MINISTERO DELLA DIFESA

DIREZIONE GENERALE DELLE COSTRUZIONI
DELLE ARMI E DEGLI ARMAMENTI
AERONAUTICI E SPAZIALI

ROMA

AA.1F-104S-4

MANUALE TECNICO
CATALOGO NOMENCLATORE ILLUSTRATO
DELLE PARTI DI RICAMBIO

VELIVOLO F-104S

LA PRESENTE PUBBLICAZIONE ANNULLA E SOSTITUISCE
IL MANUALE TECNICO AA.1F-104S-4 EMESSO IN DATA 6-1-1969

Ditta costruttrice: AERITALIA - STABILIMENTI DI TORINO
Codice del costruttore: A0019

EDIZIONE 22-7-1974

Preparato dalla AERITALIA - STABILIMENTI DI TORINO - Servizio Tecnico di Assistenza

ELENCO DELLE PAGINE VALIDE

Questa pubblicazione è complessivamente costituita da N. 1660 pagine, come da elenco seguente:

N. Pagina	Edizione/Aggiornamento (*)
Copertina	
Pagina « A »	
Pagina da i a viii	originale
Pagina da 1-1 a 1-24	originale
Pagina 1-25	originale
Pagina 1-26	in bianco
Pagina da 2-1 a 2-1162	originale
Pagina 3-1	originale
Pagina 3-2	in bianco
Pagina da 3-3 a 3-440	originale
Pagina da 4-1	originale
Pagina 4-2	originale
Pagina da 4-3 a 4-8	originale
Pagina 4-9	originale
Pagina 4-10	in bianco
Pagina da 4-11 a 4-22	originale

NOTA

(*) La parte del testo oggetto delle variazioni è indicata da una linea/tratto verticale sul margine esterno, sinistro o destro (esterno), della pagina o della colonna.

AVVERTENZA

— Questa pubblicazione è valida solamente se è composta dalle pagine sopraelencate, debitamente aggiornate.

— Tutte le pagine che siano state superate da altre aggiornate devono essere tolte dal fascicolo e distrutte.

— Copie della presente pubblicazione possono essere ottenute su richiesta, compilata secondo la P.T. AA.00-00-8, indirizzata al Ministero Difesa - COSTARMAEREO - 4° Rep. - 11ª Div. - Viale Università, 4 - 00100 ROMA.

INDICE DEL CONTENUTO

Sezione N.	Figura N.	TITOLO	Pagina N.
I		**INTRODUZIONE** *(INTRODUCTION)*	da 1-1 a 1-26
		Introduzione ed istruzioni sulla consultazione del catalogo	da 1-2 a 1-22
		Elenco costruttori, ordinato per codice	da 1-4 a 1-11
		Elenco costruttori, ordinato per nominativo	da 1-11 a 1-18
		Elenco pubblicazioni dei complessivi di subfornitura	da 1-19 a 1-21
		Indice delle abbreviazioni, delle matricole militari e delle ordinanze tecniche	da 1-21 a 1-23
		Modo di usare il catalogo nomenclatore	1-24
		Schema posizionamento stazioni	1-25
II		**ELENCAZIONE ILLUSTRATA E DESCRITTIVA** *(GROUP ASSEMBLY PARTS LIST)*	da 2-1 a 2-1162
	1	Vista generale velivolo completo *(General View of Complete Aircraft)*	2-2
		ALA *(WING)*	da 2-4 a 2-88
		ALA COMPLETA *(WING COMPLETE)*	da 2-4 a 2-7
	2	Ala, complessivo *(Complete Wing Assembly)*	2-5
		ALA, STRUTTURA *(WING STRUCTURE)*	da 2-8 a 2-44
	3	Cassone, ala complessivo *(Wing Box Assembly)*	2-9
	4	Flap bordo entrata ala e struttura, complessivo *(Leading Edge Flap and Wing Tip Structure)*	2-18
	5	Flap bordo uscita ala, alettone e struttura estremità *(Trailing Edge Flap, Aileron and Wing Tip Structure)*	2-22
	6	Attacchi ala ed elementi di fissaggio *(Wing Fitting and Attaching Parts)*	2-28
	7	Raccordi ala *(Wing Fillets)*	2-35
	8	Sportelli accesso ala *(Wing Access Covers and Doors)*	2-39
	9	Chiavistello comando flap bordo entrata *(Leading Edge Flap Latch)*	2-43
		ALA, IMPIANTO COMBUSTIBILE *(WING FUEL)*	da 2-45 a 2-48
	10	Tubazione ed equipaggiamento combustibile su ala *(Wing Fuel Piping and Equipment)*	2-46
		ALA, IMPIANTO IDRAULICO *(WING HYDRAULICS)*	da 2-49 a 2-52
	11	Servocomando alettone e tubazioni *(Aileron Servo and Piping)*	2-50
		ALA, CONTROLLO STRATO LIMITE *(WING PNEUMATICS)*	da 2-53 a 2-70
	12	Comando strato limite *(Boundary Layer Control)*	2-54
	13	Valvola, comando strato limite *(Boundary Layer Control Valve)*	2-58
	14	Rivelatore e comandi asimmetria flap bordo uscita *(Trailing Edge Flap Asymmetry Detector and Controls)*	2-62
	15	Rivelatore, asimmetria flap bordo uscita, complessivo *(Trailing Edge Flap Asymmetry Detector Assembly)*	2-68
		ALA, IMPIANTO ELETTRICO *(WING, ELECTRICAL)*	da 2-71 a 2-84
	16	Martinetti, comando flap bordo entrata e bordo uscita *(Leading and Trailing Edge Flap Actuators)*	2-72
	17	Impianto elettrico, su ala *(Wing Electrical)*	2-77
		ALA, EQUIPAGGIAMENTO *(WING EQUIPMENT)*	da 2-85 a 2-88
	18	Equipaggiamento su estremità alare *(Wing Tip Equipment)*	2-86
		PIANI DI CODA *(EMPENNAGE)*	da 2-89 a 2-124
		PIANI DI CODA, COMPLETI *(EMPENNAGE COMPLETE)*	da 2-89 a 2-90
	19	Piani di coda, complessivo *(Empennage Assembly)*	2-90
		PIANI DI CODA, STRUTTURA *(EMPENNAGE STRUCTURE)*	da 2-91 a 2-107
	20	Carenature, piani di coda *(Empennage Fillets)*	2-92
	21	Deriva, complessivo *(Complete Vertical Stabilizer Assembly)*	2-94
	22	Installazione, bordo entrata parte inferiore deriva *(Lower Vertical Stabilizer Leading Edge Installation)*	2-100

Sezione N.	Figura N.	TITOLO	Pagina N.
	23	Timone, di direzione *(Rudder Installation)*	2-103
	24	Stabilizzatore, complessivo *(Horizontal Stabilizer Complete)*	2-105
		PIANI DI CODA, COMANDI *(EMPENNAGE CONTROLS)*	da 2-108 a 2-110
	25	Comando timone di direzione, complessivo *(Rudder Servo Quadrant Assembly)*	2-109
		PIANI DI CODA, IMPIANTO IDRAULICO *(EMPENNAGE HYDRAULICS)*	da 2-111 a 2-124
	26	Impianto trimmaggio e dispositivi in deriva *(Stabilizer Actuating and Trim System)*	2-112
	27	Comandi su bordo entrata deriva *(Stabilizer Input Linkage Assembly)*	2-116
	28	Tubazioni e comandi timone di direzione *(Rudder Power Control and Piping)*	2-119
	29	Tubazioni e dispositivi in deriva *(Stabilizer Actuator and Servo Piping)*	2-123
		FUSOLIERA *(FUSELAGE)*	da 2-125 a 2-947
		FUSOLIERA, COMPLETA *(FUSELAGE COMPLETE)*	da 2-125 a 2-142
	30	Fusoliera, parte anteriore, da stazione 184 a 358 *(Fuselage Station 184 to 358 Structure Installation)*	2-126
	31	Fusoliera, parte centrale, da stazione 358 a 614 *(Fuselage Station 358 to 614 Structure Installation)*	2-133
	32	Fusoliera, parte posteriore *(Aft Fuselage Complete)*	2-139
	32A	Pinne stabilizzatrici fusoliera posteriore *(Strake Assembly Aft Fuselage)*	2-142
		FUSOLIERA, STRUTTURA *(FUSELAGE STRUCTURE)*	da 2-143 a 2-277
	33	Struttura anteriore con radome e trasduttore *(Radome, Nose Structure and Forward Angle of Attack Transducer)*	2-144
	34	Guide e supporti NASARR su parte anteriore *(Nose Section Rails and Tracks)*	2-148
	35	Chiavistelli e ganci su parte anteriore *(Nose Section Latches and Locks)*	2-150
	36	Struttura fusoliera, lato S, da stazione 184 a 255 *(Fuselage Structure, Fuselage Station 184 to 255 Left Hand)*	2-152
	37	Struttura fusoliera, lato D, da stazione 184 a 255 *(Fuselage Structure, Fuselage Station 184 to 255 Right Hand)*	2-157
	38	Struttura fusoliera, da stazione 255 a 358 *(Fuselage Structure, Fuselage Station 255 to 358)*	2-162
	39	Struttura fusoliera, da stazione 255 a 358 - continua *(Fuselage Structure, Fuselage Station 255 to 358 - Continued)*	2-168
	40	Struttura fusoliera, da stazione 358 a 614 *(Fuselage Structure, Fuselage Station 358 to 614)*	2-174
	41	Struttura fusoliera, da stazione 358 a 614 - continua *(Fuselage Structure, Fuselage Station 358 to 614 - Continued)*	2-178
	42	Struttura fusoliera, da stazione 489 a 614 *(Fuselage Structure, Fuselage Station 489 to 614)*	2-180
	43	Struttura, parte posteriore fusoliera, da stazione 614 *(Fuselage Structure, Fuselage Station 614 Aft)*	2-184
	44	Supporti ed incastellature, da stazione 358 a 422 *(External Stores Rack Recess and Supports Fuselage Station 358 to 422)*	2-188
	45	Attacchi, parte posteriore fusoliera *(Aft Section Attachments)*	2-191
	46	Sportello, accesso vano apparati elettrici *(Electrical Bay Access Door)*	2-194
	47	Sportello, accesso apparati elettronici *(Electronic Compartment Cover)*	2-198
	48	Guarnizione tenuta, sportello accesso apparati elettronici, supporti e meccanismo d'attacco *(Electronic Compartment Cover Hinge Seal, Transverse Support and Latching Mechanism)*	2-203
	49	Sportello, accesso vano munizioni e carico carburante *(Ammunition/Fuel Compartment Cover)*	2-208
	50	Sportello, accesso presa aria turbina e meccanismo di sgancio *(Ram Air Turbine Door and Release Mechanism)*	2-210
	51	Condotto presa aria motore *(Engine Air Intake Duct)*	2-215
	52	Sportello, accesso condotto presa aria motore *(Engine Air Intake Duct Access Door and Hinge Cover)*	2-223
	53	Guarnizioni condotto presa aria motore *(Engine Air Intake Duct Splitter Seal)*	2-231
	54	Sportelli per raffreddamento motore *(Engine Ground Cooling Doors)*	2-233
	55	Longherone fusoliera, da stazione 422 a 489 *(Keelson Fuselage Station 422 to 489)*	2-239
	56	Parafiamma fusoliera, da stazione 489 a 505 *(Firewall Fuselage Station 489 to 505)*	2-243
	57	Pinna ventrale, completa *(Ventral Fin Complete)*	2-246
	58	Freni di picchiata *(Speed Brakes)*	2-249
	59	Struttura dorsale e portelli accesso *(Dorsal Structure and Access Doors)*	2-254
	60	Sportelli, su parte superiore fusoliera *(Access Covers and Doors Upper Fuselage)*	2-258
	61	Sportelli, su parte inferiore fusoliera *(Access Covers and Doors Lower Fuselage)*	2-265
	62	Sportello accesso, parte inferiore abitacolo *(Cockpit Lower Access Hatch)*	2-273
		FUSOLIERA, COMANDI *(FUSELAGE CONTROLS)*	da 2-278 a 2-282
	63	Comandi in fusoliera *(Fuselage Controls Complete)*	2-279
		COMANDI DI VOLO *(FLIGHT CONTROLS)*	da 2-283 a 2-355
	64	Pedaliera per comando freni e timone *(Rudder and Brake Pedals)*	2-284
	65	Pedaliera per comando freni e timone, complessivo *(Rudder and Brake Pedals Assembly)*	2-289
	66	Comandi timone in fusoliera, da stazione 200 a 614 *(Rudder Controls Fuselage Station 200 to 614)*	2-292

Sezione N.	Figura N.	TITOLO	Pagina N.
	67	Comandi timone, fusoliera posteriore, stazione 614 *(Rudder Controls Fuselage Station 614 Aft)*	2-295
	68	Comando alettoni in abitacolo *(Cockpit Aileron Control)*	2-297
	69	Meccanismo e dispositivo sensibilità barra di comando *(Control Stick Pushrods and Centering Mechanism)*	2-301
	70	Limitatore corsa alettone *(Aileron Travel Limiter)*	2-305
	71	Governale di comando *(Pilot's Control Stick and Grip Assembly)*	2-307
	72	Comandi alettoni in fusoliera, da stazione 184 a 505 *(Aileron Controls Fuselage Station 184 to 505)*	2-309
	73	Meccanismo servocomando alettoni *(Aileron Servo Actuating Mechanism)*	2-313
	74	Meccanismo per comando trim alettone *(Aileron Trim Actuating Mechanism)*	2-318
	75	Comandi stabilizzatore *(Stabilizer Controls)*	2-322
	76	Aste e bilancieri per comando stabilizzatore *(Stabilizer Control Walking Beam and Disconnect Rods)*	2-325
	77	Staffe con pulegge per comandi di volo in fusoliera, stazione 505 *(Rudder, Aileron and Elevator Pulley Bracket Assemblies Fuselage Station 505)*	2-328
	78	Comandi manetta gas e flap *(Throttle and Flap Controls)*	2-332
	79	Staffe e cavi per comando manetta gas, in fusoliera, da stazione 206 a 255 *(Throttle Control Cables and Brakets Fuselage Station 206 to 255)*	2-336
	80	Staffe e cavi per comando manetta gas in fusoliera, da stazione 255 a 364 *(Throttle Control Cables and Brackets Fuselage Station 255 to 364)*	2-339
	81	Staffe e cavi per comando manetta gas in fusoliera, stazione 364 *(Throttle Control Cables and Brachets Fuselage Station 364 Aft)*	2-342
	82	Comando posteriore manetta gas, complessivo *(Aft Throttle Control Assembly)*	2-346
	83	Staffe per pulegge comandi di volo in fusoliera, stazioni 209, 249 e 258 *(Flight Controls Pulley Bracket Assemblies Fuselage Stations 209, 249 and 258)*	2-348
	84	Leve e sedi comandi di volo in fusoliera, stazione 335 *(Flight Controls Tunnel and Bellcrank Assemblies Fuselage Station 335)*	2-351
		COMANDI MANUALI DI SGANCIO *(MANUAL RELEASE CONTROLS)*	da 2-356 a 2-396
	85	Meccanismo emergenza sgancio per organi di atterramento in fusoliera, da stazione 206 a 279 *(Nose and Main Landing Gear Emergency Release Fuselage Station 206 to 279)*	2-357
	86	Leve per comando emergenza organi di atterramento, complessivo *(Nose and Main Landing Gear Emergency Release Bellcrank Assembly)*	2-360
	87	Meccanismo emergenza sgancio carrello principale in fusoliera, da stazione 279 a 422 *(Main Landing Gear Emergency Release Fuselage Station 279 to 422)*	2-363
	88	Meccanismo emergenza sgancio carrello principale in fusoliera, da stazione 422 a 473 *(Main Landing Gear Emergency Release Fuselage Station 422 to 473)*	2-367
	89	Comando sgancio manuale per sportellone presa aria *(Ram Air Turbine Door Manual Release)*	2-373
	90	Comando sgancio paracadute freno in fusoliera, da stazione 184 a 255 *(Drag Chute Release Fuselage Station 184 to 255)*	2-377
	91	Comando sgancio paracadute freno in fusoliera, da stazione 255 a 340 *(Drag Chute Release Fuselage Station 255 to 340)*	2-380
	92	Comando sgancio paracadute freno in fusoliera, da stazione 340 a 497 *(Drag Chute Release Fuselage Station 340 to 497)*	2-383
	93	Comando paracadute freno e gancio d'arresto in fusoliera, da stazione 497 a 614 *(Drag Chute and Arrestor Hook Release Fuselage Station 497 to 614)*	2-386
	94	Comando sgancio paracadute freno parte posteriore fusoliera, stazione 614 *(Drag Chute Release Fuselage Station 614 Aft)*	2-391
	95	Meccanismo sgancio ugello di scarico *(Engine Exhaust Nozzle Release Mechanism)*	2-394
		IMPIANTO COMBUSTIBILE *(FUSELAGE FUEL)*	da 2-396 a 2-474
	96	Bocchettone per rifornimento e drenaggio *(Single Point Refueling Adapter and Drain)*	2-398
	97	Serbatoio carburante vano munizioni *(Ammunition Compartment Fuel Tank)*	2-400
	98	Vano serbatoio ausiliare carburante e collegamenti *(Case Stowage Compartment Auxiliary Fuel Tank and Attachments)*	2-406
	99	Serbatoio carburante vano cannone *(Gun Bay Fuel Tank)*	2-411
	100	Tubazioni ed accessori serbatoio ausiliare carburante *(Auxiliary Fuel Tank Piping and Equipment)*	2-417
	101	Collegamenti serbatoio ausiliare carburante *(Auxiliary Fuel Tank Attachments)*	2-422
	102	Tubazioni ed accessori serbatoio anteriore principale carburante *(Forward Main Fuel Tank Internal Piping and Equipment)*	2-427
	103	Sportello d'ispezione serbatoio anteriore principale carburante *(Forward Main Fuel Tank Manhole Cover)*	2-433
	104	Collegamenti serbatoio anteriore principale carburante *(Forward Main Fuel Tank Attachments)*	2-435
	105	Serbatoi principali carburante *(Left Hand, Right Hand and Center Aft Main Fuel Tanks)*	2-440
	106	Coperchio ed accessori serbatoio principale carburante centrale posteriore *(Center Aft Main Fuel Tank Cover and Equipment)*	2-445
	107	Collegamenti serbatoio principale carburante sinistro e destro posteriore *(Left Hand and Right Hand Aft Main Fuel Tank Attachments)*	2-447
	108	Collegamenti serbatoio principale carburante centrale posteriore *(Center Aft Main Fuel Tank Attachments)*	2-449
	109	Tubazioni carburante in fusoliera, da stazione 358 a 422 *(Fuel Tanks External Piping Fuselage Station 358 to 422)*	2-452

Sezione N.	Figura N.	TITOLO	Pagina N.
	110	Tubazioni carburante in fusoliera, da stazione 422 a 489 *(Fuel Tanks External Piping Fuselage Station 422 to 489)*	2-455
	111	Tubazioni carburante in fusoliera, da stazione 489 a 505 *(Fuel Transfer Piping Fuselage Station 489 to 505)*	2-458
	112	Valvola principale d'alimentazione carburante, filtro e tubazioni *(Main Fuel Feed Shutoff Valve, Strainer and Piping)*	2-464
	113	Regolatore di pressione carburante e tubazioni *(Fuel Transfer Pressure Regulator and Piping)*	2-468
		IMPIANTO IDRAULICO *(FUSELAGE HYDRAULICS)*	da 2-475 a 2-573
	114	Tubazioni ed accessori impianto idraulico in fusoliera, da stazione 184 a 614 *(Fuselage Station 184 to 614 Hydraulic Piping and Equipment Complete)*	2-476
	115	Serbatoio idraulico per freni, valvole e tubazioni in fusoliera, da stazione 184 a 255 *(Brake Reservoir, Valves and Piping Fuselage Station 184 to 255)*	2-478
	116	Tubazioni ed accessori vano ruota anteriore in fusoliera, da stazione 255 a 305 *(Nose Wheel Well Piping and Equipment Fuselage Station 255 to 305)*	2-481
	117	Installazione tubazioni in fusoliera, da stazione 305 a 422 *(Fuselage Station 305 to 422 Plumbing Installations)*	2-488
	118	Tubazioni ed accessori vano ruota principale in fusoliera, da stazione 422 a 465, lato sinistro *(Main Wheel Piping and Equipment Fuselage Station 422 to 465 Left Hand)*	2-493
	119	Tubazioni ed accessori vano ruota principale in fusoliera, da stazione 465 a 489, lato sinistro *(Main Wheel Well Piping and Equipment Fuselage Station 465 to 489 Left Hand)*	2-498
	120	Tubazioni ed accessori vano ruota principale in fusoliera, da stazione 422 a 465, lato destro *(Main Wheel Well Piping and Equipment Fuselage Station 422 to 465 Right Hand)*	2-504
	121	Tubazioni ed accessori vano ruota principale in fusoliera da stazione 465 a 489, lato destro *(Main Wheel Well Piping and Equipment Fuselage Station 465 to 489 Right Hand)*	2-510
	122	Tubazioni ed accessori vano motore in fusoliera da stazione 489 a 579, lato sinistro *(Engine Compartment Piping and Equipment Fuselage Station 489 to 579 Left Hand)*	2-516
	123	Tubazioni ed accessori vano motore in fusoliera, da stazione 489 a 539, lato destro *(Engine Compartment Piping and Equipment Fuselage Station 489 to 539 Right Hand)*	2-523
	123A	Tubazioni ed accessori vano motore in fusoliera, da stazione 489 a 600, lato sinistro *(Engine Compartment Piping and Equipment Fuselage Station 489 to 600 Left Hand)*	2-530
	124	Tubazioni ed accessori vano motore in fusoliera, da stazione 539 a 600, lato destro *(Engine Compartment Piping and Equipment Fuselage Station 539 to 600 Right Hand)*	2-533
	124A	Tubazioni ed accessori vano motore in fusoliera da stazione 489 a 600, lato destro *(Engine Compartment Piping and Equipment Fuselage Station 489 to 600 Right Hand)*	2-538
	125	Tubazioni deflettori aria motore *(Engine Air Bypass Flaps Piping)*	2-542
	126	Tubazioni ed accessori per azionatori freni di picchiata *(Speed Brakes Actuating Piping and Equipment)*	2-547
	127	Tubazioni d'emergenza idraulica e presa aria turbina *(Ram Air Turbine and Emergency Hydraulic Piping)*	2-549
	128	Pannello di servizio idraulico a terra *(Hydraulic Ground Service Panel)*	2-553
	129	Chiavistelli e cerniere per sportello accesso impianto idraulico *(Hydraulic Access Door Hinges and Latches)*	2-557
	130	Guarnizioni e struttura sportello accesso impianto idraulico *(Hydraulic Access Door Seals and Structure)*	2-562
	131	Tubazioni e parti orientabili su pannello impianto idraulico *(Hydraulic Panel Swivels and Piping)*	2-565
	132	Accessori pannello impianto idraulico *(Hydraulic Panel Equipment)*	2-568
		TUBO PITOT ED IMPIANTO STATICO *(PITOT AND STATIC)*	da 2-574 a 2-585
	133	Tubazioni ed accessori impianto statico e tubo Pitot in fusoliera, stazione 184 *(Pitot and Static Piping and Equipment Fuselage Station 184 Forward)*	2-575
	134	Tubazioni ed accessori impianto statico e tubo Pitot in fusoliera, da stazione 184 a 206 *(Pitot and Static Piping and Equipment Fuselage Station 184 to 206)*	2-579
	135	Vano elettronico ed accessori tubo Pitot in fusoliera stazione 206 *(Pitot Equipment and Electronic Compartment Fuselage Station 206 Aft)*	2-583
		IMPIANTO OSSIGENO (OXYGEN)	da 2-586 a 2-591
	136	Tubazioni ed accessori ossigeno liquido *(Liquid Oxygen Piping and Equipment)*	2-587
		IMPIANTO CONDIZIONAMENTO E PRESSURIZZAZIONE *(AIR CONDITIONING AND PRESSURIZATION)*	da 2-592 a 2-659
	137	Impianto raffreddamento RADAR *(Radar Cooling)*	2-593
	138	Impianto pressurizzazione RADAR e tubazioni *(Radar Pressurization and Piping)*	2-595
	139	Impianto pressurizzazione tettuccio e vano elettronico *(Canopy and Electronic Compartment Cover Seal Pressurization Tubing and Equipment)*	2-598

Sezione N.	Figura N.	TITOLO	Pagina N.
	140	Valvola anti-G e tubazioni in fusoliera, da stazione 237 a 255 *(Anti-G Valve and Piping Fuselage Station 237 to 255)*	2-600
	141	Impianto sbrinamento parabrezza e tettuccio *(Windshield and Canopy Defogging)*	2-602
	142	Condotti aria abitacolo *(Cockpit Air Ducts)*	2-607
	143	Impianto sbrinamento vano elettronico *(Electronic Compartment Defogging)*	2-610
	144	Separatore aria-acqua cabina *(Cabin Air Water Separator)*	2-612
	145	Impianto pressurizzazione aria cabina e vano elettronico in fusoliera, da stazione 195 a 284 *(Cabin Air and Electronic Compartment Pressurization Piping and Equipment Fuselage Station 195 to 284)*	2-616
	146	Impianto pressurizzazione aria cabina e vano elettronico in fusoliera, stazione 284 *(Cabin Air and Electronic Compartment Pressurization Piping and Equipment Fuselage Station 284 Aft)*	2-620
	147	Tubazioni ed accessori sfiato cannone *(Gun Purge Piping and Equipment)*	2-624
	148	Condotti ed accessori sfiato cannone *(Gun Purge Ducts and Equipment)*	2-630
	149	Condotti ed attacchi per rimozione pioggia in fusoliera, da stazione 184 a 255 *(Rain Removal Ducts and Fittings Fuselage Station 184 to 255)*	2-635
	150	Condotti ed attacchi per rimozione pioggia in fusoliera, da stazione 255 a 310 *(Rain Removal Ducts and Fittings Fuselage Station 255 to 310)*	2-638
	151	Condotti per refrigerazione e raffreddamento presa aria *(Refrigerator Ram Air and Cooling Ducts)*	2-640
	152	Condotti sfiato aria in fusoliera, da stazione 310 a 520 *(Dorsal Bleed Air Ducts Fuselage Station 310 to 520)*	2-646
	153	Condotti sfiato aria motore in fusoliera, da stazione 520 a 572 *(Engine Bleed Air Ducts Fuselage Station 520 to 572)*	2-651
	154	Apparato condizionamento aria *(Air Conditioning Package)*	2-655
	155	Supporti e sostegno oscillante per apparato condizionamento aria *(Air Conditioning Package Supports and Sway Brace)*	2-657
	155A	Impianto tubazioni raffreddamento compartimento elettronica *(Electronic compartment cooling piping)*	2-659
		IMPIANTO ELETTRICO ED ELETTRONICO *(FUSELAGE ELECTRICAL AND ELECTRONICS)*	da 2-660 a 2-850
	156	Impianto elettrico ed elettronico su parte anteriore fusoliera *(Forward Fuselage Electrical and Electronics)*	2-661
	157	Apparati NASARR in prua *(Nose NASARR Components)*	2-666
	158	Impianto elettrico in prua *(Nose Electrical)*	2-669
	159	Impianto elettrico - abitacolo lato sinistro *(Cockpit Electrical Left Hand)*	2-671
	160	Impianto elettrico - abitacolo lato destro *(Cockpit Electrical Right Hand)*	2-679
	161	Impianto elettrico - cruscotto principale *(Main Instrument Panel Electrical)*	2-688
	162	Impianto elettrico - cruscotto inferiore *(Lower Instrument Panel Electrical)*	2-692
	163	Impianto elettrico ed elettronico in abitacolo *(Cockpit Electrical and Electronics)*	2-695
	164	Impianto illuminazione abitacolo *(Cockpit Lights)*	2-700
	165	Relé emergenza IFF/SIF e quadretti Dual Timer ed extra Timer *(Emergency Auto IFF/SIF Relay Dual and extra Timer Panels)*	2-704
	166	Pannelli interruttori automatici su lato sinistro abitacolo *(Left Hand Cockpit Circuit Breaker Panels)*	2-707
	167	Quadretto di comando TRIM direzionale, TRIM stabilizzatore, interruttori TRIM ausiliare e sportelli presa aria motore *(Directional Trim and Stability Control Panel and Auxiliary Trim Control Switches and Control Engine Air Inlet Doors)*	2-711
	168	Quadretto comando illuminazione *(Lighting Control Panel)*	2-714
	169	Quadretto di controllo pressione ossigeno tuta anti-G, riscaldamento visiera elmetto e comando cursore a distanza *(Edge Lighted Cursor Range and Face Plate Control and Pressure Suit Oxygen Panel)*	2-716
	170	Quadretto comando carburante *(Fuel Control Panel)*	2-718
	171	Pannello interruttori automatici su lato destro abitacolo *(Right Hand Cockpit Circuit Breaker Panel)*	2-720
	172	Centralina C.A. - Struttura ed accessori pannello superiore relé *(Electrical Load Center Top Relay Panel Structure and Equipment)*	2-722
	173	Centralina C.A. - Accessori pannello posteriore *(Electrical Load Center Back Panel Equipment)*	2-726
	174	Accessori comando centralina d'alimentazione e installazione guide d'onda *(Electrical Load Center Control Equipment and Rack and Vave Guide Installation)*	2-736
	175	Centralina C.A. - Pannello principale interruttori automatici *(Electrical Load Center Door Panel)*	2-744
	176	Vano elettronico - apparecchiature sullo sportellone *(Electronic Compartment Cover Equipment)*	2-747
	177	Quadretto interruttori su lato destro abitacolo *(Right Hand Cockpit Switch Panel)*	2-752
	178	Vano elettronico - apparecchiature su lato sinistro *(Electronic Compartment Equipment Left Hand)*	2-754
	179	Vano elettronico - apparecchiature su incastellatura a terra *(Electronic Compartment Rack Equipment)*	2-760
	180	Vano elettronico - Impianto elettrico su lato destro *(Electronic Compartment Equipment Right Hand)*	2-763
	181	Vano posteriore accessori elettronici *(Electronic Compartment Equipment Aft)*	2-765
	182	Scatola di giunzione vano elettronico *(Electronic Compartment Junction Box)*	2-767
	183	Vano elettronico - incastellatura a terra *(Electronic Compartment Rack)*	2-775
	184	Impianto elettrico vano cannone *(Gun Bay Electrical)*	2-785
	185	Impianto elettrico vano cannone *(Gun Compartment Electrical)*	2-791
	186	Impianto elettrico su rastremazioni alari *(Wing Fillets Electrical)*	2-795

Sezione N.	Figura N.	TITOLO	Pagina N.
	187	Impianto elettrico vano ruota carrello anteriore *(Nose Wheel Well Electrical)*	2-800
	188	Impianto elettrico vano ruota carrello principale e misuratore di fatica *(Main Wheel Well Electrical and fatigue meter)*	2-802
	189	Impianto elettrico fusoliera, da stazione 310 a 505 *(Fuselage Electrical Fuselage Station 310 to 505)*	2-809
	190	Impianto elettrico carichi esterni *(External Stores Electrical)*	2-813
	191	Impianto elettrico anti-ghiaccio, condotto presa aria motore *(Engine Air Scoop Duct Anti-icing Electrical)*	2-815
	192	Impianto elettrico su lato sinistro fusoliera, da stazione 358 a 614 *(Left Hand Electrical Fuselage Station 358 to 614)*	2-817
	193	Impianto elettrico su parte centrale fusoliera, da stazione 358 a 614 *(Center Fuselage Electrical Fuselage Station 358 to 614)*	2-822
	194	Impianto elettrico su lato destro fusoliera, da stazione 358 a 614 *(Right Hand Electrical Fuselage Station 358 to 614)*	2-827
	195	Presa esterna d'alimentazione *(External Power Receptacle)*	2-830
	196	Avvisatori d'incendio *(Fire Warning Detectors)*	2-835
	197	Impianto elettrico su parte posteriore fusoliera ed antenne di presintonizzazione missile AIM-7E *(Aft Fuselage Electrical and Signal Horn Antennas)*	2-841
	198	Luci esterne *(External Lights)*	2-844
	199	Faro di rullaggio e di atterraggio *(Landing and Taxiing Lights)*	2-850
		ANTENNE *(ANTENNAS)*	da 2-851 a 2-855
	200	Antenna UHF ed IFF su pinna dorsale *(UHF and IFF Dorsal Fin Antennas)*	2-852
	201	Antenne UHF, RCVR-XMTR ed antenna TACAN su pinna ventrale *(TACAN, UHF, RCVR-XMTR and Ventral Fin Antennas)*	2-854
		PARABREZZA E TETTUCCIO *(WINDSHIELD AND CANOPY)*	da 2-856 a 2-897
	202	Parabrezza *(Windshield)*	2-857
	203	Tettuccio *(Canopy)*	2-861
	204	Comando chiavistello tettuccio *(Canopy Latch Mechanism)*	2-865
	205	Chiavistello tettuccio, complessivo *(Canopy Latch Assemblies)*	2-869
	206	Maniglie sgancio tettuccio *(Canopy Release Handles)*	2-871
	207	Comando sgancio cerniera tettuccio *(Canopy Hinge Release Mechanism)*	2-873
	208	Comando sgancio tettuccio in fusoliera, stazione 255 *(Canopy Release Mechanism Fuselage Station 255)*	2-877
	209	Supporti e morsetti comando apertura tettuccio *(Canopy Supports and Hold Open Mechanism)*	2-884
	210	Impianto sgancio emergenza eiezione tettuccio *(Canopy Emergency Jettison Pyrotechnics and Piping)*	2-888
	211	Maniglie e cavi, comando emergenza eiezione tettuccio *(Canopy Emergency Jettison Handles and Cables)*	2-894
		SEGGIOLINO EIETTABILE ED EQUIPAGGIAMENTO DI SOPRAVVIVENZA *(EJECTION SEAT AND SURVIVAL EQUIPMENT)*	da 2-898 a 2-903
	212	Seggiolino eiettabile e guide *(Election Seat and Rails)*	2-899
	213	Cartucce eiezione tettuccio e pacco di sopravvivenza *(Ejection Seat Pyrotechnics and Survival Kits)*	2-903
		EQUIPAGGIAMENTO ABITACOLO *(COCKPIT SECTION EQUIPMENT)*	da 2-904 a 2-916
	214	Accessori ed arredamento abitacolo *(Cockpit Furnishing and Equipment)*	2-905
	215	Rivestimenti isolanti e pannelli trim, abitacolo, lato sinistro *(Cockpit Trim Panels and Insulating Blankets Left Hand)*	2-907
	216	Rivestimenti isolanti e pannelli trim, abitacolo, lato destro *(Cockpit Trim Panels and Insulating Blankets Right Hand)*	2-910
	217	Vano comando regolazione combustibile ed ipersostentatori *(Throttle and Flap Control Housing)*	2-914
		PANNELLI STRUMENTI *(INSTRUMENT PANELS)*	da 2-917 a 2-948
	218	Cruscotto inferiore, lato sinistro *(Left Hand Sub Instrument Panel)*	2-918
	219	Cappottina antiriflessi, cruscotto principale e parapolvere *(Main Instrument Panel Glare Shield, Structure and Dust Cover)*	2-922
	220	Strumenti cruscotto principale *(Main Instrument Panel Components)*	2-928
	221	Cruscotto inferiore e telaio centrale *(Lower Instrument Panel Center Stand Structure)*	2-936
	222	Strumenti cruscotto inferiore *(Lower Instrument Panel Components)*	2-940
	223	Pannello comando carichi speciali *(Special Weapon Control Panel)*	2-945
	224	Cruscotto inferiore lato destro *(Right Hand Sub Instrument Panel)*	2-947
		ARMAMENTO *(ARMAMENT)*	da 2-949 a 2-982
	225	Sportello vano armamento/carburante *(Armament/Fuel Compartment Doors)*	2-950
	226	Tubo di scoppio, supporti e mirino *(Blast Tube, Fixed Mounts and Boresight)*	2-954
	227	Collimatore ed impianto elettrico su parabrezza *(Gunsight and Winshield Electrical)*	2-961
	228	Cannone automatico, morsetti e supporto regolabile posteriore *(Automatic Gun, Yoke and Adjustable Aft Mount)*	2-966
	229	Scatola munizioni, sportello e condotto flessibile maglioni e bossoli *(Ammunition Can, Cover Booster and Feed Chutes)*	2-970

Sezione N.	Figura N.	TITOLO	Pagina N.
	230	Contenitore bossoli e maglioni di scarico *(Gun Debris Container and Ejection Chutes)*	2-973
	231	Accessori varii e carichi esterni su montanti alari *(Wing Pylon External Stores Miscellaneous Equipment)*	2-982
		ORGANI DI ATTERRAMENTO *(LANDING GEAR)*	da 2-983 a 2-1028
		CARRELLO ANTERIORE *(NOSE LANDING GEAR)*	da 2-983 a 2-1001
	232	Carrello anteriore *(Nose Landing Gear Complete)*	2-984
	233	Gamba carrello anteriore *(Nose Landing Gear Drag Strut)*	2-990
	234	Sportelli e martinetti carrello anteriore *(Nose Landing Gear Doors and Actuating Mechanism)*	2-992
	235	Comando ruotino carrello anteriore in fusoliera, da stazione 205 a 270 *(Nose Landing Gear Steering Controls Fuselage Station 205 to 270)*	2-996
	236	Comando ruotino carrello anteriore in fusoliera, da stazione 270 a 310 *(Nose Landing Gear Steering Controls Fuselage Station 270 to 310)*	2-1001
		CARRELLO PRINCIPALE *(MAIN LANDING GEAR)*	da 2-1002 a 2-1028
	237	Carrello principale *(Main Landing Gear Complete)*	2-1003
	238	Gamba carrello principale *(Main Landing Gear Drag Strut)*	2-1008
	239	Sportelli anteriori carrello principale *(Main Landing Gear Forwards Doors)*	2-1014
	240	Sportelli posteriori carrello principale *(Main Landing Gear Aft Doors)*	2-1020
	241	Martinetti per sportelli carrello principale *(Main Landing Gear Doors Actuating Mechanism)*	2-1024
	242	Chiavistelli bloccaggio sportello carrello principale *(Main Landing Gear Door Mechanism Latches)*	2-1028
		GRUPPO MOTOPROPULSORE *(POWER PLANT)*	da 2-1029 a 2-1073
	243	Gruppo motopropulsore *(Power Plant)*	2-1030
	244	Impianto elettrico gruppo motopropulsore *(Power Plant Electrical)*	2-1033
	245	Tubazioni gruppo motopropulsore *(Power Plant Plumbing)*	2-1036
	246	Tubazioni drenaggio gruppo motopropulsore *(Power Plant Drains)*	2-1041
	247	Condotti perdite su 17° stadio *(17th Stage Seal Leakage Air Ducts)*	2-1046
	248	Indicatore ed avvisatore quantità olio motore nel serbatoio *(Engine Oil Tank Dipstick and Nucleonic Oil Quantity Detector)*	2-1048
	249	Trasmettitore olio motore *(Engine Oil Transmitter)*	2-1051
	250	Pompa a mano per travaso olio motore nel serbatoio *(Engine Oil Tank Hand Pump)*	2-1055
	251	Supporti gruppo motopropulsore *(Power Plant Mounts)*	2-1057
	252	Rotaie di guida per gruppo motopropulsore *(Power Plant Guide Rail)*	2-1061
	253	Condotti aria per raffreddamento generatore e starter *(Generator Cooling and Ground Starter Air Ducts)*	2-1064
	254	Struttura e deflettori aria motore *(Engine Air Bypass Flaps and Structure)*	2-1071
		EQUIPAGGIAMENTO PER DECELERAZIONE *(DECELERATION EQUIPMENT)*	da 2-1074 a 2-1093
	255	Sportello paracadute freno *(Drag Chute Door)*	2-1075
	256	Gancio paracadute freno *(Drag Chute Hook)*	2-1079
	257	Comando sgancio paracadute freno *(Drag Chute Mechanism)*	2-1083
	258	Paracadute freno *(Deceleration Parachute)*	2-1088
	259	Gancio d'arresto *(Arrestor Hook)*	2-1091
		EQUIPAGGIAMENTO A CORREDO *(LOOSE EQUIPMENT)*	da 2-1094 a 2-1137
	260	Equipaggiamento a corredo e pubblicazioni *(Loose Equipment and Technical Data)*	2-1095
	261	Spine e bandierine di sicurezza *(Aircraft Safety Flags, Streamers and Pins)*	2-1101
	262	Copertine velivolo *(Aircraft Covers)*	2-1107
	263	Montante alare *(Pylon)*	2-1112
	264	Impianto elettrico su montante alare *(BL 104 Wing Pylon Electrical)*	2-1118
	265	Kit di conversione per installazione montante in fusoliera *(BL 22 Fuselage Pylon Conversion Kit)*	2-1122
	266	Impianto elettrico su montante *(BL 22 Pylon Electrical)*	2-1127
	267	Kit di conversione per installazione montante alare *(BL 104 Pylon AIM-9/B Conversion Kit)*	2-1131
	268	Impianto elettrico per adattatore *(AIM-9/B Adapter Electrical)*	2-1137
		RIEPILOGO IMPIANTI E COMANDI *(SYSTEMS)*	da 2-1140 a 2-1162
	269	Impianto comandi sgancio manuale *(Manual Release Controls System)*	2-1140
	270	Impianto carburante *(Fuel System)*	2-1142
	271	Impianto idraulico *(Hydraulic System)*	2-1144
	272	Impianto elettrico *(Electrical System)*	2-1146
	273	Impianto elettronico *(Electronic System)*	2-1148
	274	Impianto NASARR - R21G *(R 21G NASARR System)*	2-1149
	275	Impianto armamento *(Armament System)*	2-1150
	276	Impianto comando automatico smorzatore di beccheggio *(Automatic Pitch Control System)*	2-1151
	277	Impianto navigazione *(Inertial Navigation System)*	2-1152
	278	Impianto TACAN *(TACAN System)*	2-1153
	279	Impianto di navigazione PHI e impianto giroscopico C2G *(PHI Navigation and C2G Standby Gyrosyn Compass System)*	2-1154

Sezione N.	Figura N.	TITOLO	Pagina N.
	280	Impianto Radio UHF *(UHF Communication System)*	2-1155
	281	Impianto radar IFF *(IFF Radar System)*	2-1156
	282	Impianto avvisatori d'incendio *(Fire Detector System)*	2-1157
	283	Impianto condizionamento aria *(Air Conditioning System)*	2-1158
	284	Impianto comandi di volo *(Flight Controls System)*	2-1160
	285	Impianto autopilota e correttore di stabilità *(Stability Augmentation and Autopilot System)*	2-1162
III		**INDICE NUMERICO** *(NUMERICAL INDEX)*	da 3-1 a 3-440
IV		**INDICE DEI RIFERIMENTI SCHEMATICI** *(REFERENCE DESIGNATION INDEX)*	da 4-1 a 4-22
		CONNETTORI DI INTERCOLLEGAMENTO	da 4-1 a 4-8
	286	Posizionamento connettori	4-2
		SIGLE ELETTRICHE DEGLI ARTICOLI	da 4-9 a 4-22

SEZIONE I

INTRODUZIONE

SEZIONE I

1. Introduzione ed istruzioni sulla consultazione del catalogo.

1.2. Questo catalogo nomenclatore illustrato descrive le parti di ricambio riguardanti il velivolo F-104S costruito dalla Ditta AERITALIA - Stab. di Torino, su licenza della Ditta LOCKHEED CALIFORNIA Co. - Burbank, Calif. - U.S.A.
Le informazioni fornite sono utilizzabili per scopi logistici e per facilitare l'identificazione delle parti necessarie per la manutenzione presso Enti utilizzatori e di manutenzione e, per le riparazioni, presso Enti e Ditte riparatrici.
Esse permettono l'identificazione, l'immagazzinamento e la distribuzione delle parti presso gli Enti logistici, nonchè le operazioni di acquisto delle parti stesse presso le Ditte produttrici da parte degli Enti responsabili degli approvvigionamenti.

1.3. La disposizione delle parti illustrate si riferisce alla loro reciproca relazione nelle fasi di smontaggio e rimontaggio dei complessivi.

1.3.1. Per ulteriori informazioni tecniche riguardanti le istruzioni operative, di manutenzione, ispezioni e riparazione dell'equipaggiamento oggetto della presente pubblicazione, il personale interessato dovrà riferirsi alle seguenti pubblicazioni della stessa serie:

AA.1F-104S-1
AA.1F-104S-2
AA.1F-104S-3

2. Lista delle parti di ricambio ed illustrazioni (Riferimento alla Sez. II).

2.1. La disposizione delle figure delle parti di ricambio è stata impostata secondo la sequenza delle operazioni di scomposizione dei subcomplessivi dei complessivi principali, fino al dettaglio delle singole parti componenti.
Ogni complessivo principale è stato illustrato con figure a se stanti, con l'elencazione delle rispettive parti di ricambio, in ordine di scomposizione. Le parti non ulteriormente scomposte o non elencate in dettaglio non sono da considerarsi normali pezzi di ricambio e, per tale motivo, non sono state illustrate anche al fine di evitare erronei approvvigionamenti. Nei pochi casi in cui sia risultato necessario illustrare ed elencare anche parti non procurabili, le stesse sono state affiancate nella colonna « Quantità » dall'annotazione « NP » che significa « non procurabile ». Altre parti, per necessità di concatenamento del testo e delle illustrazioni, sono state invece indicate con l'annotazione « REF » che sta ad indicare che esse sono state riportate solo per riferimento. La loro quantità di approvvigionamento risulta dalla figura di rimando indicata tra parentesi dopo la denominazione.

2.2. Elencazione.

L'elencazione è disposta nelle seguenti colonne:

2.2.1. Colonna « **Figura e particolare** ». Include il numero della figura e i numeri di riferimento delle parti di ricambio illustrate nella figura stessa.

2.2.2. Colonna « **Numero di Riferimento (NDR)** ». Include i numeri assegnati alle parti di ricambio dalle Ditte, da indicare nelle richieste di approvvigionamento.
Per i numeri riguardanti voci modificate, occorre assumere informazioni nella serie delle pubblicazioni tecniche/modifiche indicate in calce al testo delle figure.

2.2.3. Colonna « **Denominazione** ». Include la denominazione delle parti, nel modo più conciso, con l'aggiunta, quando sia il caso, di informazioni di intercambiabilità o di modifica e, per complessivi particolari, anche il numero della relativa pubblicazione tecnica.

2.2.4. Colonna « **Quantitativo** ». Include il numero indicante il quantitativo di ogni voce illustrata nella figura a cui si riferisce l'elencazione. Se in luogo del quantitativo è indicata la sigla « NP », tale voce non è procurabile. Se invece è indicata la sigla « REF » la quantità di tale voce va ricercata nella figura indicata tra parentesi dopo la denominazione. La sigla « AR » (a richiesta) sta ad indicare che la quantità di quell'articolo va stabilita di volta in volta, secondo le esigenze di montaggio.

2.2.5. Colonna « **Codice di applicabilità** ». Include i codici assegnati alle serie di produzione aventi diversa configurazione e differenti NDR.

2.2.6. Eventuali correzioni, variazioni od aggiunte effettuate nel testo del catalogo dopo l'edizione iniziale, sono indicate da una barretta nera verticale disposta sul bordo esterno a fianco della o delle voci interessate. I NDR, pur rimanendo inclusi nel testo, portano l'indicazione della pubblicazione che interessa la modifica.

3. Indice dei « Numeri di Riferimento (NDR) » (Riferimento alla Sez. III).

3.1. L'indice dei NDR è compilato in accordo col sistema alfa-numerico. In questo sistema la sequenza dei NDR è disposta in modo che l'ordine di precedenza dei componenti del numero sia il seguente:

— **prima posizione:** lettere da A a Z - numeri da 0 a 9;
— **seconda posizione e successive**: spazio bianco - diagonale (barra) - punto - linea - lettere da A a Z.

3.1.1. I NDR preceduti da un asterisco (*) si riferiscono a parti modificate, per le quali occorre rilevare le informazioni nel testo della Sezione II, riferendosi alla rispettiva figura.

3.2. Le varie colonne comprendono le seguenti informazioni:

3.2.1. Colonna « **N° di Riferimento (NDR)** » (come da precedente paragrafo 2.2.2.).

3.2.2. Colonna « **Figura e particolare** » (come da precedente paragrafo 2.2.1.).

3.2.3. Colonna « **N° di Codificazione (NDC)** ». Include, a titolo informativo, tutti i NDC assegnati alle parti di ricambio nella codificazione logistica militare, conosciuti dal compilatore al momento dell'edizione del Catalogo. Le voci prive di NDC non sono ancora state codificate od hanno in corso la relativa azione di codificazione.

Attenzione - Per più dettagliate e sicure informazioni ufficiali sulla validità dei NDC elencati, occorre riferirsi alle apposite pubblicazioni logistiche ufficiali.

3.2.4. Colonna « **Codice di Utilizzazione** ». Questa colonna è suddivisa in tre colonne nelle quali sono inclusi i seguenti codici, col significato a fianco indicato:

1. Da utilizzare essenzialmente presso Ente di manutenzione;
2. Da utilizzare essenzialmente presso Ente di riparazione;
3. Voce elencata solamente per esigenze descrittive, normalmente non fornibile. Non è consigliato l'approvvigionamento per l'immagazzinamento di scorte.

Le « X » inserite nelle varie colonne indicano la pertinenza delle informazioni cui si riferiscono le colonne stesse. Se la « X » è inclusa in più colonne, significa che il pezzo è utilizzabile ai vari livelli indicati.

NOTA - Secondo le direttive impartite da COSTARMAEREO:

a) le voci indicate nella colonna 1 si riferiscono essenzialmente a gruppi, complessivi e parti per i quali un Reparto d'impiego può effettuare la sostituzione senza particolari attrezzature e col personale tecnico a disposizione, oppure a gruppi, complessivi e dettagli relativi, per i quali un Ente di manutenzione può effettuare sostituzioni e piccole riparazioni con l'ausilio di particolari attrezzature di lavoro e di prova normalmente a sua disposizione e con adeguato personale tecnico specializzato.

c) le voci indicate nella colonna 2 sono quelle utilizzabili per le grandi riparazioni, con mezzi adeguati e personale specializzato, presso gli Enti di riparazione o Ditta.

3.2.5. Colonne « **Codice del Progettatore Costruttore** » e « **Codice del Riproduttore** ». Includono i numeri-codice delle seguenti Ditte costruttrici delle parti di ricambio elencate in questo catalogo, comprese le Ditte indicate al precedente paragrafo 1.2.:

CODICI ED INDIRIZZI DEI COSTRUTTORI SUBFORNITORI
— IN ORDINE DI CODICE —

Codice	Nome ed indirizzo
A0000	LITTON PRECISION PRODUCT VIA ARCO 4 20121 MILANO - ITALIA
A0019	AERITALIA - STABILIMENTI DI TORINO CORSO MARCHE 41 10146 TORINO - ITALIA
A0043	PIRELLI - S.p.A. PIAZZA DUCA D'AOSTA 3 20124 MILANO - ITALIA
A0062	SIEMENS - S.p.A. PIAZZALE ZAVATTARI 12 20149 MILANO - ITALIA
A0072	*See A0084*
A0073	FACE STANDARD - S.p.A. VIA L. BODIO 33 20158 MILANO - ITALIA
A0076	MICROTECNICA - S.p.A. VIA MADAMA CRISTINA 149 10126 TORINO - ITALIA
A0084	F.I.A.R. - C.G.E. DIVISIONE ELETTRONICA PROFESSIONALE VIA G.B. GRASSI 93 20157 MILANO - ITALIA
A0170	AERITALIA - STABILIMENTO DI POMIGLIANO D'ARCO 80038 POMIGLIANO D'ARCO NAPOLI - ITALIA
A0189	PIAGGIO RINALDO - S.p.A. INDUSTRIE AERONAUTICHE E MECC. VIALE BRIGATA BISAGNO 14 16129 GENOVA - ITALIA
A0210	S.I.R.E.M. - S.r.l. IMPIANTI ELETTROMECCANICI VIA E. GIOVENALE 55 00171 ROMA - ITALIA
A0212	O.T.E. - S.p.A. OFF. TOSCANE ELETTRONICHE VIA DI CACIOLLE 15 50127 FIRENZE - ITALIA
A0267	A.S.T.E.R. - APPLICAZ. STUDIO TECN. ELECTRO RADIO VIA BALDUCCI 22 20158 MILANO - ITALIA
A0299	F.E.M.E. - S.p.A. VIALE CERTOSA 1 20149 MILANO - ITALIA
A0303	MONA SECONDO OFFICINE AERONAUTICHE 21019 SOMMA LOMBARDO (VARESE) - ITALIA
A0304	RAINA & C. - S.n.c. CORSO TORINO 14 10098 RIVOLI (TORINO) - ITALIA
A0305	S.A.G.A. PIAZZA DUCA D'AOSTA 20124 MILANO - ITALIA
A0307	AERITALIA - STABILIMENTO DI NERVIANO VIALE EUROPA 20014 NERVIANO (MILANO) - ITALIA
A0310	SAVARA - S.p.A. COSTRUZIONI MECCANICHE VIALE RISORGIMENTO 5 10092 BEINASCO (TORINO) - ITALIA
A0355	ITALIA - S.p.A. VIA PIAVE 11 21019 SOMMA LOMBARDO (VARESE) - ITALIA
A0359	OLEODINAMICA MAGNAGHI - S.p.A. VIA STAMIRA D'ANCONA 27 20127 MILANO - ITALIA
A0614	COMPAGNIA ITALIANA TUBI METALLICI FLESSIBILI - S.p.A. CORSO VERCELLI 501 10156 TORINO - ITALIA
A0809	MAGNAGHI NAPOLI S.p.A. VIA GALILEO FERRARIS 76 80142 NAPOLI - ITALIA
A1252	SIAI-MARCHETTI - S.p.A. VIALE INDIPENDENZA 4 21019 SESTO CALENDE (VARESE) - ITALIA
A1384	NARDI - S.p.A. COSTRUZ. AERONAUTICHE VIALE CONSERVATORIO 11 20122 MILANO - ITALIA
A1577	AEREA - S.p.A. VIA S. PELLICO 12 20121 MILANO - ITALIA
A1582	FAREM - S.r.l. VIA G. DI VITTORIO 317 20099 SESTO SAN GIOVANNI (MILANO) - ITALIA
A1587	VEAM VIA MONTEGRAPPA 21 20020 ARESE (MILANO) - ITALIA

Codice	Nome ed indirizzo
A1615	SELENIA - S.p.A. INDUSTRIE ELETTRONICHE ASSOCIATE VIA TIBURTINA 00131 ROMA - ITALIA
A1617	CAIRELLI - S.r.l. LARGO GOLDONI 44 00187 ROMA - ITALIA
A1620	F.I.M.A.C. FABBR. ITAL. MECC. ARIA COMPRESSA VIA I. PETITTI 18 20149 MILANO - ITALIA
A1996	OMI - S.p.A. VIA DELLA VASCA NAVALE 81 00146 ROMA - ITALIA
A1997	ELETTRONICA - S.p.A. VIA TIBURTINA 650 00159 ROMA - ITALIA
A2142	AERONAUTICA MACCHI - S.p.A. VIA S. VITO SILVESTRO 80a 21100 VARESE - ITALIA
A2233	NUOVA S. GIORGIO - S.p.A. VIA L. MANARA 2 16154 GENOVA SESTRI - ITALIA
A2297	S.I.E.M. - S.p.A. VIA MARENCO 25 10126 TORINO - ITALIA
A2510	SACA - S.p.A. SOC. COSTRUZIONI AERONAVALI VIA A. IMPERATORE 16 73100 LECCE - ITALIA
A2547	MAGNETI MARELLI - S.p.A. FABBRICA ITALIANA VIA GUASTALLA 2 20122 MILANO - ITALIA
A2829	LOGIC - S.a.s. di MARCHI G. & C. VIA ZURETTI 33 20125 MILANO - ITALIA
A2836	RIBALI - S.r.l. VIA COSIMO DEL FANTE 2 20122 MILANO - ITALIA
A2859	VITALE ETTORE INDUSTRIA GOMMA VIA PONTI ROSSI 230 80141 NAPOLI - ITALIA
A2898	*See A3004*
A3004	O.M.A. DI TONTI UMBERTO & C. s.a.s. OFFICINE MECCANICHE AERONAUTICHE VIA DELL'AEROPORTO 06034 FOLIGNO (PERUGIA) - ITALIA
A3005	OFFICINE AERONAVALI - S.p.A. VIALE S. MARCO 1757 30124 VENEZIA - ITALIA
A3051	L.E.M.A.R. - S.r.l. LAB. ELETTRO MECCANICO APPARATI RADIO VIA FILIPPO MARCHETTI 23 00199 ROMA - ITALIA
B0113	SABCA - S.A. BELGE DE CONSTRUCTIONS AERONAUTIQUES HAREN/BRUXELLES - BELGIUM
D0245	DUTTENHOEFER GOTTLIEB HASSLOCK PFALZ - GERMANY
D4278	VDO TACHOMETER-WERKE A SCHINDLING GMBH FRANKFURT MAIN - GERMANY
D9722	VARTA DEAC GMBH FRANKFURT MAIN - GERMANY
F1598	FENWICK - AVIATION S.A. PARIS - FRANCE
H9177	BROWN, BOVERI AND CIE A.G. BADEN - SWITZERLAND (see code 09601)
K0095	NEGRETTI AND ZAMBRA LTD. AYLESBURY BUCKS - ENGLAND
K0510	DARCHEM ENGINEERING LTD. STOCKTON-ON TEES CO. DURHAM - ENGLAND
K2493	KIMBALL AND CO LTD. LONDON - ENGLAND
R0482	TELEFON FABRIK AUTOMATIC A.S. COPENHAGEN K. - DENMARK
U0025	DUNLOP RUBBER CO. LTD. LONDON - ENGLAND
U1595	AVDEL LTD. WELWYN GARDEN CITY, HERTS - ENGLAND
U1604	MARTIN BAKER AIRCRAFT CO. LTD. UXBRIDGE, MIDDLESEX - ENGLAND
U1901	BELL'S ASBESTOS AND ENGINEERING LTD. SLOUGH BUCKS - ENGLAND
00000	ORDNANCE CORPS WASHINGTON, D.C. - U.S.A.
00502	ADEL DIVISION OF DE LAVAL TURBINE CALIFORNIA INC. BURBANK, CALIF. - U.S.A.
00624	AEROQUIP CORP. AIRCRAFT DIVISION JACKSON, MICH. - U.S.A.
00712	TELEDYNE INC. RADAR RELAY DIVISION SANTA MONICA, CALIF. - U.S.A.
01297	*See 73842*
01414	AIRCRAFT POROUS MEDIA INC. GLEN COVE, N.Y. - U.S.A.
01484	REYNOLDS METALS CO. LOUISVILLES, K.Y. - U.S.A.
01547	*See 31441*
01878	JORDAN ELECTRONICS DIVISION OF VICTOREEN INSTRUMENT CO. INC. ALHAMBRA, CALIF. - U.S.A.
01930	AMEROCK CORP. ROCKFORD, ILL. - U.S.A.
01976	AMERICAN CHAIN AND CABLE CO. INC. BRIDGEPORT, CONN. - U.S.A.
02005	HAYDON SWITCH AND INSTRUMENT INC. WATERBURY, CONN. - U.S.A.
02288	ALLIED CONTROL CO. INC. PLANTSVILLE, CONN. - U.S.A.
02310	ABSCOA INDUSTRIES INGLEWOOD, CALIF. - U.S.A.
02413	AUTOMATIC SPRINKLER CORP. OF AMERICA ELMIRA, N.Y. - U.S.A.
02660	AMPHENOL CORP. BROADVIEW, ILL. - U.S.A.

Codice	Nome ed indirizzo
02750	CONSOLIDATED CONTROLS CORP. 15 DURANT AVE BETHEL, CONN. - U.S.A.
02758	U.S. BEARING DIV. OF NETWORKS ELECTRONIC CORP. CHATSWORTH, CALIF. - U.S.A.
02803	ARTISAN ENGINEERING AND MFG. CO. LOS ANGELES, CALIF. - U.S.A.
02859	ITT INDUSTRIAL PRODUCTS DIVISION SAN FERNANDO, CALIF. - U.S.A.
02987	BENDIX CORP. THE, FLIGHT AND ENGINE INSTRUMENTS DIV. SOUTH MONTROSE, PA. - U.S.A.
03034	PENN KEYSTONE CORP. ANSONIA, CONN. - U.S.A.
03088	ARO EQUIPMENT OF CALIFORNIA LOS ANGELES, CALIF. - U.S.A.
03481	GOODRICH B.F. CO. AEROSPACE AND DEFENSE PRODUCTS DIV. AKRON, OHIO - U.S.A.
03680	*See 56878*
03925	STRATOFLEX INC. EL SEGUNDO, CALIF. - U.S.A.
03936	GLASSCO INSTRUMENT CO. PASADENA, CALIF. - U.S.A.
03942	MAUREY INSTRUMENT CO. CHICAGO, ILL. - U.S.A.
03972	AUTRONICS CORP. PASADENA, CALIF. - U.S.A.
03990	ARO EQUIPMENT CORP. BRYAN, OHIO - U.S.A.
04073	AVIEL ELECTRONICS INC. BURBANK, CALIF. - U.S.A.
04211	COASTAL DYNAMICS CORP. VENISE, CALIF. - U.S.A.
04274	ROSEMOUNT ENGINEERING CO. MINNEAPOLIS, MINN. - U.S.A.
04276	ALCOR VALVE SPECIALTIES CO. PLEASANTVILLE, N.J. - U.S.A.
04286	MISSIMERS INC. GLENDALE, CALIF. - U.S.A.
04713	MOTOROLA SEMICONDUCTOR PRODUCTS INC. PHOENIX, ARIZ. - U.S.A.
05087	*See 13539*
05089	KING MACHINE AND MFG. CO. BURBANK, CALIF. - U.S.A.
05151	MARQUARDT CORP., OGDEN DIV. OGDEN, UTAH - U.S.A.
05209	TED MFG CORP. JOHNSON DR SHAWNEE MISSION, KANSAS - U.S.A.
05257	COMPUTING DEVICES OF CANADA LTD. OTTAWA, ONTARIO - CANADA
05476	FIRESTONE COATED FABRICS CO., DIV. OF FIRESTONE TIRE AND RUBBER CO. AKRON, OHIO - U.S.A.
05574	VIKING INDUSTRIES INC. CHATSWORTH, CALIF. - U.S.A.
05802	*See 80006*
06177	PNEUDRAULICS INC. MONTCLAIR, CALIF. - U.S.A.
06213	BAY CITY - MANITOWOC CORP. BAY CITY, MICH. - U.S.A.
06275	ALLEN R. C. AIRCRAFT, INSTRUMENT DIVISIONS OF ALLEN R. C. BUSINESS MACHINES INC. GRAND RAPIDS, MICH. - U.S.A.
06331	TELEDYNE INC., MCCORMICK - SELPH DIV. HOLLISTER, CALIF. - U.S.A.
06481	LITTON SYSTEMS INC., GUIDANCE AND CONTROL SYSTEMS DIV. WOODLAND HILLS, CALIF. - U.S.A.
06650	BELL AND HOWELL CO. CHICAGO, ILLINOIS - U.S.A.
06845	BENDIX CORP., THE, COMMUNICATIONS DIV. BALTIMORA, MD. - U.S.A.
06848	BENDIX CORP., THE, ENERGY CONTROLS DIV. SOUTH BEND, IND. - U.S.A.
07166	WELLS INDUSTRIES CORP. SANTA ANA, CALIF. - U.S.A.
07187	SPERRY FLIGHT SYSTEMS, DIV. OF SPERRY RAND CORP. PHOENIX, ARIZ. - U.S.A.
07199	UNITED STATES RADIUM CORP. NORTH HOLLYWOOD, CALIF. - U.S.A.
07204	GLAR-BAN CORP. BUFFALO, N.Y. - U.S.A.
07210	STURM RUGER AND CO. INC. SOUTH PORT, CONN. - U.S.A.
07217	GARRETT MFG. LIT. REXDALE, ONTARIO - CANADA
07268	*See 57711*
07482	GENERAL ELECTRIC CO., A/C ENGINE GROUP CINCINNATI, OHIO - U.S.A.
07718	IRVIN INDUSTRIES INC. GARDENA, CAL. - U.S.A.
07797	ROCKER SOLENOID CO. HARBOR CITY, CALIF. - U.S.A.
07940	ROVALCO CONTROLS HARBOR CITY, CALIF. - U.S.A.
08108	LAMP INDUSTRY FOR USE WITH INDUSTRY DESIGNATIONS AND ABBREVIATIONS FOR LAMPS
08484	BREEZ CORPORATIONS INC. UNION, N.J. - U.S.A.
08524	DEUTSCH FASTENER CORP. LOS ANGELES, CALIF. - U.S.A.
08719	JAY-EL PRODUCTS INC. GARDENA, CALIF. - U.S.A.
08806	GENERAL ELECTRIC CO. MINIATURE LAMP DEPT. CLEVELAND, OHIO - U.S.A.
09601	BROWN, BOVERI AND CIE, A.G. BADEN - SWITZERLAND (see code H9177)
09790	CONSOLIDATED CONTROLS CORP. EL SEGUNDO, CALIF. - U.S.A.
09875	*See U1595*
09959	A/C INSTRUMENTS CO. COMMERCE DRIVE MONTGOMERYVILLE INDUSTRIAL CENTER MONTGOMERYVILLE, PA. - U.S.A.
10156	CANADA ILLINOIS TOOLS LTD. ONTARIO - CANADA
10349	*See U0025*
11083	CARTERPILLAR TRACTOR CO. PEORIA, ILL. - U.S.A.

Codice	Nome ed indirizzo
11139	DEUTSCH CC ELECTRONIC COMPONENTS DIV. BANNING, CALIF. - U.S.A.
11907	*See 29372*
13539	ACME-DIVAC INDUSTRIES INC. HAWTHORN, CALIF. - U.S.A.
13556	CINCH-NULINE DIV. OF UNITED CARR INC. MINNEAPOLIS, MINN. - U.S.A.
14608	CORBIN CABINET LOCK DIV. OF ENHART CORP. NEW BRITAIN, CONN. - U.S.A.
15411	LSI SERVICE CORP. LOS ANGELES DIV. LOS ANGELES, CALIF. - U.S.A.
15605	CUTLER-HAMMER INC. MILWAUKEE, WIS. - U.S.A.
16357	SPACE FLEX CORP. LOS ANGELES, CALIF. - U.S.A.
16764	DELCO - REMY DIV. OF GENERAL MOTORS CORP. ANDERSON, IND. - U.S.A.
17991	SCHULZ RUBBER PRODUCTS SAN GABRIEL, CALIF. - U.S.A.
18616	STRAUB F.A. INC. BURBANK, CALIF. - U.S.A.
21335	FAFNIR BEARING CO., DIVISION OF TEXTRON INC. NEW BRITAIN, CONN. - U.S.A.
24446	GENERAL ELECTRIC CO. 1 RIVER ROAD SCHENECTADY, N.Y. - U.S.A.
24494	GENERAL NUCLEONICS DIV. TYCO LABORATORIES INC. POMONA, CALIF. - U.S.A.
24529	*See 07718*
24727	GIANNINI VOLTEX CORP. WHITTIER, CALIF. - U.S.A.
24930	ITT GILFILLAN INC. VAN NUYS, CALIF. - U.S.A.
25472	GOODRICH BF CO. THE AKRON, OHIO - U.S.A.
26044	GAR - KENYON INSTRUMENTS INC. BREWSTER, N.Y. - U.S.A.
26624	ROBINTECH INC., ELECTRO MECHANICAL DIVISION BURBANK, CALIF. - U.S.A.
29372	TRIDAIR INDUSTRIES FASTENER DIV. TORRANCE, CALIF. - U.S.A.
29666	HUCK MFG. CO. DETROIT, MICH. - U.S.A.
30323	ILLINOIS TOOLS WORKS INC. CHICAGO, ILL. - U.S.A.
31441	GLOBAL SYSTEM INC. ROCKET JET/AIRBONE RESEARCH DIVISION GLENDALE, CALIF. - U.S.A.
35076	AIRCRAFT APPLIANCES AND EQUIPMENT LTD. REXDALE, ONTARIO - CANADA
35344	LEACH CORP. RELAY DIVISION LOS ANGELES, CALIF. - U.S.A.
35346	FERRO METAL LTD. 2300 RUE GERNEAU VILLE JACQUES CARTIER, QUEBEC - CANADA
35351	LEAR SIEGLER INC., INSTRUMENT DIVISION GRAND RAPIDS, MICH. - U.S.A.
35918	LEWIS ENGINEERING CO. THE NAUGATUCK, CONN. - U.S.A.

Codice	Nome ed indirizzo
36126	LEITZ ERNEST CANADA LTD. MIDLANC, ONTARIO - CANADA
36659	LOCKHEED - CALIFORNIA CO. A DIVISION OF LOCKHEED A/C CORP. BURBANK, CALIF. - U.S.A.
40920	MPB CORP. PARK KEENE, N.H. - U.S.A.
40931	HONEYWELL INC. MINNEAPOLIS, MINN. - U.S.A.
44655	OHMITE MFG. CO. SKOKIE, ILL. - U.S.A.
45402	PACIFIC SCIENTIFIC CO. ANAHEIM, CALIF. - U.S.A.
45413	PACKARD BELL ELECTRONICS CORP. SPACE AND SYSTEMS DIV. NEWBURY PARK, CALIF. - U.S.A.
49671	RADIO CORP. OF AMERICA NEW YORK, N.Y. - USA.
49956	RAYTHEON CO. LEXINGTON, MASS. - U.S.A.
50599	RESISTOFLEX CORP. ROSELAND, N.J., U.S.A.
50625	REVERE CORP. OF AMERICA WALLINGFORD, CONN. - U.S.A.
53750	STANDARD ELECTRONIC CORP. STANFORD, CONN. - U.S.A.
55933	SONOTONE CORP. ELMSFORD, N.Y. - U.S.A.
56289	SPRAGUE ELECTRIC CO. NORTH ADAMS, MASS. - U.S.A.
56878	STANDARD PRESSED STEEL CO. JENKINTOWN, PA. - U.S.A.
57068	STANLEY WORKS NEW BRITAIN, CONN. - U.S.A.
57711	PENNWALT CORP. S.S. WHITE INDUSTRIAL DIVISION OAK BROOK, ILL. - U.S.A.
58474	SUPERIOR ELECTRIC CO. BRISTOL, CONN. - U.S.A.
59875	TRW MECHANICAL PRODUCTS DIV. CLEVELAND, OHIO - U.S.A.
60038	TINKEN ROLLER BEARING CO. CANTON, OHIO - U.S.A.
60380	TORRINGTON CO., THE TORRINGTON, CONN. - U.S.A.
61349	AMETEK INC., UNITED STATES GUAGE DIVISION SELLERSVILLE, PA. - U.S.A.
61775	WESTINGHOUSE AIR BRAKE CO., SIGNAL AND COMMUNICATIONS DIV. SWISSVALE, PA. - U.S.A.
61864	UNITED - CARR INC. BOSTON, MASS. - U.S.A.
62983	VICKERS AEROSPACE DIVISION OF VICKERS DIVISION OF SPERRY RAND CORP. TROY, MICH. - U.S.A.
65083	WESTINGHOUSE ELECTRIC CORP., LAMP DIVISION BLOOMFIELD, N.J. - U.S.A.
65092	WESTON INSTRUMENTS INC., WESTON INSTRUMENTS DIVISION NEWARK, N.J. - U.S.A.

Codice	Nome ed indirizzo
65301	PENNWALT CORP. S.S. WHITE EQUIPMENT DIVISION NEW YORK, N.Y. - U.S.A.
66503	WOODWARD GOVERNOR CO. ROCKFORD, ILL. - U.S.A.
70210	AIRESEARCH MFG. CO. LOS ANGELES, CALIF. - U.S.A.
70309	*See 02288*
70628	ARROWHEAD PRODUCTS, DIV. OF FEDERAL-MOGUL CORP. LOS ALAMITOS, CALIF. - U.S.A.
71286	REX CHAINBELT INC. CAMLOC DIV. PARAMUS, N.J. - U.S.A.
71447	AMETEK/CALIFORNIA SPRING DIV. PICO-RIVERA, CALIF. - U.S.A.
71468	ITT CANNON ELECTRIC INC. LOS ANGELES, CALIF. - U.S.A.
71503	CLARY CORP. SAN GABRIEL, CALIF. - U.S.A.
71570	COLONIAL STEEL, DIV. OF VANADIUM ALLOYS STEEL CO. MONACA, PA. - U.S.A.
71688	COOK ELECTRIC CO. MORTON GROVE, ILL. - U.S.A.
72121	ELECTRONIC SPECIALTY CO., EEMCO DIVISION LOS ANGELES, CALIF. - U.S.A.
72152	ELECTRONIC RESOURCES INC. LOS ANGELES, CALIF. - U.S.A.
72599	GARRET CORP. THE 9851 SEPULVEDA BLVD LOS ANGELES, CALIF. - U.S.A.
72699	GENERAL INSTRUMENT CORP. NEWARK, N.J. - U.S.A.
72794	DZUS FASTENER CO. INC. WEST ISLIP, N.Y. - U.S.A.
72914	GRIMES MFG. CO. URBANA, OHIO - U.S.A.
72962	ELASTIC STOP NUT CORP. OF AMERACE ESNA CORP. UNION, N.J. - U.S.A.
73030	UNITED AIRCRAFT CORP., HAMILTON STANDARD DIVISION WINDSOR LOCKS, CONN. - U.S.A.
73168	FENWAL INC. ASHLAND, MASS. - U.S.A.
73197	HI - SHEAR CORP. TORRANCE, CALIF. - U.S.A.
73425	FULLER BRUSH CO., INDUSTRIAL DIVISION HARTFORD, CONN. - U.S.A.
73760	ITT AEROSPACE CONTROLS BURBANK, CALIF. - U.S.A.
73842	GOODYEAR TIRE AND RUBBER CO. AKRON, OHIO - U.S.A.
73957	GROOV-PIN CORP. RIDGFIELD, N.J. - U.S.A.
74193	HEINEMANN ELECTRIC CO. TRENTON, N. J. - U.S.A.
74868	BUNKERRAMO CORP. THE ANPHENOL R.F. DIVISION DANBURY, CONN. - U.S.A.
75005	STANLEY-JUDD, DIVISION OF STANLEY WORKS WALLINGFORD, CONN. - U.S.A.
75250	ABEX CORP., AEROSPACE DIV. OXNARD, CALIF. - U.S.A.
75361	KOEHLER-DAYTON INC. DAYTON, OHIO - U.S.A.
75662	MENASCO MFG. CO. BURBANK, CALIF. - U.S.A.
76005	LORD MFG. CO., DIV. OF LORD CORP. ERIE, PA. - U.S.A.
76241	MAUREY MFG. CO. 2907-23 SOUTH WABASH AVE CHICAGO, ILL. - U.S.A.
76374	AIKEN INDUSTRIES INC., MECHANICAL PRODUCTS DIV. JACKSON, MICH. - U.S.A.
76665	NATIONAL LOCK WASHER DIV. CHARTER WIRE SOMERVILLE, N.J. - U.S.A.
76689	NATIONAL SCREW AND MFG. CO. MENTOR, OHIO - U.S.A.
76691	NATIONAL TELEPHONE SUPPLY CO. INC. CLEVELAND, OHIO - U.S.A.
76793	NOBLES INDUSTRIES INC. ST. PAUL, MINN. - U.S.A.
77045	SUNBEAM ELECTRONICS, DIV. JOHN OSTER MFG. CO. FORT LAUDERDALE, FLA. - U.S.A.
77068	BENDIX CORP., THE, ELECTRODYNAMICS DIV. NORTH HOLLYWOODS, CALIF. - U.S.A.
77292	PIONEER PARACHUTE CO. INC. MANCHESTER, CONN. - U.S.A.
77751	FAIRCHILD HILLER CORP. REPUBLIC AVIATION DIVISION CONKLIN ST. FARMINGDALE LONG INSLAND, N.Y. - U.S.A.
77786	RHODES JAMES H. AND CO. CHICAGO, ILL. - U.S.A.
77820	BENDIX CORP., THE, ELECTRICAL COMPONENTS DIV. SIDNEY, N.Y. - U.S.A.
77860	SHERMAN H.B. MFG. CO. BATTLE CREEK, MICH. - U.S.A.
77896	REX CHAINBELT INC. BEARING DIV. DOWNERS GROVE, ILL. - U.S.A.
78189	ILLINOIS TOOL WORKS INC., SHAKEPROOF DIVISION ELGIN, ILL. - U.S.A.
78385	SOUTH WIND, DIVISION OF STEWART-WARNER CORP, INDIANAPOLIS, IND. - U.S.A.
78553	TINNERMAN PRODUCTS INC. CLEVELAND, OHIO - U.S.A.
78570	TITEFLEX, DIV. OF ATLAS CORP. SPRINGFIELD, MASS. - U.S.A.
78710	TELEFLEX INC. NORTH WALES, PA. - U.S.A.
78741	HITCO CORP. GARDENA, CALIF. - U.S.A.
79294	WESTON HYDRAULICS LTD. VAN NUYS, CALIF. - U.S.A.
79300	WALTHAM PRECISION INSTRUMENT INC., WALTHAM DIVISION WALTHAM, MASS. - U.S.A.
79318	WHITTAKER CORP., TECHNICAL PRODUCTS DIV. CHATSWORTH, CALIF. - U.S.A.
79320	WICHITA MACHINE TOOL CO. WICHITA, KANS. - U.S.A.
79326	WIGGINS E.B. INC. LOS ANGELES, CALIF. - U.S.A.

Codice	Nome ed indirizzo
79405	WOOD ELECTRIC CORP. DANVERS, MASS. - U.S.A.
79470	WEATHERHEAD CO., THE CLEVELAND, OHIO - U.S.A.
79555	PENNWALT CORP. S.S. WHITE DIV. PHILADELPHIA, PA. - U.S.A.
80006	AIRTRON INC., DIV. OF LITTON INDUSTRIES INC. MORRIS PLAINS, N.J. - U.S.A.
80049	DEPARTMENT OF THE AIR FORCE WASHINGTON, D.C. - U.S.A.
80058	JOINT ELECTRONIC TYPE DESIGNATION SYSTEM WASHINGTON, D.C. - U.S.A.
80097	AMERICAN CHAIN AND CABLE CO. INC. DETROIT, MICH. - U.S.A.
80205	NATIONAL AEROSPACE STANDARDS COMMITTEE. AERONAUTICAL INDUSTRIES ASSOCIATION OF AMER. WASHINGTON, D.C. - U.S.A.
80236	OLIN MATHIESON CHEMICAL CORP., ASSOCIATED PRODUCTS OPERATIONS EAST ALTON, ILL. - U.S.A.
80249	HAZELTINE CORP. LITTLE NECK, N.Y. - U.S.A.
80523	AMERICAN CHAIN AND CABLE CO. INC. CABLE CONTROLS DIV. ADRIAN, MICH. - U.S.A.
80539	STANDARD PRESSED STEEL CO. SANTA ANA, CALIF. - U.S.A.
80756	RAMSEY CORP., MANCHESTER-WEIDMAN ST. LOUIS, MO. - U.S.A.
81073	GRAYHILL INC. LA GRANGE, ILL. - U.S.A.
81312	WINCHESTER ELECTRONICS DIVISION LITTON INDUSTRIES INC. OAKVILLE, CONN. - U.S.A.
81321	PUROLATOR INC. RAHWAY, N.J. - U.S.A.
81348	FEDERAL SPECIFICATIONS PROMULGATED BY GENERAL SERVICES ADMINISTRATION WASHINGTON, D.C. - U.S.A.
81349	MILITARY SPECIFICATIONS PROMULGATED BY STANDARDIZATION DIV. WASHINGTON, D.C. - U.S.A.
81376	SOUTHWEST PRODUCTS CO. MONROVIA, CALIF. - U.S.A.
81400	HASKEL ENGINEERING AND SUPPLY CO. BURBANK, CALIF. - U.S.A.
81579	MASON ELECTRIC CO. INC. LOS ANGELES, CALIF. - U.S.A.
81640	CONTROLS CO. OF AMERICA, CONTROL SWITCH DIV. FOLCROFT, PA. - U.S.A.
81831	FILTRON CO. INC., THE L.I., N.Y. - U.S.A.
81833	GREAT LAKES MFG., DIV. OF LAVAL TURBINE CALIFORNIA INC. CLEVELAND, OHIO - U.S.A.
81839	*See 07940*
81860	BARRY CONTROLS, DIV. OF BARRY WRIGHT CORP. WATERTOWN, MASS. - U.S.A.
81872	OLYMPIC PLASTICS CO. DIV. OMNETIC INDUSTRIES INC. LOS ANGELES, CALIF. - U.S.A.
81873	HYDRAULIC RESEARCH AND MFG. CO. VALENCIA, CALIF. - U.S.A.
81896	SARGENT INDUSTRIES INC., AIRITE DIVISION EL SEGUNDO, CALIF. - U.S.A.
81901	CONTROL PRODUCTS INC. HANOVER, N.J. - U.S.A.
81982	HYDRO-AIRE DIV. CRANE CO. BURBANK, CALIF. - U.S.A.
82152	TRANSCO PRODUCTS INC. VENICE, CALIF. - U.S.A.
82221	WILSON JONES CO. ELIZABETH, N.J. - U.S.A.
82227	HAYDON A W. CO. WATERBURY, CONN. - U.S.A.
82267	SCHULZ TOOL AND MFG. CO. SAN GABRIEL, CALIF. - U.S.A.
82647	TEXAS INSTRUMENTS INC. CONTROL PRODUCTS DIVISION ATTLEBORO, MASS. - U.S.A.
82829	ALLEN AIRCRAFT PRODUCTS INC. RAVENNA, OHIO - U.S.A.
82833	SARGENT INDUSTRIES INC. HANSEN-LYNN DIV. BURBANK, CALIF. - U.S.A.
83008	STACO INC. DAYTON, OHIO - U.S.A.
83014	HARTWELL CORP. LOS ANGELES, CALIF. - U.S.A.
83259	PARKER SEAL CO. DIV. OF PARKERHANNIFIN CORP. CULVER CITY, CALIF. - U.S.A.
83298	BENDIX CORP., THE, ELECTRIC POWER DIV. EATONTOWN, N.J. - U.S.A.
83324	ROSAN INC. NEWPORT BEACH, CALIF. - U.S.A.
83451	AICO PULLEY CORP. WILKES-BARRE, PA. - U.S.A.
83548	LANGOON MFG. CO. GLENDALE, CALIF. - U.S.A.
83564	WEMAC CO. SANTA ANA, CALIF. - U.S.A.
83903	ACCURATE DIE AND STAMPING DIV., ALLIED PRODUCTS CORP. CHICAGO, ILL. - U.S.A.
83930	ADEL PRODUCTION, DIV. OF DE LAVAL TURBINE CALIFORNIA INC. HUNTINGTON W, VA. - U.S.A.
84256	AVDEL INC. BURBANK, CALIF. - U.S.A.
84970	SARKES TARZIAN INC. BROADCAST EQUIPMENT DIVISION BLOOWINGTON, IND. - U.S.A.
84971	TA. MFG. CORP. LOS ANGELES, CALIF. - U.S.A.
84987	INDUSTRIAL DESIGN LABORATORIES CULVER CITY, CALIF. - U.S.A.
86090	CARTER J.C. CO. COSTA MESA, CALIF. - U.S.A.
86579	PRECISION RUBBER PRODUCTS CORP. DAYTON, OHIO - U.S.A.
86768	REPUBLIC MFG. CO. CLEVELAND, OHIO - U.S.A.

Codice	Nome ed indirizzo
86831	ROYLIN A DIVISION OF THE RUCKER COMPANY GLENDALE, CALIF. - U.S.A.
86928	SEASTROM MFG. CO. INC. GLENDALE, CALIF. - U.S.A.
86931	SEATTLE RETREAD SEATTLE, WASH. - U.S.A.
87034	MARCO OAK INDUSTRIES, INC. ANAHEIM, CALIF. - U.S.A.
87567	STEINTHAL M. AND CO. INC. NEW YORK, N.Y. - U.S.A.
88044	AERONAUTICAL STANDARDS GROUP DEPT. OF NAVY AND AIR FORCE WASHINGTON, D.C. - U.S.A.
88422	GENERAL ELECTRIC CO. GENERAL PURPOSE MOTOR DEPT. FORT WAYNE, IND. - U.S.A.
88535	ALAR PRODUCTS INC. CLEVELAND, OHIO - U.S.A.
89307	SPRAGUE ENGINEERING, A TELEDYNE CO. GARDENA, CALIF. - U.S.A.
89660	*See 59875*
89944	KOLLSMAN INSTRUMENT CORP. ELMHURST, N.Y. - U.S.A.
89945	OLIN CORP. NEW HAVEN, CONN. - U.S.A.
89954	GENERAL ELECTRIC CO., AVIONIC CONTROLS DEPT. BINGHANTON, N.Y. - U.S.A.
90348	ITT FEDERAL LABORATORIES, DIV. OF INTERNATIONAL TELEPHONE AND TELEGRAPH CORP. CLIFTON, N.J. - U.S.A.
91130	*See 00502*
91207	*See 26044*
91379	PEACOCK ENGINEERING CO. DIV. OF MONOGRAM INDUSTRIES NORWALK, CALIF. - U.S.A.
91511	AUTO VALVE INC. DAYTON, OHIO - U.S.A.
91561	BRUNING CO., THE LINCOLN, NEBR. - U.S.A.
91637	DALE ELECTRONICS INC. COLUMBUS, NEBR. - U.S.A.
91712	*See 99684*
91812	JANCO CORP. BURBANK, CALIF. - U.S.A.
91816	JAMES POND AND CLARK DIV. CIRCLE SEAL CORP. ANAHEIN, CALIF. - U.S.A.
91927	*See 83014*
91929	HONEYWELL INC., MICRO SWITCH DIVISION FREEPORT, ILL. - U.S.A.
92003	PARKERHANNIFIN CORP. AREOSPACE GROUP LOS ANGELES, CALIF. - U.S.A.
92586	RUSSEL JOHN M., DIV. OF RISDON MFG. CO. NAUGATUCK, CONN. - U.S.A.
93517	GENERAL ELECTRIC CO., RESIDENTIAL DISTRIBUTION TRANSFORMER DEPT. OAKLAND, CALIF. - U.S.A.
93907	CANCAR SCREW AND MFG. CO. ROCKFORD, ILL. - U.S.A.
94580	HONEYWELL INC. AEROSPACE MINNEAPOLIS DIV. MINNEAPOLIS, MINN. - U.S.A.
94581	NATIONAL UTILITIES CORP. MONROVIA, CALIF. - U.S.A.
94750	*See K2493*
94756	NORTH AMERICAN ROCKWELL CORP., AUTONETICS DIV. ANAHEIM, CALIF. - U.S.A.
94988	WAGNER ELECTRIC CORP., TUNGSOL DIVISION LIVINGSTONE, N.J. - U.S.A.
95260	*See 24727*
95263	LEECRAFT MFG. CO. INC. LONG ISLAND CITY, N.Y. - U.S.A.
95266	O.E.C.O. CORP. PORTLAND, OREGON - U.S.A.
95272	SARGENT INDUSTRIES INC., STILLMAN RUBBER DIVISION CULVER CITY, CALIF. - U.S.A.
95712	BENDIX CORP., THE, MICROWAVE DEVICES DIV. FRANKLIN, IND. - U.S.A.
95766	ALLEN DESIGN INC. BURBANK, CALIF. - U.S.A.
95879	ALEMITE INSTRUMENT, DIV. OF STEWART-WARNER CORP. CHICAGO, ILL. - U.S.A.
95888	*See B0113*
95950	FORREST WAGNIERE ENGINEERING CO. DIVISION OF CONAIR INC. LOS ANGELES, CALIF. - U.S.A.
96124	TEXTRON INC., ACCESSORY PRODUCTS CO. DIVISION WHITTIER, CALIF. - U.S.A.
96138	*See 26624*
96142	CALUMET AND HECLA CORP. FLEXONICS DIVISION BARTLETT ILL. - U.S.A.
96182	MASTER SPECIALTIES CO. COSTA MESA, CALIF. - U.S.A.
96212	KAISER AEROSPACE AND ELECTRONICS CORP. EMBE GEAR DIVISION GLENDALE, CALIF. - U.S.A.
96261	LEACH CORP., CONTROLS DIVISION AZUSA, CALIF. - U.S.A.
96487	VALCOR ENGINEERING CORP. KENILWORTH, N.J. - U.S.A.
96655	CALIFORNIA PLASTECK INC. RESEDA, CALIF. - U.S.A.
96906	MILITARY STANDARDS PROMULGATED BY STANDARDIZATION DIV. DIRECTORATE OF LOGISTICS SERVICES D.S.A. WASHINGTON, D.C. - U.S.A.
97198	*See 81640*
97393	SHUR-LOK CORP. SANTA ANA, CALIF. - U.S.A.
97424	GENERAL ELECTRIC CO., AEROSPACE ELECTRICAL EQUIPMENT DEPT. AEROSPACE INSTRUMENT BUSINESS SECTION WILMINGTON, MASS. - U.S.A.
97464	INDUSTRIAL RETAINING RING CO. CORDIER ST. IRVINGTON, N.J. - U.S.A.
97820	SHAMBAN W.S. AND CO. NEWBURY PARK, CALIF. - U.S.A.

Codice	Nome ed indirizzo
97896	UNITED CONTROL CORP. AEROSPACE DIVISION REDMOND, WASH. - U.S.A.
97925	SUDDEN SERVICE GLASS CO. LOS ANGELES, CALIF. - U.S.A.
97978	*See 84256*
98004	*See 29372*
98159	RUBBER TECK INC. GARDENA, CALIF. - U.S.A.
98315	DOWNEY MACHINE CO. INC. DOWNEY, CALIF. - U.S.A.
98439	PADWAY AIRCRAFT PRODUCTS INC. SUN VALLEY, CALIF. - U.S.A.
98441	STRATOFLEX INC. FORT WORTH, TEX. - U.S.A.
98489	*See 04286*
98505	HYDRA ELECTRIC BURBANK, CALIF. - U.S.A.
98524	CALIFORNIA DIVISION NATIONAL SCREW AND MFG. CO, LOS ANGELES, CALIF. - U.S.A.
98571	TELEDYNE SYSTEMS CO., CONTROL SYSTEM DIVISION EL SEGUNDO, CALIF. - U.S.A.
98625	AEROQUIPO CORP., MARMAN DIV. LOS ANGELES, CALIF. - U.S.A.
98689	NUCLEONIC CO. OF AMERICA BROOKLYN, N.Y. - U.S.A.
98738	STEWART-WARNER ELECTRONICS, DIVISION OF STEWART-WARNER CORP. CHICAGO, ILL. - U.S.A.
98749	SACRAMENTO AIR MATERIAL AREA MCCLELLAN AIR FORCE BASE SACRAMENTO, CALIF. - U.S.A.
98816	ALLOY INDUSTRIES DEVELOPMENT CO. BUENA PARK, CALIF. - U.S.A.
98817	SANTA ANITA ENGINEERING CO. SAN FERNANDO, CALIF. - U.S.A.
98889	TALLEY CORPORATION THE NEWBURY PARK, CALIF. - U.S.A.
98900	SEAMAN PRODUCTS OF CALIFORNIA SYLMAR, CALIF. - U.S.A.
98927	ELECTRONIC SPECIALTY CO. PORTLAND ELECTRONICS DIVISION PORTLAND, ORE. - U.S.A.
99017	PROTECTIVE CLOUSURES CO. INC. CA PLUGS DIV. BUFFALO, N.Y. - U.S.A.
99028	GLOBE ELECTRICAL MFG CO. GARDENA, CALIF. - U.S.A.
99135	SHERWOOD INDUSTRIES FLEXCO DIV. BELL GARDENS, CALIF. - U.S.A.
99238	AIR FORCE STANDARD
99251	BENDIX CORP., THE, INSTRUMENTS AND LIFE SUPPORT DIVISION DAVENPORT, IOWA - U.S.A.
99470	RANDALL CO. INC. LOS ANGELES, CALIF. - U.S.A.
99479	BOWMAR INSTRUMENT CORP. FORT WAYNE, IND. - U.S.A.
99643	STERER ENGINEERING AND MFG CO. LOS ANGELES, CALIF. - U.S.A.
99684	RATIGAN ELECTRONICS INC. LOS ANGELES, CALIF. - U.S.A.
99687	*See 49956*
99707	*See 81640*
99895	SWEETLAND ENGINEERING CO. PASADENA, CALIF. - U.S.A.

CODICI ED INDIRIZZI DEI COSTRUTTORI SUBFORNITORI
— IN ORDINE ALFABETICO —

Nome ed indirizzo	Codice
A.S.T.E.R. - APPLICAZ. STUDIO TECN. ELECTRO RADIO VIA BALDUCCI 22 20158 MILANO - ITALIA	A0267
A/C INSTRUMENTS CO. COMMERCE DRIVE MONTGOMERYVILLE INDUSTRIAL CENTER MONTGOMERYVILLE, PA. - U.S.A.	09959
ABEX CORP., AEROSPACE DIV. OXNARD, CALIF. - U.S.A.	75250
ABSCOA INDUSTRIES INGLEWOOD, CALIF. - U.S.A.	02310
ACCURATE DIE AND STAMPING DIV., ALLIED PRODUCTS CORP. CHICAGO, ILL. - U.S.A.	83903
ACME DIVAC INDUSTRIES INC. HAWTHORN, CALIF. - U.S.A.	13539
ADEL DIVISION OF DE LAVAL TURBINE CALIFORNIA INC. BURBANK, CALIF. - U.S.A.	00502
ADEL PRODUCTION, DIV. OF DE LAVAL TURBINE CALIFORNIA INC. HUNTINGTON W, VA. - U.S.A.	83930
AEREA - S.p.A. VIA S. PELLICO 12 20121 MILANO - ITALIA	A1577
AERITALIA - STABILIMENTI DI TORINO CORSO MARCHE 41 10146 TORINO - ITALIA	A0019
AERITALIA - STABILIMENTO DI POMIGLIANO D'ARCO 80038 POMIGLIANO D'ARCO NAPOLI - ITALIA	A0170
AERITALIA - STABILIMENTO DI NERVIANO VIALE EUROPA 20014 NERVIANO (MILANO) - ITALIA	A0307
AERONAUTICA MACCHI - S.p.A. VIA S. VITO SILVESTRO 80a 21100 VARESE - ITALIA	A2142
AERONAUTICAL STANDARDS GROUP DEPT. OF NAVY AND AIR FORCE WASHINGTON, D.C. - U.S.A.	88044

Nome ed indirizzo	Codice
AEROQUIP CORP. AIRCRAFT DIVISION JACKSON, MICH. - U.S.A.	00624
AEROQUIP CORP., MARMAN DIV. LOS ANGELES, CALIF. - U.S.A.	98625
AICO PULLEY CORP. WILKES - BARRE, PA. - U.S.A.	83451
AIKEN INDUSTRIES INC., MECHANICAL PRODUCTS DIV. JACKSON, MICH. - U.S.A.	76374
AIR FORCE STANDARD	99238
AIRCRAFT APPLIANCES AND EQUIPMENT LTD. REXDALE, ONTARIO - CANADA	35076
AIRCRAFT POROUS MEDIA INC. GLEN COVE, N.Y. - U.S.A.	01414
AIRESEARCH MFG. CO. LOS ANGELES, CALIF. - U.S.A.	70210
AIRTRON INC., DIV. OF LITTON INDUSTRIES INC. MORRIS PLAINS, N.J. - U.S.A.	80006
ALAR PRODUCTS INC. CLEVELAND, OHIO - U.S.A.	88535
ALCOR VALVE SPECIALTIES CO. PLEASANTVILLE, N.J. - U.S.A.	04276
ALEMITE INSTRUMENT, DIV. OF STEWART-WARNER CORP. CHICAGO, ILL. - U.S.A.	95879
ALLEN AIRCRAFT PRODUCTS INC. RAVENNA, OHIO - U.S.A.	82829
ALLEN DESIGN INC. BURBANK, CALIF. - U.S.A.	95766
ALLEN R. C. AIRCRAFT, INSTRUMENT DIVISION OF ALLEN R. C. BUSINESS MACHINES INC. GRAND RAPIDS, MICH. - U.S.A.	06275
ALLIED CONTROL CO. INC. PLANTSVILLE, CONN. - U.S.A.	02288
ALLOY INDUSTRIES DEVELOPMENT CO. BUENA PARK, CALIF. - U.S.A.	98816
AMERICAN CHAIN AND CABLE CO. INC., CABLE CONTROLS DIV. ADRIAN, MICH. - U.S.A.	80523
AMERICAN CHAIN AND CABLE CO. INC. BRIDGEPORT, CONN. - U.S.A.	01976
AMERICAN CHAIN AND CABLE CO. INC. DETROIT, MICH. - U.S.A.	80097
AMEROCK CORP. ROCKFORD, ILL. - U.S.A.	01930
AMETEK/CALIFORNIA SPRING DIV. PICO - RIVERA, CALIF. - U.S.A.	71447
AMETEK INC., UNITED STATES GAUGE DIVISION SELLERSVILLE, PA. - U.S.A.	61349
AMPHENOL CORP. BROADVIEW, ILL. - U.S.A.	02660
ARO EQUIPMENT CORP. BRYAN, OHIO - U.S.A.	03990
ARO EQUIPMENT OF CALIFORNIA LOS ANGELES, CALIF. - U.S.A.	03088
ARROWHEAD PRODUCTS, DIV. OF FEDERAL-MOGUL CORP. LOS ALAMITOS, CALIF. - U.S.A.	70628
ARTISAN ENGINEERING AND MFG. CO. LOS ANGELES, CALIF. - U.S.A.	02803
AUTO VALVE INC. DAYTON, OHIO - U.S.A.	91511
AUTOMATIC SPRINKLER CORP. OF AMERICA ELMIRA, N.Y. - U.S.A.	02413
AUTRONICS CORP. PASADENA, CALIF. - U.S.A.	03972
AVDEL INC. BURBANK, CALIF. - U.S.A.	84256
AVDEL LTD. WELWYN GARDEN CITY, HERTS - ENGLAND	U1595
AVIEL ELECTRONICS INC. BURBANK, CALIF. - U.S.A.	04073
BAY CITY - MANITOWOC CORP. BAY CITY, MICH. - U.S.A.	06213
BARRY CONTROLS, DIV. OF BARRY WRIGHT CORP. WATERTOWN, MASS. - U.S.A.	81860
BELL AND HOWELL CO. CHICAGO, ILLINOIS - U.S.A.	06650
BELL'S ASBESTOS AND ENGINEERING LTD. SLOUGH, BUCKS - ENGLAND	U1901
BENDIX CORP., THE, COMMUNICATIONS DIV. BALTIMORA, MD. - U.S.A.	06845
BENDIX CORP., THE, ELECTRICAL COMPONENTS DIV. SIDNEY, N.Y. - U.S.A.	77820
BENDIX CORP., THE, ELECTRIC POWER DIV. EATONTOWN, N.J. - U.S.A.	83298
BENDIX CORP., THE, ELECTRODYNAMICS DIV. NORTH HOLLYWOOD, CALIF. - U.S.A.	77068
BENDIX CORP., THE, ENERGY CONTROLS DIV. SOUTH BEND, IND. - U.S.A.	06848
BENDIX CORP. THE FLIGHT AND ENGINE INSTRUMENTS DIV. SOUTH MONTROSE, PA. - U.S.A.	02987
BENDIX CORP., THE, INSTRUMENTS, DIV. AND LIFE SUPPORT DAVENPORT, IOWA - U.S.A.	99251
BENDIX CORP., THE, MCROWAVE DEVICES DIV. FRANKLIN, IND. - U.S.A.	95712
BOWMAR INSTRUMENT CORP. FORT WAYNE, IND. - U.S.A.	99479
BREEZ CORPORATIONS INC. UNION, N.J. - U.S.A.	08484
BROWN, BOVERI AND CIE, A.G. BADEN - SWITZERLAND	H9177
BRUNING CO., THE LINCOLN, NEBR. - U.S.A.	91561
BUNKERRAMO CORP. THE ANPHENOL R.F. DIVISION DANBURY, CONN. - U.S.A.	74868
CAIRELLI - S.r.l. LARGO GOLDONI 44 00187 ROMA - ITALIA	A1617
CALIFORNIA DIVISION NATIONAL SCREW AND MFG. CO. LOS ANGELES, CALIF. - U.S.A.	98524
CALIFORNIA PLASTECK INC. RESEDA, CALIF. - U.S.A.	96655
CALUMET AND HECLA CORP. FLEXONICS DIVISION BARTLETT, ILL. - U.S.A.	96142
CANADA ILLINOIS TOOLS LTD. ONTARIO - CANADA	10156

Nome ed indirizzo	Codice
CANCAR SCREW AND MFG. CO. ROCKFORD, ILL. - U.S.A.	93907
CARTERPILLAR TRACTOR CO. PEORIA, ILL. - U.S.A.	11083
CARTER J. C. CO. COSTA MESA, CALIF. - U.S.A.	86090
CINCH-NULINE DIV. OF UNITED CARR INC. MINNEAPOLIS, MINN. - U.S.A.	13556
CLARY CORP. SAN GABRIEL, CALIF. - U.S.A.	71503
COASTAL DYNAMICS CORP. VENISE, CALIF. - U.S.A.	04211
COLONIAL STEEL, DIV. OF VANADIUM ALLOYS STEEL CO. MONACA, PA. - U.S.A.	71570
COMPAGNIA ITALIANA TUBI METALLICI FLESSIBILI - S.p.A. CORSO VERCELLI 501 10156 TORINO - ITALIA	A0614
COMPUTING DEVICES OF CANADA LTD. OTTAWA, ONTARIO, CANADA - U.S.A.	05257
CONSOLIDATED CONTROLS CORP. 15 DURANT AVE BETHEL, CONN. - U.S.A.	02750
CONSOLIDATED CONTROLS CORP. EL SEGUNDO, CALIF. - U.S.A.	09790
CONTROL PRODUCTS INC. HANOVER, N.J. - U.S.A.	81901
CONTROLS CO. OF AMERICA, CONTROL SWITCH DIV. FOLCROFT, PA. - U.S.A.	81640
COOK ELECTRIC CO. MORTON GROVE, ILL. - U.S.A.	71688
CORBIN CABINET LOCK DIV. OF ENHART CORP. NEW BRITAIN, CONN. - U.S.A.	14608
CUTLER-HAMMER INC. MILWAUKEE, WIS. - U.S.A.	15605
DALE ELECTRINICS INC. COLUMBUS, NEBR. - U.S.A.	91637
DARCHEM ENGINEERING LTD. STOCKTON-ON TEES CO. DURHAM - ENGLAND	K0510
DELCO-REMY DIV. OF GENERAL MOTORS CORP. ANDERSON, IND. - U.S.A.	16764
DEPARTMENT OF THE AIR FORCE WASHINGTON, D.C. - U.S.A.	80049
DEUTSCH CC ELECTRONIC COMPONENTS DIV. BANNING, CALIF. - U.S.A.	11139
DEUTSCH FASTENER CORP. LOS ANGELES, CALIF. - U.S.A.	08524
DOWNEY MACHINE CO. INC. DOWNEY, CALIF. - U.S.A.	98315
DUNLOP RUBBER CO. LTD. LONDON - ENGLAND	U0025
DUTTENHOEFER GOTTLIEB HASSLOCH PFALZ - GERMANY	D0245
DZUS FASTENER CO. INC. WEST ISLIP, N.Y. - U.S.A.	72794
ELASTIC STOP NUT CORP. OF AMERACE ESNA CORP. UNION, N.J. - U.S.A.	72962
ELECTRONIC RESOURCES INC. LOS ANGELES, CALIF. - U.S.A.	72152
ELECTRONIC SPECIALTY CO., EEMCO DIVISION LOS ANGELES, CALIF. - U.S.A.	72121
ELECTRONIC SPECIALTY CO. PORTLAND ELECTRONICS DIVISION PORTLAND, ORE. - U.S.A.	98927
ELETTRONICA - S.p.A. VIA TIBURTINA 650 00159 ROMA - ITALIA	A1997
F.E.M.E. - S.p.A. VIALE CERTOSA 1 20149 MILANO - ITALIA	A0299
F.I.A.R. C.G.E. DIVISIONE ELETTRONICA PROFESSIONALE VIA G.B. GRASSI 93 20157 MILANO - ITALIA	A0084
F.I.M.A.C. FABBR. ITAL. MECC. ARIA COMPRESSA VIA I. PETITTI 18 20149 MILANO - ITALIA	A1620
FACE STANDARD - S.p.A. VIA L. BODIO 33 20158 MILANO - ITALIA	A0073
FAFNIR BEARING CO., DIVISION OF TEXTRON INC. NEW BRITAIN, CONN. - U.S.A.	21335
FAIRCHILD HILLER CORP. REPUBLIC AVIATION DIVISION CONKLIN ST. FARMINGDALE LONG INSLAND, N.Y. - U.S.A.	77751
FAREM - S.r.l. VIA G. DI VITTORIO 317 20099 SESTO SAN GIOVANNI (MILANO) - ITALIA	A1582
FEDERAL SPECIFICATIONS PROMULGATED BY GENERAL SERVICES ADMINISTRATION WASHINGTON, D.C. - U.S.A.	81348
FENWAL INC. ASHLAND, MASS. - U.S.A.	73168
FENWICK - AVIATION S.A. PARIS - FRANCE	F1598
FERRO METAL LTD. 2300 RUE GERNEAU VILLE JACQUES CARTIER, QUEBEC - CANADA	35346
FILTRON CO. INC., THE L.I., N.Y. - U.S.A.	81831
FIRESTONE COATED FABRICS CO., DIV. OF FIRESTONE TIRE AND RUBBER CO. AKRON, OHIO - U.S.A.	05476
FORREST WAGNIERE ENGINEERING CO. DIVISION OF CONAIR INC. LOS ANGELES, CALIF. - U.S.A.	95950
FULLER BRUSH CO., INDUSTRIAL DIVISION HARTFORD, CONN. - U.S.A.	73425
GAR - KENYON INSTRUMENTS INC. BREWSTER, N.Y. - U.S.A.	26044
GARRET CORP. THE 9851 SEPULVEDA BLVD LOS ANGELES, CALIF. - U.S.A.	72599

Nome ed indirizzo	Codice
GARRETT MFG. LIT. REXDALE, ONTARIO - CANADA	07217
GENERAL ELECTRIC CO., A/C ENGINE GROUP CINCINNATI, OHIO - U.S.A.	07482
GENERAL ELECTRIC CO., AEROSPACE ELECTRICAL EQUIPMENT DEPT. AEROSPACE INSTRUMENT BUSINESS SECTION WILMINGTON, MASS. - U.S.A.	97424
GENERAL ELECTRIC CO., AVIONIC CONTROLS DEPT. BINGHANTON, N.Y. - U.S.A.	89954
GENERAL ELECTRIC CO. GENERAL PURPOSE MOTOR DEPT FORT WAYNE, IND. - U.S.A.	88422
GENERAL ELECTRIC CO. MINIATURE LAMP DEPT. CLEVELAND, OHIO - U.S.A.	08806
GENERAL ELECTRIC CO., RESIDENTIAL DISTRIBUTION TRANSFORMER DEPT. OAKLAND, CALIF. - U.S.A.	93517
GENERAL ELECTRIC CO. 1 RIVER ROAD SCHENECTADY, N.Y. - U.S.A.	24446
GENERAL INSTRUMENT CORP. NEWARK, N.J. - U.S.A.	72699
GENERAL NUCLEONICS DIV. TYCO LABORATORIES INC. POMONA, CALIF. - U.S.A.	24494
GIANNINI VOLTEX CORP. WHITTIER, CALIF. - U.S.A.	24727
GLAR-BAN CORP. BUFFALO, N.Y. - U.S.A.	07204
GLASSCO INSTRUMENT CO. PASADENA, CALIF. - U.S.A.	03936
GLOBAL SYSTEM INC. ROCKET JET/AIRBONE RESEARCH DIVISION GLENDALE, CALIF. - U.S.A.	31441
GLOBE ELECTRICAL MFG CO. GARDENA, CALIF. - U.S.A.	99028
GOODRICH B.F. CO. AEROSPACE AND DEFENSE PRODUCTS DIV. AKRON, OHIO - U.S.A.	03481
GOODRICH BF CO., THE AKRON, OHIO - U.S.A.	25472
GOODYEAR TIRE AND RUBBER CO. AKRON, OHIO - U.S.A.	73842
GRAYHILL INC. LA GRANGE, ILL. - U.S.A.	81073
GREAT LAKES MFG., DIV. OF LAVAL TURBINE CALIFORNIA INC. CLEVELAND, OHIO - U.S.A.	81833
GRIMES MFG. CO. URBANA, OHIO - U.S.A.	72914
GROOV-PIN CORP. RIDGFIELD, N.J. - U.S.	73957
HARTWELL CORP. LOS ANGELES, CALIF. - U.S.A.	83014
HASKEL ENGINEERING AND SUPPLY CO. BURBANK, CALIF. - U.S.A.	81400
HAYDON A W. CO. WATERBURY, CONN. - U.S.A.	82227
HAYDON SWITCH AND INSTRUMENT INC. WATERBURY, CONN. - U.S.A.	02005
HAZELTINE CORP. LITTLE NECK, N.Y. - U.S.A.	80249
HINEMANN ELECTRIC CO. TRENTON, N.J. - U.S.A.	74193
HI-SHEAR CORP. TORRANCE, CALIF. - U.S.A.	73197
HITCO CORP. GARDENA, CALIF. - U.S.A.	78741
HONEYWELL INC. MINNEAPOLIS, MINN. - U.S.A.	40931
HONEYWELL INC. AEROSPACE MINNEAPOLIS DIV. MINNEAPOLIS, MINN. - U.S.A.	94580
HONEYWELL INC., MICRO SWITCH DIVISION FREEPORT, ILL. - U.S.A.	91929
HUCK MFG CO. DETROIT, MICH. - U.S.A.	29666
HYDRA ELECTRIC BURBANK, CALIF. - U.S.A.	98505
HYDRAULIC RESEARCH AND MFG. CO. VALENCIA, CALIF. - U.S.A.	81873
HYDRO-AIRE DIV. CRANE CO. BURBANK, CALIF. - U.S.A.	81982
ILLINOIS TOOLS WORKS INC. CHICAGO, ILL. - U.S.A.	30323
ILLINOIS TOOL WORKS INC., SHAKERPROOF DIVISION ELGIN, ILL. - U.S.A.	78189
INDUSTRIAL DESIGN LABORATORIES CULVER CITY, CALIF. - U.S.A.	84987
INDUSTRIAL RETAINING RING CO. CORDIER ST. IRVINGTON, N.J. - U.S.A.	97464
IRVIN INDUSTRIES INC. GARDENA, CALIF. - U.S.A.	07718
ITALIA - S.p.A. VIA PIAVE 11 21019 SOMMA LOMBARDO (VARESE) - ITALIA	A0355
ITT CANNON ELECTRIC INC. LOS ANGELES, CALIF. - U.S.A.	71468
ITT FEDERAL LABORATORIES, DIV. OF INTERNATIONAL TELEPHONE AND TELEGRAPH CORP. CLIFTON, N.J. - U.S.A.	90348
ITT AEROSPACE CONTROLS BURBANK, CALIF. - U.S.A.	73760
ITT GILFILLAN INC. VAN NUYS, CALIF. - U.S.A.	24930
ITT INDUSTRIAL PRODUCTS DIVISION SAN FERNANDO, CALIF. - U.S.A.	02859
JANCO CORP. BURBANK, CALIF. - U.S.A.	91812
JAMES PONS AND CLARK DIV. CIRCLE SEAL CORP. ANAHEIN, CALIF. - U.S.A.	91816
JAY - EL PRODUCTS INC. GARDENA, CALIF. - U.S.A.	08719
JOINT ELECTRONIC TYPE DESIGNATION SYSTEM WASHINGTON, D.C. - U.S.A.	80058
JORDAN ELECTRONICS DIVISION OF VICTOREEN INSTRUMENT CO. INC. ALHAMBRA, CALIF. - U.S.A.	01878

Nome ed indirizzo	Codice
KAISER AEROSPACE AND ELECTRONICS CORP. EMBE GEAR DIVISION GLENDALE, CALIF. - U.S.A.	96212
KIMBALL AND CO. LTD. LONDON - ENGLAND	K2493
KING MACHINE AND MFG. CO. BURBANK, CALIF. - U.S.A.	05089
KOEHLER-DAYTON INC. DAYTON, OHIO - U.S.A.	75361
KOLLSMAN INSTRUMENT CORP. ELMHURST, N.Y. - U.S.A.	89944
L.E.M.A.R. - S.r.l. LAB. ELETTROMECCANICO APPARATI RADIO VIA FILIPPO MARCHETTI 23 00199 ROMA - ITALIA	A3051
LAMP INDUSTRY FOR USE WITH INDUSTRY DESIGNATIONS AND ABBREVIATIONS FOR LAMPS	08108
LANGOON MFG. CO. GLENDALE, CALIF. - U.S.A.	83548
LEACH CORP., CONTROLS DIVISION AZUSA, CALIF. - U.S.A.	96261
LEACH CORP., RELAY DIVISION LOS ANGELES, CALIF. - U.S.A.	35344
LEAR SIEGLER INC., INSTRUMENT DIVISION GRAND RAPIDS, MICH. - U.S.A.	35351
LEECRAFT MFG. CO. INC. LONG ISLAND CITY, N.Y. - U.S.A.	95263
LEITZ ERNEST CANADA LTD. MIDLANC, ONTARIO - CANADA	36126
LEWIS ENGINEERING CO., THE NAUGATUCK, CONN. - U.S.A.	35918
LITTON PRECISION PRODUCT VIA ARCO 4 20121 MILANO - ITALIA	A0000
LITTON SYSTEMS INC., GUIDANCE AND CONTROL SYSTEMS DIV. WOODLAND HILLS, CALIF. - U.S.A.	06481
LOCKHEED-CALIFORNIA CO. A DIVISION OF LOCKHEED A/C CORP. BURBANK, CALIF. - U.S.A.	36659
LOGIC - S.a.s. di MARCHI G. & C. VIA ZURETTI 33 20125 MILANO - ITALIA	A2829
LORD MFG. CO., DIV. OF LORD CORP. ERIE, PA. - U.S.A.	76005
LSI SERVICE CORP. LOS ANGELES DIV. LOS ANGELES, CALIF. - U.S.A.	15411
MAGNAGHI NAPOLI - S.p.A. VIA GALILEO FERRARIS 76 80142 NAPOLI - ITALIA	A0809
MAGNETI MARELLI - S.p.A. FABBRICA ITALIANA VIA GUASTALLA 2 20122 MILANO - ITALIA	A2547
MARCO OAK INDUSTRIES INC. ANAHEIM, CALIF. - U.S.A.	87034
MARQUARDT CORP., OGDEN DIV. OGDEN, UTAH - U.S.A.	05151
MARTIN BAKER AIRCRAFT CO. LTD. UXBRIDGE, MIDDLESEX - ENGLAND	U1604

Nome ed indirizzo	Codice
MASON ELECTRIC CO. INC. LOS ANGELES, CALIF. - U.S.A.	81579
MASTER SPECIALTIES CO. COSTA MESA, CALIF. - U.S.A.	96182
MAUREY MFG. CO. 2907-23 SOUTH WABASH AVE CHICAGO, ILL. - U.S.A.	76241
MAUREY INSTRUMENT CO. CHICAGO, ILL. - U.S.A.	03942
MENASCO MFG. CO. BURBANK, CALIF. - U.S.A.	75662
MICROTECNICA, S.p.A. VIA MADAMA CRISTINA 149 10126 TORINO - ITALIA	A0076
MILITARY SPECIFICATIONS PROMULGATED BY STANDARDIZATION DIV. WASHINGTON, D.C. - U.S.A.	81349
MILITARY STANDARDS PROMULGATED BY STANDARDIZATION DIV. DIRECTORATE OF LOGISTICS SERVICES D.S.A. WASHINGTON, D.C. - U.S.A.	96906
MISSIMERS INC. GLENDALE, CALIF. - U.S.A.	04286
MONA SECONDO OFFICINE AERONAUTICHE 21019 SOMMA LOMBARDO (VARESE) - ITALIA	A0303
MOTOROLA SEMICONDUCTOR PRODUCTS INC. PHOENIX, ARIZ. - U.S.A.	04713
MPB CORP. PARK KEENE, N.H. - U.S.A.	40920
NARDI - S.p.A. COSTRUZ. AERONAUTICHE VIALE CONSERVATORIO 11 20122 MILANO - ITALIA	A1384
NATIONAL AEROSPACE STANDARDS COMMITTEE, AERONAUTICAL INDUSTRIES ASSOCIATION OF AMER. WASHINGTON, D.C. - U.S.A.	80205
NATIONAL LOCK WASHER DIV. CHARTER WIRE SOMERVILLE, N.J. - U.S.A.	76665
NATIONAL SCREW AND MFG. CO. MENTOR, OHIO - U.S.A.	76689
NATIONAL TELEPHONE SUPPLY CO. INC. CLEVELAND, OHIO - U.S.A.	76691
NATIONAL UTILITIES CORP. MONROVIA, CALIF. - U.S.A.	94581
NEGRETTI AND ZAMBRA LTD. AYLESBURY BUCKS - ENGLAND	K0095
NOBLES INDUSTRIES INC. ST. PAUL, MINN. - U.S.A.	76793
NORTH AMERICAN ROCKWELL CORP., AUTONETICS DIV. ANAHEIM, CALIF. - U.S.A.	94756
NUCLEONIC CO. OF AMERICA BROOKLYN, N.Y. - U.S.A.	98689
NUOVA S. GIORGIO - S.p.A. VIA L. MANARA 2 16154 GENOVA SESTRI - ITALIA	A2233
O.E.C.O. CORP. PORTLAND, OREGON - U.S.A.	95266
O.M.A. - DI TONTI UMBERTO & C. - S.a.s. OFFICINE MECCANICHE AERONAUTICHE VIA DELL'AEROPORTO 06034 FOLIGNO (PERUGIA) - ITALIA	A3004

Nome ed indirizzo	Codice
O.T.E. - S.p.A. OFF. TOSCANE ELETTRONICHE VIA DI CACIOLLE 15 50127 FIRENZE - ITALIA	A0212
OFFICINE AERONAVALI - S.p.A. VIALE S. MARCO 1757 30124 VENEZIA - ITALIA	A3005
OHMITE MFG. CO. SKOKIE, ILL. - U.S.A.	44655
OLEODINAMICA MAGNAGHI - S.p.A. VIA STAMIRA D'ANCONA 27 20127 MILANO - ITALIA	A0359
OLIN CORP., ASSOCIATED PRODUCTS OPERATIONS EAST ALTON, ILL. - U.S.A.	80236
OLIN MATHIESON CHEMICAL CORP. NEW HAVEN, CONN. - U.S.A.	89945
OMI - S.p.A. VIA DELLA VASCA NAVALE 81 00146 ROMA - ITALIA	A1996
OLYMPIC PLASTICS CO. DIV. OMNETIC INDUSTRIES INC. LOS ANGELES, CALIF. - U.S.A.	81872
ORDNANCE CORPS WASHINGTON, D.C. - U.S.A.	00000
PACIFIC SCIENTIFIC CO. ANAHEIM, CALIF. - U.S.A.	45402
PACKARD BELL ELECTRONICS CORP., SPACE AND SYSTEMS DIV. NEWBURY PARK, CALIF. - U.S.A.	45413
PADWAY AIRCRAFT PRODUCTS INC. SUN VALLEY, CALIF. - U.S.A.	98439
PARKERHANNIFIN CORP. AEROSPACE GROUP LOS ANGELES, CALIF. - U.S.A.	92003
PARKER SEAL CO. DIV. OF PARKERHANNIFIN CORP. CULVER CITY, CALIF. - U.S.A.	83259
PEACOCK ENGINEERING CO. DIV. OF MONOGRAM INDUSTRIES NORWALK, CALIF. - U.S.A.	91379
PENN KEYSTONE CORP. ANSONIA, CONN. - U.S.A.	03034
PENNWALT CORP. S.S. WHITE DIV. PHILADELPHIA, PA. - U.S.A.	79555
PENNWALT CORP. S.S. WHITE INDUSTRIAL DIVISION OAK BROOK, ILL. - U.S.A.	57711
PENNWALT CORP. S.S. WHITE EQUIPMENT DIVISION NEW YORK, N.Y. - U.S.A.	65301
PIAGGIO RINALDO - S.p.A. INDUSTRIE AERONAUTICHE E MECC. VIALE BRIGATA BISAGNO 14 16129 GENOVA - ITALIA	A0189
PIONEER PARACHUTE CO. INC. MANCHESTER, CONN. - U.S.A.	77292
PIRELLI - S.p.A. PIAZZA DUCA D'AOSTA 3 20124 MILANO - ITALIA	A0043
PNEUDRAULICS INC. MONTCLAIR, CALIF. - U.S.A.	06177
PRECISION RUBBER PRODUCTS CORP. DAYTON, OHIO - U.S.A.	86579
PROTECTIVE CLOUSURES CO. INC. CA PLUGS DIV. BUFFALO, N.Y. - U.S.A.	99017
PUROLATOR INC. RAHWAY, N.J. - U.S.A.	81321
RADIO CORP. OF AMERICA NEW YORK, N.Y. - U.S.A.	49671
RAINA & C. - S.n.c. CORSO TORINO 14 10098 RIVOLI (TORINO) - ITALIA	A0304
RAMSEY CORP., MANCHESTER-WEIDMAN ST. LOUIS, MO. - U.S.A.	80756
RANDALL CO. INC. LOS ANGELES, CALIF. - U.S.A.	99470
RATIGAN ELECTRONICS INC. LOS ANGELES, CALIF. - U.S.A.	99684
RAYTHEON CO. LEXINGTON, MASS. - U.S.A.	49956
REPUBLIC MFG. CO. CLEVELAND, OHIO - U.S.A.	86768
RESISTOFLEX CORP. ROSELAND, N.J. - U.S.A.	50599
REVERE CORP. OF AMERICA WALLINGFORD, CONN. - U.S.A.	50625
REYNOLDS METALS CO. LOUISVILLES, KY. - U.S.A.	01484
REX CHAINBELT INC. BEARING DIV. DOWNERS GROVE, ILL. - U.S.A.	77896
REX CHAINBELT INC. CAMLOC DIV. PARAMUS, N.J. - U.S.A.	71286
RHODES JAMES H. AND CO. CHICAGO, ILL. - U.S.A.	77786
RIBALI - S.r.l. VIA COSIMO DEL FANTE 2 20122 MILANO - ITALIA	A2836
ROBINTECH INC., ELECTRO MECHANICAL DIVISION BURBANK, CALIF. - U.S.A.	26624
ROCKER SOLENOID CO. HARBOR CITY, CALIF. - U.S.A.	07797
ROSAN INC. NUWPORT BEACH, CALIF. - U.S.A.	83324
ROSEMOUNT ENGINEERING CO. MINNEAPOLIS, MINN. - U.S.A.	04274
ROVALCO CONTROLS HARBOR CITY, CALIF. - U.S.A.	07940
ROYLIN A DIVISION OF THE RUCKER COMPANY GLENDALE, CALIF. - U.S.A.	86831
RUBBER TECK INC. GARDENA, CALIF. - U.S.A.	98159
RUSSEL JOHN M., DIV. OF RISDON MFG. CO. NAUGATUCK, CONN. - U.S.A.	92586
S.A.G.A. PIAZZA DUCA D'AOSTA 20124 MILANO - ITALIA	A0305
S.I.E.M. - S.p.A. VIA MARENCO 25 10126 TORINO - ITALIA	A2297
S.I.R.E.M. - S.r.l. IMPIANTI ELETTROMECCANICI VIA E. GIOVENALE 55 00171 ROMA - ITALIA	A0210

Nome ed indirizzo	Codice
SABCA - S.A. BELGE DE CONSTRUCTIONS AERONAUTIQUES HAREN/BRUXELLES - BELGIUM	B0113
SACA - S.p.A. SOC. COSTRUZIONI AERONAVALI VIA A. IMPERATORE 16 73100 LECCE - ITALIA	A2510
SACRAMENTO AIR MATERIAL AREA MCCLELLAN AIR FORCE BASE SACRAMENTO, CALIF. - U.S.A.	98749
SANTA ANITA ENGINEERING CO. SAN FERNANDO, CALIF. - U.S.A.	98817
SARGENT INDUSTRIES INC., AIRITE DIVISION EL SEGUNDO, CALIF. - U.S.A.	81896
SARGENT INDUSTRIES INC. HANSEN - LYNN DIV. BURBANK, CALIF. - U.S.A.	82833
SARGENT INDUSTRIES INC., STILLMAN RUBBER DIVISION CULVER CITY, CALIF. - U.S.A.	95272
SARKES TARZIAN INC. BROADCAST EQUIPMENT DIVISION BLOOWINGTON, IND. - U.S.A.	84970
SAVARA - S.p.A. COSTRUZIONI MECCANICHE VIALE RISORGIMENTO 5 10092 BEINASCO (TORINO) - ITALIA	A0310
SCHULZ RUBBER PRODUCTS SAN GABRIEL, CALIF. - U.S.A.	17991
SCHULZ TOOL AND MFG. CO. SAN GABRIEL, CALIF. - U.S.A.	82267
SEAMAN PRODUCTS OF CALIFORNIA SYLMAR, CALIF. - U.S.A.	98900
SEASTROM MFG. CO. INC. GLENDALE, CALIF. - U.S.A.	86928
SEATTLE RETREAD SEATTLE, WASH. - U.S.A.	86931
SELENIA - S.p.A. INDUSTRIE ELETTRONICHE ASSOCIATE VIA TIBURTINA 00131 ROMA - ITALIA	A1615
SHAMBAN W. S. AND CO. NEWBURY PARK, CALIF. - U.S.A.	97820
SHERMAN H. B. MFG. CO. BATTLE CREEK, MICH. - U.S.A.	77860
SHERWOOD INDUSTRIES FLEXCO DIV. BELL GARDENS, CALIF. - U.S.A.	99135
SHUR-LOK CORP. SANTA ANA, CALIF. - U.S.A.	97393
SIAI - MARCHETTI - S.p.A. VIALE INDIPENDENZA 4 21019 SESTO CALENDE (VARESE) - ITALIA	A1252
SIEMENS - S.p.A. PIAZZALE ZAVATTARI 12 20149 MILANO - ITALIA	A0062
SONOTONE CORP. ELMSFORD, N.Y. - U.S.A.	55933
SOUTHWEST PRODUCTS CO. MONROVIA, CALIF. - U.S.A.	81376
SOUTH WIND, DIVISION OF STEWART-WARNER CORP. INDIANAPOLIS, IND. - U.S.A.	78385
SPACE FLEX CORP. LOS ANGELES, CALIF. - U.S.A.	16357
SPERRY FLIGHT SYSTEMS, DIV. OF SPERRY RAND CORP. PHOENIX, ARIZ. - U.S.A.	07187
SPRAGUE ELECTRIC CO. NORTH ADAMS, MASS. - U.S.A.	56289
SPRAGUE ENGINEERING, A TELEDYNE CO. GARDENA, CALIF. - U.S.A.	89307
STACO INC. DAYTON, OHIO - U.S.A.	83008
STANDARD ELECTRONIC CORP. STANFORD, CONN. - U.S.A.	53750
STANDARD PRESSED STEEL CO. JENKINTOWN, PA. - U.S.A.	56878
STANDARD PRESSED STEEL CO. SANTA ANA, CALIF. - U.S.A.	80539
STANLEY-JUDD, DIVISION OF STANLEY WORKS WALLINGFORD, CONN. - U.S.A.	75005
STANLEY WORKS NEW BRITAIN, CONN. - U.S.A.	57068
STEINTHAL M. AND CO. INC. NEW YORK, N.Y. - U.S.A.	87567
STERER ENGINEERING AND MFG. CO. LOS ANGELES, CALIF. - U.S.A.	99643
STEWART-WARNER ELECTRONICS, DIVISION OF STEWART-WARNER CORP. CHICAGO, ILL. - U.S.A.	98738
STRATOFLEX INC. FORT WORTH, TEX. - U.S.A.	98441
STRATOFLEX INC. EL SEGUNDO, CALIF. - U.S.A.	03925
STRAUB F. A. INC. BURBANK, CALIF. - U.S.A.	18616
STURM RUGER AND CO. INC. SOUTH PORT, CONN. - U.S.A.	07210
SUDDEN SERVICE GLASS CO. LOS ANGELES, CALIF. - U.S.A.	97925
SUMBEAM ELECTRONICS, DIV. JOHN OSTER MFG. CO. FORT LAUDERDALE, FLA. - U.S.A.	77045
SUPERIOR ELECTRIC CO. BRISTOL, CONN. - U.S.A.	58474
SWEETLAND ENGINEERING CO. PASADENA, CALIF. - U.S.A.	99895
TA. MFG. CORP. LOS ANGELES, CALIF. - U.S.A.	84971
TALLEY CORPORATION THE LEWBURY PARK, CALIF. - U.S.A.	98889
TED MFG. CORP. JOHNSON DR SHAWNEE MISSION, KANSAS - U.S.A.	05209
TELEDYNE INC., MCCORMICK - SELPH DIV. HOLLISTER, CALIF. - U.S.A.	06331
TELEDYNE INC. RADAR RELAY DIVISION SANTA MONICA, CALIF. - U.S.A.	00712
TELEDYNE SYSTEMS CO., CONTROL SYSTEMS DIVISION EL SEGUNDO, CALIF. - U.S.A.	98571
TELEFLEX INC. NORTH WALES, PA. - U.S.A.	78710
TELEFON FABRIK AUTOMATIC A.S. COPENHAGEN K. - DANMARK	R0482

Nome ed indirizzo	Codice
TEXAS INSTRUMENTS INC. CONTROL PRODUCTS DIVISION ATTLEBORO, MASS. - U.S.A.	82647
TEXTRON INC., ACCESSORY PRODUCTS CO. DIVISION WITTIER, CALIF. - U.S.A.	96124
TINKEN ROLLER BEARING CO. CANTON, OHIO - U.S.A.	60038
TINNERMAN PRODUCTS INC. CLEVELAND, OHIO - U.S.A.	78553
TITEFLEX, DIV. OF ATLAS CORP. SPRINGFIELD, MASS. - U.S.A.	78570
TORRINGTON CO., THE TORRINGTON, CONN. - U.S.A.	60380
TRANSCO PRODUCTS INC. VENICE, CALIF. - U.S.A.	82152
TRIDAIR INDUSTRIES FASTENER DIV. TORRANCE, CALIF. - U.S.A.	29372
TRW MECHANICAL PRODUCTS DIV. CLEVELAND, OHIO - U.S.A.	59875
U. S. BEARING DIV. OF NETWORKS ELECTRONIC CORP. CHATSWORTH, CALIF. - U.S.A.	02758
UNITED AIRCRAFT CORP., HAMILTON STANDARD DIVISION WINDSOR LOCKS, CONN. - U.S.A.	73030
UNITED-CARR INC. BOSTON, MASS. - U.S.A.	61864
UNITED CONTROL CORP. AEROSPACE DIVISION REDMOND, WASH. - U.S.A.	97896
UNITED STATES RADIUM CORP. NORTH HOLLYWOOD, CALIF. - U.S.A.	07199
VALCOR ENGINEERING CORP. KENILWORTH, N.J. - U.S.A.	96487
VARTA DEAC GMBH FRANKFURT MAIN - GERMANY	D9722
VDO TACHOMETER WERKE A SCHINDLING GMBH FRANKFURT MAIN - GERMANY	D4278
VEAM VIA MONTEGRAPPA 21 20020 ARESE (MILANO) - ITALIA	A1587
VICKERS AEROSPACE DIVISION OF VICKERS DIVISION OF SPERRY RAND CORP. TROY, MICH. - U.S.A.	62983
VIKING INDUSTRIES INC. CHATSWORTH, CALIF. - U.S.A.	05574
VITALE ETTORE INDUSTRIA GOMMA VIA PONTI ROSSI 230 80141 NAPOLI - ITALIA	A2859
WAGNER ELECTRIC CORP., TUNGSOL DIVISION LIVINGSTONE, N.J. - U.S.A.	94988
WALTHAM PRECISION INSTRUMENT INC., WALTHAM DIVISION WALTHAM, MASS. - U.S.A.	79300
WEATHERHEAD CO., THE CLEVELAND, OHIO - U.S.A.	79470
WELLS INDUSTRIES CORP. SANTA ANA, CALIF. - U.S.A.	07166
WEMAC CO. SANTA ANA, CALIF. - U.S.A.	83564
WESTINGHOUSE AIR BRAKE CO., SIGNAL AND COMMUNICATIONS DIV. SWISSVALE, PA. - U.S.A.	61775
WESTINGHOUSE ELECTRIC CORP., LAMP DIVISION BLOOMFIELD, N.J. - U.S.A.	65083
WESTON HYDRAULICS LTD. VAN NUYS, CALIF. - U.S.A.	79294
WESTON INSTRUMENTS INC., WESTON INSTRUMENTS DIVISION NEWARK, N.J. - U.S.A.	65092
WHITE S.S. CO. 211-17 S. 12TH ST. PHILADELPHIA, PA. - U.S.A.	79555
WHITTAKER CORP., TECHNICAL PRODUCTS DIV. CHATSWORTH, CALIF. - U.S.A.	79318
WICHITA MACHINE TOOL CO. WICHITA, KANS. - U.S.A.	79320
WIGGINS E.B. INC. LOS ANGELES, CALIF. - U.S.A.	79326
WILSON JONES CO. ELIZABETH, N.J. - U.S.A.	82221
WINCHESTER ELECTRONICS DIVISION LITTON INDUSTRIES INC. OAKVILLE, CONN. - U.S.A.	81312
WOOD ELECTRIC CORP. DANVERS, MASS. - U.S.A.	79405
WOODWARD GOVERNOR CO. ROCKFORD, ILL. - U.S.A.	66503

4. **Indice dei riferimenti schematici** (riferimento alla Sezione IV).

4.1. Questo indice elenca tutte le voci che, nella Sezione II e nei relativi schemi, sono state designate con una sigla (numero, lettere, ecc.) di riferimento.

4.2. L'elencazione è disposta nelle seguenti colonne:

4.2.1. Colonna « **Codice di Riferimento** ». Comprende in **ordine alfa-numerico**, tutte le sigle di riferimento incluse nella Sezione II e negli schemi.

4.2.2. Colonna « **NDR** ». Comprende solamente i Numeri delle Parti relativi alle varie sigle elencate nella colonna « Codice di Riferimento » (come precisato nel precedente paragrafo 2.2.2.).

4.2.3. Colonna « **Figura e particolare** ». (Come dal precedente paragrafo 2.2.1.).

5. Complessivi trattati in altre pubblicazioni.

5.1. I seguenti complessivi, elencati nella Sezione II, sono trattati in dettaglio dalle pubblicazioni tecniche a fianco indicate:

COMPLESSIVO NDR	PUBBLICAZIONE	COMPLESSIVO NDR	PUBBLICAZIONE	COMPLESSIVO NDR	PUBBLICAZIONE
AC1000-10	T.O. 9H3-3-44-3	F1001-1	T.O. 8S2-3-61-3	V226004	T.O. 9H8-4-154-3
AC1000-6	T.O. 9H3-3-44-3	F60A0224	T.O. 6J15-2-153-3	V3900-01	T.O. 9P5-14-38-3
AC1914-6	T.O. 9H3-3-44-3	GG112B2	T.O. 5A11-2-43-4	WA201-3	T.O. 9P5-15-2-3
AL58K1001A15	T.O. 8S2-2-42-3	GG127B2	T.O. 5A11-2-43-4	WSR17	L.R. 5-14404-224-4
AG1882-3	LR12-14404-356-3	GG128B2	T.O. 5A11-2-43-4	W18241	—
ARD446-1	T.O. 11A6-1-7	IND6AMOD1THRU7	LR5-14404-225-4	0-3572	AA9-0-3572-4
AT-741A	—	JG130A79	LR6-14404-275-4	0-7309	AA9-0/7309-4
AV16B1566D2A	T.O. 6J15-9-25-3	JG222B1	—	0-7310	AA9-0/7309-4
AV16B1941D	—	JG310B2	T.O. 5L6-3-37-4	0-7317	AA9-0/7317-4
A2310	T.O. 5F8-4-14-3	KL60-000-48-2-7	CR5-104-904-3	0-7318	AA9-0/7318-4
A303-50T1	T.O. 9H1-2-20-3	LAM10-01	—	0-7319	AA9-0/7319-4
A62122	T.O. 9H8-2-157-3	MA300H	T.O. 8D2-3-4	01X206950	T.O. 12P4-4-9-3
A62195	T.O. 9H8-2-159-3	MBCJ2086	AA13-IQ7A-4	0628C3110	LR5-14404-231-3
A70153-1	T.O. 9H8-26-13-13	MBEU1025F5	AA13-IQ7A-4	0728C3111	LR5-14404-232-3
BG158C5	T.O. 5A7-3-6-4	MBEU1033GQ5	AA13-IQ7A-4	10-954-1	T.O. 6J15-7-20-3
BG163D2	T.O.5A7-3-7-4	MBEU1054GQ5	AA13-IQ7A-4	10C117	—
CB349-110	T.O. 15H3-2-37-13	MBEU1055GQ5	AA13-IQ7A-4	1000-00-000-5	—
CG107A4	T.O. 5A13-3-8-4	MBEU1071RU	AA13-IQ7A-4	1008520-5	T.O. 9H8-26-9-3
CG111A1	T.O. 11W1-10-2-3	MBEU1104RU	AA13-IQ7A-4	1008970-4	T.O. 9H8-15-23-13
CG93A2	T.O. 16C1-27-8-4	MBEU1387QG5	AA13-IQ7A-4	101-152-5	T.O. 15A14-2-3
COM2MOD1THRU5	LR5-14404-226-4	MBEU1434	AA13-IQ7A-4	1011915-3-1	T.O. 9H1-2-26-3
C114606-1	—	MBEU1493GQ5	AA13-IQ7A-4	1012221-2	CR9-104-905-3
C114606-2	—	MBEU1496GQ5	AA13-IQ7A-4	1019-1	T.O. 8S2-3-78-3
C114650-1	—	MBEU1580GQ5ISSUE8	AA13-IQ7A-4	102168-1	T.O. 15A1-4-13-13
C114650-2	—	MBEU1583GQ5	AA13-IQ7A-4	102294-1	T.O. 15A1-4-13-4
C115553-2-1	—	MBEU1585GQ5	AA13-IQ7A-4	102294-2-1	T.O. 15A1-4-13-4
C19522-22-007	T.O. 5F8-2-35-4	MBEU1597GQ5	AA13-IQ7A-4	103098-530-1	T.O. 15A2-9-10-13
C2F	T.O. 5N3-3-6-3	MBEU16650	AA13-IQ7A-4	103134-330	T.O. 15A2-9-13-23
DES917A	T.O. 10A1-2-3-4	MBEU1677GQ5	AA13-IQ7A-4	10520550	T.O. 11P3-3-4-3
DV307-1001	T.O. 9P5-5-83-3	MBEU2250RU	AA13-IQ7A-4	10520971	T.O. 11P6-24-3
DG10F1	T.O. 5L23-2-2	MBEU2358RU	AA13-IQ7A-4	1052207G6	T.O. 12R5-4-47-4
D10250-5	T.O. 8C14-4-10-3	MBEU26434	AA13-IQ7A-4	110528-2	T.O. 12P4-2APX46-14
D1227-3	T.O. 8A1-8-39-4	MBEU2711DP	AA13-IQ7A-4	106762-1	T.O. 15A8-5-25-3
D1227-4	T.O. 8A1-8-39-4	MBEU29231	AA13-IQ7A-4	107132A1	AA11-128577A1-4
D1228-3	T.O. 8D1-8-196-4	MBEU3325	AA13-IQ7A-4	107134A1	AA11-128577A1-4
D2198-1	T.O. 8A1-1-505	MBEU5029PA	AA13-IQ7A-4	107137A1	AA11-128577A1-4
D2198-2	T.O. 8A1-1-505	MBEU628GQ5	AA13-IQ7A-4	107139A1	AA11-128577A1-4
D2201-1	T.O. 8A1-8-39-4	MBEU7536	AA13-IQ7A-4	107147A1	AA11-128577A1-4
D2201-2	T.O. 8A1-8-39-4	MBEU820GQ5	AA13-IQ7A-4	107149A1	AA11-107149A1-4
D2202	T.O. 8D1-8-196-4	MBEU870GQ5	AA13-IQ7A-4	107151A1	AA11-128577A1-4
D22061-22-010	LR5-14404-300-4	MBEU920RU	AA13-IQ7A-4	107152A1	AA11-128577A1-4
D2212	T.O. 8A1-7-3-4	MBEU965GQ5	AA13-IQ7A-4	107153A1	AA11-128577A1-4
D2213	T.O. 8A1-7-3-4	MBEU9684-3	AA13-IQ7A-4	107154A1	AA11-128577A1-4
D50661-7	T.O. 9H8-14-155-33	MDS10-01	—	107155A1	AA11-128577A1-4
D879-5	T.O. 8A1-7-3-4	MDS10-01A	—	107890-2-1	T.O. 15A5-4-8-113
D888-3	T.O. 8A1-7-3-4	MK1M0D3	T.O. 11A16-1-7	108339-1	—
EA1010-135-6	T.O. 9H7-2-5-4	MK2M0D1	T.O. 11A16-1-7	11-954-201	T.O. 6J15-5-30-3
EA1020-166-1	T.O. 9H8-3-94-3	M11MB	AA13-IQ7A-4	11-954-51	T.O. 6J15-5-30-3
EA50022-8	T.O. 9H8-2-110-63	M13	T.O. 11P6-24-3	11-954-81	T.O. 6J15-5-30-3
EG204A1	T.O. 5L14-2-12-4	M27	T.O. 11P3-3-4-3	1063935G2	T.O. 12R5-4-47-4
ELC1763	T.O. 10C1-3-13-4	P121D	—	1111-558228	T.O. 6J15-2-6-13
ELC1797	T.O. 10C1-3-13-4	RG12D13	T.O. 8R3-73-12	1111-569856	T.O. 6J15-2-6-13
FG200A47	T.O. 5L14-3-21-23	RY472H	T.O. 12R1-4-18-3	1111-569865-9	—
FG200A48	T.O. 5L14-3-21-23	R1645-3	LR5-14404-219-3	11182B	T.O. 15A1-4-17-3
FG200C3	T.O. 5L14-3-21-23	R3073-3	LR5-14404-390-3	1171L000-505	T.O. 9H2-4-132-3
FG220A142	T.O. 5L13-3-13-2	R34	—	12-954-61	T.O. 6J15-10-83-13
FG220A143	T.O. 5L13-3-13-2	SM2509	—	1206-5	T.O. 9H8-2-158-3
FG232A2	T.O. 5L13-3-4-13	SM2642	—	121045	T.O. 15A2-2-52-13
FR11A2	T.O. 15X8-5-2-23	SR4AB	—	122648-1-1	T.O. 15A2-2-102-3
FR2B3	T.O. 15X8-6-2-43	SR8J	—	13100-5	T.O. 15X8-7-9-4
FR61A1	T.O. 15X8-7-18-3	SR97J	—	1312B3112	T.O. 11W1-2-9-3
FTRP121D	—	SR97K	—	13280-4	T.O. 9H8-14-250-3
FV400-19-3	T.O. 6J18-2-2-23	SSU12	L.R. 5-14404-223-4	135269-01	T.O. 5F4-12-4
FV400-23-4	T.O. 6J18-2-2-23	TB125300-4	LR6-14404-380-4	137714-01-02	T.O. 5F8-3-19-4

COMPLESSIVO NDR	PUBBLICAZIONE
138720-01-01	LR11-14404-427-3
138720-01-02	LR11-14404-427-3
1400-15	T.O. 15H5-2-57-23
14120-4	T.O. 9H8-14-45-33
14120-5	—
141965	T.O. 9H8-4-86-3
1439L000-503	T.O. 4SA8-6-3
1450-62B-A62-1	—
15020-6	T.O. 9H8-14-189-53
153715-1	T.O. 4W1-8-13
153780	T.O. 9H14-11-3
15978-11	T.O. 5F12-2-4-4
1600-2	T.O. 9P5-5-50-23
1602	T.O. 9P2-3-24-3
1650-6ANA6-4	T.O. 5F8-9-17-3
171E840G6	LR11-14404-206-4
17710	T.O. 9P5-5-101-3
18140-2	T.O. 4BA4-80-3
183613	T.O. 5A12-3-8-4
18565-3	T.O. 8D1-100-2-3
185800	T.O. 5E6-3-61-4
1980BU45-02	—
2CM9ABB6	T.O. 5E5-3-33-3
207500	T.O. 6J10-3-104-4
2079-1	T.O. 6J15-10-167-3
208-013-500	T.O. 6J5-67-3
20898	T.O. 8S3-2-66-3
20B97-1A	T.O. 8A16-53-4
21R3482-56-30	T.O. 9H8-8-32-3
22322S-ET12	T.O. 5N11-2-4-3
2294-45-04	T.O. 5F8-20-2-3
24-155-301	LR6-14404-429-3
24000M	T.O. 6J15-8-109-3
25113A30K11A3	T.O. 5P3-4-75-3
25113B22D11A3	T.O. 5P3-4-75-3
2574A1	T.O. 9H5-3-36-3
2585422	T.O. 5N2-2-21-4
2585434	T.O. 5N2-2-23-3
2586047	LR12-14404-374-3
259776	—
259800	—
2602310-1	—
261953	—
261954	—
265577	—
26805A37J7A3	T.O. 5P3-4-70-3
26806A37H7A3	T.O. 5P3-4-70-3
274191	—
28V120-2	T.O. 8C14-5-2-3
281554	—
282564	—
2894-10CB10	T.O. 15X6-3-6-4
29061A4	T.O. 15X2-6-4-23
29312-2LJ3	LR5-14404-399-4
3-1018-3	T.O. 4W3-7-1063
3-758-51-9	T.O. 9H8-6-66-13
3L4873-7	T.O. 8S5-3-9-13
3R1444-1	T.O. 9H8-8-30-3
3055741-1	T.O. 9H8-7-7-3
307100-20A	T.O. 6J15-2-135-3
308800	LR6-15266-273-3
314545	T.O. 9H4-4-5-23
315100	AA9-315100-4
317700-9	AA9-317700-9-4
34B56-1A	T.O. 8A25-23-4
3419-5JA1	LR5-14404-286-4
39608-2	T.O. 8D1-7-25-34
39610-2	T.O. 8D1-7-25-34
4CV4125-1	T.O. 9H8-6-74-4
4CV441	T.O. 9H8-6-74-4
4CV4612	T.O. 9H8-6-74-4
4CV483	T.O. 9H8-6-74-4
40C665	T.O. 6J15-2-152-3
40C675	T.O. 6J15-8-115-3
40095-1	T.O. 8S2-2-104-2
401T100-9	T.O. 15A2-2-65-3
4050-3	T.O. 6J15-10-168-3
40671-506	T.O. 11F45-2-11-4
41100-401-11	T.O. 11F33-5-10-4
43155-13	—
43234-501	T.O. 11F12-24-2-4
43234-501	LR11-14404-253-4
45459-506	AA11-59567-506-4
45468-506	AA11-59567-506-4
45840-506	AA11-R21G-2-3
465C23-4	T.O. 9H8-2-161-3
475C59NW	T.O. 6J15-4-26-3
5077-5	T.O. 6J11-4-33
510108-10	T.O. 15A5-6-12-2
51040-2	T.O. 9H8-4-101-23
5108-2	T.O. 15A2-9-22-3
510860-16-1	LR12-14404-383-4
510860-19-1	—
51500-11	T.O. 8D1-8-116-4
51550-7	T.O. 8D1-8-116-4
51550-8	T.O. 8D1-8-116-4
51597-17	T.O. 8D1-8-116-4
51597-23	T.O. 8D1-8-116-4
516250	T.O. 9H8-30-30-4
517-11	—
522-2307-015	T.O. 12R2-4-61-4
522-2310-025	T.O. 12R2-4-61-4
522-3097-045	T.O. 12R2-4-61-4
52700-506-1	AA11-52700-506-4
52710-506-1	AA11-52710-506-4
538908	T.O. 5F13-2-5-2
547470-4	T.O. 8S6-4-20-2
647478-1	T.O. 15A5-6-11-2
548160-1	T.O. 15A8-5-24-4
548162-101	T.O. 15A8-5-34-3
5503C30	T.O. 15X8-7-5-3
55032	T.O. 9H4-2-73-4
58780-506-1	AA11-52700-506-4
589835	T.O. 2JA3-13-14
59552-506-1	AA11-59552-506-4
59553-506-1	AA11-59553-506-4
59567-506-1	AA11-59567-506-4
59569-506-1	AA11-59569-506-4
59572-506-1	AA11-52700-506-4
59573-506-1	AA11-59573-506-4
59574-506-1	AA11-59574-506-4
59575-506-1	AA11-59573-506-4
6-256-61	T.O. 6J15-5-25-3
6-657-1	T.O. 6J15-3-89-3
60-065B	T.O. 6J10-3-73-4
60-125B	T.O. 6J10-3-89-3
60073-3	T.O. 9P2-3-17-73
611649	T.O. 5N24-3-4
614D245G2	T.O. 11F12-16-5-4
61429	—
61430	T.O. 9H3-3-73-3
6195-1	T.O. 6J11-21-3
620B5A	T.O. 5E6-3-57-4
620359	T.O. 5N12-2-6-4
620783	T.O. 5N12-2-6-4
62445	T.O. 7J2-17-3
629330	T.O. 5F6-7-2-4
630880	T.O. 5N1-4-3-4
631237	T.O. 5N6-7-2-4
635T100-11	T.O. 8D1-8-194-4
635320	T.O. 5N19-3-4
637048	T.O. 5N24-3-4
6417	T.O. 6J18-2-6-3
647T100-5	T.O. 8C1-8-195-4
6506700	T.O. 9H7-3-11-4
66B42036	T.O. 1F-104-298
6700	T.O. 8D3-11-3-3
682920-1-1	T.O. 15A3-3-35-4
7-1855-5	LR15-14404-217-3
70B116	T.O. 9H8-4-93-3
701C427G3	T.O. 11F13-29-4-3
71035	AA9-71035-4
71852-1	—
724C779G3	T.O. 11F4-7-9-4
724C801P1	T.O. 11F2-4-10-4
7268702	T.O. 11W1-12-4-34
740B1	T.O. 6J15-4-56-3
740B3	T.O. 6J15-4-56-3
740B5	T.O. 6J15-4-56-3
740B7	T.O. 6J15-4-56-3
760777-601	T.O. 11W1-3-11-3
7633-37A5-1	T.O. 5P5-3-53-3
766926-1	T.O. 9H2-3-41-3
77-100	T.O. 8C14-2-4-3
770686-17	T.O. 16L1-4-7-3
770686-18	T.O. 16L1-4-7-3
770686-19	T.O. 16L1-4-7-3
770686-20	T.O. 16L1-4-7-3
771179-1	T.O. 9H2-2-36-23
772265-101	T.O. 16C1-4-14-3
7724-30C5-1	T.O. 5P5-3-32-14
772437-103	T.O. 15A2-3-31-3
775256-101	T.O. 9H2-4-66-3
775256-102	T.O. 9H2-4-66-3
779271-105	T.O. 16C1-3-14-3
779271-106	T.O. 16C1-3-14-3
782072-5	T.O. 9H2-5-171-4
782073-7	T.O. 5A14-2-18-4
783053-101	T.O. 9H2-4-130-4
783740-103	T.O. 9H2-4-129-3
783823-101	T.O. 11F39-6-3-4
784T100	T.O. 16G1-104-3
784149-103	T.O. 9H2-4-73-34
785T100	T.O. 16G3-2-61-3
785110-7	T.O. 15A2-13-21-3
785315-105	LR11-14404-115-4
785315-106	LR11-14404-115-4
786981-103	T.O. 9H2-5-170-3
786982-117	T.O. 16L1-9-2-3
786982-121	T.O. 16L1-9-2-3
788228-9	T.O. 11F4-23-2-4
788593-501	T.O. 9H2-2-36-13
789365-103	T.O. 9H5-3-34-3
789366-103	T.O. 9H5-3-34-3
789366-109	T.O. 9H5-3-34-3
791210-1	LR6-14404-108-4
793218-105	T.O. 9H2-4-126-4
793218-106	T.O. 9H2-4-126-4
793270-1	T.O. 9H2-4-126-14
793270-3	T.O. 9H2-4-126-14
793631-107	LR16-14404-130-4
793631-108	LR16-14404-130-4
794399-3	T.O. 14D1-3-272
798178-101	T.O. 9H20-2-3
8-557-1	T.O. 6J15-10-138-3
8DJ81CAK2	T.O. 5E6-2-38-3
80215-506-1	AA11-80215-506-4
8101-2	—
8105-7	T.O. 9P5-3-55-3
8156-5	T.O. 4SA3-5-14
8221C	T.O. 15A4-42-3
8241C	T.O. 15A4-26-13
83110-7	T.O. 15A7-2-11-53

COMPLESSIVO NDR	PUBBLICAZIONE	COMPLESSIVO NDR	PUBBLICAZIONE	COMPLESSIVO NDR	PUBBLICAZIONE
847498-103	T.O. 11B29-3-36-2	851717-105	T.O. 6J14-2-3-54	9500-40	T.O. 9H8-3-82-3
8482669-505	L.R. 12-14404-425-4	851717-104	T.O. 6J14-2-3-54	9532445	T.O. 4B48-14-3
849162-101	AA9-849162-4	851717-106	T.O. 6J14-2-3-54	9541577	LR8-14404-290-4
849162-102	AA9-849162-4	86160-506-1	AA11-52700-506-4	9541578	T.O. 9H8-14-241-3
849175-101	T.O. 4S2-35-4	86162-506-1	AA11-52700-506-4	9806-13	T.O. 5P3-3-49-3
851717-101	T.O. 6J14-2-3-54	86164-506-1	AA11-52700-506-4	98095	T.O. 15A1-4-12-3
851717-102	T.O. 6J14-2-3-54	9115-22C2A	T.O. 5L13-2-8-24	98705	T.O. 15A1-4-24-3
851717-103	T.O. 6J14-2-3-54	9500-35	T.O. 9H8-3-82-3		

6. Indice delle abbreviazioni.

6.1. Le seguenti abbreviazioni sono riportate nella Sezione II.

AC	*ALTERNATING CURRENT*	CORRENTE ALTERNATA
ADJ	*ADJUSTMENT*	REGOLAZIONE
AF	*AIR FORCE*	AERONAUTICA
AFC	*AUTOMATIC FREQUENCY CONTROL*	CONTROLLO AUTOMATICO FREQUENZA
AL	*ALUMINUM*	ALLUMINIO
ALIGN.	*ALIGNMENT*	ALLINEAMENTO
AMMO	*AMMUNITION*	MUNIZIONI
AMP	*AMPERE*	AMPERE
AMPL	*AMPLIFIER*	APLIFICATORE
ANT.	*ANTENNA*	ANTENNA
APC	*ARMOR-PIERCING-CAPPED*	BLINDATURA ANTIPERFORANTE
ASSY	*ASSEMBLY*	COMPLESSIVO
ATTMT	*ATTACHMENT*	ACCESSORIO, ATTACCO
AUX	*AUXILIARY*	AUSILIARE
AVAIL	*AVAILABLE*	DISPONIBILE
AWX	*ALL WEATHER*	CACCIA OGNI TEMPO
BHD	*BULKHEAD*	PARATIA
BL	*BASE LINE*	LINEA BASE
BLC	*BOUNDARY LAYER CONTROL*	CONTROLLO DELLO STRATO LIMITE
CKPT	*COCKPIT*	ABITACOLO-CABINA PILOTA
COMP	*COMPONENT*	COMPONENTE
COMPT	*COMPARTMENT*	COMPARTIMENTO (VANO)
CONT	*CONTROL*	COMANDO
CPM	*CYCLES PER MINUTE*	CICLI AL MINUTO
CPS	*CYCLES PER SECOND*	CICLI AL SECONDO
CW	*CONTINUOS WAVE*	ONDA CONTINUA
DC	*DIRECT CURRENT*	CORRENTE CONTINUA
DISC.	*DISCONNECT*	SCONNESSIONE
DPDT	*DOUBLE POLE - DOUBLE THROW*	DOPPIA POLARITÀ - DOPPIA MANDATA
DWG	*DRAWING*	DISEGNO
ELEC	*ELECTRIC*	ELETTRICO
EMERG	*EMERGENCY*	EMERGENZA
ENG	*ENGINE*	MOTORE
EXH	*EXHAUST*	ESAURITO
EXT	*EXTERNAL*	ESTERNO
FB	*FIGHTER-BOMBER*	CACCIA BOMBARDIERE
FIG.	*FIGURE*	FIGURA
FLEX.	*FLEXIBLE*	FLESSIBILE
FREQ	*FREQUENCY*	FREQUENZA
FUS	*FUSELAGE*	FUSOLIERA
FWD	*FORWARD*	ANTERIORE
GEN	*GENERATOR*	GENERATORE
GRD	*GROUND*	MASSA-TERRA
HEX.	*HEXAGON*	ESAGONALE
HYD	*HYDRAULIC*	IDRAULICO
HT	*HIGH TENSION*	ALTA TENSIONE
HVAR	*HIGH-VELOCITY, AIRCRAFT ROCKET*	RAZZO AD ALTA VELOCITÀ
IDENT	*IDENTIFICATION*	IDENTIFICAZIONE
IFF	*IDENTIFICATION FRIEND OR FOE*	IDENTIFICAZIONE AMICO O NEMICO

IND	*INDICATOR*	INDICATORE
IND	*INDUCTANCE*	INDUTTANZA
INST	*INSTRUMENT*	STRUMENTO
INSTL	*INSTALLATION*	INSTALLAZIONE
INT	*INTERNAL*	INTERNO
INTCHG	*INTERCHANGEABLE*	INTERCAMBIABILE
LB	*POUND*	LIBBRA
LE	*LEADING EDGE*	BORDO ENTRATA
LG	*LANDING GEAR*	CARRELLO DI ATTERRAGGIO
LH	*LEFT HAND*	SINISTRO
LT	*LIGHT*	LUCE
LUB	*LUBRICATE*	LUBRIFICANTE
LWR	*LOWER*	INFERIORE
MAX	*MAXIMUM*	MASSIMO
MID	*MIDDLE*	MEDIO
MLG	*MAIN LANDING GEAR*	CARRELLO PRINCIPALE
MTG	*MOUNTING*	SUPPORTO
NASARR	*NORTH AMERICAN SEARCH AND RANGING RADAR*	RADAR DI RICERCA E PUNTAMENTO
NHA	*NEXT HIGHER ASSEMBLY*	COMPLESSIVO MAGGIORE
NLG	*NOSE LANDING GEAR*	CARRELLO ANTERIORE
NO.	*NUMBER*	NUMERO
PDT	*POLE-DOUBLE THROW*	POLARITÀ-DOPPIA MANDATA
PNL	*PANEL*	PANNELLO
POS	*POSITION*	POSIZIONE
PRESS.	*PRESSURE*	PRESSIONE
PST	*POLE-SINGLE-THROW*	POLARITÀ-SINGOLA MANDATA
PT	*POINT*	PUNTO
PUB.	*PUBLICATION*	PUBBLICAZIONE
PWR	*POWER*	FORZA
QTY	*QUANTITY*	QUANTITÀ
RCVR	*RECEIVER*	RICEVITORE
RECP	*RECEPTACLE*	PRESA
REF	*REFERENCE*	RIFERIMENTO
REQD	*REQUIRED*	RICHIESTO
RF	*RADIO FREQUENCY*	RADIO FREQUENZA
RH	*RIGHT HAND*	DESTRO
SEC	*SECOND*	SECONDO
SEP	*SEPARATE*	SEPARATO
SIF	*SELECTED IDENTIFICATION FEATURE*	SEGNALE DI IDENTIFICAZIONE SELEZIONATO
SPDT	*SINGLE-POLE, DOUBLE-THROW*	SINGOLA POLARITÀ-DOPPIA MANDATA
SPL	*SPECIAL*	SPECIALE
SPEC	*SPECIFICATION*	SPECIFICA
SPST	*SINGLE-POLE, SINGLE-THROW*	SINGOLA POLARITÀ-SINGOLA MANDATA
S.P.U.	*SUPPLY POWER UNIT*	GENERATORE AUSILIARIO DI POTENZA
STA	*STATION*	STAZIONE
STK	*STOCK (TO)*	IMMAGAZZINARE
SUB	*SUBSTITUTE*	SOSTITUITO
SUTBL	*SUITABLE*	ADATTO
SW	*SWITCH*	INTERRUTTORE
SYS	*SYSTEM*	IMPIANTO
T.O.	*TECHNICAL ORDER*	ORDINANZA TECNICA
TE	*TRAILING EDGE*	BORDO USCITA
UHF	*ULTRA-HIGH FREQUENCY*	ALTISSIMA FREQUENZA
V	*VOLT*	VOLT
VA	*VOLT AMPERE*	VOLT AMPERE
WG	*WAVEGUIDE*	GUIDA D'ONDA
WHN	*WHEN*	QUANDO
WL	*WATER LINE*	LINEA D'ACQUA
WTH	*WITH*	CON
XMTR	*TRANSMITTER*	TRASMETTITORE

6.2. Indice delle Matricole Militari.

6.2.1. Le seguenti Matricole Militari sono riportate nella colonna « Codice di applicabilità » della Sezione II.

Matricole Militari	Versione	Matricole Militari	Versione	Matricole Militari	Versione	Matricole Militari	Versione	Matricole Militari	Versione	Matricole Militari	Versione
6701	AWX	6736	AWX	6771	AWX	6806	AWX	6841	FB	6874	AWX
6702	AWX	6737	AWX	6772	AWX	6807	AWX	6842	FB	6875	AWX
6703	AWX	6738	AWX	6773	AWX	6808	AWX	6843	FB	6876	AWX
6704	AWX	6739	AWX	6774	AWX	6809	AWX	6844	FB	6877	AWX
6705	AWX	6740	AWX	6775	AWX	6810	AWX	6845	FB	6878	AWX
6706	AWX	6741	FB	6776	AWX	6811	AWX	6846	FB	6879	AWX
6707	AWX	6742	FB	6777	AWX	6812	AWX	6847	FB	6880	AWX
6708	AWX	6743	FB	6778	AWX	6813	AWX	6848	FB	6881	AWX
6709	AWX	6744	FB	6779	FB	6814	AWX	6849	AWX	6882	AWX
6710	AWX	6745	FB	6780	FB	6815	AWX	6850	AWX	6883	AWX
6711	AWX	6746	FB	6781	FB	6816	AWX	6851	AWX	6884	AWX
6712	AWX	6747	FB	6782	FB	6817	AWX	6852	AWX	6885	FB
6713	AWX	6748	FB	6783	AWX	6818	AWX	6853	AWX	6886	FB
6714	AWX	6749	FB	6784	FB	6819	AWX	6854	AWX	6887	FB
6715	AWX	6750	FB	6785	FB	6820	AWX	6855	AWX	6888	FB
6716	AWX	6751	FB	6786	FB	6821	FB	6856	AWX	6889	FB
6717	AWX	6752	FB	6787	FB	6822	AWX	6857	AWX	6890	FB
6718	AWX	6753	FB	6788	FB	6823	AWX	6858	AWX	6891	FB
6719	AWX	6754	FB	6789	FB	6824	AWX	6859	AWX	6892	FB
6720	AWX	6755	FB	6790	FB	6825	AWX	6860	AWX	6893	FB
6721	AWX	6756	FB	6791	FB	6826	AWX	6861	AWX	6894	FB
6722	AWX	6757	FB	6792	FB	6827	AWX	6862	AWX	6895	FB
6723	AWX	6758	FB	6793	FB	6828	FB	6863	AWX	6896	FB
6724	AWX	6759	FB	6794	FB	6829	FB	6864	AWX	6897	FB
6725	AWX	6760	FB	6795	FB	6830	FB	6865	AWX	6898	FB
6726	AWX	6761	FB	6796	FB	6831	FB	6866	AWX	6899	FB
6727	AWX	6762	AWX	6797	FB	6832	FB	6867	AWX	6900	FB
6728	AWX	6763	AWX	6798	FB	6833	FB	6868	AWX	6901	FB
6729	AWX	6764	AWX	6799	FB	6834	FB	6869	AWX	6902	FB
6730	AWX	6765	AWX	6800	AWX	6835	FB	6870	AWX	6903	FB
6731	AWX	6766	AWX	6801	AWX	6836	FB	6871	AWX	6904	FB
6732	AWX	6767	AWX	6802	AWX	6837	FB	6872	AWX	6905	FB
6733	AWX	6768	AWX	6803	AWX	6838	FB	6873	AWX	6906	FB
6734	AWX	6769	AWX	6804	AWX	6839	FB				
6735	AWX	6770	AWX	6805	AWX	6840	FB				

7. Indice delle Ordinanze Tecniche.

7.1. Le seguenti Ordinanze Tecniche (OT), riportate nella Sezione II, sono inerenti alle modifiche introdotte sui velivoli dopo la versione base.

CA11F-104G-149
AA.1F-104S-OT-101
AA.1F-104S-OT-102A
AA.1F-104S-OT-103
AA.1F-104S-OT-104
AA.1F-104S-OT-105
AA.1F-104S-OT-106
AA.1F-104S-OT-107
AA.1F-104S-OT-109
AA.1F-104S-OT-111
AA.1F-104S-OT-113B
AA.1F-104S-OT-115
AA.1F-104S-OT-116
AA.1F-104S-OT-118
AA.1F-104S-OT-120A
AA.1F-104S-OT-122
AA.1F-104S-OT-124
AA.1F-104S-OT-126A
AA.1F-104S-OT-127
AA.1F-104S-OT-128
AA.1F-104S-OT-129
AA.1F-104S-OT-130A
AA.1F-104S-OT-131
AA.1F-104S-OT-132C
AA.1F-104S-OT-134A
AA.1F-104S-OT-138
AA.1F-104S-OT-142A
AA.1F-104S-OT-145A
AA.1F-104S-OT-147
AA.1F-104S-OT-148
AA.1F-104S-OT-149
AA.1F-104S-OT-150A
AA.1F-104S-OT-151
AA.1F-104S-OT-152
AA.1F-104S-OT-155
AA.1F-104S-OT-157
AA.1F-104S-OT-158
AA.1F-104S-OT-159
AA.1F-104S-OT-160
AA.1F-104S-OT-161
AA.1F-104S-OT-162
AA.1F-104S-OT-163
AA.1F-104S-OT-164
AA.1F-104S-OT-165
AA.1F-104S-OT-168
AA.1F-104S-OT-169
AA.1F-104G-OT-171
AA.1F-104S-OT-173
AA.1F-104S-OT-174
AA.1F-104-OT-402
AA.1F-104-OT-580A
AA.1F-104-OT-605A
AA.1F-104-OT-636A
AA.1F-104-OT-647
AA.1F-104-OT-649
AA.1F-104-OT-650A
AA.1F-104-OT-655
AA.1F-104-OT-669A
AA.1F-104-OT-670
AA.1F-104-OT-672A
AA.1F-104-OT-674
AA.1F-104-OT-675
AA.1F-104-OT-676B
AA.1F-104-OT-679A
AA.1F-104-OT-680
AA.1F-104-OT-681A
AA.1F-104-OT-684
AA.1F-104-OT-685B
AA.1F-104-OT-686B
AA.1F-104-OT-688
AA.1F-104-OT-691B
AA.1F-104-OT-692
AA.1F-104-OT-693
AA.1F-104-OT-699
AA.1F-104-OT-701A
AA.1F-104-OT-702A
AA.1F-104-OT-703
AA.1F-104-OT-704A
AA.1F-104-OT-708A
AA.1F-104-OT-710A
AA.1F-104-OT-713
AA.1F-104-OT-714A
AA.1F-104-OT-715A
AA.1F-104-OT-716A
AA.1F-104-OT-718A
AA.1F-104-OT-719A
AA.1F-104-OT-731
AA.1F-104-OT-732B
AA.1F-104-OT-737
AA.1F-104-OT-743A
AA.1F-104-OT-744
AA.1F-104-OT-745A
AA.1F-104-OT-747A
AA.1F-104-OT-749C
AA.1F-104-OT-752
AA.1F-104-OT-759B
AA.1F-104-OT-760A
AA.1F-104-OT-762A
AA.1F-104-OT-764
AA.1F-104-OT-765
AA.1F-104-OT-767
AA.1F-104-OT-768A
AA.1F-104-OT-773
AA.1F-104-OT-775
AA.1F-104-OT-777
AA.1F-104-OT-781
AA.1F-104-OT-782
AA.1F-104-OT-785
AA.1F-104-OT-787
AA.1F-104-OT-792
AA.1F-104-OT-796
AA.1F-104-OT-797
AA.1F-104-OT-798
AA.1F-104-OT-799
AA.1F-104-OT-800
AA.1F-104-OT-801
AA.1F-104-OT-802
AA.1F-104-OT-805
AA.13-IQ7A-OT-103C
AA.21-AIM9B-OT-103A

COME SI USA IL CATALOGO ILLUSTRATO

Per trovare un N. della Parte, se si conosce la Sezione o il sistema di appartenenza del pezzo.

1. Individuare il N. della illustrazione della Sezione o del sistema, consultando l'« Indice del contenuto » **(Sez. I).**
2. Individuare la parte ed il relativo N. di riferimento nella pagina illustrata **(Sez. II).**
3. Localizzare nella colonna « Figura e Particolare » il numero di riferimento. A fianco di questo numero sono elencate le altre informazioni, cioè: N. della Parte, descrizione, applicabilità, ecc. **(Sez. II).**

Per trovare l'illustrazione del pezzo se si conosce il N. della Parte.

1. Rintracciare il N. della Parte nell'Indice alfa-numerico **(Sez. III).**
2. Rilevare il numero di figura e quello del particolare del pezzo indicati a fianco del N. della Parte **(Sez. III).**
3. Usando il numero di figura e quello del particolare, esaminare l'elenco delle parti in Sezione II, alla pagina ove è descritta la figura rilevata e rintracciare il N. della Parte ed i suoi dati descrittivi **(Sez. II).**

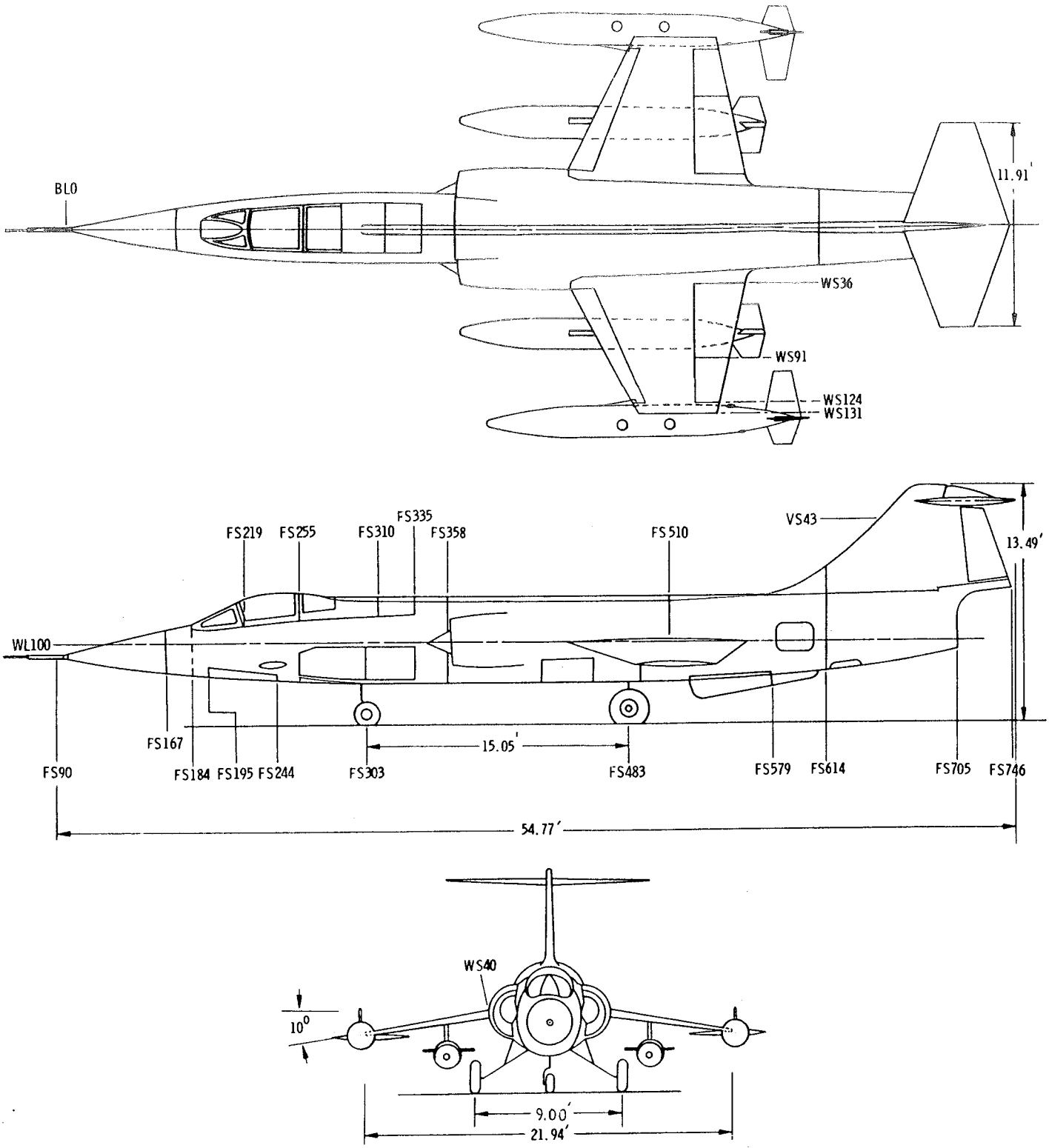

SCHEMA POSIZIONAMENTO STAZIONI

PAGINA IN BIANCO

SEZIONE II

ELENCAZIONE ILLUSTRATA E DESCRITTIVA

Aircraft Complete

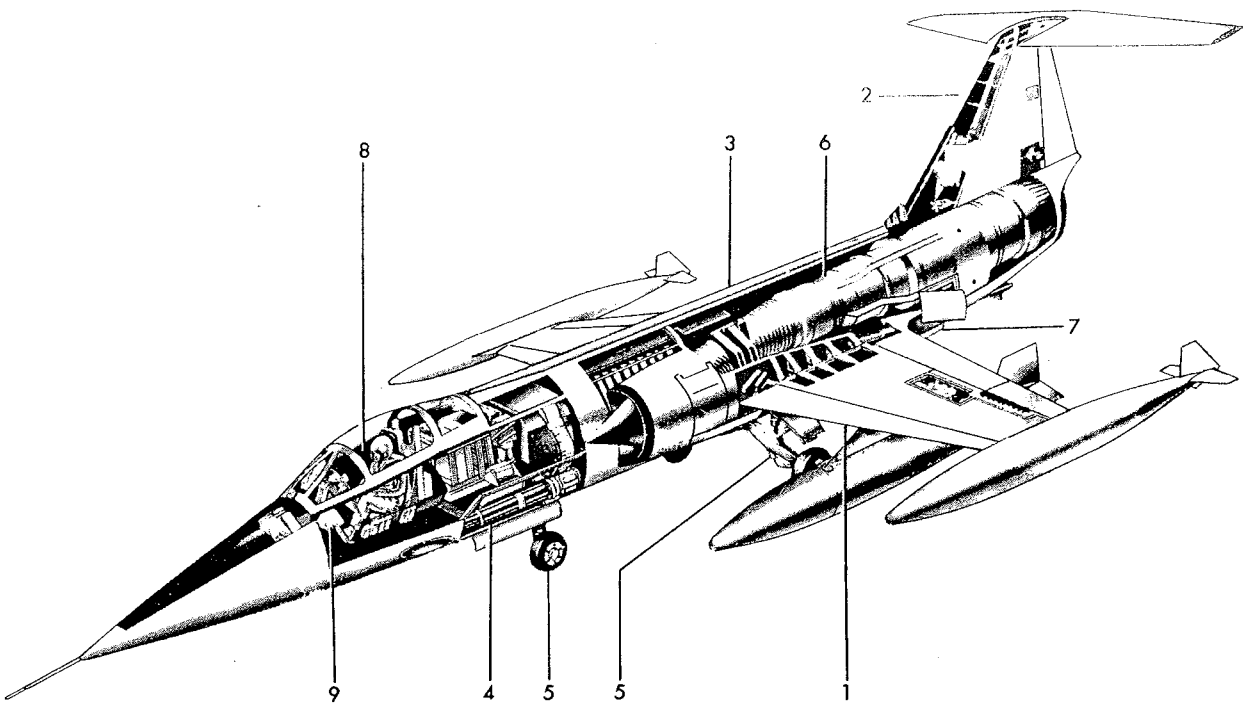

Figure 1 – General View of Complete Aircraft

Indice N.	TITOLO	Figura N.
1 ALA *(WING)*		2-18
	ALA COMPLETA *(WING COMPLETE)*	2
	ALA, STRUTTURA *(WING STRUCTURE)*	3-9
	ALA, IMPIANTO COMBUSTIBILE *(WING FUEL)*	10
	ALA, IMPIANTO IDRAULICO *(WING HYDRAULICS)*	11
	ALA, CONTROLLO STRATO LIMITE *(WING PNEUMATICS)*	12-15
	ALA, IMPIANTO ELETTRICO *(WING ELECTRICAL)*	16-17
	EQUIPAGGIAMENTO SU ESTREMITÀ ALARE *(WING EQUIPMENT)*	18
2 PIANI DI CODA *(EMPENNAGE)*		19-29
	PIANI DI CODA COMPLETI *(EMPENNAGE COMPLETE)*	19
	PIANI DI CODA, STRUTTURA *(EMPENNAGE STRUCTURE)*	20-24
	PIANI DI CODA, COMANDI *(EMPENNAGE CONTROLS)*	25
	PIANI DI CODA, IMPIANTO IDRAULICO *(EMPENNAGE HYDRAULICS)*	26-29
3 FUSOLIERA *(FUSELAGE)*		30-224
	FUSOLIERA COMPLETA *(FUSELAGE COMPLETE)*	30-32A
	FUSOLIERA, STRUTTURA *(FUSELAGE STRUCTURE)*	33-62
	FUSOLIERA, COMANDI *(FUSELAGE CONTROLS)*	63
	COMANDI DI VOLO *(FLIGHT CONTROLS)*	64-84
	COMANDI MANUALI DI SGANCIO *(MANUAL RELEASE CONTROLS)*	85-95
	IMPIANTO COMBUSTIBILE *(FUSELAGE FUEL)*	96-113
	IMPIANTO IDRAULICO *(FUSELAGE HYDRAULICS)*	114-132
	TUBO PITOT ED IMPIANTO STATICO *(PITOT AND STATIC)*	133-135

Indice N.	TITOLO	Figura N.
3 FUSOLIERA (CONT.)		
	IMPIANTO OSSIGENO *(OXYGEN)*	136
	IMPIANTO CONDIZIONAMENTO E PRESSURIZZAZIONE *(AIR CONDITIONING AND PRESSURIZATION)*	137-155A
	IMPIANTO ELETTRICO ED ELETTRONICO *(FUSELAGE ELECTRICAL AND ELECTRONICS)*	156-199
	ANTENNE *(ANTENNAS)*	200-201
	PARABREZZA E TETTUCCIO *(WINDSHIELD AND CANOPY)*	202-211
	SEGGIOLINO EIETTABILE ED EQUIPAGGIAMENTO DI SOPRAVVIVENZA *(EJECTION SEAT AND SURVIVAL EQUIPMENT)*	212-213
	EQUIPAGGIAMENTO ABITACOLO *(COCKPIT SECTION EQUIPMENT)*	214-217
	PANNELLI STRUMENTI *(INSTRUMENT PANELS)*	218-224
4 ARMAMENTO *(ARMAMENT)*		225-231
5 ORGANI DI ATTERRAMENTO *(LANDING GEAR)*		232-242
	CARRELLO ANTERIORE *(NOSE LANDING GEAR)*	232-236
	CARRELLO PRINCIPALE *(MAIN LANDING GEAR)*	237-242
6 GRUPPO MOTOPROPULSORE *(POWER PLANT)*		243-254
7 EQUIPAGGIAMENTO PER DECELERAZIONE *(DECELERATION EQUIPMENT)*		255-259
8 EQUIPAGGIAMENTO A CORREDO *(LOOSE EQUIPMENT)*		260-268
9 RIEPILOGO IMPIANTI E COMANDI *(SYSTEMS)*		269-285

Figura e particolare	NDR	1 2 3 4 5 6 7 DENOMINAZIONE	Quant.	Codice applicab.
		COMPLETE WING ASSEMBLY		
2- 1	NAS1004-8A	. BOLT (80205) (NHA 849229-101) (NHA 849229-102) (NHA FL3000-101) (NHA FL3000-102) *(see fig. 12)*	6	
	849230-101	. WING ASSY, complete LH (NHA 849229-101)	1	6701-6765
	849230-125	. WING ASSY, complete LH (NHA 849229-101)	1	6766-6850
	FL3001-101	. WING ASSY, complete LH (A0019) (NHA FL3000-101)	1	6851-
	849230-102	. WING ASSY, complete RH (NHA 849229-102)	1	6701-6733
	849230-120	. WING ASSY, complete RH (NHA 849229-102)	1	6734-6765
	849230-126	. WING ASSY, complete RH (NHA 849229-102)	1	6766-6850
	FL3001-102	. WING ASSY, complete RH (A0019) (NHA FL3000-102)	1	6851-
		Attaching Parts		
- 1A	MS21250H07026	. BOLT (96906)	10	
- 2	MS21250H10036	. BOLT (96906)	9	
- 3	MS21250H10044	. BOLT (96906)	1	
	798967-101	. SHIM (NHA 849230-105) (NHA 849230-106) (NHA 849230-124) (NHA FL3001-105) (FL3001-106)	10	
	798967-103	. SHIM (NHA 849230-105) (NHA 849230-106) (NHA 849230-124) (NHA FL3001-105) (FL3001-106)	5	
	798967-105	. SHIM (NHA 849230-105) (NHA 849230-106) (NHA 849230-124) (NHA FL3001-105) (FL3001-106)	5	
	798967-107	. SHIM (NHA 849230-105) (NHA 849230-106) (NHA 849230-124) (NHA FL3001-105) (FL3001-106)	5	
	798967-109	. SHIM (NHA 849230-105) (NHA 849230-106) (NHA 849230-124) (NHA FL3001-105) (FL3001-106)	5	
	798967-111	. SHIM (NHA 849230-105) (NHA 849230-106) (NHA 849230-124) (NHA FL3001-105) (FL3001-106)	5	
	798967-113	. SHIM (NHA 849230-105) (NHA 849230-106) (NHA 849230-124) (NHA FL3001-105) (FL3001-106)	5	
	798968-101	. SHIM (NHA 849230-105) (NHA 849230-106) (NHA 849230-124) (NHA FL3001-105) (FL3001-106)	10	
	798968-103	. SHIM (NHA 849230-105) (NHA 849230-106) (NHA 849230-124) (NHA FL3001-105) (FL3001-106)	5	
	798968-105	. SHIM (NHA 849230-105) (NHA 849230-106) (NHA 849230-124) (NHA FL3001-105) (FL3001-106)	5	
	798968-107	. SHIM (NHA 849230-105) (NHA 849230-106) (NHA 849230-124) (NHA FL3001-105) (FL3001-106)	5	
	798968-109	. SHIM (NHA 849230-105) (NHA 849230-106) (NHA 849230-124) (NHA FL3001-105) (FL3001-106)	5	
	798968-111	. SHIM (NHA 849230-105) (NHA 849230-106) (NHA 849230-124) (NHA FL3001-105) (FL3001-106)	5	
	798968-113	. SHIM (NHA 849230-105) (NHA 849230-106) (NHA 849230-124) (NHA FL3001-105) (FL3001-106)	5	
	798232-101	. SHIM	8	
- 4	MS20002C7	. WASHER (96906)	10	
- 5	MS20002C10	. WASHER (96906)	10	
	MS20002-10	. WASHER (96906)	10	
		———————*———————		
- 6	786355-101	. . ACTUATOR INSTL, leading edge flap LH *(see fig. 16)*	1	6701-6720
	786355-103	. . ACTUATOR INSTL, leading edge flap LH *(see fig. 16)*	1	6721-
	786355-102	. . ACTUATOR INSTL, leading edge flap RH *(see fig. 16)*	1	6701-6720
	786355-104	. . ACTUATOR INSTL, leading edge flap RH *(see fig. 16)*	1	6721-
- 7	760174-501	. . ACTUATOR INSTL, trailing edge flap LH *(see fig. 16)*	1	6701-6720
	760174-101	. . ACTUATOR INSTL, trailing edge flap LH *(see fig. 16)*	1	6721-
	760174-502	. . ACTUATOR INSTL, trailing edge flap RH *(see fig. 16)*	1	6701-6720
	760174-102	. . ACTUATOR INSTL, trailing edge flap RH *(see fig. 16)*	1	6721-
- 8	761994-501	. . SWITCH INSTL, leading edge flap position LH *(see fig. 17)* . . .	1	6701-6765
	761994-101	. . SWITCH INSTL, leading edge flap position LH *(see fig. 17)* . . .	1	6766-
	851591-103	A. . SWITCH INSTL, leading edge flap position RH *(see fig. 17)* . . .	1	6766-
	849230-105	. . WING ASSY, LH	1	6701-6850
	FL3001-105	. . WING ASSY, LH (A0019)	1	6851-
	849230-106	. . WING ASSY, RH	1	6701-6733
	849230-124	. . WING ASSY, RH	1	6734-6850

MINISTERO DELLA DIFESA

DIREZIONE GENERALE DELLE COSTRUZIONI
DELLE ARMI E DEGLI ARMAMENTI
AERONAUTICI E SPAZIALI

ROMA

AA.1F-104S-4

MANUALE TECNICO
CATALOGO NOMENCLATORE ILLUSTRATO
DELLE PARTI DI RICAMBIO

VELIVOLO F-104S

LA PRESENTE PUBBLICAZIONE ANNULLA E SOSTITUISCE
IL MANUALE TECNICO AA.1F-104S-4 EMESSO IN DATA 6-1-1969

Ditta costruttrice: AERITALIA - STABILIMENTI DI TORINO
Codice del costruttore: A0019

EDIZIONE 22-7-1974

Preparato dalla AERITALIA - STABILIMENTI DI TORINO - Servizio Tecnico di Assistenza

Wing Complete

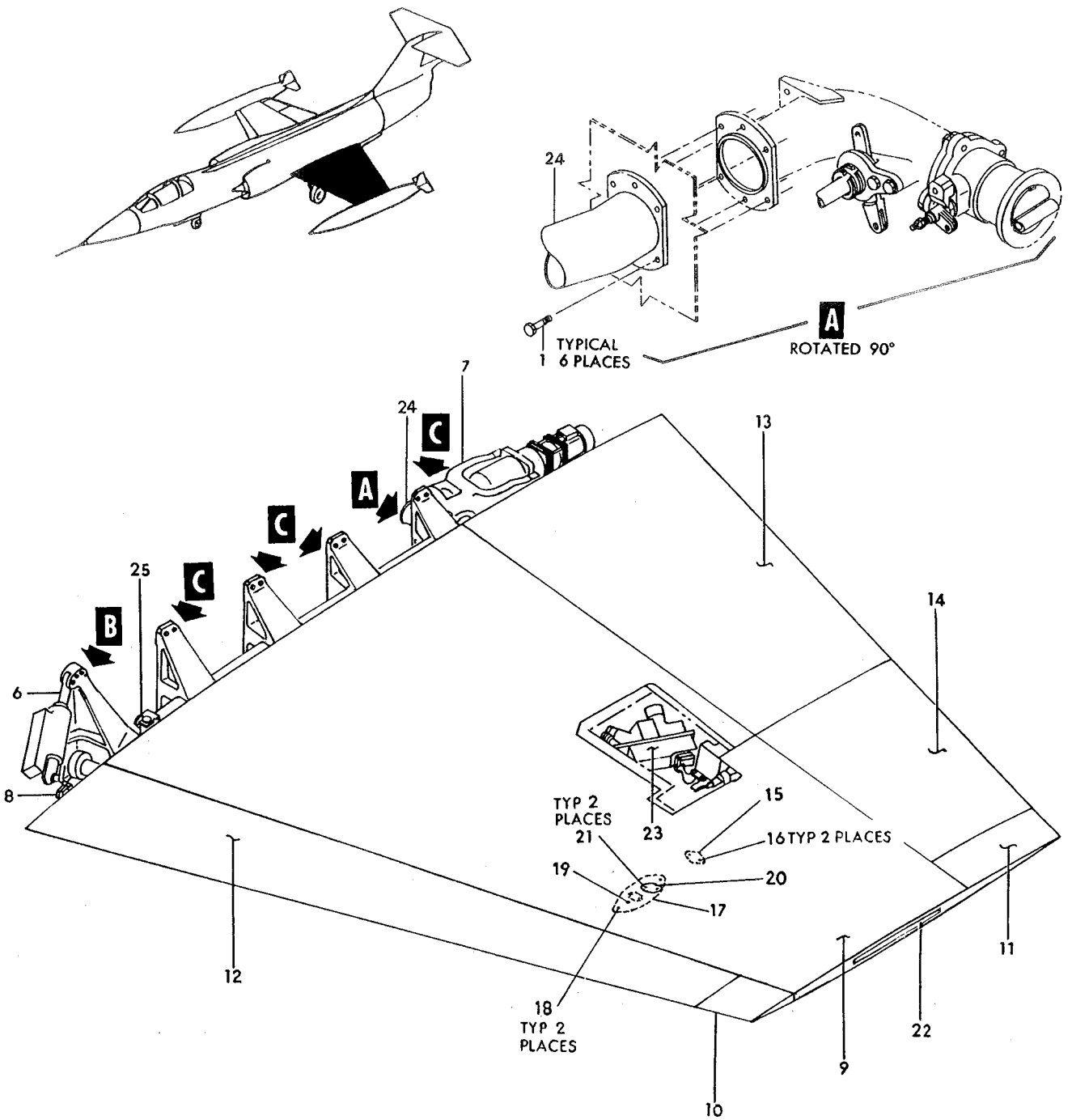

Figure 2—Complete Wing Assembly (Sheet 1 of 2)

Wing Complete

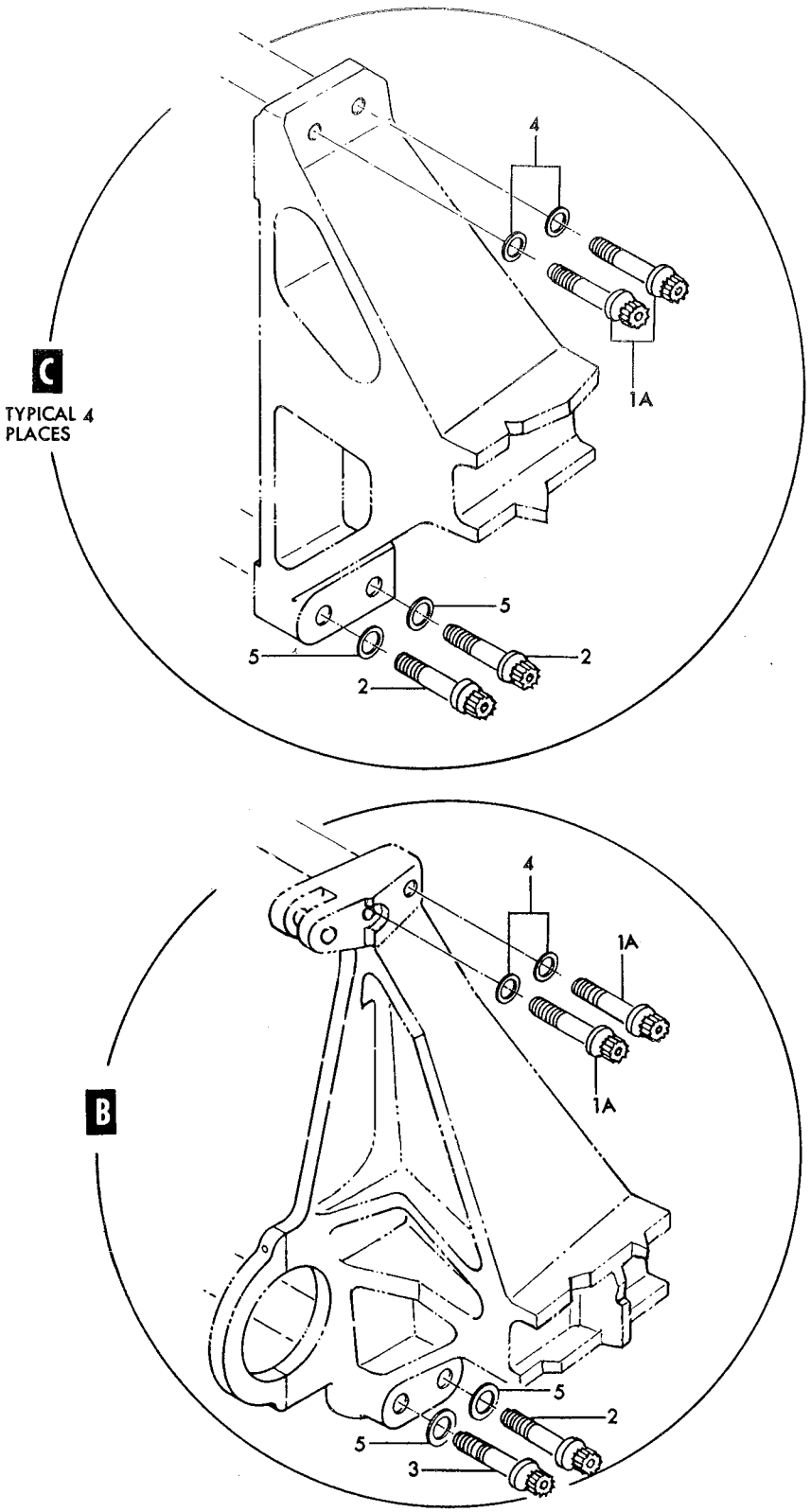

Figure 2—Complete Wing Assembly (Sheet 2 of 2)

Figura e particolare	NDR	1	2	3	4	5	6	7	DENOMINAZIONE	Quant.	Codice applicab.
2-	FL3001-106								WING ASSY, RH (A0019)	1	6851-
	849917-101								ELECTRICAL INSTL, LH wing *(see fig. 17)*	1	
	849918-101								ELECTRICAL INSTL, RH wing *(see fig. 17)*	1	
- 9	849211-101								BOX ASSY, wing LH *(see fig. 3)*	1	6701-6732
	849211-123								BOX ASSY, wing LH *(see fig. 3)*	1	6733-6765
	849211-133								BOX ASSY, wing LH *(see fig. 3)*	1	6766-6790
	849211-137								BOX ASSY, wing LH *(see fig. 3)*	1	6791-6850
	FL3002-101								BOX ASSY, wing LH (A0019) *(see fig. 3)*	1	6851-
	849211-102	B.							BOX ASSY, wing RH (Modified and reidentified to FL0430-118 per AA.1F-104-OT-760A)	1	6701-6732
	FL0430-118	C.							BOX ASSY, wing RH (A0019) (Supersedes 849211-102 per AA.1F-104-OT-760A) *(see fig. 3)*	1	6701-6732
	849211-124	B.							BOX ASSY, wing RH (Modified and reidentified to FL0430-120 per AA.1F-104-OT-760A) *(see fig. 3)*	1	6733
	FL0430-120	C.							BOX ASSY, wing RH (A0019) (Supersedes 849211-124 per AA.1F-104-OT-760A) *(see fig. 3)*	1	6733
	849211-130								BOX ASSY, wing RH *(see fig. 3)*	1	6734-6765
	849211-134								BOX ASSY, wing RH *(see fig. 3)*	1	6766-6790
	849211-138								BOX ASSY, wing RH *(see fig. 3)*	1	6791-6850
	FL3002-102								BOX ASSY, wing RH (A0019) *(see fig. 3)*	1	6851-
	796742-1								LEADING EDGE INSTL, wing LH	1	
	796742-2								LEADING EDGE INSTL, wing RH	1	
-10	796742-3								LEADING EDGE ASSY, LH *(see fig. 4)*	1	
	796742-4								LEADING EDGE ASSY, RH *(see fig. 4)*	1	
-11	782562-101								TRAILING EDGE INSTL, wing LH *(see fig. 5)*	1	
	782562-102								TRAILING EDGE INSTL, wing RH *(see fig. 5)*	1	
-12	786787-1								FLAP INSTL, leading edge LH *(see fig. 4)*	1	
	786787-2								FLAP INSTL, leading edge RH *(see fig. 4)*	1	
-13	784670-501								FLAP INSTL, trailing edge LH *(see fig. 5)*	1	
	784670-502								FLAP INSTL, trailing edge RH *(see fig. 5)*	1	
-14	761719-101								AILERON INSTL, wing LH *(see fig. 5)*	1	
	761719-102								AILERON INSTL, wing RH *(see fig. 5)*	1	
-15	849274-101								COVER INSTL, wing probe socket	1	
-16	NAS1203-4								SCREW (80205)	2	
-17	849275-101								COVER, electrical connector	1	6701-6790
	849275-103								COVER, electrical connector LH	1	6791-
	849275-104								COVER, electrical connector RH	1	6791-
-18	NAS1203-7								SCREW (80205)	2	
-19	NAS1203-12								SCREW (80205)	1	
-20	849277-101								COVER, hanger bolt, upper surface	1	
-21	NAS1203-4								SCREW (80205)	2	
	MS27253-1								NAMEPLATE (96906)	1	
-22	785741-101								COVER INSTL, wing tip LH *(see fig, 18)*	1	
	785741-102								COVER INSTL, wing tip RH *(see fig. 18)*	1	
-23	783039-103								SERVO INSTL, aileron power control LH *(see fig. 11)*	1	
	783039-104								SERVO INSTL, aileron power control RH *(see fig. 11)*	1	
-24	784638-1								DUCT INSTL, boundary layer control LH *(see fig. 12)*	1	6701-6815
	784638-101								DUCT INSTL, boundary layer control LH *(see fig. 12)*	1	6816-
	784638-2								DUCT INSTL, boundary layer control RH *(see fig. 12)*	1	6701-6815
	784638-102								DUCT INSTL, boundary layer control RH *(see fig. 12)*	1	6816-
-25	785742-5								ACTUATOR INSTL, leading edge flap latch LH *(see fig. 9)*	1	6701-6765
	785742-101								ACTUATOR INSTL, leading edge flap latch LH *(see fig. 9)*	1	6766-
	785742-6								ACTUATOR INSTL, leading edge flap latch RH *(see fig. 9)*	1	6701-6765
	785742-102								ACTUATOR INSTL, leading edge flap latch RH *(see fig. 9)*	1	6766-
	MS27253-1								NAMEPLATE (96906)	1	

A - Reqd per AA.1F-104-OT-704A
B - Removed per AA.1F-104-OT-760A
C - Reqd per AA.1F-104-OT-760A

Figura e particolare	NDR	DENOMINAZIONE 1 2 3 4 5 6 7	Quant.	Codice applicab.
		WING BOX ASSEMBLY		
3	849211-101	. BOX ASSY, wing LH *(see fig. 2 for reqd)*	REF	6701-6732
	849211-123	. BOX ASSY, wing LH *(see fig. 2 for reqd)*	REF	6733-6765
	849211-133	. BOX ASSY, wing LH *(see fig. 2 for reqd)*	REF	6766-6790
	849211-137	. BOX ASSY, wing LH *(see fig. 2 for reqd)*	REF	6791-6850
	FL3002-101	BOX ASSY, wing LH (A0019) *(see fig. 2 for reqd)*	REF	6851-
	849211-102	C. BOX ASSY, wing RH (Modified and reidentified to FL0430-118 per AA.1F-104-OT-760A) *(see fig. 2 for reqd)*	REF	6701-6732
	FL0430-118	D. BOX ASSY, wing RH (A0019) (Supersedes 849211-102 per AA.1F-104-OT-760A) *(see fig. 2 for reqd)*	REF	6701-6732
	849211-124	C. BOX ASSY, wing RH (Modified and reidentified to FL0430-120 per AA.1F-104-OT-760A) *(see fig. 2 for reqd)*	REF	6733
	FL0430-120	D. BOX ASSY, wing RH (A0019) (Supersedes 849211-124 per AA.1F-104-OT-760A) *(see fig. 2 for reqd)*	REF	6733
	849211-130	. BOX ASSY, wing RH *(see fig. 2 for reqd)*	REF	6734-6765
	849211-134	. BOX ASSY, wing RH *(see fig. 2 for reqd)*	REF	6766-6790
	849211-138	. BOX ASSY, wing RH *(see fig. 2 for reqd)*	REF	6791-6850
	FL3002-102	. BOX ASSY, wing RH (A0019) *(see fig. 2 for reqd)*	REF	6851-
	849211-103	. . STRUCTURE ASSY, box LH	1	6701-6732
	849211-125	. . STRUCTURE ASSY, box LH	1	6733-6765
	849211-135	. . STRUCTURE ASSY, box LH	1	6766-6790
	859211-139	. . STRUCTURE ASSY, box LH	1	6791-6850
	FL3002-103	. . STRUCTURE ASSY, box LH (A0019)	1	6851-
	849211-104	. . STRUCTURE ASSY, box RH	1	6701-6732
	849211-126	. . STRUCTURE ASSY, box RH	1	6733
	849211-132	. . STRUCTURE ASSY, box RH	1	6734-6765
	849211-136	. . STRUCTURE ASSY, box RH	1	6766-6790
	849211-140	. . STRUCTURE ASSY, box RH	1	6791-6850
	FL3002-104	. . STRUCTURE ASSY, box RH (A0019)	1	6851-
	849225-101	. . . SURFACE INSTL, fwd upper LH *(see fig. 8)*	1	
	849225-102	. . . SURFACE INSTL, fwd upper RH *(see fig. 8)*	1	
	849226-101	. . . SURFACE INSTL, aft upper LH *(see fig. 8)*	1	
	849226-102	. . . SURFACE INSTL, aft upper RH *(see fig. 8)*	1	
	849223-101	. . . SURFACE INSTL, fwd lower LH *(see fig. 8)*	1	6701-6790
	849223-105	. . . SURFACE INSTL, fwd lower LH *(see fig. 8)*	1	6791-6850
	FL3003-101	. . . SURFACE INSTL, fwd lower LH (A0019) *(see fig. 8)*	1	6851-
	849223-102	. . . SURFACE INSTL, fwd lower RH *(see fig. 8)*	1	6701-6733
	849223-104	. . . SURFACE INSTL, fwd lower RH *(see fig. 8)*	1	6734-6790
	849223-106	. . . SURFACE INSTL, fwd lower RH *(see fig. 8)*	1	6791-6850
	FL3003-102	. . . SURFACE INSTL, fwd lower RH (A0019) *(see fig. 8)*	1	6851-
	849224-101	. . . SURFACE INSTL, aft lower LH *(see fig. 8)*	1	6701-6765
	849224-105	. . . SURFACE INSTL, aft lower LH *(see fig. 8)*	1	6766-6790
	849224-107	. . . SURFACE INSTL, aft lower LH *(see fig. 8)*	1	6791-6850
	FL3004-101	. . . SURFACE INSTL, aft lower LH (A0019) *(see fig. 8)*	1	6851-
	849224-102	. . . SURFACE INSTL, aft lower RH *(see fig. 8)*	1	6701-6733
	849224-104	. . . SURFACE INSTL, aft lower RH *(see fig. 8)*	1	6734-6765
	849224-106	. . . SURFACE INSTL, aft lower RH *(see fig. 8)*	1	6766-6790
	849224-108	. . . SURFACE INSTL, aft lower RH *(see fig. 8)*	1	6791-6850
	FL3004-102	. . . SURFACE INSTL, aft lower RH (A0019) *(see fig. 8)*	1	6851-
	849917-103	. . . HARNESS INSTL, wing tip light LH *(see fig. 198)*	1	
	849918-103	. . . HARNESS INSTL, wing tip light RH *(see fig. 198)*	1	
	LS898-2 1-2	. . . PATCH, fabric (36659)	12	
	LS898-1 1-2	. . . PATCH, fabric (36659)	52	
	849211-107	. . . STRUCTURE ASSY, inboard LH	1	6701-6850
	FL3002-107	. . . STRUCTURE ASSY, inboard LH (A0019)	1	6851-
	849211-108	. . . STRUCTURE ASSY, inboard RH	1	6701-6850
	FL3002-108	. . . STRUCTURE ASSY, inboard RH (A0019)	1	6851-
- 1	849235-101	. . . . INTERCOSTAL ASSY, wing No. 1	1	
		Attaching Parts		
- 2	NAS1105-7D	. . . . BOLT (80205)	5	6701-6850

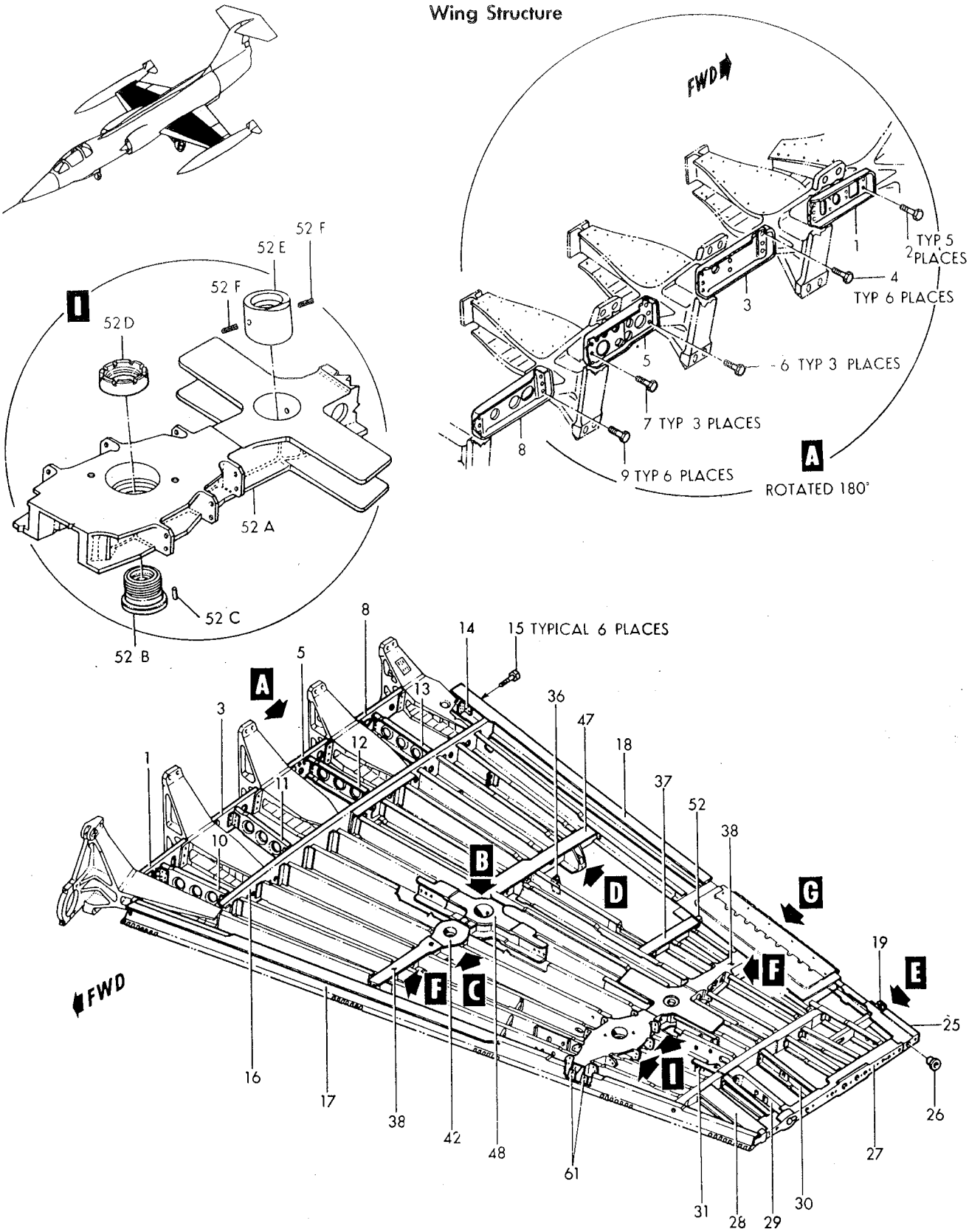

Figure 3–Wing Box Assembly (Sheet 1 of 3)

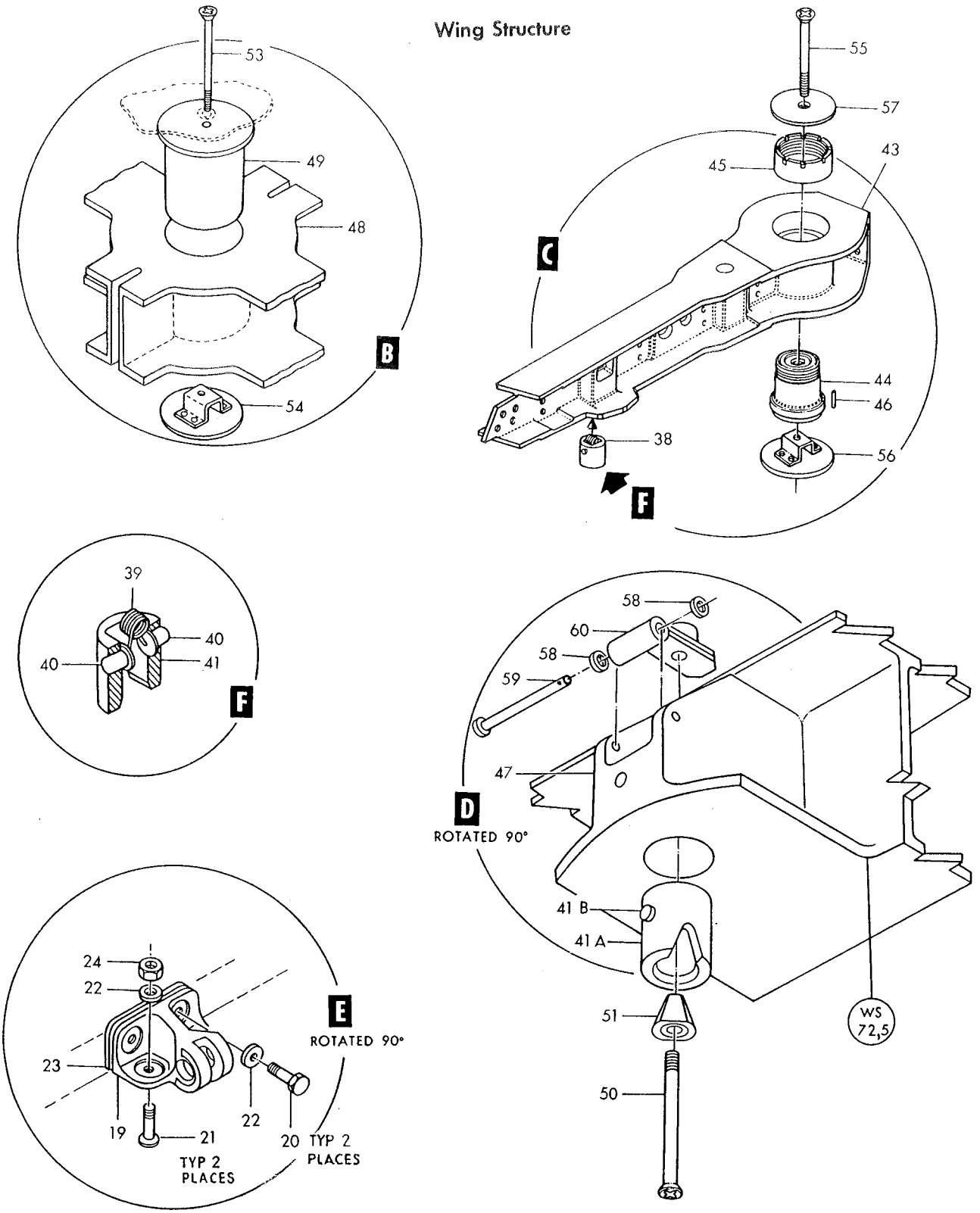

Figure 3–Wing Box Assembly (Sheet 2 of 3)

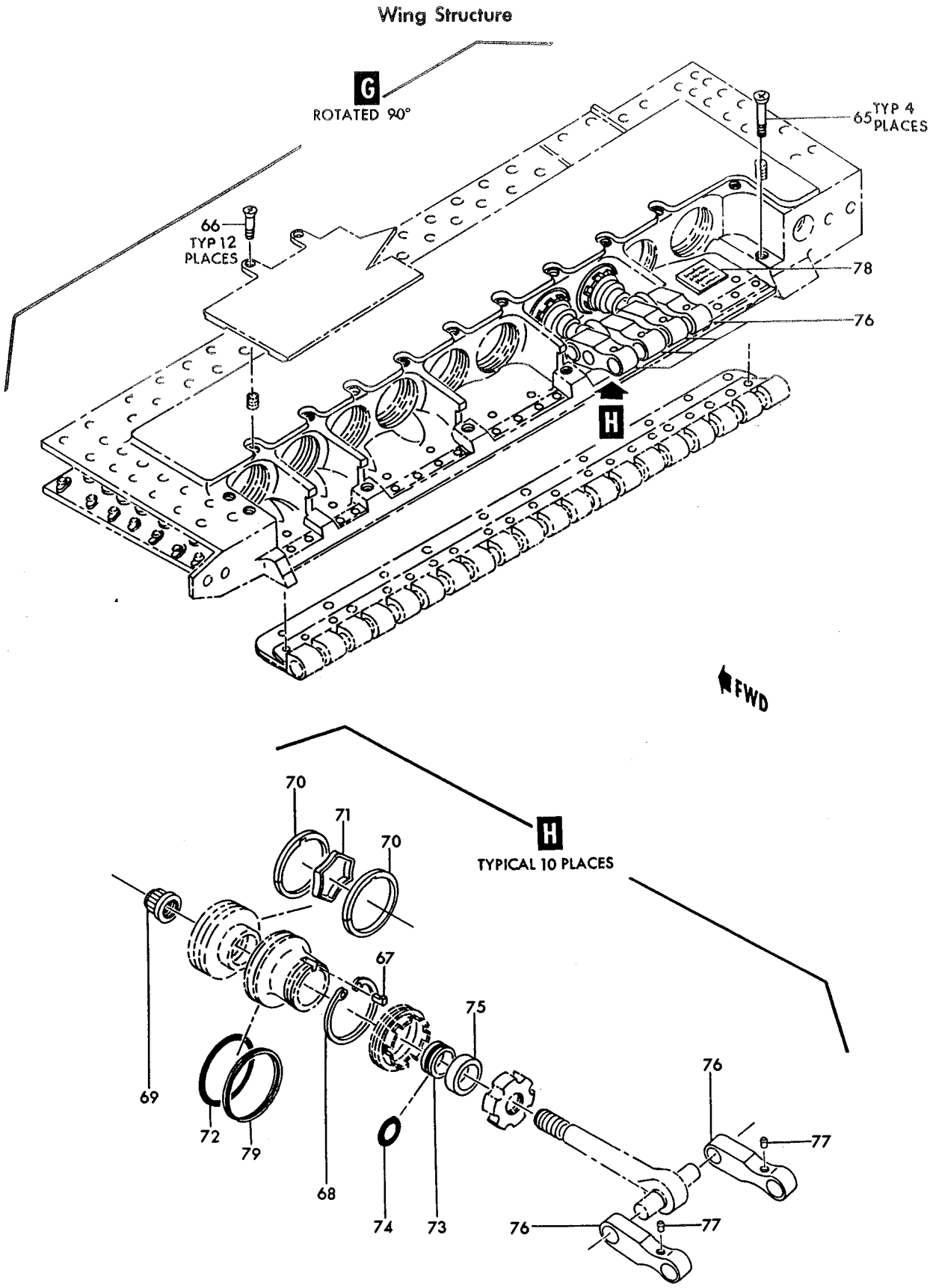

Figure 3—Wing Box Assembly (Sheet 3 of 3)

Figura e particolare	NDR	1 2 3 4 5 6 7 DENOMINAZIONE	Quant.	Codice applicab.
3	NAS1105-6D	BOLT (80205)	2	6851-
	NAS1105-8D	BOLT (80205)	3	6851-
		——————✲——————		
- 3	785770-1	INTERCOSTAL, wing No. 2	1	
		Attaching Parts		
- 4	NAS1105-7D	BOLT (80205)	6	6701-6850
	NAS1105-8D	BOLT (80205)	6	6851-
		——————✲——————		
- 5	760483L	INTERCOSTAL, wing No. 3 LH	1	
	760483R	INTERCOSTAL, wing No. 3 RH	1	
		Attaching Parts		
- 6	NAS1105-8D	BOLT (80205)	3	6701-6850
	NAS1105-9D	BOLT (80205)	3	6851-
- 7	NAS1105-11D	BOLT (80205)	3	
		——————✲——————		
- 8	760484	INTERCOSTAL, wing No. 4	1	
		Attaching Parts		
- 9	NAS1105-7D	BOLT (80205)	6	6701-6850
	NAS1105-8D	BOLT (80205)	6	6851-
	AN960D516	WASHER (88044)	3	6851-
		——————✲——————		
	783195-1	FITTING ASSY, wing No. 1 LH *(see fig. 6)*	1	6701-6850
	FL3011-101	FITTING ASSY, wing No. 1 LH (A0019) *(see fig. 6)*	1	6851-
	783195-2	FITTING ASSY, wing No. 1 RH *(see fig. 6)*	1	6701-6850
	FL3011-102	FITTING ASSY, wing No. 1 RH (A0019) *(see fig. 6)*	1	6851-
	783196-101	FITTING ASSY, wing No. 2 LH *(see fig. 6)*	1	6701-6850
	FL3012-101	FITTING ASSY, wing No. 2 LH (A0019) *(see fig. 6)*	1	6851-
	783196-102	FITTING ASSY, wing No. 2 RH *(see fig. 6)*	1	6701-6850
	FL3012-102	FITTING ASSY, wing No. 2 RH (A0019) *(see fig. 6)*	1	6851-
	783197-101	FITTING ASSY, wing No. 3 LH *(see fig. 6)*	1	6701-6850
	FL3013-101	FITTING ASSY, wing No. 3 LH (A0019) *(see fig. 6)*	1	6851-
	783197-102	FITTING ASSY, wing No. 3 RH *(see fig. 6)*	1	6701-6850
	FL3013-102	FITTING ASSY, wing No. 3 RH (A0019) *(see fig. 6)*	1	6851-
	783198-1	FITTING ASSY, wing No. 4 LH *(see fig. 6)*	1	6701-6850
	FL3014-101	FITTING ASSY, wing No. 4 LH (A0019) *(see fig. 6)*	1	6851-
	783198-2	FITTING ASSY, wing No. 4 RH *(see fig. 6)*	1	6701-6850
	FL3014-102	FITTING ASSY, wing No. 4 RH (A0019) *(see fig. 6)*	1	6851-
	783199-1	FITTING ASSY, wing No. 5 LH *(see fig. 6)*	1	6701-6850
	FL3015-101	FITTING ASSY, wing No. 5 LH (A0019) *(see fig. 6)*	1	6851-
	783199-2	FITTING ASSY, wing No. 5 RH *(see fig. 6)*	1	6701-6850
	FL3015-102	FITTING ASSY, wing No. 5 RH (A0019) *(see fig. 6)*	1	6851-
	760503L	INTERCOSTAL INSTL, wing fwd LH	1	6701-6850
	FL3021-101	INTERCOSTAL INSTL, wing fwd LH (A0019)	1	6851-
	760503R	INTERCOSTAL INSTL, wing fwd RH	1	6701-6850
	FL3021-102	INTERCOSTAL INSTL, wing fwd RH (A0019)	1	6851-
-10	760503-3L	. INTERCOSTAL ASSY, wing fwd LH	1	6701-6850
	FL3021-103	. INTERCOSTAL ASSY, wing fwd LH (A0019)	1	6851-
	760503-3R	. INTERCOSTAL ASSY, wing fwd RH	1	6701-6850
	FL3021-104	. INTERCOSTAL ASSY, wing fwd RH (A0019)	1	6851-
		Attaching Parts		
	NAS1203-2	. SCREW (80205)	1	
		——————✲——————		
	760504L	INTERCOSTAL INSTL, wing intermediate LH	1	6701-6850
	FL3020-101	INTERCOSTAL INSTL, wing intermediate LH (A0019)	1	6851-
	760504R	INTERCOSTAL INSTL, wing intermediate RH	1	6701-6850
	FL3020-102	INTERCOSTAL INSTL, wing intermediate RH (A0019)	1	6851-
-11	760504-3L	. INTERCOSTAL ASSY, wing intermediate LH	1	6701-6850
	FL3020-103	. INTERCOSTAL ASSY, wing intermediate LH (A0019)	1	6851-
	760504-3R	. INTERCOSTAL ASSY, wing intermediate RH	1	6701-6850
	FL3020-104	. INTERCOSTAL ASSY, wing intermediate RH (A0019)	1	6851-

Figura e particolare	NDR	DENOMINAZIONE 1 2 3 4 5 6 7	Quant.	Codice applicab.
		Attaching Parts		
3	NAS1203-2	SCREW (80205)	3	
		✲		
	760505L	INTERCOSTAL INSTL, wing beam No. 9 LH	1	6701-6850
	FL3019-101	INTERCOSTAL INSTL, wing beam No. 9 LH (A0019)	1	6851-
	760505R	INTERCOSTAL INSTL, wing beam No. 9 RH	1	6701-6850
	FL3019-102	INTERCOSTAL INSTL, wing beam No. 9 RH (A0019)	1	6851-
-12	760505-3L	INTERCOSTAL ASSY, wing beam No. 9 LH	1	6701-6850
	FL3019-103	INTERCOSTAL ASSY, wing beam No. 9 LH (A0019)	1	6851-
	760505-3R	INTERCOSTAL ASSY, wing beam No. 9 RH	1	6701-6850
	FL3019-104	INTERCOSTAL ASSY, wing beam No. 9 RH (A0019)	1	6851-
		Attaching Parts		
	NAS623-3-8	SCREW (80205)	4	
		✲		
	760506L	INTERCOSTAL INSTL, wing beam No. 12 LH	1	6701-6850
	FL3018-101	INTERCOSTAL INSTL, wing beam No. 12 LH (A0019)	1	6851-
	760506R	INTERCOSTAL INSTL, wing beam No. 12 RH	1	6701-6850
	FL3018-102	INTERCOSTAL INSTL, wing beam No. 12 RH (A0019)	1	6851-
-13	760506-3L	INTERCOSTAL ASSY, wing beam No. 12 LH	1	6701-6850
	FL3018-103	INTERCOSTAL ASSY, wing beam No. 12 LH	1	6851-
	760506-3R	INTERCOSTAL ASSY, wing beam No. 12 RH	1	6701-6850
	FL3018-104	INTERCOSTAL ASSY, wing beam No. 12 RH	1	6851-
		Attaching Parts		
	NAS623-3-3	SCREW (80205)	4	
		✲		
-14	761452-501	CLIP ASSY, aft beam	1	
		Attaching Parts		
-15	NAS1204-7	SCREW (80205)	6	
		✲		
	784668-127	RIB INSTL, No. 2 canted LH	1	6701-6850
	FL3016-101	RIB INSTL, No. 2 canted LH (A0019)	1	6851-
	784668-128	RIB INSTL, No. 2 canted RH	1	6701-6850
	FL3016-102	RIB INSTL, No. 2 canted RH (A0019)	1	6851-
-16	784668-129	RIB ASSY, No. 2 LH	1	6701-6850
	FL3016-103	RIB ASSY, No. 2 LH (A0019)	1	6851-
	784668-130	RIB ASSY, No. 2 RH	1	6701-6850
	FL3016-104	RIB ASSY, No. 2 RH (A0019)	1	6851-
-17	783192-1	BEAM, wing fwd LH	1	
	783192-2	BEAM, wing fwd RH	1	
-18	760315L	BEAM, wing aft LH	1	6701-6850
	FL3017-101	BEAM, wing aft LH (A0019)	1	6851-
	760315R	BEAM, wing aft RH	1	6701-6850
	FL3017-102	BEAM, wing aft RH (A0019)	1	6851-
	783186-1	STRUCTURE INSTL, wing tip LH *(see fig. 18)*	1	
	783186-2	STRUCTURE INSTL, wing tip RH *(see fig. 18)*	1	
	783186-3	STRUCTURE ASSY, wing tip LH *(see fig. 18)*	1	
	783186-4	STRUCTURE ASSY, wing tip RH *(see fig. 18)*	1	
-19	761818	FITTING, wing tip aileron hinge pin	1	
		Attaching Parts		
-20	NAS1104-6	BOLT (80205)	2	
-21	NAS1204-6	SCREW (80205)	2	
-22	AN960-416	WASHER (88044)	4	
-23	763094	SHIM	1	
-24	NAS1291-4	NUT (80205)	2	
		✲		
-25	761221-501	BEAM ASSY, wing tip LH	1	6701-6850
	FL3032-101	BEAM ASSY, wing tip LH (A0019)	1	6851-
	761221-502	BEAM ASSY, wing tip RH	1	6701-6850
	FL3032-102	BEAM ASSY, wing tip RH (A0019)	1	6851-
-26	779477-1	BUSHING, wing tip	1	

Figura e particolare	NDR	DENOMINAZIONE 1 2 3 4 5 6 7	Quant.	Codice applicab.
3-27	783460-1	RIB ASSY, wing station 131 LH	1	
	783460-2	RIB ASSY, wing station 131 RH	1	
-28	783402-1	BEAM, wing fwd outboard LH	1	
	783402-2	BEAM, wing fwd outboard RH	1	
-29	772980-1	FITTING, ejector support wing tip LH	1	
	772980-2	FITTING, ejector support wing tip RH	1	
-30	761602L	INTERCOSTAL ASSY, wing tip LH	1	
	761602R	INTERCOSTAL ASSY, wing tip RH	1	
	761602-3L	FITTING ASSY, wing tip LH	1	
	761602-3R	FITTING ASSY, wing tip RH	1	
-31	762112L	FITTING, wing tip LH	1	
	762112R	FITTING, wing tip RH	1	
	849211-105	STRUCTURE ASSY, intermediate LH	1	6701-6732
	849211-127	STRUCTURE ASSY, intermediate LH	1	6733-6850
	FL3002-105	STRUCTURE ASSY, intermediate LH (A0019)	1	6851-
	849211-106	STRUCTURE ASSY, intermediate RH	1	6701-6732
	849211-128	STRUCTURE ASSY, intermediate RH	1	6733-6850
	FL3002-106	STRUCTURE ASSY, intermediate RH (A0019)	1	6851-
	849231-101	RIB INSTL, inboard leading edge latch enclosing wing *(see fig. 9)*	1	
	849231-102	RIB INSTL, outboard leading edge latch enclosing wing *(see fig. 9)*	1	
	849219-101	CHANNEL INSTL, beam No. 9 LH	1	
	849219-102	CHANNEL INSTL, beam No. 9 RH	1	
	783213-501	CHANNEL INSTL, beam No. 10 wing LH	1	
	783213-502	CHANNEL INSTL, beam No. 10 wing RH	1	
-36	786680-1	RECEPTACLE SUPPORT, wing servo harness	1	
	786680-2	RECEPTACLE SUPPORT, wing servo harness	1	
		Attaching Parts		
	AN520-10R8	SCREW (88044)	2	
		*		
-37	769825-1	RIB, wing station 94 LH	1	
	769825-2	RIB, wing station 94 RH	1	
-38	777742-101	BUSHING ASSY, pylon shear pin	2	
	777742-3	BUSHING, ASSY, pylon shear pin (use 777742-3 if necessary to maintain pylon shear pin alignment)	1	
-39	728022-101	SPRING, wing bushing retainer (only to 777742-101)	1	
	728022-1	SPRING, wing bushing retainer (only to 777742-3)	1	
-40	728023-1	PIN, wing bushing retainer	2	
-41	778272-1	BUSHING, wing pylon shear pin receptacle	1	
-41A	778272-101	BUSHING, pylon shear pin (use 778340-1 if necessary to maintain pylon shear pin alignment)	1	
	778340-1	BUSHING, wing pylon shear pin receptacle	1	
-41B	MS16562-48	PIN (96906)	1	
	786424-101	STRUCTURE INSTL, pylon support LH	1	6701-6732
	786424-105	STRUTTURE INSTL, pylon support LH	1	6733-6850
	786424-107	STRUCTURE INSTL, pylon support LH	1	6851-
	786424-102	STRUCTURE INSTL, pylon support RH	1	6701-6732
	786424-106	STRUCTURE INSTL, pylon support RH	1	6733-6850
	786424-108	STRUCTURE INSTL, pylon support RH	1	6851-
-42	785746-101	RIB ASSY, wing pylon support LH	1	6701-6850
	FL3031-101	RIB ASSY, wing pylon support LH (A0019)	1	6851-
	785746-102	RIB ASSY, wing pylon support RH	1	6701-6850
	FL3031-102	RIB ASSY, wing pylon support RH (A0019)	1	6851-
-43	785746-103	RIB, pylon support LH	1	6701-6850
	FL3031-103	RIB, pylon support LH (A0019)	1	6851-
	785746-104	RIB, pylon support RH	1	6701-6850
	FL3031-104	RIB, pylon support RH (A0019)	1	6851-
-44	767999-3	RETAINER, pylon attachment	1	
-45	761424	NUT, pylon attachment retainer	1	
-46	NAS561P4-12	PIN (80205)	1	
-47	786425-3	RIB, wing station 72 LH	1	

Figura e particolare	NDR	1	2	3	4	5	6	7	DENOMINAZIONE	Quant.	Codice applicab.
3	786425-4								RIB, wing station 72 RH	1	
-48	761046-501								FITTING ASSY, pylon probe LH	1	6701-6732
	761046-105								FITTING ASSY, pylon probe LH	1	6733-
	761046-502								FITTING ASSY, pylon probe RH	1	6701-6732
	761046-106								FITTING ASSY, pylon probe RH	1	6733-
-49	775488-1								BUSHING, pylon probe fitting	1	6701-6732
	852053-103								BUSHING, pylon probe fitting	1	6733-
-50	NAS517-3-26								SCREW (80205)	1	
-51	786427-1								PLUG, aft pylon bolt	1	
-52	792565-1								SEAL, wing station 94 rib end	1	
-52A	849233-101								RIB ASSY, wing pylon support LH	1	
	849233-102								RIB ASSY, wing pylon support RH	1	
-52B	849285-101								RETAINER, attach pylon	1	
-52C	MS16562-35								PIN, attach pylon retainer (96906)	1	
-52D	761424								NUT, attach pylon retainer	1	
-52E	849286-101								BUSHING, socket pylon probe	1	
-52F	MS16562-48								PIN, bushing socket pylon probe (96906)	2	
	786424-3								PLUG AND COVER AND ANGLE INST, pylon *(see fig. 10 and 17)*	1	
	786424-4								PLUG AND COVER AND ANGLE INSTL, pylon *(see fig. 10 and 17)*	1	
-53	NAS517-3-41								SCREW (80205)	1	
-54	762167-3								COVER ASSY, pylon rib	1	
-55	NAS517-3-38								SCREW (80205)	1	
-56	762167-4								COVER ASSY, pylon rib	1	
-57	761402-5								COVER, pylon support	1	
	MS24665-151								COTTER PIN (96906) (NHA 786424-1) (NHA 786424-2)	1	
-58	AN960D6								WASHER (88044) (NHA 786424-1) (NHA 786424-2)	2	
-59	MS20392-1C45								PIN (96906) (NHA 786424-1) (NHA 786424-2)	1	
-60	786937-1								RETAINER ASSY, pylon bolt plug (NHA 786424-1) (NHA 786424-2)	1	
	784076-101								CONDUIT INSTL, wing LH *(see fig. 17)*	1	6701-6850
	FL3027-101								CONDUIT INSTL, wing LH (A0019) *(see fig. 17)*	1	6851-
	784076-102								CONDUIT INSTL, wing RH *(see fig. 17)*	1	6701-6850
	FL3027-102								CONDUIT INSTL, wing RH (A0019) *(see fig. 17)*	1	6851-
	849222-103								TUBE INSTL, leading edge flap LH *(see fig. 9)*	1	6701-6850
	FL3028-103								TUBE INSTL, leading edge flap LH (A0019) *(see fig. 9)*	1	6851-
	849222-104								TUBE INSTL, leading edge flap RH *(see fig. 9)*	1	6701-6850
	FL3028-104								TUBE INSTL, leading edge flap RH (A0019) *(see fig. 9)*	1	6851-
	849208-101								CONDUIT INSTL, wing tip wiring LH *(see fig. 17)*	1	
	849208-102								CONDUIT INSTL, wing tip wiring RH *(see fig. 17)*	1	
	849291-101								CONDUIT INSTL, tip tank ejector wiring LH *(see fig. 17)*	1	
	849291-102								CONDUIT INSTL, tip tank ejector wiring RH *(see fig. 17)*	1	
-61	851175-101								BRACKET, wing rib pylon LH	2	
	851175-102								BRACKET, wing rib pylon RH	2	
	760460L								PIPING INSTL, aileron hydraulic power control LH *(see fig. 11)*	1	
	760460R								PIPING INSTL, aileron hydraulic power control RH *(see fig. 11)*	1	
	783187-1	A.							EQUIPMENT INSTL, wing tip LH *(see fig. 18)*	1	6701-6765
	783187-101	B.							EQUIPMENT INSTL, wing tip LH *(see fig. 18)*	1	6766-
	783187-2	A.							EQUIPMENT INSTL, wing tip RH *(see fig. 18)*	1	6701-6765
	783187-102	B.							EQUIPMENT INSTL, wing tip RH *(see fig. 18)*	1	6766-
	849222-101								LATCH INSTL, leading edge flap LH *(see fig. 9)*	1	6701-6850
	FL3028-101								LATCH INSTL, leading edge flap LH (A0019) *(see fig. 9)*	1	6851-
	849222-102								LATCH INSTL, leading edge flap RH *(see fig. 9)*	1	6701-6850
	FL3028-102								LATCH INSTL, leading edge flap RH (A0019) *(see fig. 9)*	1	6851-
	851028-101								PLUMBING INSTL, fuel LH *(see fig. 10)*	1	
	851028-102								PLUMBING INSTL, fuel RH *(see fig. 10)*	1	
	851025-101								SWITCH INSTL, tip tank ejector safety LH *(see fig. 17)*	1	
	851025-102								SWITCH INSTL, tip tank ejector safety RH *(see fig. 17)*	1	
	775256-101								CYLINDER ASSY, aileron servo LH (see T.O. 9H2-4-66-3) *(see fig. 11)*	1	
	775256-102								CYLINDER ASSY, aileron servo RH (see T.O. 9H2-4-66-3) *(see fig. 11)*	1	
									Partial Breakdown Follows		
-65	NAS514P1032-30								SCREW (80205)	4	

Figura e particolare	NDR	1 2 3 4 5 6 7 DENOMINAZIONE	Quant.	Codice applicab.
3-66	NAS583-2	SCREW (80205)	12	
	NAS517-3-2	SCREW (80205)	12	
-67	770880-1	KEY, aileron servo cylinder	10	
-68	MS16625-1162	RETAINER RING (96906)	10	
-69	EB070	NUT (72962)	10	
-70	S11548-26	RING (97820)	20	
-71	S11113-26	EXPANDER SPRING (97820)	10	
-72	MS28775-220	PACKING, O-ring (96906)	10	
-73	768217-1	RING	10	
-74	MS28775-113	PACKING, O-ring (96906)	10	
-75	770768-1	SPACER, aileron servo cylinder gland piston rod	10	
-76	770525-1	LINK ASSY, aileron servo piston rod	20	
-77	NAS516-1	. FITTING (lubrication) (80205)	1	
-78	762000	NAMEPLATE, aileron servo cylinder	1	
-79	LS4565-25	RING, backup gasket (36659)	10	

A - Removed per AA.1F-104S-OT-120A
B - Reqd per AA.1F-104S-OT-120A
C - Removed per AA.1F-104-OT-760A
D - Reqd per AA.1F-104-OT-760A

Figura e particolare	NDR	DENOMINAZIONE 1 2 3 4 5 6 7	Quant.	Codice applicab.
		LEADING EDGE FLAP AND WING TIP STRUCTURE		
4	786787-1	FLAP INSTL, leading edge LH *(see fig. 2 for reqd)*	REF	
	786787-2	FLAP INSTL, leading edge RH *(see fig. 2 for reqd)*	REF	
-1	851313-105	PIN, leading edge flap	1	
-2	851313-107	PIN, leading edge flap	1	
-3	761888	LOCK, leading edge flap pin	1	
		Attaching Parts		
-4	NAS623-3-3	SCREW (80205)	1	
-5	761495	BEARING, leading edge flap LH and RH	1	
-6	786787-3	FLAP ASSY, leading edge LH	1	
	786787-4	FLAP ASSY, leading edge RH	1	
-7	779475-1	FITTING, leading edge flap torque tube LH *(see fig. 16)*	1	
	779475-2	FITTING, leading edge flap torque tube RH *(see fig. 16)*	1	
		Attaching Parts		
-8	NAS1104-7	BOLT (80205)	4	
-9	NAS1104-9	BOLT (80205)	3	
-10	NAS1204-11	SCREW (80205)	8	
-11	NAS1204-9	SCREW (80205)	12	
-12	NAS1204-7	SCREW (80205)	12	
-13	NAS1204-5	SCREW (80205)	10	
-14	760172-15	SHIM, leading edge flap	1	
	760172-23	SHIM, leading edge flap	AR	
-15	NAS1291-4	NUT (80205)	19	
	786789-1	BEAM ASSY, leading edge flap	1	
	786789-2	BEAM ASSY, leading edge flap	1	
-16	786850-1	HINGE, leading edge flap	1	
	786850-2	HINGE, leading edge flap	1	
		Attaching Parts		
-17	NAS1203-4	SCREW (80205)	39	
-18	NAS1204-4	SCREW (80205)	5	
-19	761363-3L	STRIP, leading edge flap butt LH	1	
	761363-3R	STRIP, leading edge flap butt RH	1	
		Attaching Parts		
-21	NAS623-3-7	SCREW (80205)	25	
-22	NAS623-4-7	SCREW (80205)	3	
-24	NAS623-4-9	SCREW (80205)	2	
-25	760172-18	SHIM, leading edge flap	1	
-26	760172-24	SHIM, leading edge flap	AR	
-27	760172-14	SHIM, leading edge flap	1	
-28	760172-22	SHIM, leading edge flap	AR	
-29	761363-5	STRIP, leading edge flap butt LH	1	
	761363-6	STRIP, leading edge flap butt RH	1	
		Attaching Parts		
-31	NAS623-3-7	SCREW (80205)	12	
-33	NAS623-4-9	SCREW (80205)	2	
-34	786787-7	SHIM, leading edge flap	1	
-35	786787-5	SHIM, leading edge flap	2	
-36	764886-13	SEAL, leading edge flap	1	
-37	764886-11	PLATE, leading edge flap	1	
		Attaching Parts		
-38	AN507-832R10	SCREW (88044)	10	
-39	761364	PIN ASSY, leading edge flap lock	1	
		Attaching Parts		
-40	NAS1204-5	SCREW (80205)	7	

Wing Structure

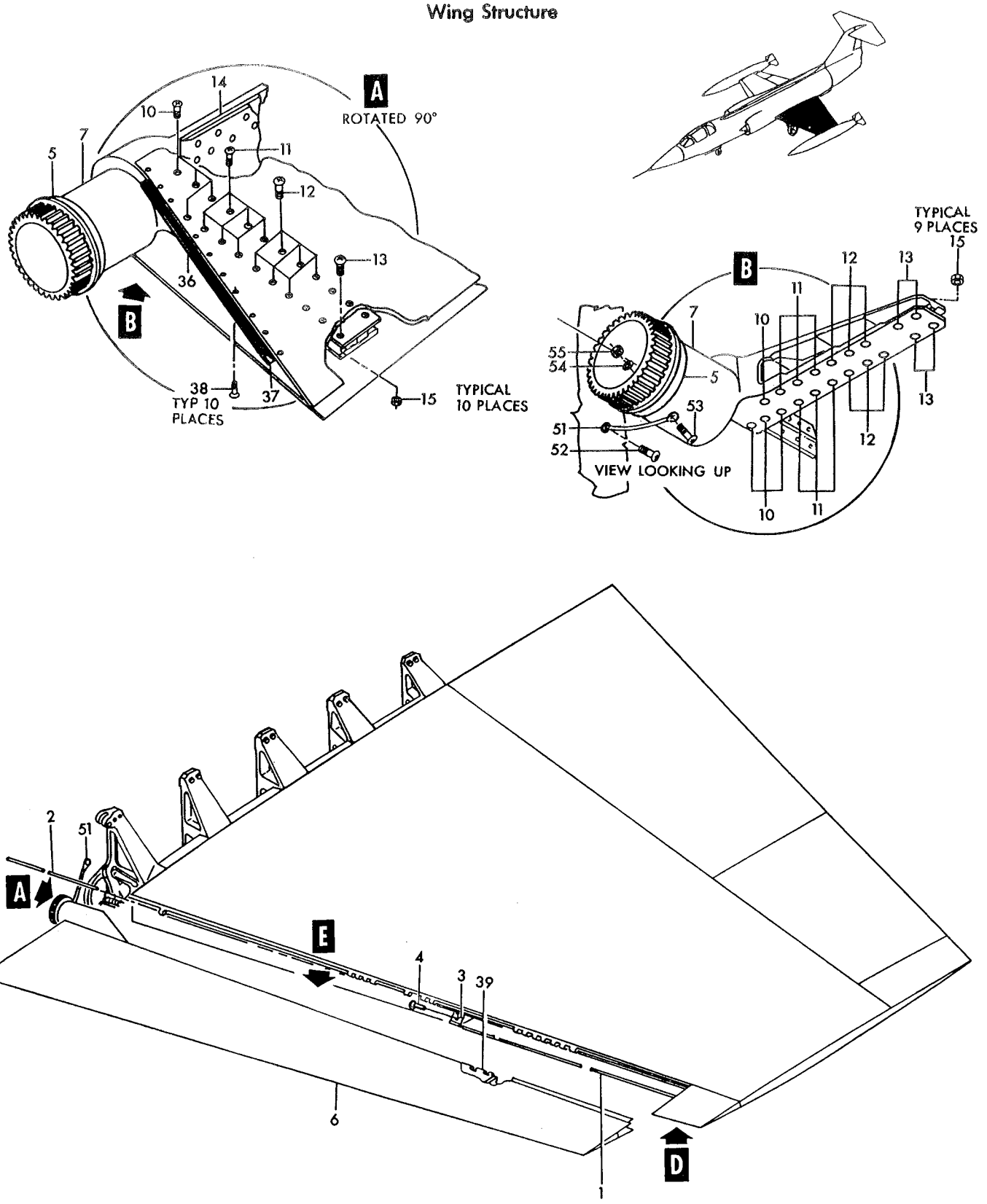

Figure 4— Leading Edge Flap and Wing Tip Structure (Sheet 1 of 2)

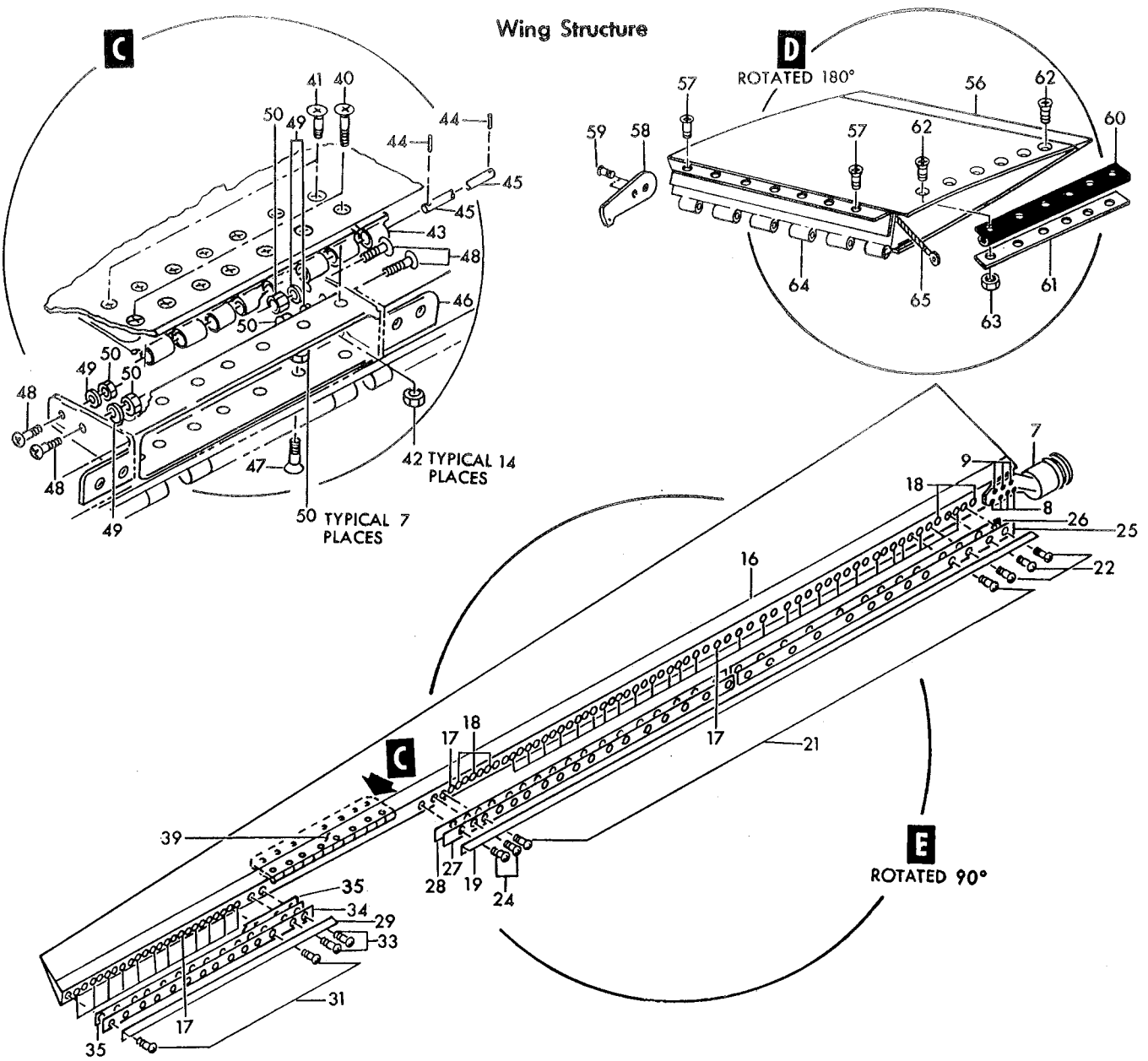

Figure 4— Leading Edge Flap and Wing Tip Structure (Sheet 2 of 2)

Figura e particolare	NDR	DENOMINAZIONE (1 2 3 4 5 6 7)	Quant.	Codice applicab.
4-41	NAS1204-7	SCREW (80205)	7	
-42	NAS1291-4	NUT (80205)	14	
		☼		
-43	761364-3	HINGE, leading edge flap lock	1	
-44	NAS561P2-6	PIN (80205)	2	
-45	761661	PIN, leading edge flap lock	1	
-46	786790-1	FITTING, leading edge flap beam LH	1	
	786790-2	FITTING, leading edge flap beam RH	1	
		Attaching Parts		
-47	NAS1204-5	SCREW (80205)	7	
-48	NAS623-4-4	SCREW (80205)	4	
-49	AN960D416	WASHER (88044)	4	
-50	NAS1291-4	NUT (80205)	11	
		☼		
-51	MS25083-2BC10	JUMPER (96906)	1	
		Attaching Parts		
-52	NAS623-3-2	SCREW (80205)	1	
-53	NAS1104-5	BOLT (RH only) (80205)	1	
-54	AN960-416	WASHER (RH only) (88044)	1	
-55	NAS1291-4	NUT (RH only) (80205)	1	
		☼		
-56	796742-3	LEADING EDGE ASSY, LH *(see fig. 2 for reqd)*	REF	
	796742-4	LEADING EDGE ASSY, RH *(see fig. 2 for reqd)*	REF	
		Attaching Parts		
-57	NAS1203-3	SCREW (used with 796742-3 and 796742-2) (80205)	7	
		☼		
-58	760183-22L	PLATE, leading edge wing LH	1	
	760183-22R	PLATE, leading edge wing RH	1	
		Attaching Parts		
-59	NAS1203-3	SCREW (80205)	2	
		☼		
-60	764887-7	SEAL, leading edge wing LH	1	
	764887-8	SEAL, leading edge wing RH	1	
-61	764887-13	STRIP, leading edge wing	1	
		Attaching Parts		
-62	AN507-632R8	SCREW (88044)	6	
-63	MS21042L06	NUT (96906)	6	
		☼		
	762228-7	BEAM ASSY, leading edge wing LH	1	
	762228-8	BEAM ASSY, leading edge wing RH	1	
-64	762226L	HINGE, wing tip leading edge LH	1	
	762226R	HINGE, wing tip leading edge RH	1	
-65	MS25083-2BB4	JUMPER (96906)	1	
		Attaching Parts		
	NAS623-3-3	SCREW (80205)	1	
	AN960D10	WASHER (88044)	1	
		☼		

Figura e particolare	NDR	DENOMINAZIONE 1 2 3 4 5 6 7	Quant.	Codice applicab.
		TRAILING EDGE FLAP, AILERON AND WING TIP STRUCTURE		
5	761719-101	AILERON INSTL, wing LH *(see fig. 2 for reqd)*	REF	
	761719-102	AILERON INSTL, wing RH *(see fig. 2 for reqd)*	REF	
-1	762640-501	FAIRING ASSY, aileron outboard LH	1	6701-6765
	762640-101	FAIRING ASSY, aileron outboard LH	1	6766-
	762640-502	FAIRING ASSY, aileron outboard RH	1	6701-6765
	762640-102	FAIRING ASSY, aileron outboard RH	1	6766-
		Attaching Parts		
-2	NAS1203-3	SCREW (80205)	1	
-3	NAS1203-2	SCREW (80205)	3	
-4	NAS1204-5	SCREW (80205)	2	
-5	NAS623-3-2	SCREW (80205)	1	
-6	AN960D10	WASHER (88044)	2	
-7	MS21042L3	NUT (96906)	1	
-8	760176-501	AILERON ASSY, wing LH	1	
	760176-502	AILERON ASSY, wing RH	1	
	762223	SPACER, trailing edge aileron	10	
-9	760176-16L	FAIRING, wing aileron inboard LH	1	
	760176-16R	FAIRING, wing aileron inboard RH	1	
		Attaching Parts		
-10	NAS1204-5	SCREW (80205)	13	
-11	761437L	BEAM, aileron LH	1	
	761437R	BEAM, aileron RH	1	
		Attaching Parts		
-12	NAS1204-6	SCREW (80205)	14	
-13	NAS334CPA7	SCREW (80205)	2	
-14	NAS1203-2	SCREW (80205)	7	
-15	NAS1203-3	SCREW (80205)	3	
-16	NAS1204-5	SCREW (80205)	15	
-17	NAS623-3-3	SCREW (80205)	1	
-18	AN960D10	WASHER (88044)	2	
-19	MS21042L3	NUT (96906)	2	
-20	2752-048	BARREL NUT (72962)	2	
-21	LS4893-4	RETAINER, barrel nut (36659)	2	
-22	MS27253-1	NAMEPLATE (96906)	1	
-23	728313-1	SCREW, aileron hinge pin lock	1	
-24	770528-1	ADAPTER, aileron hinge pin lock	1	
-25	XRC315	RING, retaining (76665)	1	
-26	2752-048	BARREL NUT (72962)	1	
-27	LS4893-4	RETAINER, barrel nut (36659)	1	
-28	MS25083-1BB4	JUMPER (96096)	1	
		Attaching Parts		
-29	NAS623-3-2	SCREW (80205)	1	
-30	NAS1203-4	SCREW (80205)	1	
-31	AN960D10	WASHER (88044)	2	
-32	MS21042L3	NUT (96906)	1	
-33	MS25083-1BB3	JUMPER (96906)	1	
		Attaching Parts		
-34	NAS1203-4	SCREW (80205)	1	
-35	AN960D10	WASHER (88044)	1	
-36	AN960-10L	WASHER (88044)	1	
-37	MS21042L3	NUT (96906)	2	
-38	AN175H22	BOLT (88044)	1	
-39	AN960D516	WASHER (88044)	2	
-40	AN310-5	NUT (88044)	1	

Wing Structure

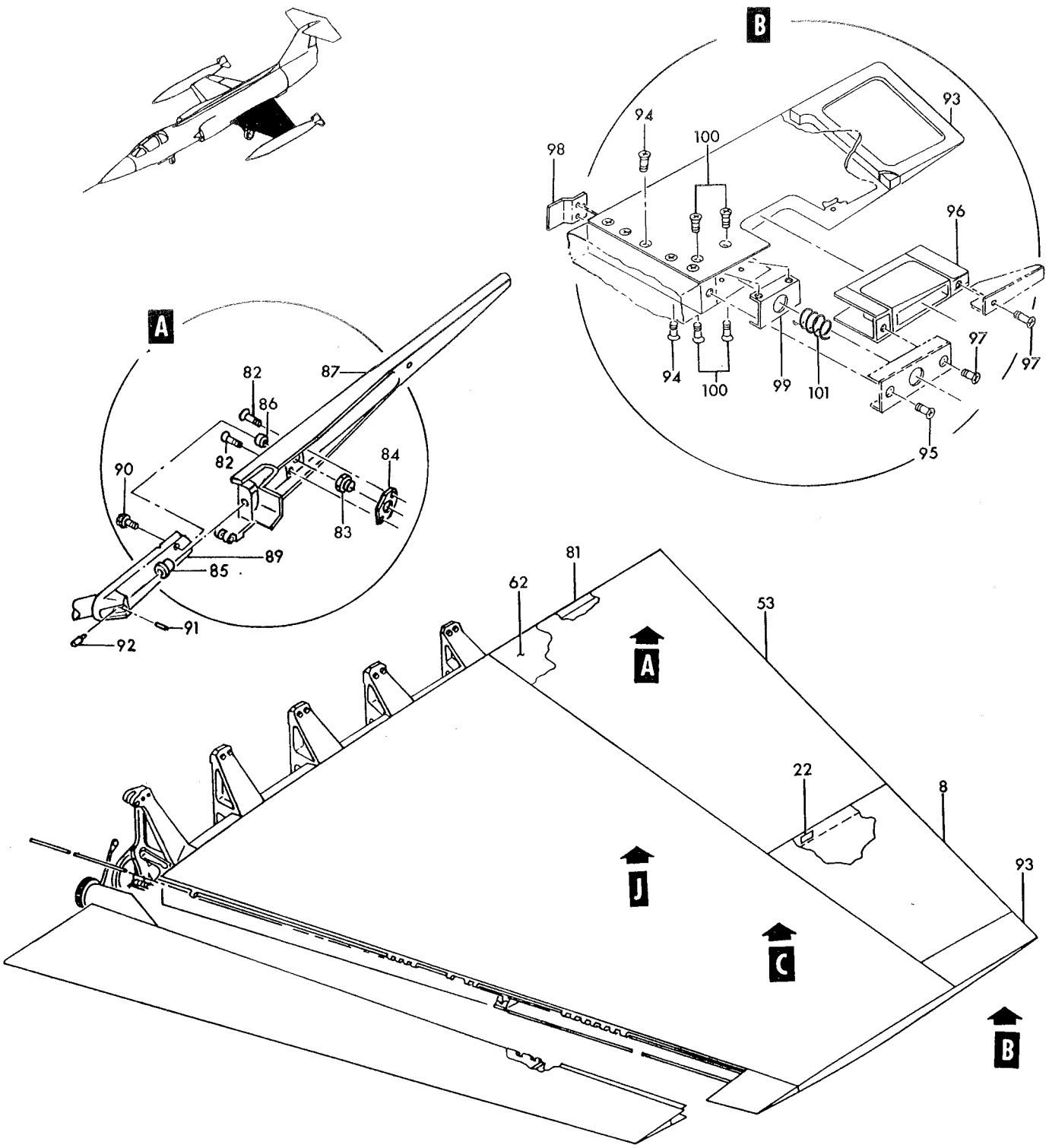

Figure 5– Trailing Edge Flap, Aileron and Wing Tip Structure (Sheet 1 of 3)

Wing Structure

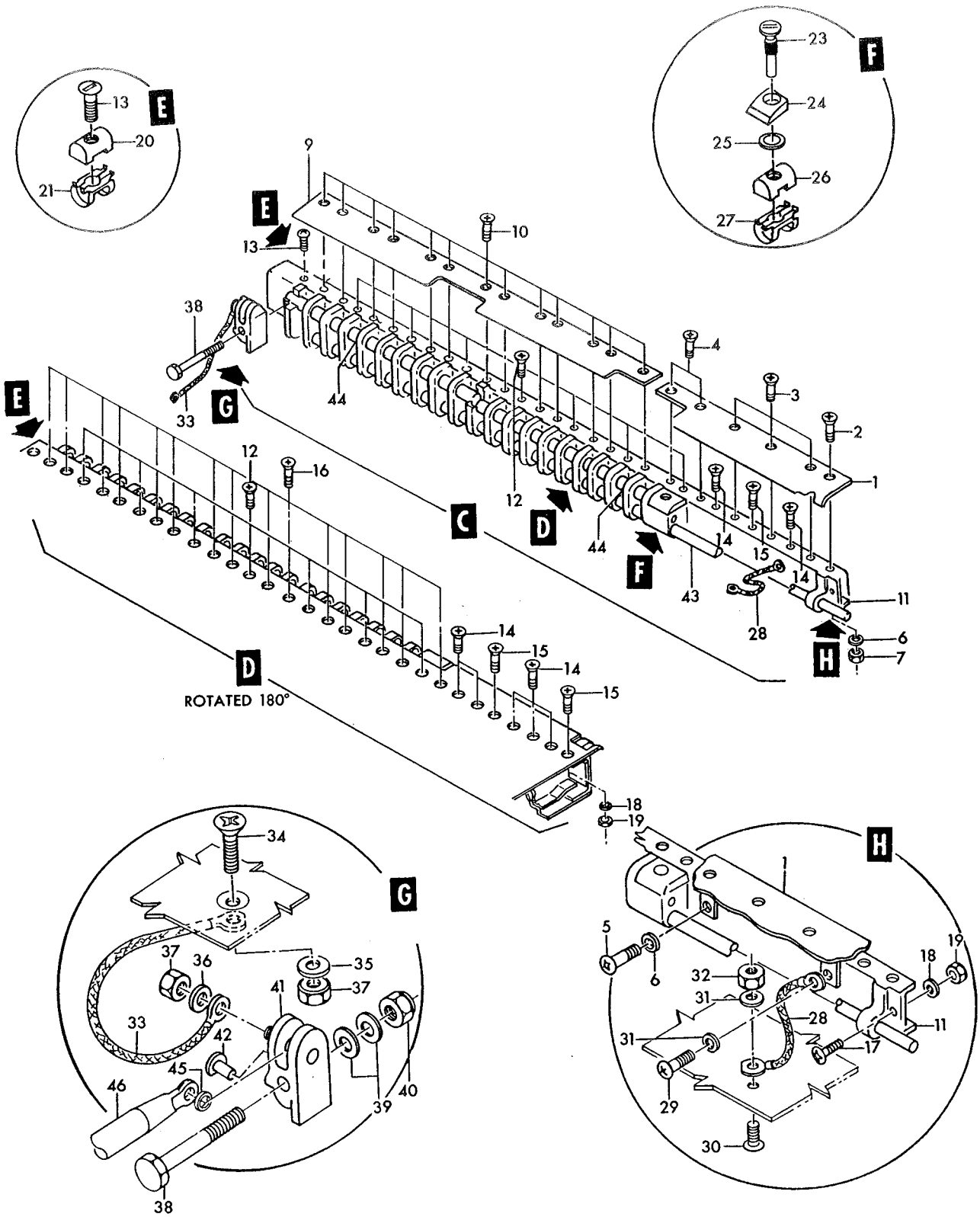

Figure 5— Trailing Edge Flap, Aileron and Wing Tip Structure (Sheet 2 of 3)

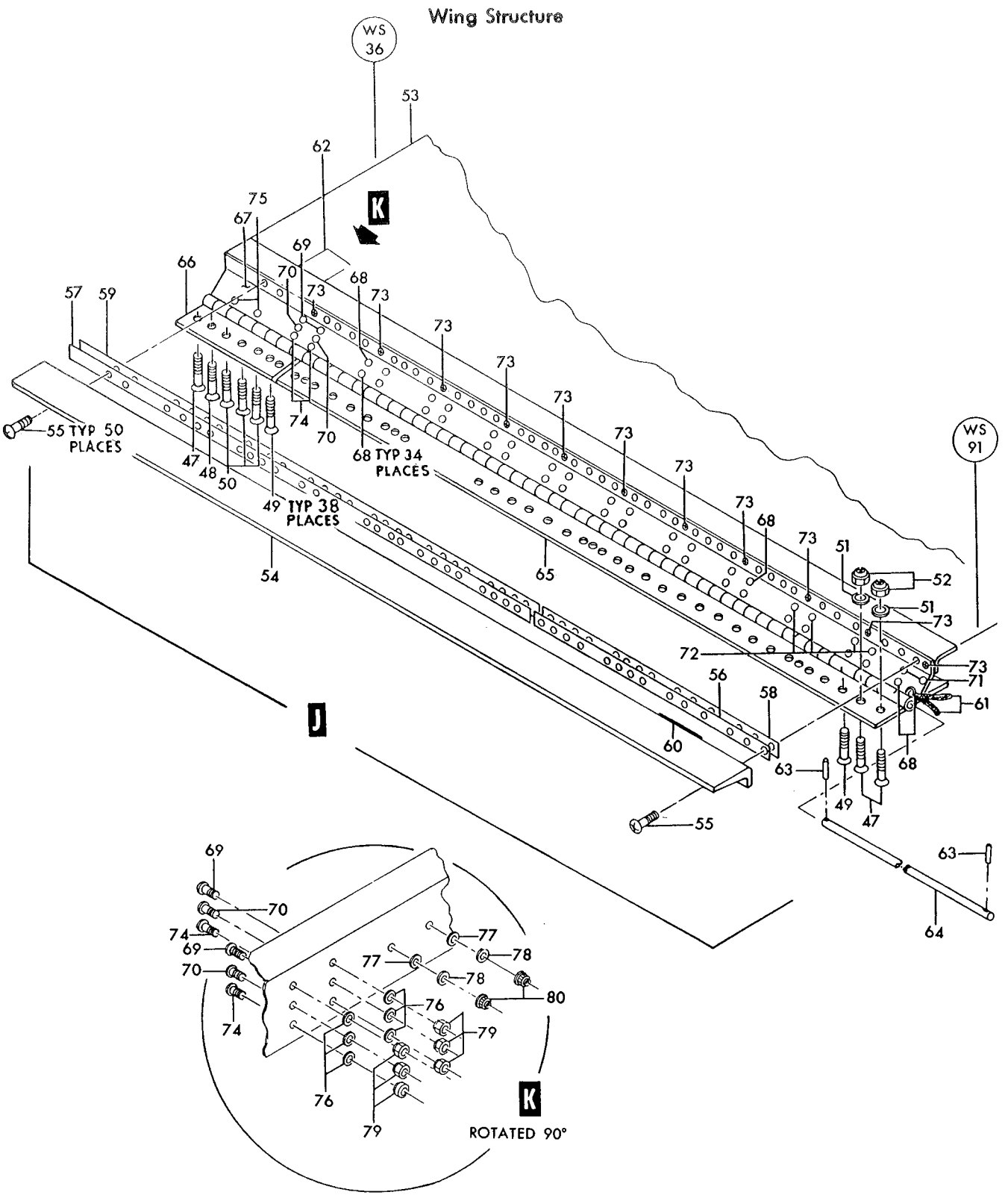

Figure 5—Trailing Edge Flap, Aileron and Wing Tip Structure (Sheet 3 of 3)

Figura e particolare	NDR	DENOMINAZIONE	Quant.	Codice applicab.
5-	MS24665-134	COTTER PIN (96906)	1	
-41	792972-1	CLEVIS, aileron follow up rod LH	1	
	792972-2	CLEVIS, aileron follow up rod RH	1	
-42	761480	PIN, aileron follow up rod clevis	1	
-43	799122-101	PIN, aileron hinge	1	
-44	761882	PIN, aileron crank	2	
-45	AN960-516	WASHER (88044)	1	
-46	51550-7	JACKSCREW, mechanical LH (96212) (Lockheed spec dwg 669312-9) (see T.O. 8D1-8-116-4) *(see fig. 11 for reqd)*	REF	
	51550-8	JACKSCREW, mechanical RH (96212) (Lockheed spec dwg 669312-10) (see T.O. 8D1-8-116-4) *(see fig. 11 for reqd)*	REF	
	784670-501	FLAP INSTL, trailing edge LH *(see fig. 2 for reqd)*	REF	
	784670-502	FLAP INSTL, trailing edge RH *(see fig. 2 for reqd)*	REF	
-47	NAS1204-4	SCREW (80205)	3	
-48	NAS1204-3	SCREW (80205)	1	
-49	NAS1204-8	SCREW (80205)	38	
-50	NAS1204-9	SCREW (80205)	3	
-51	AN960D416	WASHER (88044)	2	
-52	MS21042L4	NUT (96906)	2	
-53	784670-101	FLAP ASSY, trailing edge LH	1	
	784670-102	FLAP ASSY, trailing edge RH	1	
-54	784669-1	ANGLE, trailing edge flap butt LH	1	
	784669-2	ANGLE, trailing edge flap butt RH	1	
		Attaching Parts		
-55	NAS623-4-8	SCREW (80205)	40	
-56	760175-38	SHIM, trailing edge flap	AR	
-57	760175-40	SHIM, trailing edge flap	AR	
-58	760175-39	SHIM, trailing edge flap	AR	
-59	760175-41	SHIM, trailing edge flap	AR	
-60	770682-1	SHIM, trailing edge flap angle	AR	
	770682-3	SHIM, trailing edge falp angle	AR	
-61	MS25083-1BB5	JUMPER (96906)	2	
-62	760175-42	SHIM, trailing edge flap	AR	
-63	NAS561P2-8	PIN (80205)	2	
-64	851313-109	PIN, trailing edge flap hinge	1	
-65	761830L	HINGE, trailing edge flap half LH	1	
	761830R	HINGE, trailing edge flap half RH	1	
-66	761708L	HINGE, trailing edge flap inboard half LH	1	
	761708R	HINGE, trailing edge flap inboard half RH	1	
-67	761828L	HINGE, trailing edge flap beam cap LH	1	
	761828R	HINGE, trailing edge flap beam cap RH	1	
		Attaching Parts		
-68	NAS623-3-3	SCREW (80205)	34	
-69	NAS623-3-5	SCREW (80205)	2	
-70	NAS623-3-6	SCREW (80205)	2	
-71	NAS1203-2	SCREW (80205)	2	
-72	NAS1203-4	SCREW (80205)	4	
-73	NAS1204-4	SCREW (80205)	11	
-74	NAS1203-7	SCREW (80205)	2	
-75	MS20004-8	BOLT (96906)	2	
-76	AN960D10	WASHER (88044)	46	
-77	MS20002C4	WASHER (96906)	2	
-78	MS20002-4	WASHER (96906)	2	
-79	MS21042L3	NUT (96906)	46	
-80	EB048	NUT (72962)	2	
-81	761704L	RIB ASSY, trailing edge flap LH	1	
	761704R	RIB ASSY, trailing edge flap RH	1	
-82	NAS1203-13	SCREW (80205)	2	

Figura e particolare	NDR	DENOMINAZIONE 1 2 3 4 5 6 7	Quant.	Codice applicab.
5	776027-1	NUT ASSY, trailing edge flap drive fitting	1	
-83	765403-1	NUT, trailing edge flap drive fitting	1	
-84	761706	RETAINER, trailing edge flap nut	1	
-85	761707	BUSHING, trailing edge flap	1	
-86	LS2326-9S0-495	BUSHING, plain (36659)	1	
-87	761704-3L	RIB, trailing edge flap LH	1	
	761704-3R	RIB, trailing edge flap RH	1	
	761490L	FITTING ASSY, flap drive LH *(see fig. 16 for reqd)*	REF	
	761490R	FITTING ASSY, flap drive RH *(see fig. 16 for reqd)*	REF	
-89	761490-3L	FITTING, flap drive LH	1	
	761490-3R	FITTING, flap drive RH	1	
		Attaching Parts		
-90	726786-1	BOLT, drive fitting trailing edge	1	
-91	NAS561P4-14	ROLL PIN (80205)	1	
-92	762387	PIN, flap drive fitting	1	
	782562-101	TRAILING EDGE INSTL, wing LH *(see fig. 2 for reqd)*	REF	
	782562-102	TRAILING EDGE INSTL, wing RH *(see fig. 2 for reqd)*	REF	
-93	782562-103	TRAILING EDGE ASSY, wing tip LH	1	
	782562-104	TRAILING EDGE ASSY, wing tip RH	1	
		Attaching Parts		
-94	NAS1203-4	SCREW (80205)	10	
-95	NAS1203-3	SCREW (80205)	1	
-96	767261-1	HOUSING ASSY, wing tip	1	
		Attaching Parts		
-97	NAS1203-3	SCREW (80205)	2	
-98	66B42036	PLATE (98749) (reqd per T.O. 1F-104-298)	1	
-99	782563-1	BRACKET ASSY, trailing edge LH *(see fig. 17)*	1	
	782563-2	BRACKET ASSY, trailing edge RH *(see fig. 17)*	1	
		Attaching Parts		
-100	NAS1203-3	SCREW (80205)	4	
-101	728258-1	SPRING, wing trailing edge	1	

Figura e particolare	NDR	DENOMINAZIONE 1 2 3 4 5 6 7	Quant.	Codice applicab.
		WING FITTINGS AND ATTACHING PARTS		
6	783195-1	FITTING ASSY, wing No. 1 LH *(see fig. 3 for reqd)*	REF	6701-6850
	FL3011-101	FITTING ASSY, wing No. 1 LH (A0019) *(see fig. 3 for reqd)*	REF	6851-
	783195-2	FITTING ASSY, wing No. 1 RH *(see fig. 3 for reqd)*	REF	6701-6850
	FL3011-102	FITTING ASSY, wing No. 1 RH (A0019) *(see fig. 3 for reqd)*	REF	6851-
- 1	783195-7	FITTING ASSY, wing No. 1 LH	1	6701-6850
	FL3011-105	FITTING ASSY, wing No. 1 LH (A0019)	1	6851-
	783195-8	FITTING ASSY, wing No. 1 RH	1	6701-6850
	FL3011-106	FITTING ASSY, wing No. 1 RH (A0019)	1	6851-
		Attaching Parts		
- 2	NAS1155-8	SCREW (80205)	4	
- 3	NAS1155-8	SCREW (80205)	4	6701-6850
	NAS1155-9	SCREW (80205)	4	6851-
- 4	NAS1155-9	SCREW (80205)	2	
- 5	NAS1155-9	SCREW (80205)	2	6701-6850
	NAS1155-10	SCREW (80205)	2	6851-
- 6	NAS1155-11	SCREW (80205)	4	
- 7	NAS1155-11	SCREW (80205)	4	6701-6850
	NAS1155-12	SCREW (80205)	4	6851-
- 8	NAS1155-12	SCREW (80205)	2	
- 9	NAS1155-12	SCREW (80205)	2	6701-6850
	NAS1155-13	SCREW (80205)	2	6851-
-10	NAS1155-13	SCREW (80205)	2	
-11	NAS1155-13	SCREW (80205)	2	6701-6850
	NAS1155-14	SCREW (80205)	2	6851-
-12	NAS1155-15	SCREW (80205)	3	
-13	NAS1155-15	SCREW (80205)	3	6701-6850
	NAS1155-16	SCREW (80205)	3	6851-
-14	NAS1155-16	SCREW (80205)	4	
-15	NAS1155-17	SCREW (80205)	1	
-16	NAS1155-17	SCREW (80205)	3	6701-6850
	NAS1155-18	SCREW (80205)	3	6851-
-17	NAS1155-17	SCREW (80205)	1	6701-6850
	NAS1155-19	SCREW (80205)	1	6851-
-18	NAS1155-18	SCREW (80205)	1	6701-6850
	NAS1155-19	SCREW (80205)	1	6851-
-19	NAS1104-5	BOLT (80205)	2	
-20	NAS1108-10D	BOLT (80205)	1	
-21	AN960-816	WASHER (88044)	1	
-22	AN960D516	WASHER (88044)	20	
-23	784065-1	CLIP ASSY, wing fillet	1	
	784065-2	CLIP ASSY, wing fillet	1	
-24	784075-1	CLIP ASSY, wing fillet	1	
	784075-2	CLIP ASSY, wing fillet	1	
-25	NAS43DD5-6	SPACER (80205)	1	
-26	NAS43DD5-8	SPACER (80205)	1	
-27	MS21042L5	NUT (96906)	24	
-28	NAS1022A8	NUT (80205)	1	
		*		
	783195-3	FITTING-LH (match comp do not stk sep)	1	6701-6850
	FL3011-103	FITTING-LH (A0019) (match comp do not stk sep)	1	6851-
	783195-4	FITTING-RH (match comp do not stk sep)	1	6701-6850
	FL3011-104	FITTING-RH (A0019) (match comp do not stk sep)	1	6851-
	783195-5	CAP ASSY, No. 1 fitting (match comp do not stk sep)	1	6701-6850
	FL3011-107	CAP ASSY, No. 1 fitting (A0019) (match comp do not stk sep)	1	6851-
-29	760623	CAP, No. 1 fitting	1	
-30	NAS516-1	FITTING (80205)	1	
-31	MS20005H34	BOLT (96906) (1 reqd only LH and 2 reqd only RH)	3	
-32	MS2000H38	BOLT (used on 783195-7 and FL3011-105) (96906) *(see fig. 17)*	1	
-33	MS20002C5	WASHER (96906) *(see fig. 17)*	2	

Wing Structure

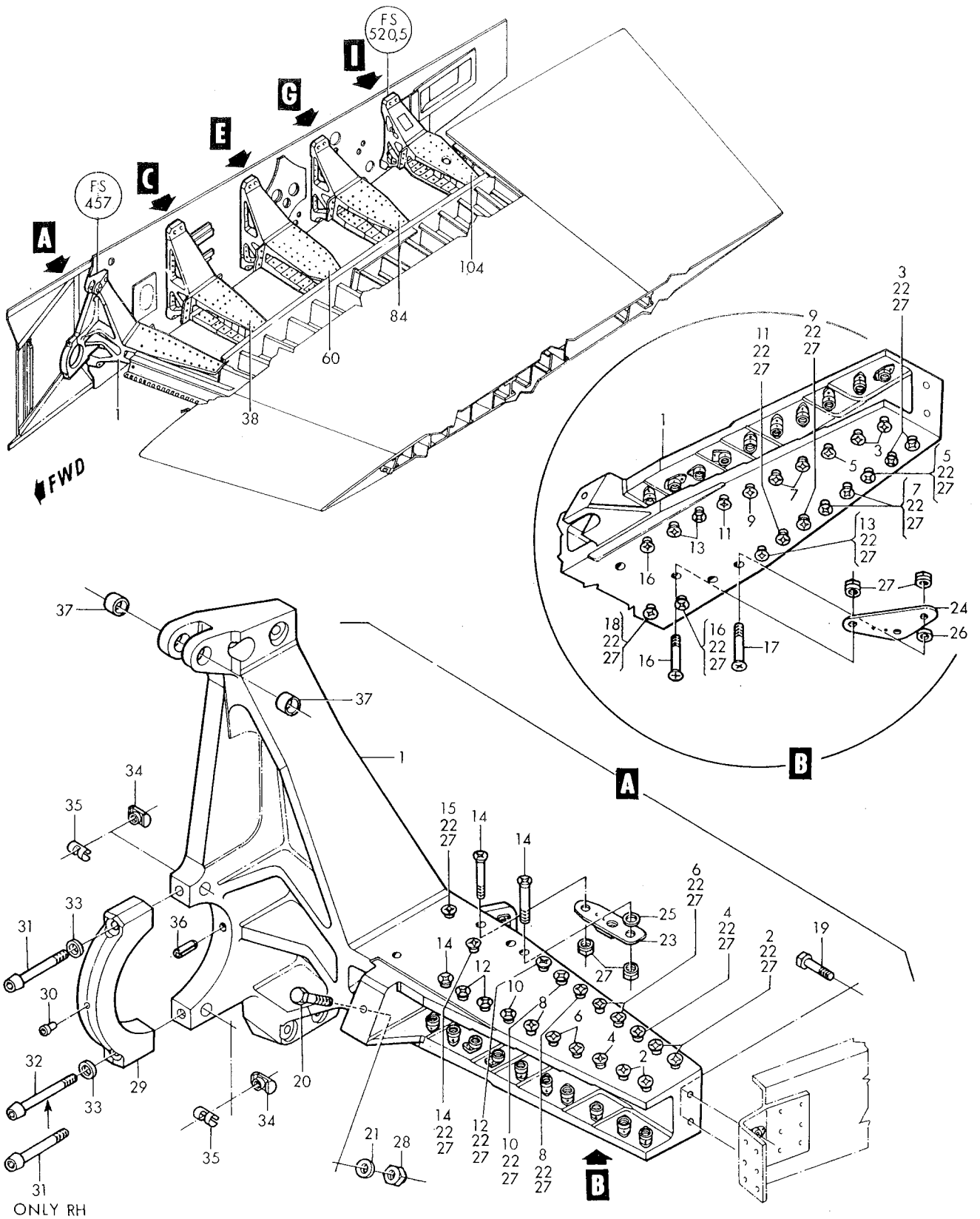

Figure 6-Wing Fittings and Attaching Parts (Sheet 1 of 3)

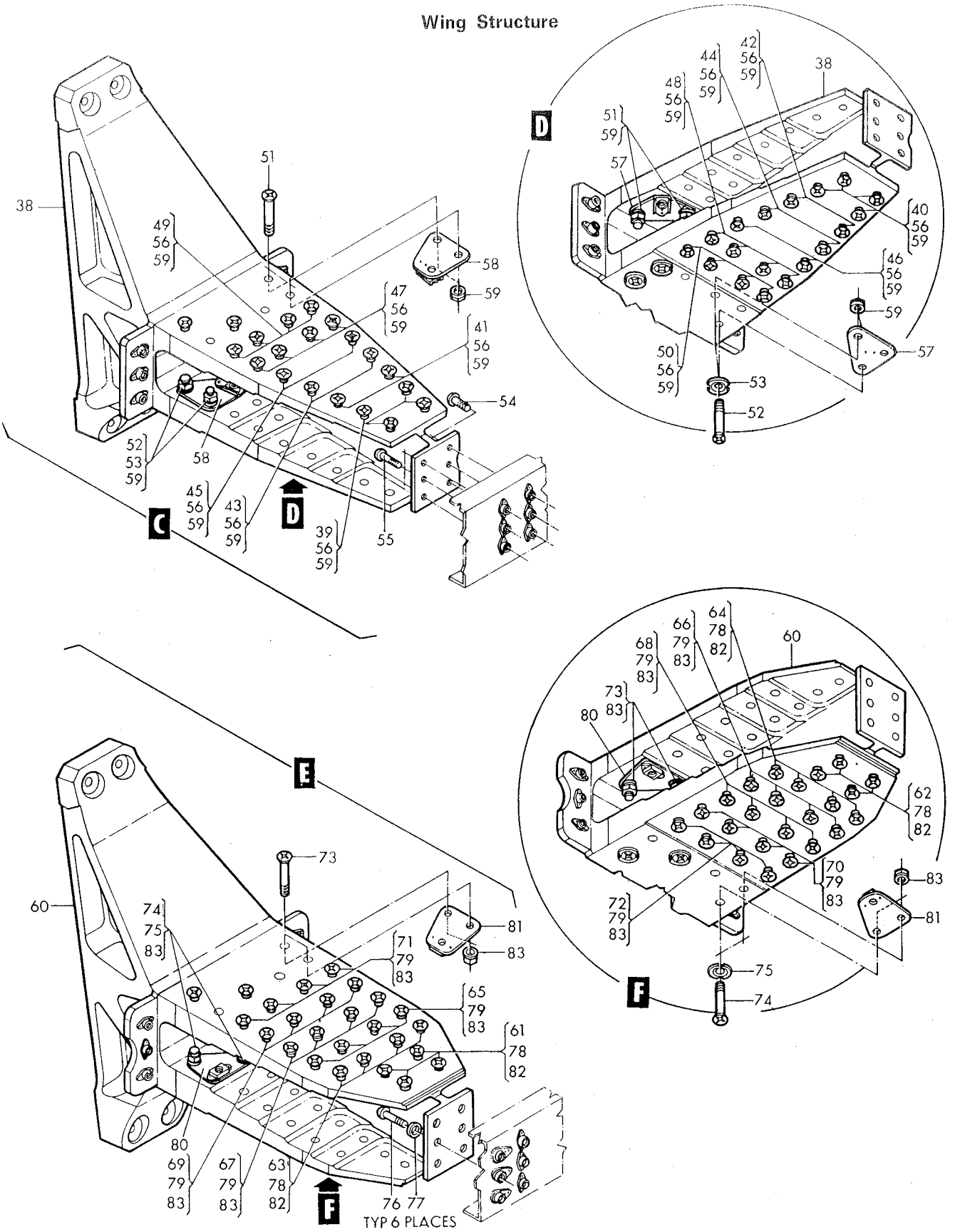

Figure 6-Wing Fittings and Attaching Parts (Sheet 2 of 3)

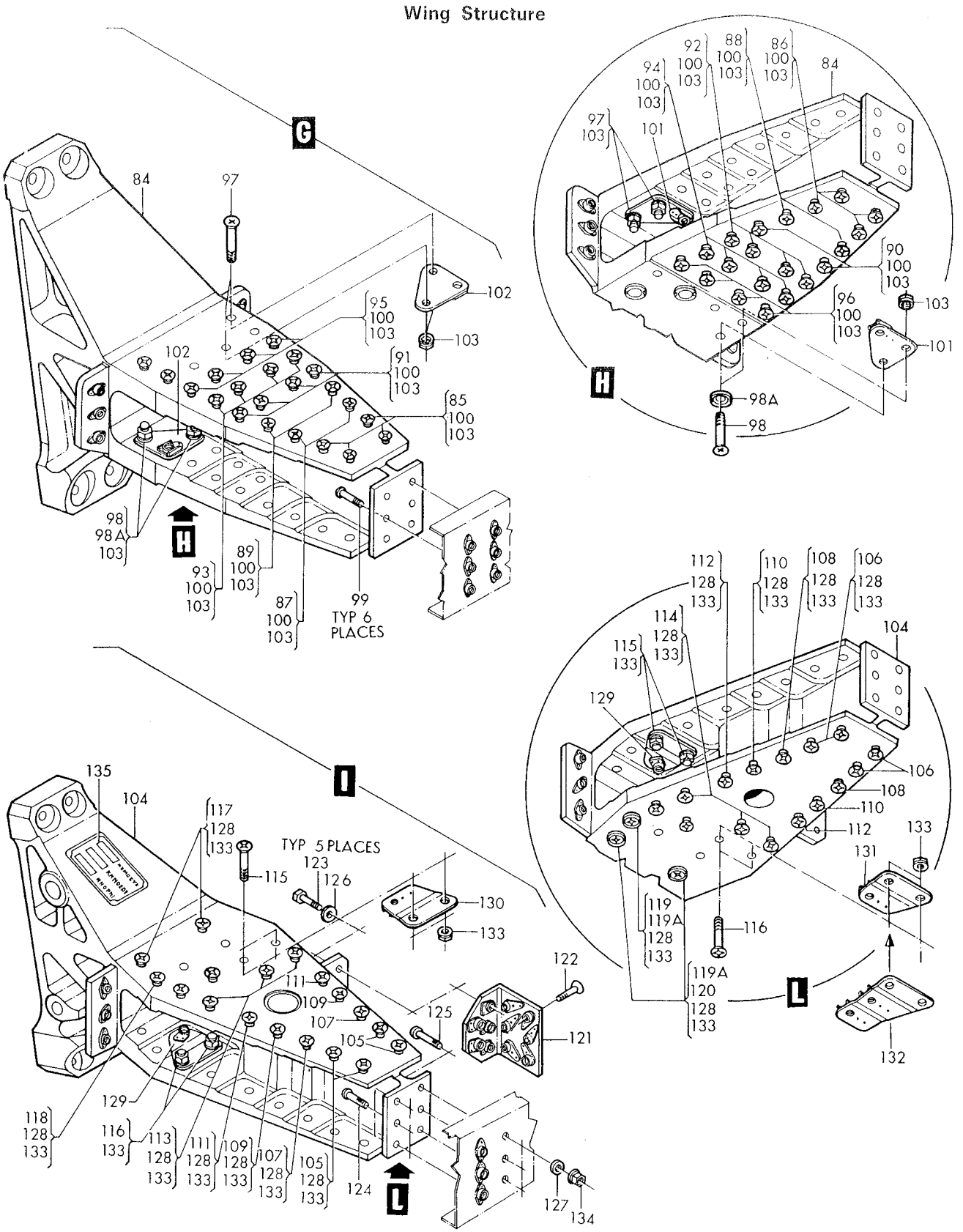

Figure 6-Wing Fittings and Attaching Parts (Sheet 3 of 3)

Figura e particolare	NDR	DENOMINAZIONE 1 2 3 4 5 6 7	Quant.	Codice applicab.
6-34	SL40-524	NUT, barrel (97393)	2	
-35	LS4893-5C	RETAINER, barrel nut (36659)	2	
-36	NAS561P6-10	PIN (80205)	1	
-37	783990-1	BUSHING, wing fitting No. 1	2	
-38	783196-101	FITTING ASSY, wing No. 2 LH *(see fig. 3 for reqd)*	REF	6701-6850
	FL3012-101	FITTING ASSY, wing No. 2 LH (A0019) *(see fig. 3 for reqd)*	REF	6851-
	783196-102	FITTING ASSY, wing No. 2 RH *(see fig. 3 for reqd)*	REF	6701-6850
	FL3012-102	FITTING ASSY, wing No. 2 RH (A0019) *(see fig. 3 for reqd)*	REF	6851-
		Attaching Parts		
-39	NAS1155-8	SCREW (80205)	4	
-40	NAS1155-8	SCREW (80205)	4	6701-6850
	NAS1155-9	SCREW (80205)	4	6851-
-41	NAS1155-10	SCREW (80205)	2	
-42	NAS1155-10	SCREW (80205)	2	6701-6850
	NAS1155-11	SCREW (80205)	2	6851-
-43	NAS1155-11	SCREW (80205)	2	
-44	NAS1155-12	SCREW (80205)	2	6701-6850
	NAS1155-13	SCREW (80205)	2	6851-
-45	NAS1155-12	SCREW (80205)	2	
-46	NAS1155-13	SCREW (80205)	2	6701-6850
	NAS1155-14	SCREW (80205)	2	6851-
-47	NAS1155-13	SCREW (80205)	4	
-48	NAS1155-15	SCREW (80205)	4	6701-6850
	NAS1155-16	SCREW (80205)	4	6851-
-49	NAS1155-15	SCREW (80205)	4	
-50	NAS1155-17	SCREW (80205)	4	6701-6850
	NAS1155-18	SCREW (80205)	4	6851-
-51	NAS1155-16	SCREW (80205)	4	
-52	NAS1155-17	SCREW (80205)	4	6701-6850
	NAS1155-20	SCREW (80205)	4	6851-
-53	FL3024-101	WASHER (A0019)	4	6851-
-54	NAS623-4-3	SCREW (80205)	3	6701-6850
	NAS1104-5	SCREW (80205)	3	6851-
-55	NAS623-4-4	SCREW (80205)	3	6701-6850
	NAS1104-4	SCREW (80205)	3	6851-
-56	AN960D516	WASHER (88044)	36	
-57	784066-1	CLIP ASSY, wing fillet	2	
	784066-2	CLIP ASSY, wing fillet	2	
-58	784067-1	CLIP ASSY, wing fillet	2	
	784067-2	CLIP ASSY, wing fillet	2	
-59	MS21042L5	NUT (96906)	44	
-60	783197-101	FITTING ASSY, wing No. 3 LH *(see fig. 3 for reqd)*	REF	6701-6850
	FL3013-101	FITTING ASSY, wing No. 3 LH (A0019) *(see fig. 3 for reqd)*	REF	6851-
	783197-102	FITTING ASSY, wing No. 3 RH *(see fig. 3 for reqd)*	REF	6701-6850
	FL3013-102	FITTING ASSY, wing No. 3 RH (A0019) *(see fig. 3 for reqd)*	REF	6851-
		Attaching Parts		
-61	NAS1155-9	SCREW (80205)	4	
-62	NAS1155-9	SCREW (80205)	4	6701-6850
	NAS1155-10	SCREW (80205)	4	6851-
-63	NAS1155-10	SCREW (80205)	4	
-64	NAS1155-11	SCREW (80205)	4	6701-6850
	NAS1155-12	SCREW (80205)	4	6851-
-65	NAS1156-11	SCREW (80205)	4	
-66	NAS1156-12	SCREW (80205)	4	6701-6850
	NAS1156-13	SCREW (80205)	4	6851-
-67	NAS1156-12	SCREW (80205)	4	
-68	NAS1156-14	SCREW (80205)	4	6701-6850
	NAS1156-15	SCREW (80205)	4	6851-
-69	NAS1156-14	SCREW (80205)	4	

Figura e particolare	NDR	1 2 3 4 5 6 7 DENOMINAZIONE	Quant.	Codice applicab.
6-70	NAS1156-17	SCREW (80205)	4	6701-6850
	NAS1156-18	SCREW (80205)	4	6851-
-71	NAS1156-15	SCREW (80205)	4	
-72	NAS1156-19	SCREW (80205)	4	6701-6850
	NAS1156-20	SCREW (80205)	4	6851-
-73	NAS1156-18	SCREW (80205)	4	
-74	NAS1156-21	SCREW (80205)	4	6701-6850
	NAS1156-23	SCREW (80205)	4	6851-
-75	FL3025-101	WASHER (A0019)	4	6851-
-76	NAS623-4-4	SCREW (80205)	6	6701-6850
	NAS1104-4	SCREW (80205)	6	6851-
-77	AN960D416	WASHER (88044)	6	
-78	AN960D516	WASHER (88044)	16	
-79	AN960D616	WASHER (88044)	32	
-80	784068-1	CLIP ASSY, wing fillet	2	
	784068-2	CLIP ASSY, wing fillet	2	
-81	784069-1	CLIP ASSY, wing fillet	2	
	784069-2	CLIP ASSY, wing fillet	2	
-82	MS21042L5	NUT (96906)	16	
-83	MS21042L6	NUT (96906)	40	
		*		
-84	783198-1	FITTING ASSY, wing No. 4 LH *(see fig. 3 for reqd)*	REF	6701-6850
	FL3014-101	FITTING ASSY, wing No. 4 LH (A0019) *(see fig. 3 for reqd)*	REF	6851-
	783198-2	FITTING ASSY, wing No. 4 RH *(see fig. 3 for reqd)*	REF	6701-6850
	FL3014-102	FITTING ASSY, wing No. 4 RH (A0019) *(see fig. 3 for reqd)*	REF	6851-
		Attaching Parts		
-85	NAS1155-8	SCREW (80205)	4	
-86	NAS1155-8	SCREW (80205)	4	6701-6850
	NAS1155-9	SCREW (80205)	4	6851-
-87	NAS1155-9	SCREW (80205)	2	
-88	NAS1155-10	SCREW (80205)	2	6701-6850
	NAS1155-11	SCREW (80205)	2	6851-
-89	NAS1155-10	SCREW (80205)	2	
-90	NAS1155-11	SCREW (80205)	2	6701-6850
	NAS1155-12	SCREW (80205)	2	6851-
-91	NAS1155-11	SCREW (80205)	4	
-92	NAS1155-12	SCREW (80205)	4	6701-6850
	NAS1155-13	SCREW (80205)	4	6851-
-93	NAS1155-13	SCREW (80205)	4	
-94	NAS1155-14	SCREW (80205)	4	6701-6850
	NAS1155-15	SCREW (80205)	4	6851-
-95	NAS1155-15	SCREW (80205)	4	
-96	NAS1155-17	SCREW (80205)	4	6701-6850
	NAS1155-18	SCREW (80205)	4	6851-
-97	NAS1155-16	SCREW (80205)	4	
-98	NAS1155-17	SCREW (80205)	4	6701-6850
	NAS1155-19	SCREW (80205)	4	6851-
-98A	FL3025-101	WASHER (A0019)	4	6851-
-99	NAS623-4-4	SCREW (80205)	6	6701-6850
	NAS1104-4	SCREW (80205)	6	6851-
-100	AN960D516	WASHER (88044)	40	
-101	784070-1	CLIP ASSY, wing fillet	2	
	784070-2	CLIP ASSY, wing fillet	2	
-102	784071-1	CLIP ASSY, wing fillet	2	
	784071-2	CLIP ASSY, wing fillet	2	
-103	MS21042L5	NUT (96906)	48	
		*		
-104	783188-1	FITTING ASSY, wing No. 5 LH *(see fig. 3 for reqd)*	REF	6701-6850
	FL3015-101	FITTING ASSY, wing No. 5 LH (A0019) *(see fig. 3 for reqd)*	REF	6851-
	783199-2	FITTING ASSY, wing No. 5 RH *(see fig. 3 for reqd)*	REF	6701-6850

Figura e particolare	NDR	1 2 3 4 5 6 7	DENOMINAZIONE	Quant.	Codice applicab.
6-	FL3015-102		FITTING ASSY, wing No. 5 (A0019) *(see pag. 3 for reqd)*	REF	6851-
			Attaching Parts		
-105	NAS1155-8		SCREW (80205)	4	
-106	NAS1155-8		SCREW (80205)	4	6701-6850
	NAS1155-9		SCREW (80205)	4	6851-
-107	NAS1155-9		SCREW (80205)	2	
-108	NAS1155-10		SCREW (80205)	2	6701-6850
	NAS1155-11		SCREW (80205)	2	6851-
-109	NAS1155-10		SCREW (80205)	2	
-110	NAS1155-11		SCREW (80205)	2	6701-6850
	NAS1155-12		SCREW (80205)	2	6851-
-111	NAS1155-12		SCREW (80205)	2	
-112	NAS1155-13		SCREW (80205)	2	6701-6850
	NAS1155-14		SCREW (80205)	2	6851-
-113	NAS1153-13		SCREW (80205)	3	
-114	NAS1155-15		SCREW (80205)	3	6701-6850
	NAS1155-16		SCREW (80205)	3	6851-
-115	NAS1155-14		SCREW (80205)	4	
-116	NAS1155-16		SCREW (80205)	4	6701-6850
	NAS1155-17		SCREW (80205)	4	6851-
-117	NAS1155-18		SCREW (80205)	2	
-118	NAS1155-16		SCREW (80205)	1	
-119	NAS1155-18		SCREW (80205)	1	6701-6850
	NAS1155-20		SCREW (80205)	1	6851-
-119A	FL3025-101		WASHER (A0019)	3	6851
-120	NAS1155-20		SCREW (80205)	2	6701-6850
	NAS1155-23		SCREW (80205)	2	6851-
-121	761452-501		CLIP ASSY, wing aft beam to No. 5 fitting *(see fig. 3 for reqd)*	REF	
-122	NAS1204-7		BOLT (80205) *(see fig. 3 for reqd)*	REF	
-123	NAS1104-7		BOLT (80205)	5	
-124	NAS623-3-3		SCREW (80205)	3	
-125	NAS623-3-4		SCREW (80205)	3	6701-6850
	NAS623-3-5		SCREW (80205)	3	6851-
-126	AN960-416L		WASHER (88044)	5	
-127	AN960D10		WASHER (88044)	3	
-128	AN960D516		WASHER (88044)	22	
-129	784072-1		CLIP ASSY, wing fillet	2	
	784072-2		CLIP ASSY, wing fillet	2	
-130	784073-1		CLIP ASSY, wing fillet	1	
	784073-2		CLIP ASSY, wing fillet	1	
-131	784073-1	A.	CLIP ASSY, wing fillet	1	6701-6765
	784073-2	A.	CLIP ASSY, wing fillet	1	6701-6765
-132	852116-101	B.	CLIP ASSY, wing fillet	1	
	852116-102	B.	CLIP ASSY, wing fillet	1	
-133	MS21042L5		NUT (96906)	30	
-134	MS21042L3		NUT (96906)	3	
-135	764879		NAMEPLATE, trailing edge actuator shim instruction	1	

A - Removed per AA.1F-104-OT-708A
B - Reqd per AA.1F-104-OT-708A

Figura e particolare	NDR	1 2 3 4 5 6 7 DENOMINAZIONE	Quant.	Codice applicab.
		WING FILLETS		
7	760170-501	. FILLET INSTL, fuselage station 437 to 471 wing LH (NHA 849070-101)	1	
	760170-502	. FILLET INSTL, fuselage station 437 to 471 wing RH (NHA 849070-101)	1	
- 1	760170-45	. . FILLET ASSY, wing LH	1	
	760170-46	. . FILLET ASSY, wing RH	1	
		Attaching Parts		
- 2	NAS1203-2	. . SCREW (80205)	94	
- 3	NAS1203-3	. . SCREW (80205)	10	
		———————☼———————		
- 4	760170-29	. . . PANEL ASSY, wing fillet LH	1	
	760170-30	. . . PANEL ASSY, wing fillet RH	1	
- 5	760170-5L	A. . . PANEL ASSY, wing fillet LH	1	
	760170-5R	A. . . PANEL ASSY, wing fillet RH	1	
- 6	760170-31	. . . PANEL ASSY, wing fillet LH	1	
	760170-32	. . . PANEL ASSY, wing fillet RH	1	
- 7	760170-7L	. . . PANEL ASSY, wing fillet LH	1	
	760170-7R	. . . PANEL ASSY, wing fillet RH	1	
	762600L	. COVER INSTL, leading edge flap fitting LH (NHA 849070-101)	1	
	762600R	. COVER INSTL, leading edge flap fitting RH (NHA 849070-101)	1	
- 8	762600-3L	. . COVER ASSY, leading edge flap fitting LH	1	
	762600-3R	. . COVER ASSY, leading edge flap fitting RH	1	
		Attaching Parts		
- 9	AN502-10-10	. . SCREW (88044)	2	
-10	AN960D10	. . WASHER (88044)	2	
-11	LS881-7	. . WASHER, plain (36659)	2	
		———————☼———————		
-12	762600-5	. . . PIN, leading edge flap fitting	1	
-13	762600-4L	. . . COVER, leading edge flap fitting LH	1	
	762600-4R	. . . COVER, leading edge flap fitting RH	1	
-14	726253	. . . WASHER, spring retainer (make from AN960-8)	1	
-15	726254	. . . SPRING, leading edge flap fitting cover	1	
-16	762601	. . . PLATE, leading edge flap fitting cover	1	
-17	762602	. . . HALF HINGE, leading edge flap fitting cover	1	
-18	762603	. . . PLATE, spring retainer	1	
-19	F200-2	. . . JO-BOLT (98524)	1	
	762156-501	. FILLET INSTL, fuselage station 471 to 511 upper wing LH (NHA 849070-101)	1	
	762156-502	. FILLET INSTL, fuselage station 471 to 511 upper wing RH (NHA 849070-101)	1	
-20	762156-13	. . FILLET ASSY, upper wing LH	1	
	762156-14	. . FILLET ASSY, upper wing RH	1	
		Attaching Parts		
-21	NAS1203-2	. . SCREW (80205)	43	
		———————☼———————		
	762440-501	. FILLET INSTL, fuselage station 471 to 511 lower wing LH (NHA 849071-101)	1	
	762440-502	. FILLET INSTL, fuselage station 471 to 511 lower wing RH (NHA 849071-101)	1	
-22	762440-11	A. . FILLET ASSY, lower wing LH	1	
	762440-12	A. . FILLET ASSY, lower wing RH	1	
		Attaching Parts		
-23	NAS1203-2	. . SCREW (80205)	41	
		———————☼———————		
	786149-1	. FILLET INSTL, fuselage station 511 to 557 LH wing *(see fig. 31 for reqd)*	REF	
	786217-105	. FILLET INSTL, fuselage station 511 to 555 RH wing *(see fig. 31 for reqd)*	REF	
-24	786149-3	. . FILLET ASSY, wing LH	1	
	786217-107	. . FILLET ASSY, wing RH	1	
		Attaching Parts		
-25	NAS1203-3	. . SCREW (LH wing) (80205)	91	
	NAS1203-2	. . SCREW (RH wing) (80205)	86	
-26	NAS1203-3	. . SCREW (80205)	7	
		———————☼———————		
-27	786149-7	. . . PANEL ASSY, wing (upper LH)	1	
	762157-18	. . . PANEL ASSY, wing (upper RH)	1	

Wing Structure

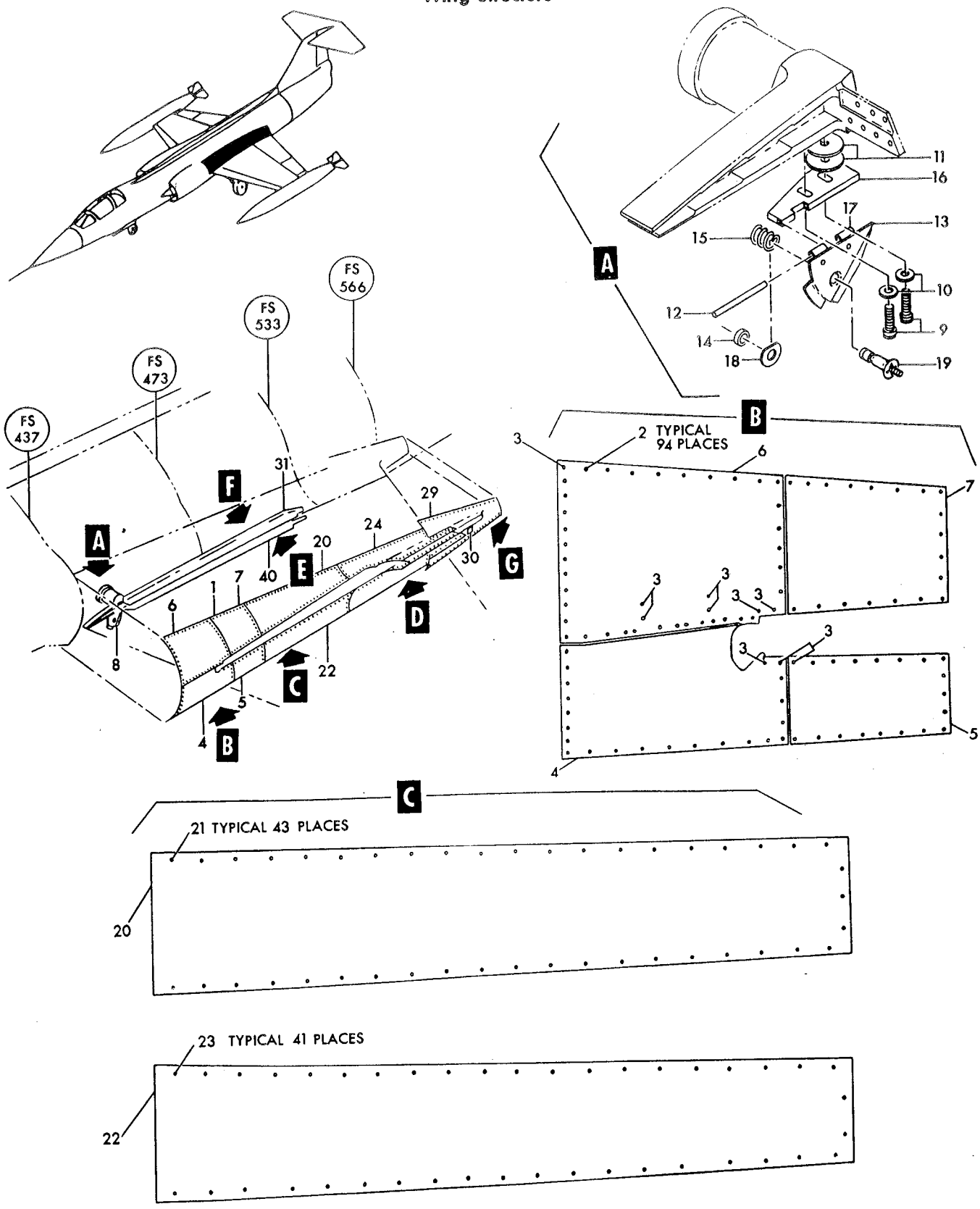

Figure 7— Wing Fillets (Sheet 1 of 2)

Wing Structure

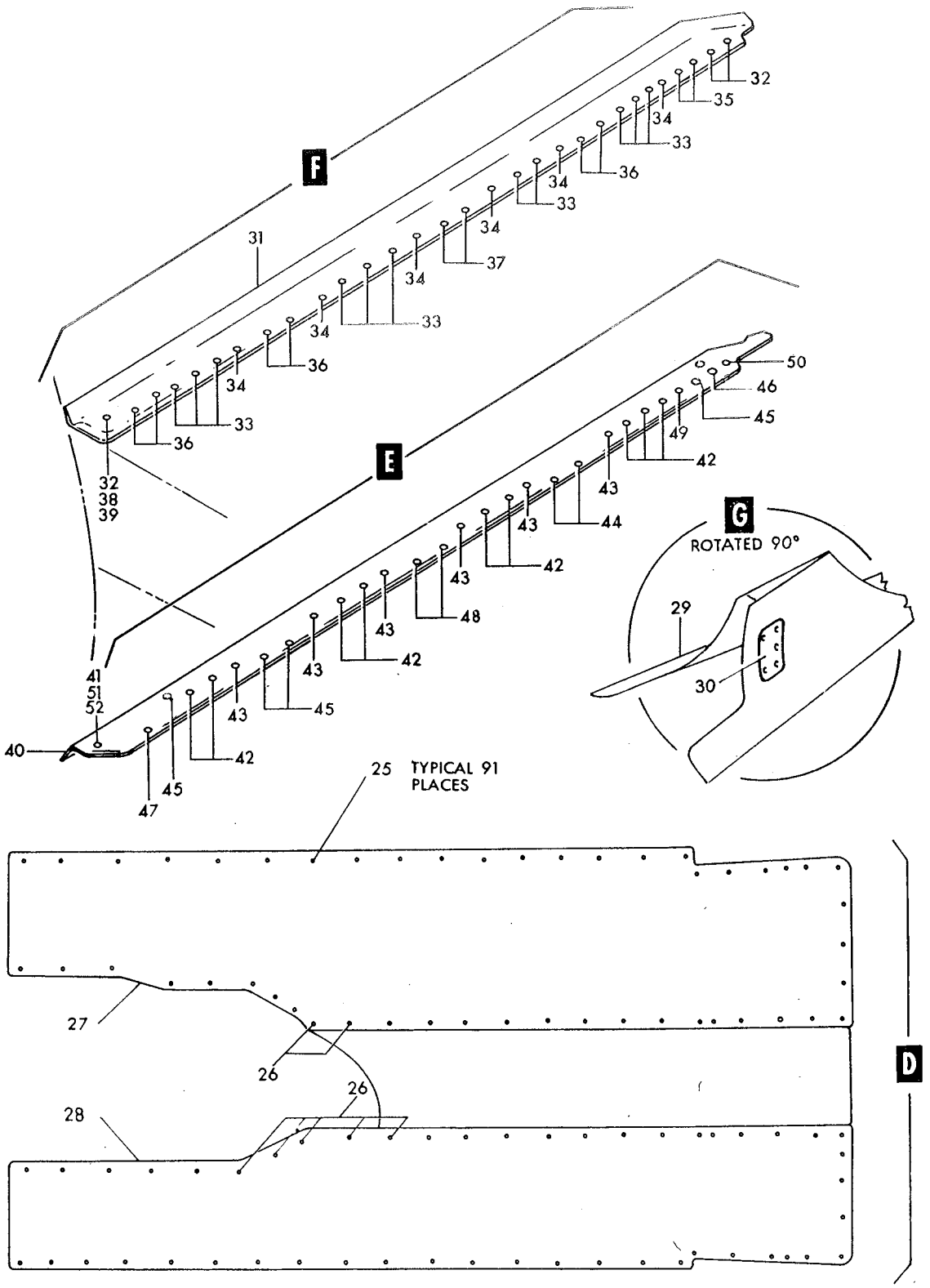

Figure 7— Wing Fillets (Sheet 2 of 2)

Figura e particolare	NDR		DENOMINAZIONE 1 2 3 4 5 6 7	Quant.	Codice applicab.
7-28	786149-5		PANEL ASSY, wing (lower LH)	1	
	786217-109		PANEL ASSY, wing (lower RH)	1	
	786148-1		FILLET INSTL, wing fixed LH *(see fig. 31 for reqd)*	REF	
	762725-502		FILLET INSTL, wing fixed RH *(see fig. 31 for reqd)*	REF	
-29	786148-3		FILLET ASSY, fixed wing LH	1	
	762725-3R		FILLET ASSY, fixed wing RH	1	
	786148-5		SHELL ASSY, fixed wing LH	1	
	762725-4R		SHELL ASSY, fixed wing RH	1	
-30	786148-17		COVER, fixed wing LH	1	
	762725-11R		COVER, fixed wing RH	1	
			Attaching Parts		
	NAS1203-2		SCREW (80205)	5	
			*		
	783472-1		FILLET ATTACHMENT INSTL, upper wing LH (NHA 849070-101)	1	
	783472-2		FILLET ATTACHMENT INSTL, upper wing RH (NHA 849070-101)	1	
-31	783472-3		ANGLE ASSY, upper wing fillet LH	1	
	783472-4		ANGLE ASSY, upper wing fillet RH	1	
			Attaching Parts		
-32	NAS1203-4		SCREW (80205)	3	
-33	NAS1203-5		SCREW (80205)	11	
-34	NAS1203-6		SCREW (80205)	6	
-35	NAS2805-17		SCREW (80205)	2	
-36	NAS2805-18		SCREW (80205)	6	
-37	NAS2806-19		SCREW (80205)	2	
-38	AN960D10		WASHER (88044)	1	
-39	MS21042L3		NUT (96906)	1	
			*		
	783473-1	B.	FILLET ATTACHMENT INSTL, lower wing LH (Modified and reidentified to 783473-101 per AA.1F-104-OT-708A) (NHA 849071-101)	1	6701-6765
	783473-101	C.	FILLET ATTACHMENT INSTL, lower wing LH (Supersedes 783473-1 per AA.1F-104-OT-708A) (NHA 849071-101)	1	6766-6850
	FL3023-101		FILLET ATTACHMENT INSTL, lower wing LH (A0019) (NHA 849071-101)	1	6851-
	783473-2	B.	FILLET ATTACHMENT INSTL, lower wing RH (Modified and reidentified to 783473-102 per AA.1F-104-OT-708A) (NHA 849071-101)	1	6701-6765
	783473-102	C.	FILLET ATTACHMENT INSTL, lower wing RH (Supersedes 783473-2 per AA.1F-104-OT-708A) (NHA 849071-101)	1	6766-6850
	FL3023-102		FILLET ATTACHMENT INSTL, lower wing RH (A0019) (NHA 849071-101)	1	6851-
-40	783473-3		ANGLE ASSY, lower wing fillet LH	1	6701-6765
	783473-103		ANGLE ASSY, lower wing fillet LH	1	6766-6850
	FL3023-103		ANGLE ASSY, lower wing fillet LH (A0019)	1	6851-
	783473-4		ANGLE ASSY, lower wing fillet RH	1	6701-6765
	783473-104		ANGLE ASSY, lower wing fillet RH	1	6766-6850
	FL3023-104		ANGLE ASSY, lower wing fillet RH (A0019)	1	6851-
			Attaching Parts		
-41	NAS1203-4		SCREW (80205)	1	
-42	NAS1203-4		SCREW (80205)	9	6701-6850
	NAS1203-3		SCREW (80205)	9	6851-
-43	NAS1203-6		SCREW (80205)	6	6701-6850
	NAS1203-3		SCREW (80205)	6	6851-
-44	NAS2805-18		SCREW (80205)	2	
-45	NAS2805-19		SCREW (80205)	4	
-46	NAS1155-19	B.	SCREW (80205)	1	6701-6765
	NAS2805-20	C.	SCREW (80205)	1	
-47	NAS2805-20		SCREW (80205)	1	
-48	NAS2806-22		SCREW (80205)	2	
-49	NAS1203-6		SCREW (80205)	1	6701-6850
	NAS1203-5		SCREW (80205)	1	6851-
-50	NAS1203-6		SCREW (80205)	1	6701-6850
	NAS1203-7		SCREW (80205)	1	6851-
-51	AN960D10		WASHER (88044)	1	
-52	MS21042L3		NUT (96906)	1	
			*		

A - Modified per AA.1F-104S-OT-111
B - Reqd per AA.1F-104-OT-708A
C - Removed per AA.1F-104-OT-708A

Figura e particolare	NDR	1 2 3 4 5 6 7	DENOMINAZIONE	Quant.	Codice applicab.
			WING ACCESS COVERS AND DOORS		
8	849223-101	.	SURFACE INSTL, fwd lower LH *(see fig. 3 for reqd)*	REF	6701-6790
	849223-105	.	SURFACE INSTL, fwd lower LH *(see fig. 3 for reqd)*	REF	6791-6850
	FL3003-101	.	SURFACE INSTL, fwd lower LH (A0019) *(see fig. 3 for reqd)*	REF	6851-
	849223-102	.	SURFACE INSTL, fwd lower RH *(see fig. 3 for reqd)*	REF	6701-6733
	849223-104	.	SURFACE INSTL, fwd lower RH *(see fig. 3 for reqd)*	REF	6734-6790
	849223-106	.	SURFACE INSTL, fwd lower RH *(see fig. 3 for reqd)*	REF	6791-6850
	FL3003-102	.	SURFACE INSTL, fwd lower RH (A0019) *(see fig. 3 for reqd)*	REF	6851-
- 1	849228-101	. .	SKIN, wing lower LH	1	6701-6850
	FL3005-101	. .	SKIN, wing lower LH (A0019)	1	6851-
	849228-102	. .	SKIN, wing lower RH	1	6701-6733
	849228-104	. .	SKIN, wing lower RH	1	6734-6850
	FL3005-102	. .	SKIN, wing lower RH (A0019)	1	6851-
- 2	761513-3	. .	DOOR, wing access	1	
			Attaching parts		
- 3	NAS1204-4	. .	SCREW (80205)	5	
	750656-8	. .	NUT, gang channel	1	
			——————✲——————		
- 4	761513-4L	. .	DOOR, wing access LH	1	
	761513-4R	. .	DOOR, wing access RH	1	
			Attaching Parts		
- 5	NAS1204-4	. .	SCREW (80205)	18	
- 6	NAS1204-5	. .	SCREW (80205)	8	
			——————✲——————		
- 7	761513-5L	. .	DOOR, wing access LH	1	
	761513-5R	. .	DOOR, wing access RH	1	
			Attaching Parts		
- 8	NAS1203-5	. .	SCREW (80205)	9	
- 9	NAS1203-4	. .	SCREW (80205)	4	
			——————✲——————		
-10	761514L	. .	DOOR ASSY, wing access LH	1	
	761514R	. .	DOOR ASSY, wing access RH	1	
			Attaching Parts		
-11	NAS1203-4	. .	SCREW (80205)	4	
			——————✲——————		
-12	761584	. .	DOOR ASSY, wing emergency access	1	
			Attaching Parts		
-13	NAS1203-5	. .	SCREW (80205)	2	
			——————✲——————		
-14	761585-11	. .	DOOR ASSY, wing access	1	
			Attaching Parts		
-15	NAS1203-3	A. .	SCREW (80205)	2	
			——————✲——————		
	762705	. .	RETAINER, wing tip pin	1	
	852158-101	B. .	WEAR STRIP, fwd pylon shear pin	1	
	852163-101	B. .	WEAR WASHER, pylon shear pin	1	
	849224-101	.	SURFACE INSTL, aft lower LH *(see fig. 3 for reqd)*	REF	6701-6765
	849224-105	.	SURFACE INSTL, aft lower LH *(see fig. 3 for reqd)*	REF	6766-6790
	849224-107	.	SURFACE INSTL, aft lower LH *(see fig. 3 for reqd)*	REF	6791-6850
	FL3004-101	.	SURFACE INSTL, aft lower LH (A0019) *(see fig. 3 for reqd)*	REF	6851-
	849224-102	.	SURFACE INSTL, aft lower RH *(see fig. 3 for reqd)*	REF	6701-6733
	849224-104	.	SURFACE INSTL, aft lower RH *(see fig. 3 for reqd)*	REF	6734-6765
	849224-106	.	SURFACE INSTL, aft lower RH *(see fig. 3 for reqd)*	REF	6766-6790
	849224-108	.	SURFACE INSTL, aft lower RH *(see fig. 3 for reqd)*	REF	6791-6850
	FL3004-101	.	SURFACE INSTL, aft lower RH (A0019) *(see fig. 3 for reqd)*	REF	6851-
-16	762078	. .	DOOR, wing jack pad	1	
			Attaching Parts		
-17	NAS1203-40	. .	SCREW (80205)	1	
			——————✲——————		
-18	773216-3	. .	COVER ASSY, aileron servo transmitter access (RH only)	1	6701-6733

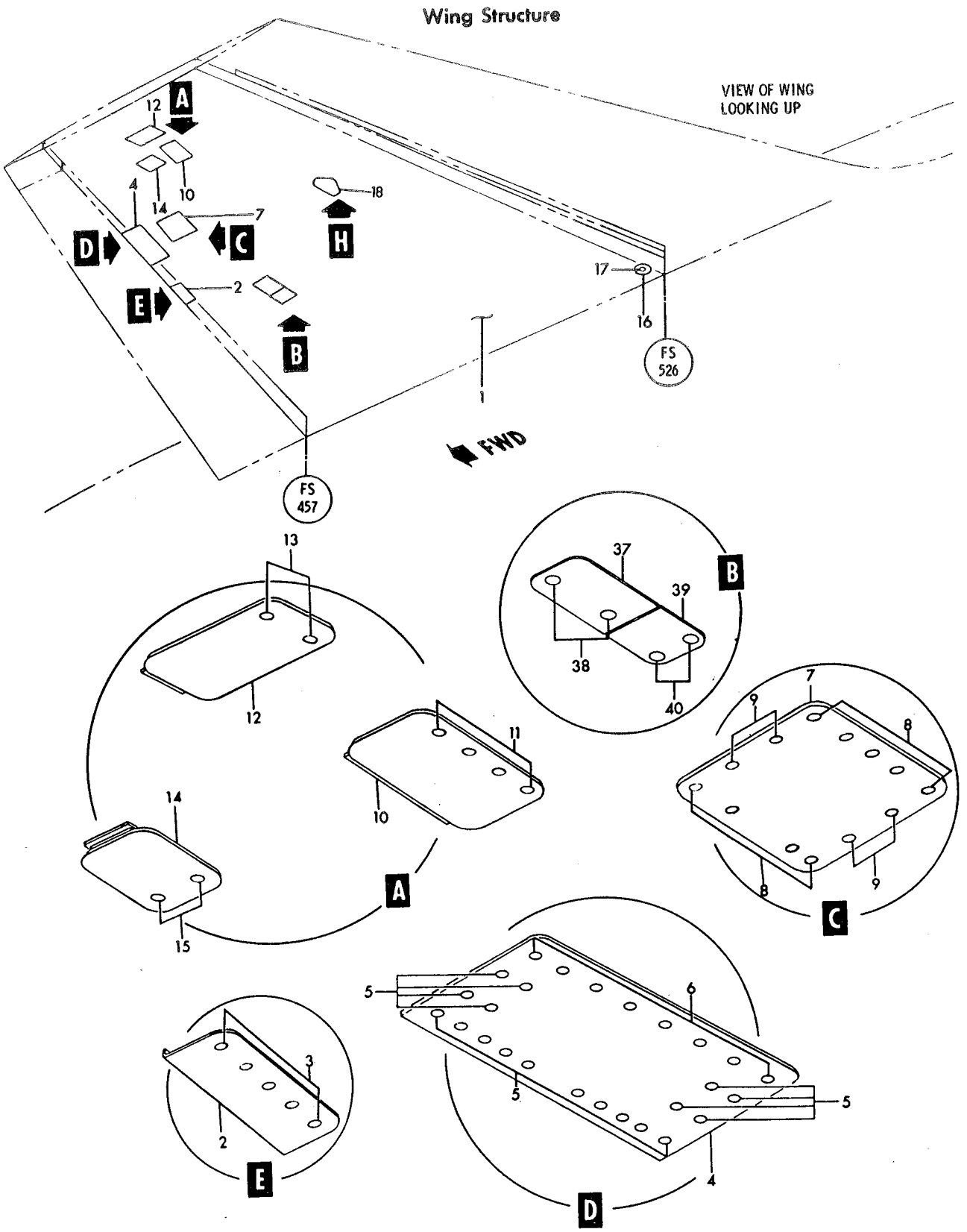

Figure 8— Wing Access Covers and Doors (Sheet 1 of 2)

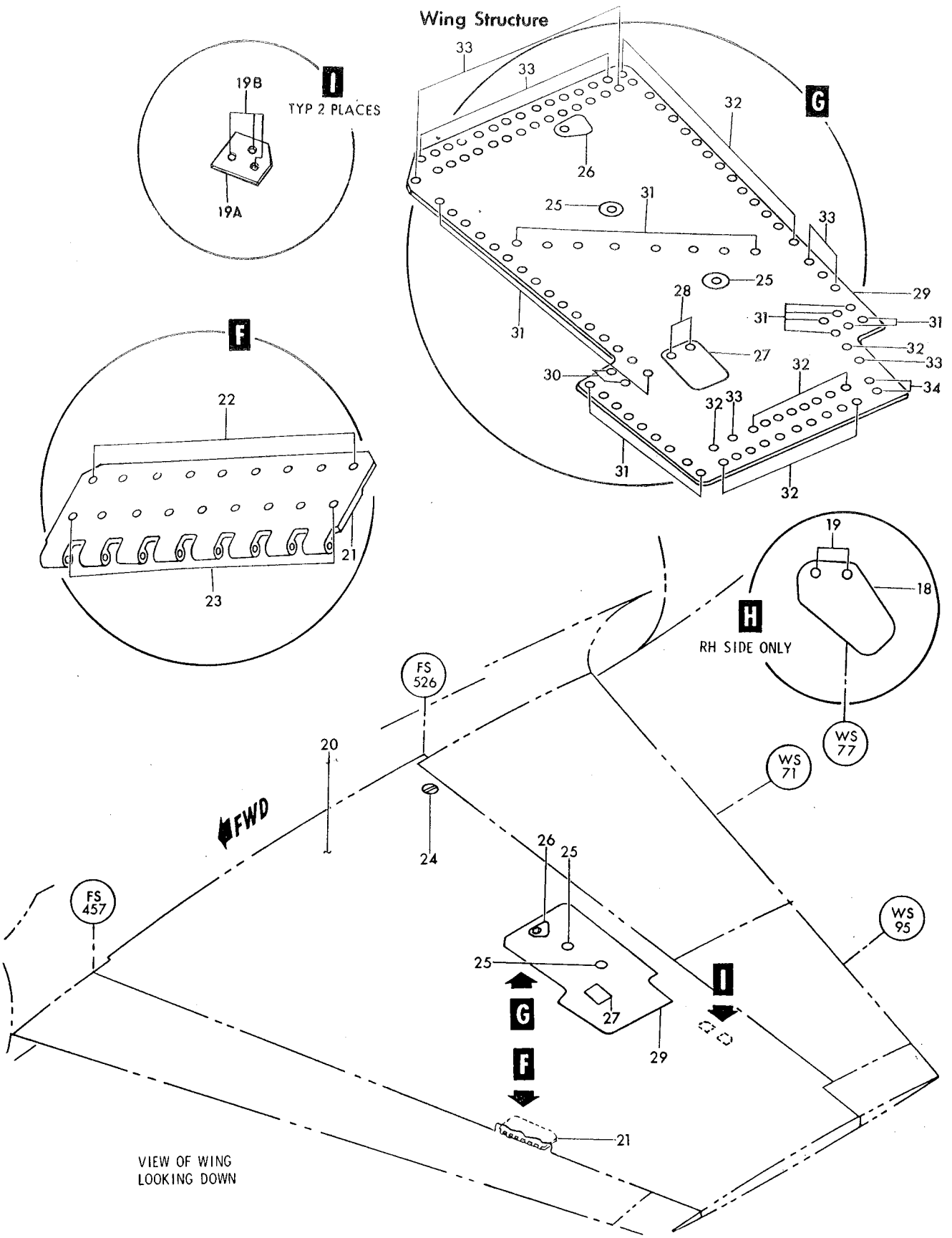

Figure 8—Wing Access Covers and Doors (Sheet 2 of 2)

Figura e particolare	NDR	1 2 3 4 5 6 7	DENOMINAZIONE	Quant.	Codice applicab.
			Attaching Parts		
8-19	NAS1203-4	. .	SCREW (80205)	2	6701-6733
			✲		
-19A	849292-101	. .	SHIM	2	
			Attaching Parts		
-19B	NAS1204-8	. .	SCREW (80205)	6	
			✲		
	776515-101	. .	MANIFOLD ASSY, wing pylon fuel transfer LH *(see fig. 10)*	1	
	776515-102	. .	MANIFOLD ASSY, wing pylon fuel transfer RH *(see fig. 10)*	1	
	852159-101	B. .	WEAR STRIP, aft pylon shear pin	1	
			Attaching Parts		
	NAS1203-3	B. .	SCREW (80205)	1	
	NAS1203-5	B. .	SCREW (80205)	1	
			✲		
	852163-101	B. .	WEAR WASHER, pylon shear pin	1	
	849225-101	.	SURFACE INSTL, fwd upper LH *(see fig. 3 for reqd)*	REF	
	849225-102	.	SURFACE INSTL, fwd upper RH *(see fig. 3 for reqd)*	REF	
-20	849227-101	. .	SKIN, wing upper LH	1	
	849227-102	. .	SKIN, wing upper RH	1	
-21	761776L	. .	HINGE, leading edge flap latch LH	1	
	761776R	. .	HINGE, leading edge flap latch RH	1	
			Attaching Parts		
-22	NAS1204-4	. .	SCREW (80205)	9	
-23	NAS1204-7	. .	SCREW (80205)	9	
	AN960D416	. .	WASHER (88044)	18	
	MS21042L4	. .	NUT (96906)	18	
			✲		
	849226-101	.	SURFACE INSTL, aft upper LH *(see fig. 3 for reqd)*	REF	
	849226-102	.	SURFACE INSTL, aft upper RH *(see fig. 3 for reqd)*	REF	
-24	762077	. .	PLUG ASSY, wing jack pad	1	
-25	762079	. .	COVER, bleed plug access	2	
			Attaching Parts		
	NAS1203-4	. .	SCREW (80205)	1	
			✲		
-26	786627-1	. .	COVER ASSY, upper surface wing panel	1	
			Attaching Parts		
	NAS1203-5	. .	SCREW (80205)	1	
			✲		
-27	761585-8	. .	DOOR ASSY, wing jack	1	
			Attaching Parts		
-28	NAS1203-4	. .	SCREW (80205)	2	
			✲		
-29	786426-1	. .	PANEL ASSY, upper surface wing access LH	1	
	786426-2	. .	PANEL ASSY, upper surface wing access RH	1	
			Attaching Parts		
-30	NAS1204-4	. .	SCREW (80205)	2	
-31	NAS1204-5	. .	SCREW (80205)	39	
-32	NAS1204-6	. .	SCREW (80205)	35	
-33	NAS1204-7	. .	SCREW (80205)	34	
-34	NAS1204-9	. .	SCREW (80205)	2	
			✲		
-37	785772-1	.	COVER, electrical disconnect wing station 74 LH *(see fig. 9 for reqd)*	REF	6701-6850
	785772-2	.	COVER, electrical disconnect wing station 74 RH *(see fig. 9 for reqd)*	REF	6701-6850
			Attaching Parts		
-38	NAS1203-6	.	SCREW (80205)	2	6701-6850
			✲		
-39	785832-1	.	DOOR ASSY, triaxial disconnect access *(see fig. 9 for reqd)*	REF	6701-6850
			Attaching Parts		
-40	NAS1203-2	.	SCREW (80205)	2	6701-6850
			✲		

A - Reqd per AA.1F-104-OT-692
B - Reqd per AA.1F-104-OT-765

Figura e particolare	NDR	1 2 3 4 5 6 7 DENOMINAZIONE	Quant.	Codice applicab.
		LEADING EDGE FLAP LATCH		
9	849222-101	. LATCH INSTL, leading edge flap LH *(see fig. 3 for reqd)*	REF	6701-6850
	FL3028-101	. LATCH INSTL, leading edge flap LH (A0019) *(see fig. 3 for reqd)*	REF	6851-
	849222-102	. LATCH INSTL, leading edge flap RH *(see fig. 3 for reqd)*	REF	6701-6850
	FL3028-102	. LATCH INSTL, leading edge flap RH (A0019) *(see fig. 3 for reqd)*	REF	6851-
- 1	761661	. . PIN, leading edge flap lock	1	
- 2	NAS561P2-6	. . ROLL PIN (80205)	2	
- 3	MS20392-2C13	. . PIN (96906)	1	
	AN960-10L	. . WASHER (88044)	1	
	MS24665-134	. . COTTER PIN (96906)	4	
- 4	761854	. . HOOK, leading edge flap latch	1	
- 5	AN23-12	. . BOLT, clevis (88044)	2	
- 6	AN310-3	. . NUT (88044)	3	
- 7	AN23-19	. . BOLT, clevis (88044)	1	
- 8	AN960-10	. . WASHER (88044)	1	
- 9	NAS1103-4	. . BOLT (80205)	2	
-10	MS21042L3	. . NUT (96906)	2	
-11	761864	. . ANGLE, leading edge flap limit switch	1	
-12	761856	. . BRACKET ASSY, leading edge flap limit switch	1	
	761856-3	. . . BRACKET	1	
-13	NAS428-3-6	. . . BOLT (80205)	1	
-14	MS21042L3	. . . NUT (96906)	1	
-15	761855	. . LINK ASSY, leading edge flap latch	1	
-16	NAS561P4-10	. . . ROLL PIN (80205)	1	
-17	761859	. . . RETAINER, flap link spring	1	
-18	726177-3	. . . SPRING, leading edge flap latch link	1	
-19	MS20002-7	. . . WASHER (96906)	1	
-20	761857	. . . LINK, leading edge flap latch	1	
-21	761860L	. . BELLCRANK, leading edge flap latch LH	1	
	761860R	. . BELLCRANK, leading edge flap latch RH	1	
-22	761865L	. . BRACKET, leading edge flap latch link LH	1	
	761865R	. . BRACKET, leading edge flap latch link RH	1	
-23	849273-102	. . BRACKET, leading edge flap latch outboard switch LH	1	
	849273-101	. . BRACKET, leading edge flap latch outboard switch RH	1	
		Attaching Parts		
	NAS1203-5	. . SCREW (80205)	2	
		*		
-24	761867L	. . BRACKET, leading edge flap latch inboard switch LH	1	
	761867R	. . BRACKET, leading edge flap latch inboard switch RH	1	
		Attaching Parts		
	NAS1103-4	. . BOLT (80205)	2	
		*		
-25	AD5721R7	. . ADAPTER, switch actuator (91929) (Lockheed spec dwg 619167)	1	
-26	MS25011-1	. . SWITCH, (S59) (limit) (96906) (leading edge flap latch) *(see fig. 17)*	2	
		Attaching Parts		
	AN515-6R16	. . SCREW (inboard switch) (88044)	2	
	AN500A6-16	. . SCREW (outboard switch) (88044)	2	
	MS21042L06	. . NUT (96906)	2	
		*		
	761863-501	. . CABLE ASSY, leading edge flap latch	1	
-27	761863-5	. . . CABLE ASSY	1	
-28	726176-3	. . . . TERMINAL, latch cable	1	
-29	MS20664C3	. . . . TERMINAL (96906)	1	
-30	MS20668-3	. . . . TERMINAL (96906)	1	
-31	761863-7	. . . . CABLE	1	
-32	726175-3	. . . EYE, latch cable terminal	1	
	785772-1	. . COVER, electrical disconnect wing station 74 LH *(see fig. 8)*	1	6701-6850
	785772-2	. . COVER, electrical disconnect wing station 74 RH *(see fig. 8)*	1	6701-6850
	785832-1	. . DOOR ASSY, triaxial disconnect access *(see fig. 8)*	1	6701-6850
	785742-5	. ACTUATOR INSTL, leading edge flap LH *(see fig. 2 for reqd)*	REF	6701-6740

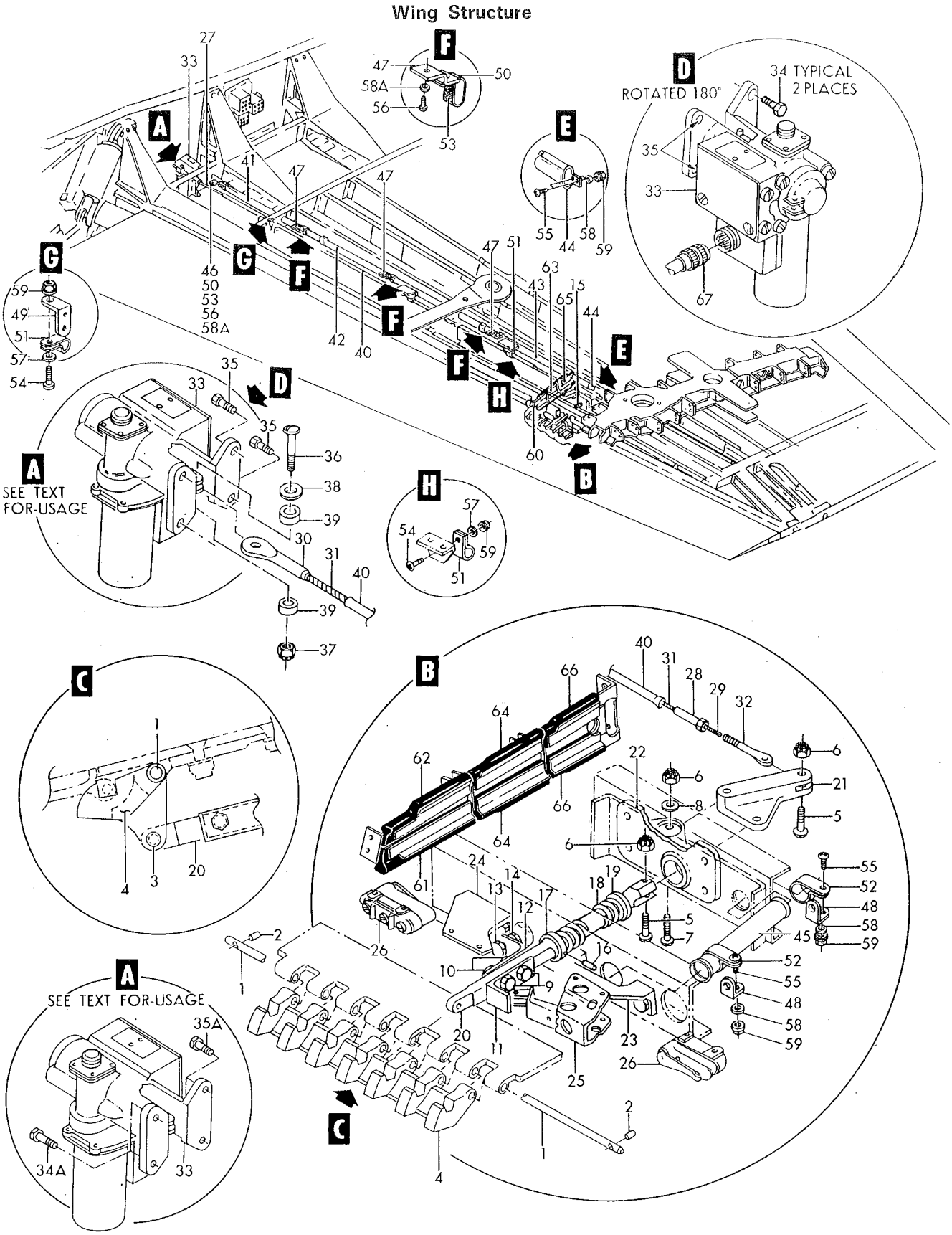

Figure 9-Leading Edge Flap Latch

Figura e particolare	NDR	1	2	3	4	5	6	7	DENOMINAZIONE	Quant.	Codice applicab.
9	785742-101								ACTUATOR INSTL, leading edge flap LH *(see fig. 2 for reqd)*	REF	6741-
	785742-6								ACTUATOR INSTL, leading edge flap RH *(see fig. 2 for reqd)*	REF	6701-6740
	785742-102								ACTUATOR INSTL, leading edge flap RH *(see fig. 2 for reqd)*	REF	6741-
-33	39608-2	A.							ACTUATOR, (B16) electro-mechanical (LH leading edge flap lock) (A0076) (70210) (Lockheed spec dwg 669305-7) (see T.O. 8D1-7-25-34)	1	
	39610-2	A.							ACTUATOR, (B16) electro-mechanical (RH leading edge flap lock) (A0076) (70210) (Lockheed spec dwg 669305-8) (see T.O. 8D1-7-25-34)	1	
									Attaching Parts		
-34	NAS1103-6								SCREW (80205)	2	6701-6740
-34A	NAS1103-8								SCREW (80205) (only LH actuator)	2	6741-
	NAS1103-9								SCREW (80205) (only RH actuator)	2	6741-
-35	NAS1103-5								SCREW (80205)	2	6701-6740
-35A	NAS1103-7								SCREW (80205) (only LH actuator)	2	6741-
	NAS1103-8								SCREW (80205) (only RH actuator)	2	6741-
-36	AN23-20								BOLT (88044)	1	
-37	AN310-3								NUT (88044)	1	
-38	AN960-10L								WASHER (88044)	1	
-39	NAS502-3								BEARING (80205)	2	
	849222-103								TUBE INSTL, leading edge flap LH *(see fig. 3 for reqd)*	REF	6701-6850
	FL3028-103								TUBE INSTL, leading edge flap LH (A0019) *(see fig. 3 for reqd)*	REF	6851-
	849222-104								TUBE INSTL, leading edge flap RH *(see fig. 3 for reqd)*	REF	6701-6850
	FL3028-104								TUBE INSTL, leading edge flap RH (A0019) *(see fig. 3 for reqd)*	REF	6851-
-40	761853-11								TUBE	1	
-41	850992-101								TUBE	1	6701-6850
	FL3029-101								TUBE	1	6851-
-42	850993-101								TUBE	1	6701-6850
	FL3030-101								TUBE	1	6851-
-43	850994-101								TUBE	1	
-44	850995-101								TUBE	1	
-45	849222-105								TUBE, flare both ends	1	
									Attaching Parts		
-46	849281-101								BRACKET	1	
-47	849281-103								BRACKET	3	
-48	AN743B12								BRACKET (88044)	2	
-49	AN743B13								BRACKET (88044)	1	
-50	849282-101								CLAMP	4	
-51	AN742D10								CLAMP (88044)	2	
-52	AN742D8								CLAMP (88044)	2	
-53	849222-107								TAPE	4	
-54	NAS623-3-1								SCREW (80205)	2	
-55	NAS623-3-2								SCREW (80205)	4	
-56	NAS623-4-2								SCREW (80205)	4	
-57	AN960-10								WASHER (88044)	2	
-58	AN960-10L								WASHER (88044)	4	
-58A	AN960-416L								WASHER (88044)	4	
-59	MS21042L3								NUT (96906)	6	
	849231-101								RIB INSTL, inboard leading edge latch enclosing *(see fig. 3 for reqd)*	REF	
	849231-102								RIB INSTL, inboard leading edge latch enclosing *(see fig. 3 for redq)*	REF	
-60	763818-3L								FORMER ASSY, LH	1	
	763818-3R								FORMER ASSY, RH	1	
-61	763818-16								SEAL	1	
-62	763818-17								SEAL	1	
-63	763818-4								FORMER ASSY	1	
-64	763818-18								SEAL	2	
-65	763818-5L								FORMER ASSY, LH	1	
	763818-5R								FORMER ASSY, RH	1	
-66	763818-19								SEAL	2	
	849780-101								HARNESS ASSY, P142 plug to LH wing fillet *(see fig. 194)*	REF	
-67	MS25183-14S5S								CONNECTOR, (P18) plug (electro-mechanical LH leading edge flap lock) (96906)	1	

A - Modified per AA.1F-104-OT-805

Figura e particolare	NDR	DENOMINAZIONE	Quant.	Codice applicab.
		WING FUEL PIPING AND EQUIPMENT		
10	851028-101	PLUMBING INSTL, wing fuel LH *(see fig. 3 for reqd)*	REF	
	851028-102	PLUMBING INSTL, wing fuel RH *(see fig. 3 for reqd)*	REF	
- 1	AN735D24	CLAMP, bonding (88044)	1	
- 2	AN735D10	CLAMP, bonding (88044)	2	
- 3	AN735D12	CLAMP, bonding (88044)	1	
- 4	AN735D20	CLAMP, bonding (88044)	1	
- 5	AN735D16	CLAMP, bonding (88044)	1	
- 5A	MS25083-2BB3	JUMPER (96906)	1	
- 5B	MS25083-2BB6	JUMPER (96906)	2	
- 5C	MS25083-2BB9	JUMPER (96966)	2	
- 5D	MS25083-2BB8	JUMPER (96906)	1	
		Attaching Parts		
- 5E	AN520-10R8	SCREW (88044)	1	
- 6	NAS603-8	BOLT (80205)	8	
- 6A	AN960D10	WASHER (88044)	3	
- 6B	MS21042L3	NUT (96906)	9	
- 7	851840-101	TUBE ASSY, wing tip air	1	
- 7A	851839-101	TUBE ASSY, wing tip air LH	1	
	851839-102	TUBE ASSY, wing tip air RH	1	
- 7B	851841-101	COUPLING, wing tip air	1	
		Attaching Parts		
- 7C	NAS1203-3	SCREW (80205)	3	
- 8	762406-101	TUBE ASSY, wing tip fuel LH *(see fig. 111)*	1	
	762406-102	TUBE ASSY, wing tip fuel RH *(see fig. 111)*	1	
- 9	770309-1	TUBE ASSY, wing pylon fuel LH *(see fig. 111)*	1	
	770309-2	TUBE ASSY, wing pylon fuel RH *(sse fig. 111)*	1	
-10	762405-101	TUBE ASSY, wing tip vent LH *(see fig. 111)*	1	
	762405-102	TUBE ASSY, wing tip vent RH *(see fig. 111)*	1	
-11	762404	TUBE ASSY, wing pylon air	1	
-12	MS29513-16	PACKING (96906)	12	
-13	MS29513-22	PACKING (96906)	6	
-14	MS29513-24	PACKING (96906)	2	
-15	MS29513-26	PACKING (96906)	2	
-16	MS29513-128	PACKING (96906)	2	
-17	776515-101	MANIFOLD ASSY, wing pylon fuel transfer LH *(see fig. 8 for reqd)*	REF	
	776515-102	MANIFOLD ASSY, wing pylon fuel transfer RH *(see fig. 8 for reqd)*	REF	
		Attaching Parts		
-18	NAS1204-5	SCREW (80205)	1	
-19	NAS1204-8	SCREW (80205)	1	
-20	NAS1395C4L	INSERT (80205)	2	
-21	760878	FITTING, wing tip vent *(see fig. 18 for reqd)*	REF	
-22	760879	FITTING, wing tip fuel *(see fig. 18 for reqd)*	REF	
-23	760880	FITTING, wing tip air *(see fig. 18 for reqd)*	REF	
-24	762279-101	BRACKET ASSY, wing tip plumbing LH *(see fig. 18 for reqd)*	REF	
	762279-102	BRACKET ASSY, wing tip plumbing RH *(see fig. 18 for reqd)*	REF	
-25	762279-4L	BRACKET ASSY, wing tip plumbing LH *(see fig. 18 for reqd)*	REF	
	762279-4R	BRACKET ASSY, wing tip plumbing RH *(see fig. 18 for reqd)*	REF	
	764561-4L	BRACKET INSTL, fuel tube inboard support LH (NHA 849140-101)	1	
	764561-4R	BRACKET INSTL, fuel tube inboard support RH (NHA 849140-101)	1	
	764561-11	BRACKET ASSY, fuel tube inboard support LH	1	
	764561-12	BRACKET ASSY, fuel tube inboard support RH	1	
		Attaching Parts		
	AN4-6A	BOLT (88044)	4	
	AN960D416	WASHER (88044)	4	
-26	787435-1	BRACKET, fuel tube inboard support LH	1	

Wing Fuel

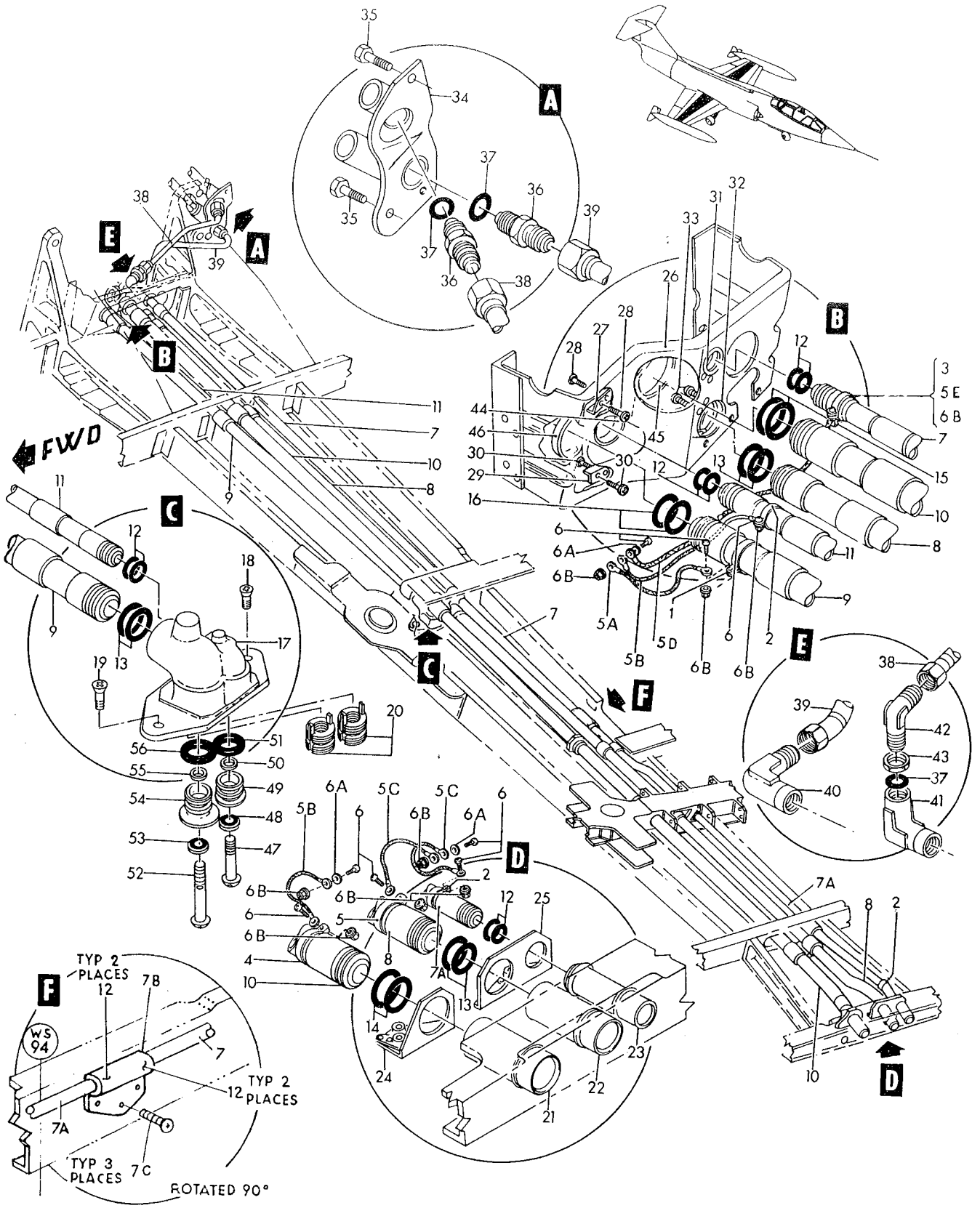

Figure 10–Wing Fuel Piping and Equipment

Figura e particolare	NDR	1 2 3 4 5 6 7 DENOMINAZIONE	Quant.	Codice applicab.
10	787435-2	BRACKET, fuel tube inboard support RH	1	
-27	776643-1	SUPPORT ASSY, fuel tube LH	1	
	776643-2	SUPPORT ASSY, fuel tube RH	1	
		Attaching Parts		
-28	AN515-8R8	SCREW (88044)	2	
	AN960D8	WASHER (88044)	2	
	MS21042L08	NUT (96906)	2	
-29	770491-1	CLIP, air tube support LH	1	
	770491-2	CLIP, air tube support RH	1	
		Attaching Parts		
-30	AN515-8R8	SCREW (88044)	2	
	AN960D8	WASHER (88044)	2	
	MS21042L08	NUT (96906)	2	
-31	401-14R	CLAMP LH (00502)	1	
	401-14	CLAMP RH (00502)	1	
		Attaching Parts		
	AN515-8R8	SCREW (88044)	2	
	AN960D8	WASHER (88044)	2	
	MS21042L08	NUT (96906)	2	
-32	401-20R	CLAMP LH (00502)	1	
	401-20	CLAMP RH (00502)	1	
		Attaching Parts		
-33	AN515-8R8	SCREW (88044)	2	
	AN960D8	WASHER (88044)	2	
	MS21042L08	NUT (96906)	2	
	770846-3	FITTING INSTL, mid fuselage fuel LH *(see fig. 31 for reqd)*	REF	
	770846-5	FITTING INSTL, mid fuselage fuel RH *(see fig. 31 for reqd)*	REF	
-34	762886L	FITTING, mating plane air lines *(see fig. 113)*	1	
	762886R	FITTING, mating plane air lines *(see fig. 113)*	1	
		Attaching Parts		
-35	AN4-5A	BOLT (88044)	2	
	AN960D416	WASHER (88044)	2	
	784393-5	PLUMBING INSTL, mid fuselage fuel LH (NHA 849070-101)	1	
	784393-7	PLUMBING INSTL, mid fuselage fuel RH (NHA 849070-101)	2	
-36	AN815-10D	UNION, (88044)	2	
-37	MS29512-10	GASKET (96906)	3	
-38	775107-25	TUBE ASSY, air pressure (LH tip tank)	1	
	775107-27	TUBE ASSY, air pressure (RH tip tank)	1	
-39	785201-55	TUBE ASSY, air pressure (LH pylon tank)	1	
	785201-53	TUBE ASSY, air pressure (RH pylon tank)	1	
-40	726326-3	FITTING, air inboard	1	
-41	726327-3	FITTING, air inboard	1	
-42	AN837-10D	ELBOW (88044)	1	
-43	AN924-10D	NUT (88044)	1	
-44	TA4C74D14T	CLAMP, loop type (84971)	1	
		Attaching Parts		
	AN520-10R8	SCREW (88044)	1	
	AN960D10	WASHER (88044)	1	
	MS21042L3	NUT (80205)	1	
-45	TA4C74D24T	CLAMP, loop type (84971)	1	
		Attaching Parts		
	AN520-10R8	SCREW (88044)	1	
	AN960-10L	WASHER (88044)	1	

Figura e particolare	NDR	DENOMINAZIONE	Quant.	Codice applicab.
10-46	TA4C74D29T	CLAMP, loop type (84971)	1	
		Attaching Parts		
	AN520-10R14	SCREW (88044)	1	
	AN960D10	WASHER (88044)	1	
	MS21042L3	NUT (80205)	1	
	786424-3	PLUG AND COVER AND ANGLE INSTL, pylon support *(see fig. 3 for reqd)*	REF	
	786424-4	PLUG AND COVER AND ANGLE INSTL, pylon support *(see fig. 3 for reqd)*	REF	
	776517-1	PLUG ASSY, air disconnect	1	
-47	776517-3	BOLT, air disconnect	1	
-48	2230-4	WASHER, sealing (98159)	1	
-49	776519-1	FITTING, fuel wing air disconnect plug	1	
-50	AN960-416	WASHER (88044)	1	
-51	MS29513-210	PACKING (96906)	1	
	776518-1	PLUG ASSY, fuel disconnect	1	
-52	776518-3	BOLT, fuel disconnect	1	
-53	2230-4	WASHER, sealing (98159)	1	
-54	776520-1	FITTING, fuel disconnect plug	1	
-55	AN960-416	WASHER (88044)	1	
-56	MS29513-214	PACKING (96906)	1	

Figura e particolare	NDR	DENOMINAZIONE 1 2 3 4 5 6 7	Quant.	Codice applicab.
		AILERON SERVO AND PIPING		
11	760460L	PIPING INSTL, aileron hydraulic power control LH *(see fig. 3 for reqd)*	REF	
	760460R	PIPING INSTL, aileron hydraulic power control RH *(see fig. 3 for reqd)*	REF	
-1	763382-3	TUBE ASSY, system No. 2 hydraulic pressure LH *(see fig. 122)*	1	
	763382-6	TUBE ASSY, system No. 2 hydraulic pressure RH *(see fig. 123)*	1	
-2	763382-15	TUBE ASSY, system No. 2 hydraulic return LH *(see fig. 122)*	1	
	763382-17	TUBE ASSY, system No. 1 hydraulic return LH *(see fig. 122)*	1	
	763382-17	TUBE ASSY, system No. 1 hydraulic return RH *(see fig. 123)*	1	
-3	763382-13	TUBE ASSY, system No. 2 hydraulic return LH *(see fig. 122)*	1	
	763382-11	TUBE ASSY, system No. 2 hydraulic return RH *(see fig. 123)*	1	
-4	763382-9	TUBE ASSY, system No. 1 hydraulic pressure LH *(see and 122)*	1	
	763382-8	TUBE ASSY, system No. 1 hydraulic pressure RH *(see and 123)*	1	
-5	760462	SPACER, aileron hydraulic tube support	1	
-6	792535-1	SEAL, wing sta 72 rib hole	2	
-7	792536-1	RETAINER, wing sta 12 rib hole seal	2	
		Attaching Parts		
-8	AN520-10R12	SCREW (88044)	2	
		✲		
	783039-103	SERVO INSTL, aileron power control LH *(see fig. 2 for reqd)*	REF	
	783039-104	SERVO INSTL, aileron power control RH *(see fig. 2 for reqd)*	REF	
-9	774428-1	TUBE ASSY, LH manifold to aileron cylinder	1	
	774427-1	TUBE ASSY, RH manifold to aileron cylinder	1	
-10	774425-1	NAMEPLATE, LH manifold tube to aileron cylinder	1	
	774426-3	NAMEPLATE, RH manifold tube to aileron cylinder	1	
-11	762047	TUBE ASSY, LH aileron down manifold to outboard cylinder	1	
	762043	TUBE ASSY, RH aileron down manifold to outboard cylinder	1	
-12	762048	TUBE ASSY, LH aileron down manifold to inboard cylinder	1	
	762044	TUBE ASSY, RH aileron down manifold to inboard cylinder	1	
-13	762049	TUBE ASSY, LH aileron up manifold to outboard cylinder	1	
	762045	TUBE ASSY, RH aileron up manifold to outboard cylinder	1	
-14	762050-7	TUBE ASSY, LH aileron up manifold to inboard cylinder	1	
	766194-5	TUBE ASSY, RH aileron up manifold to inboard cylinder	1	
-15	LS4565-6	RING, teflon back-up packing (36659)	8	
-16	MS28775-011	PACKING (96906)	8	
-17	762134L	RETAINER, aileron cylinder block tube assy	1	
	762134R	RETAINER, aileron cylinder block tube assy	1	
		Attaching Parts		
-18	MS20004-8	BOLT (96906)	1	
-19	MS20002C4	WASHER (96906)	1	
		✲		
	MS24665-134	COTTER PIN (96906)	1	
-20	AN320-4	NUT (88044)	1	
-21	AN960-416L	WASHER (88044)	1	
-22	NAS1104-8D	BOLT (80205)	1	
-23	776843-1	ROD ASSY, aileron push	1	
-24	776843-3	WELD ASSY, aileron push rod	1	
-25	RE4M6	BEARING, male anti-friction rod end (21335)	1	
-26	AN316-6R	NUT (88044)	1	
	MS24665-134	COTTER PIN (96906)	1	
-27	AN320-5	NUT (88044)	1	
-28	AN960D516	WASHER (88044)	1	
-28A	852000-101	WASHER	2	
-29	762066-3	BOLT, servo close tolerance	1	
-30	51550-7	JACKSCREW, mechanical LH (96212) (Lockheed spec dwg 669312-9) (see T.O. 8D1-8-116-4) *(see fig. 5)*	1	
	51550-8	JACKSCREW, mechanical RH (96212) (Lockheed spec dwg 669312-10) (see T.O. 8D1-8-116-4) *(see fig. 5)*	1	
-31	793218-105	SERVO ASSY, (B22) aileron mechanical hydraulic LH (see T.O. 9H2-4-126-4)	1	
	793218-106	SERVO ASSY, (B22) aileron mechanical hydraulic RH (see T.O. 9H2-4-126-4)	1	

Wing Hydraulics

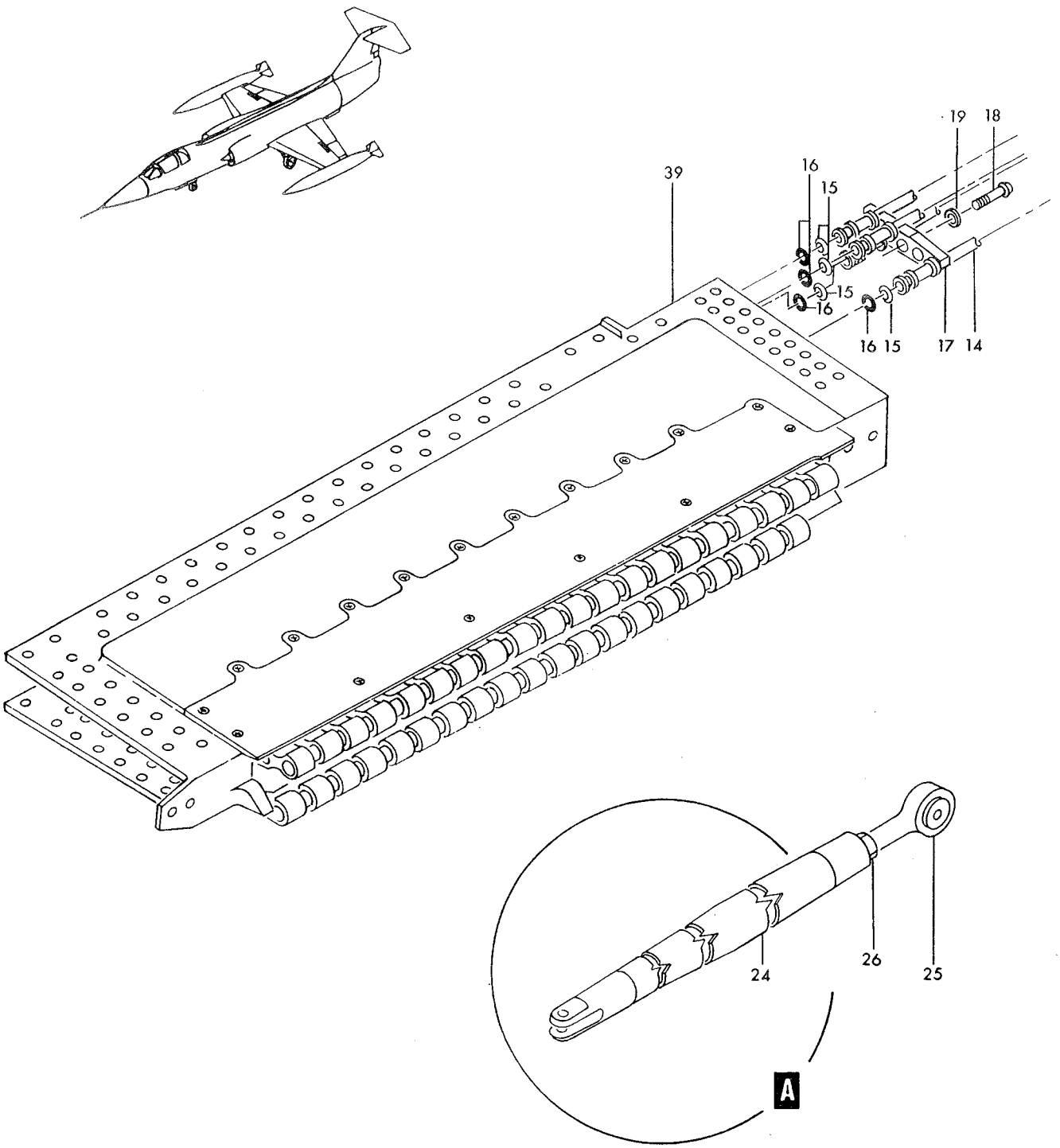

Figure 11— Aileron Servo and Piping (Sheet 1 of 2)

Wing Hydraulics

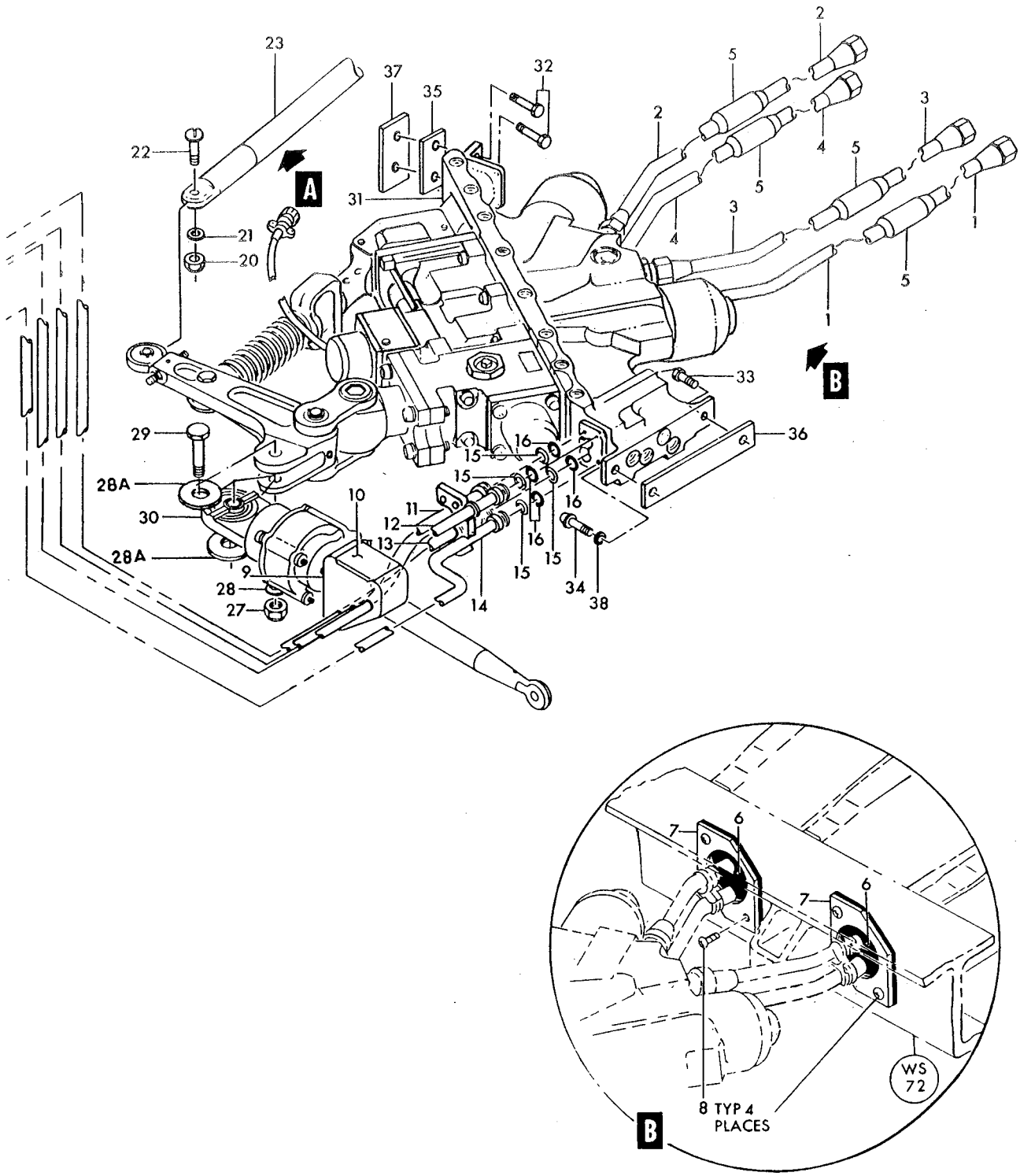

Figure 11— Aileron Servo and Piping (Sheet 2 of 2)

Figura e particolare	NDR	1 2 3 4 5 6 7 DENOMINAZIONE	Quant.	Codice applicab.
		Attaching Parts		
11-32	NAS1104-8	BOLT (80205)	2	
-33	NAS1104-6	BOLT (80205)	1	
-34	MS20004-6	BOLT (96906)	1	
-35	761852	SPACER, aileron hydraulic manifold servo	1	
-36	761841	PLATE, aileron hydraulic manifold servo	1	
-37	761840	SHIM, aileron hydraulic manifold servo	AR	
-38	MS20002C4	WASHER (96906)	1	
		*		
		Maintenance Components Only		
	LS4564-4	RING, backup (36659) (NHA 783218-103)	2	
	MS28775-226	PACKING (96906) (NHA 783218-3)	2	
	MS28775-226	PACKING (96906) (NHA 783218-103)	2	
	AC930E11	FILTER ELEMENT, hydraulic (01414) (Lockheed spec dwg 668288-1) (NHA 783218-103) (61431-3 or 21-10108 is an alternate)	2	
	61431-3	FILTER ELEMENT, hydraulic (81321) (Lockheed spec dwg 668288-1) (NHA 783218-103) (AC930E11 or 21-10108 is an alternate)	REF	
	21-10108	FILTER ELEMENT, hydraulic (81873) (Lockheed spec dwg 668288-1) (NHA 783218-103) (alternate for AC930E11 or 61431-3)	REF	
	LS4634-10	GASKET (36659) (NHA 783218-3) (whn exh use NAS1596-10)	2	
-39	775256-101	CYLINDER ASSY, aileron servo LH (see T.O. 9H2-4-66-3) *(see fig. 3 for reqd)*	REF	
	775256-102	CYLINCER ASSY, aileron servo RH (see T.O. 9H2-4-66-3 *(see fig. 3 for reqd)*	REF	

Figura e particolare	NDR	1 2 3 4 5 6 7 DENOMINAZIONE	Quant.	Codice applicab.
		BOUNDARY LAYER CONTROL		
12	771956-3	. ELBOW INSTL, engine boundary layer control *(see fig. 243 for reqd)* . .	REF	
- 1	771957-1	. . ELBOW ASSY, boundary layer control LH	1	
	771957-2	. . ELBOW ASSY, boundary layer control RH	1	
		Attaching Parts		
- 2	NAS1004-1H	. . BOLT (80205)	6	
- 3	NAS1004-5A	. . BOLT (80205)	10	
- 4	MS20500-428	. . NUT (96906)	10	
		———— * ————		
- 5	17189-250C	. . GASKET, quick disconnect coupling (98625)	1	
	771956-5	. CLAMP INSTL, engine boundary layer control (NHA 849071-101) . . .	1	
- 6	846818-101	. . CLAMP ASSY, high temperature disconnect	1	
	18276-250	. . . COUPLING ASSY, quick disconnect (98625)	1	
	750532-3	. . . DECAL, high temperature disconnect	1	
	771956-1	. DUCT INSTL, engine boundary layer control LH *(see fig. 31 for reqd)* . .	REF	
	771956-2	. DUCT INSTL, engine boundary layer control RH *(see fig. 31 for reqd)* . .	REF	6701-6790; 6831-
—		C. DUCT INSTL, engine boundary layer control RH *(see fig. 31 for reqd)* . .	REF	6791-6830
- 7	18276-250	. . COUPLING ASSY, quick disconnect (98625)	1	
- 8	17189-250C	. . GASKET, quick disconnect coupling (98625)	1	
- 9	10445	. . DUCT, boundary layer control flexible (A0614) (70628) (Lockheed spec dwg 644799-1)	1	
-10	763684L	. . BRACKET ASSY, bleed air duct	1	
	763684R	. . BRACKET ASSY, bleed air duct	1	6701-6790; 6831-
	851997-101	C. . BRACKET ASSY, bleed air duct RH	1	6791-6830
-11	AN520C10R10	. . . SCREW (88044)	1	6701-6790; 6831-
	AN502-10-6	C. . . SCREW (88044)	1	6791-6830
-12	AN960C10	. . . WASHER (88044)	1	
-13	18276-275	. . COUPLING ASSY, quick disconnect (98625)	1	
-14	24096-275C	. . GASKET, quick disconnect coupling (98625)	1	
-15	766366-1	. . DUCT ASSY, boundary layer control forward	1	
	763360-103	A. VALVE INSTL, boundary layer control LH *(see fig. 31 for reqd)* . . .	REF	6701-6765
	763360-105	B. VALVE INSTL, boundary layer control LH *(see fig. 31 for redq)* . . .	REF	6766-
	763360-104	A. VALVE INSTL, boundary layer control RH *(see fig. 31 for reqd)* . . .	REF	6701-6765
	763360-106	B. VALVE INSTL, boundary layer control RH *(see fig. 31 for reqd)* . . .	REF	6766-
-16	763449	. . CLAMP, boundary layer control elbow	1	
-17	NAS1004-9A	. . BOLT (80205)	1	
-18	763446	. . WASHER, boundary layer control clamp	2	
-19	MS21043-4	. . NUT (96906)	1	
-20	763447	. . FLANGE, boundary layer control clamp	1	
		Attaching Parts		
	NAS221C10	. . SCREW (80205)	3	
	AN960C10L	. . WASHER (88044)	3	
	MS21043-3	. . NUT (96906)	3	
		———— * ————		
-21	763360-4	. . INSULATOR, boundary layer control	1	
	779271-101	A. . VALVE ASSY, boundary layer control LH (Modified and reidentified to 779271-105 per AA.1F-104-OT-704A) (see T.O. 16C1-3-14-3) *(see fig. 13)*	1	6701-6765
-22	779271-105	B. . VALVE ASSY, boundary layer control LH (Supersedes 779271-101 per AA.1F-104-OT-704A) (see T.O. 16C1-3-14-3) *(see fig. 13)* . . .	1	6766-
	779271-102	A. . VALVE ASSY, boundary layer control RH (Modified and reidentified to 779271-106 per AA.1F-104-OT-704A) (see T.O. 16C1-3-14-3) *(see fig. 13)*	1	6701-6765
	779271-106	B. . VALVE ASSY, boundary layer control RH (Supersedes 779271-102 per AA.1F-104-OT-704A) (see T.O. 16C1-3-14-3) *(see fig. 13)* . . .	1	6766-
-23	LS9336-8	. . GASKET, high temperature (36659)	1	
-24	NAS1004-5	. . BOLT (80205)	2	
	AN960C416L	. . WASHER (88044)	2	
	MS21043-4	. . NUT (96906)	2	
-25	763360-3	. . ANGLE, boundary layer control valve	2	
		Attaching Parts		
	NAS221C14	. . SCREW (80205)	4	
	AN960C10L	. . WASHER (88044)	4	
	MS21043-3	. . NUT (96906)	4	
		———— * ————		

Wing. Pneumatics

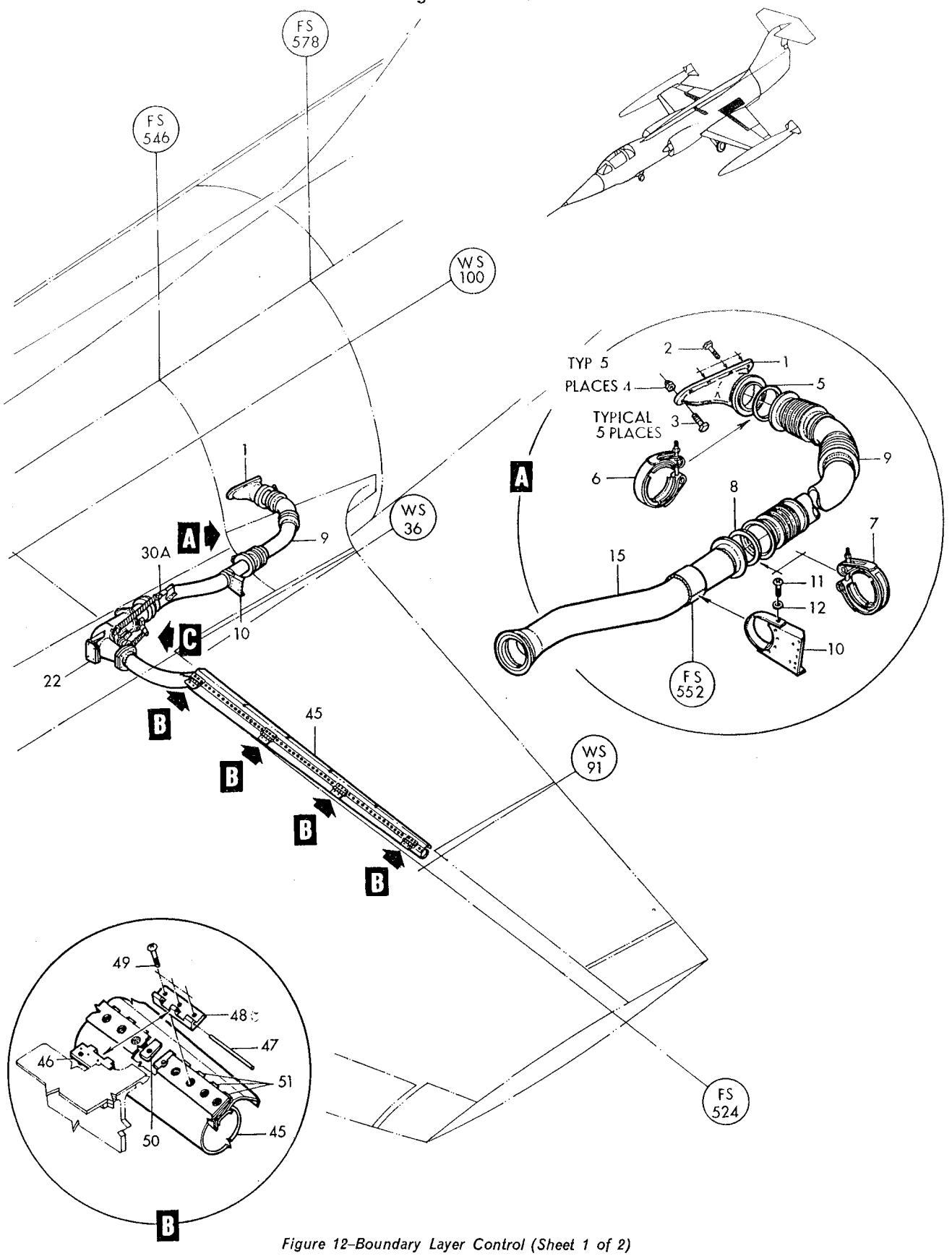

Figure 12–Boundary Layer Control (Sheet 1 of 2)

Wing Pneumatics

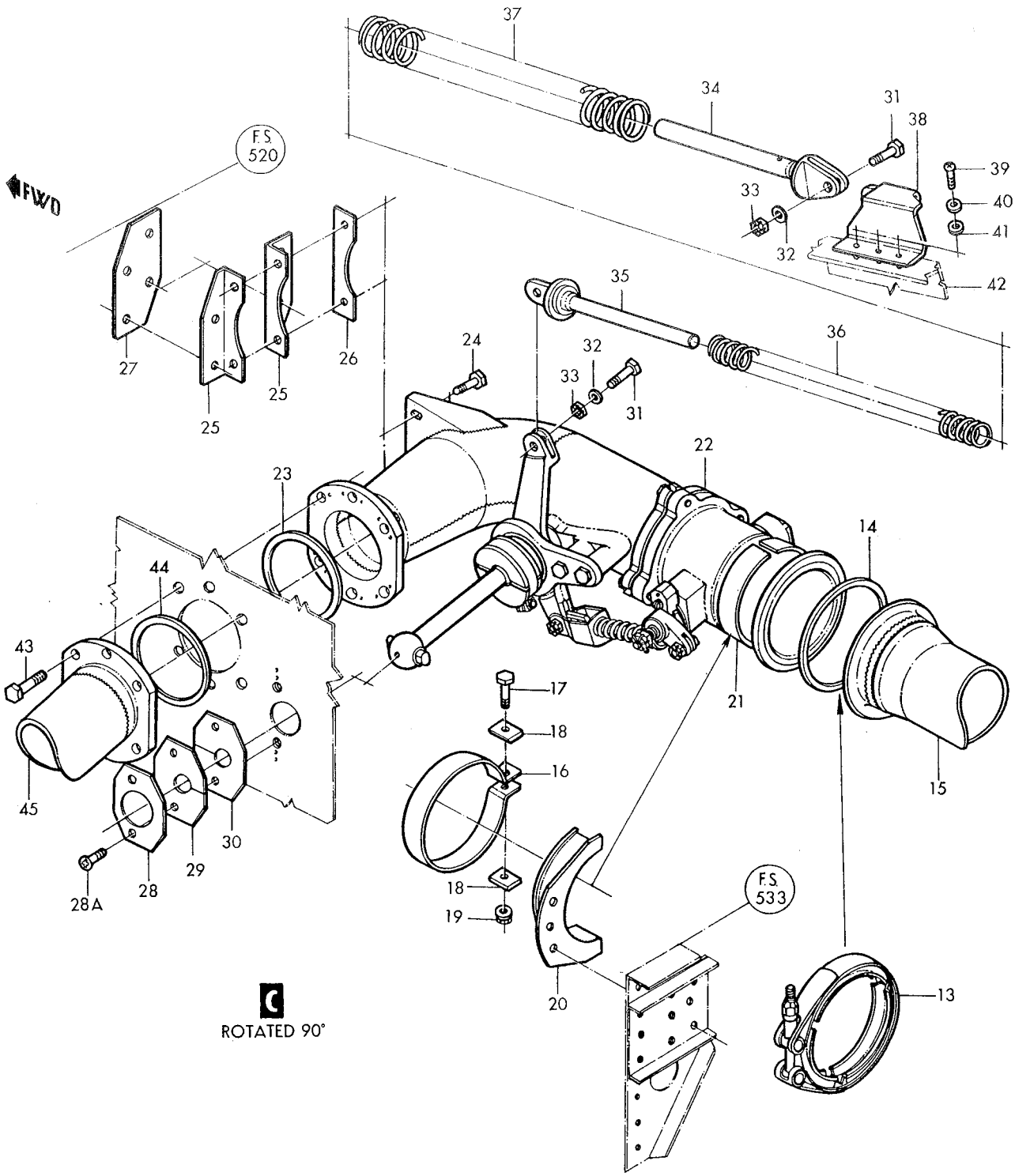

Figure 12–Boundary Layer Control (Sheet 2 of 2)

Figura e particolare	NDR	1	2	3	4	5	6	7	DENOMINAZIONE	Quant.	Codice applicab.
12-26	763453								SHIM, elbow	1	
-27	763452								INSULATOR, boundary layer control elbow	1	
-28	763451								RETAINER, seal	1	
									Attaching Parts		
-28A	NAS221C10								SCREW (80205)	2	
-29	763450-3								SEAL, boundary layer control shaft	1	
-30	763450-4								SEAL, boundary layer control shaft	1	
-30A	852112-101	B.							ROD ASSY, boundary layer control valve	1	
									Attaching Parts		
-31	851602-101	B.							BOLT	2	
-32	AN960-416L	B.							WASHER (88044)	2	
-33	AN320-4	B.							NUT (88044)	2	
	MS24665-151	B.							COTTER PIN (96906)	2	
-34	851568-101	B.							GUIDE, boundary layer control valve	1	
-35	851856-101	B.							ROD, boundary layer control valve	1	
-36	851570-101	B.							SPRING, inner	1	
-37	851582-101	B.							SPRING, outer	1	
-38	851571-103	B.							BRACKET, BLC spring attach LH	1	
	851572-104	B.							BRACKET, BLC spring attach RH	1	
									Attaching Parts		
-39	NAS623-3-6	B.							SCREW (80205)	3	
-40	AN960-10L	B.							WASHER (88044)	3	
-41	MS21042L3	B.							NUT (96906)	3	
-42	761222-11L								SUPPORT INSTL, dive flap cylinder LH *(see fig. 31 for reqd)*	REF	
-43	NAS1004-8A								BOLT (80205) *(see fig. 2 for reqd)*	REF	
-44	LS9336-8								GASKET, high pressure high temperature (36659) (NHA 849229-101) (NHA 849229-102) (NHA FL3000-101) (FL3000-102)	1	
	784638-1								DUCT INSTL, boundary layer control LH *(see fig. 2 for reqd)*	REF	6701-6815
	784638-101								DUCT INSTL, boundary layer control LH *(see fig. 2 for reqd)*	REF	6816-
	784638-2								DUCT INSTL, boundary layer control RH *(see fig. 2 for reqd)*	REF	6701-6815
	784638-102								DUCT INSTL, boundary layer control RH *(see fig. 2 for reqd)*	REF	6816-
-45	784637-1								DUCT ASSY, boundary layer control LH	1	6701-6815
	784637-111								DUCT ASSY, boundary layer control LH	1	6816-
	784637-2								DUCT ASSY, boundary layer control RH	1	6701-6815
	784637-112								DUCT ASSY, boundary layer control RH	1	6816-
									Attaching Parts		
	NAS1203-5								SCREW (80205)	8	
-46	775898-1								HINGE ASSY, boundary layer control duct forward	4	
-47	784637-15								PIN, boundary layer control hinge	4	
-48	761942								HINGE, boundary layer control duct	4	
									Attaching Parts		
-49	BB351-6-5								BOLT ASSY, blind (73197)	3	
-50	775338-1								SPACER, boundary layer control duct (used for alignment)	AR	
-51	775556-1								SPACER, boundary layer control duct rework (used for alignment)	AR	

A - Removed per AA.1F-104-OT-704A
B - Reqd per AA.1F-104-OT-704A
C - Only per partial incorporation of SPU system

Figura e particolare	NDR	1 2 3 4 5 6 7 DENOMINAZIONE	Quant.	Codice applicab.
		BOUNDARY LAYER CONTROL VALVE		
13	779271-101	A. VALVE ASSY, boundary layer control LH (Modified and reidentified to 779271-105 per AA.1F-104-OT-704A) (see T.O. 16C1-3-14-3) *(see fig. 12 for reqd)*	REF	6701-6765
	779271-105	B. VALVE ASSY, boundary layer control LH (Supersedes 779271-101 per AA.1F-104-OT-704A) (see T.O. 16C1-3-14-3) *(see fig. 12 for reqd)*	REF	6766-
	779271-102	A. VALVE ASSY, boundary layer control RH (Modified and reidentified to 779271-106 per AA.1F-104-OT-704A) (see T.O. 16C1-3-14-3) *(see fig. 12 for reqd)*	REF	6701-6765
	779271-106	B. VALVE ASSY, boundary layer control RH (Supersedes 779271-102 per AA.1F-104-OT-704A) (see T.O. 16C1-3-14-3) *(see fig. 12 for reqd)*	REF	6766-
- 1	MS24665-153	. . COTTER PIN (96906)	1	
- 2	AN310C4	. . NUT (88044)	1	
- 3	AN960C416L	. . WASHER (88044) (3 reqd on 779271-105 and 2 reqd on 779271-106)	AR	
- 4	AN960C416	. . WASHER (88044) (2 reqd on 779271-106 and 3 reqd on 779271-105)	AR	
- 4A	NAS43-4-18	. . SPACER (80205) (1 reqd on 779271-105 and 2 reqd on 779271-106)	AR	
- 5	847391-109	. . BOLT, flap asymmetry detector (make from NAS1004-24)	1	
- 6	MS24665-153	. . COTTER PIN (96906)	1	
- 7	AN310C4	. . NUT (88044)	1	
- 8	AN960C416L	. . WASHER (88044)	1	
- 9	726407-3	. . BOLT, boundary layer control valve lever	1	
-10	726355-3	. . LINK, boundary layer control valve adjusting	1	
-11	847524-101	. . SPRING, boundary layer control valve	1	
-12	851307-101	. . RETAINER, boundary layer control valve spring	1	
-13	763352	. . LINK, boundary layer control valve slotted	1	
-14	AN363C1032	. . NUT (88044)	1	
-15	AN960C10L	. . WASHER (88044)	1	
-16	CC221-8	. . SCREW (93907)	1	
-17	726399-3	. . CLAMP, boundary layer control valve shaft	1	
-18	763350	. . RETAINER, boundary layer control valve shaft	2	
-19	CC4H5A	. . BOLT (93907)	2	
-20	AN960C416	. . WASHER (88044)	2	
-21	763497-5	. . PLATE ASSY, boundary layer control valve	1	
	726395-5	. . . BUSHING, boundary layer control valve plate	1	
	763497-3	. . . PLATE, boundary layer control valve	1	
	763454L	A. . ARM, boundary layer control valve	1	6701-6765
-23	851567-101	B. . CRANK, boundary layer control valve LH	1	
	763454R	A. . ARM, boundary layer control valve	1	6701-6765
	851567-102	. . CRANK, boundary layer control valve RH	1	
	763359	. . SHAFT ASSY, boundary layer control valve	1	
-24	NAS561P3-8	. . . ROLL PIN (80205)	2	
-25	763355	. . . PIN, boundary layer control valve shaft	2	
-26	763356	. . . SHAFT, boundary layer control valve actuating	1	
	773548-3	. . BUTTERFLY ASSY, boundary layer control valve LH	1	
	773548-4	. . BUTTERFLY ASSY, boundary layer control valve RH	1	
-27	MS24665-153	. . . COTTER PIN (96906)	1	
-28	AN310C4	. . . NUT (88044)	1	
-29	AN960C416L	. . . WASHER (88044)	1	
-30	726403-3	. . . SPRING, boundary layer control valve stem	1	
-31	768204-1	. . . WASHER, boundary layer control valve spindle	1	
-32	768203-1	. . . LEVER, boundary layer control valve	1	
-33	AN501AC10-12	. . . SCREW (88044)	1	
-34	773448-1	. . . LOCK, boundary layer control nut	1	
-35	771689-1	. . . NUT, boundary layer control valve internal	1	
-36	771578-1	. . . WASHER, boundary layer control valve seal	1	
-37	768087-1	. . . SEAL, boundary layer control valve	1	
-38	768198-1	. . . SPINDLE, boundary layer control valve	1	
-39	768199-1	. . . DISC, boundary layer control valve	1	
-40	770406-1	. . . RING, boundary layer control valve	1	
-41	727049-1	. . . SPRING, boundary layer control valve disc	1	
-42	770406-3	. . . RING, boundary layer control valve	1	
-43	768200-1	. . . NUT, boundary layer control valve external	1	

Wing Pneumatics

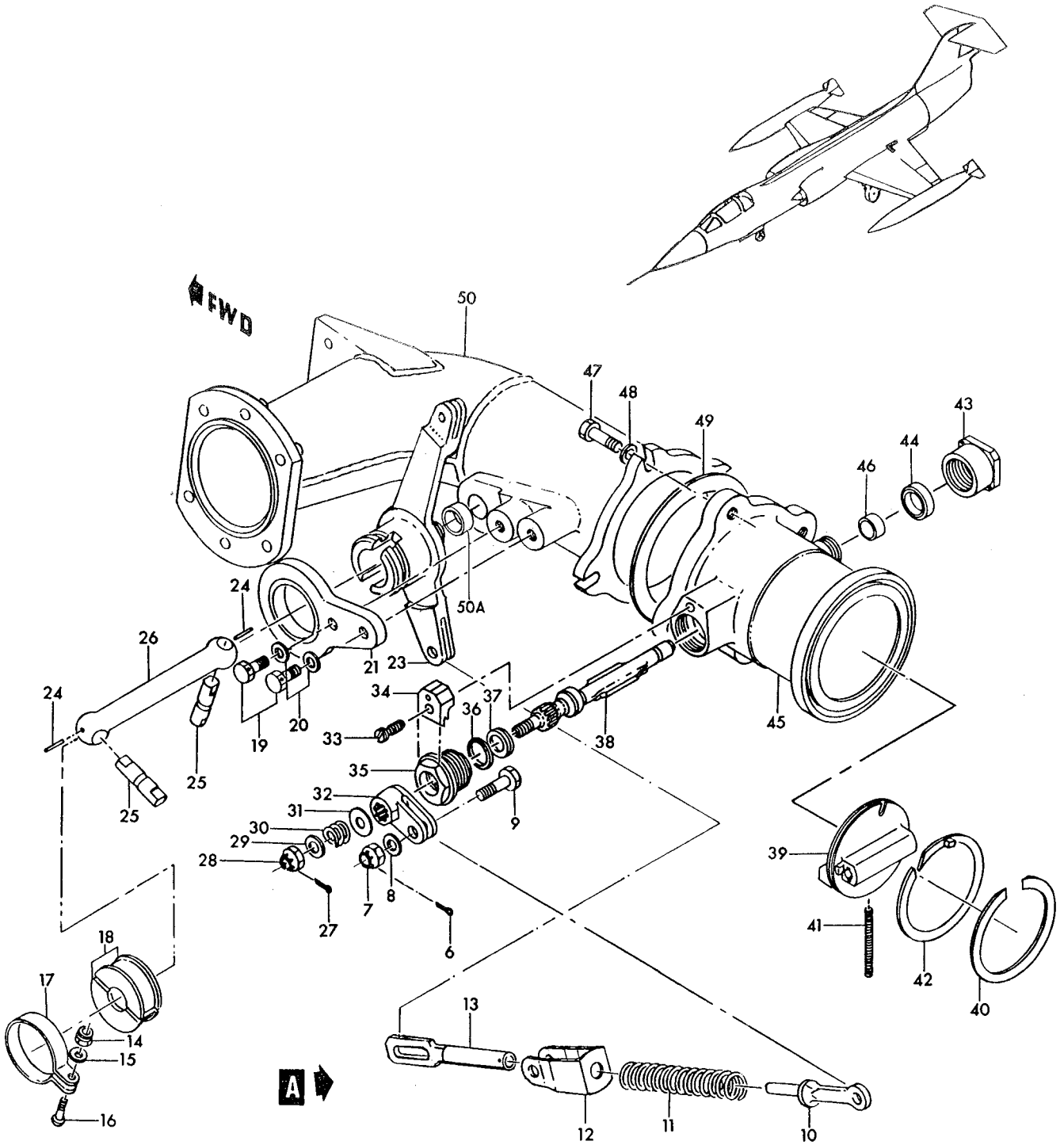

Figure 13— Boundary Layer Control Valve (Sheet 1 of 2)

Wing Pneumatics

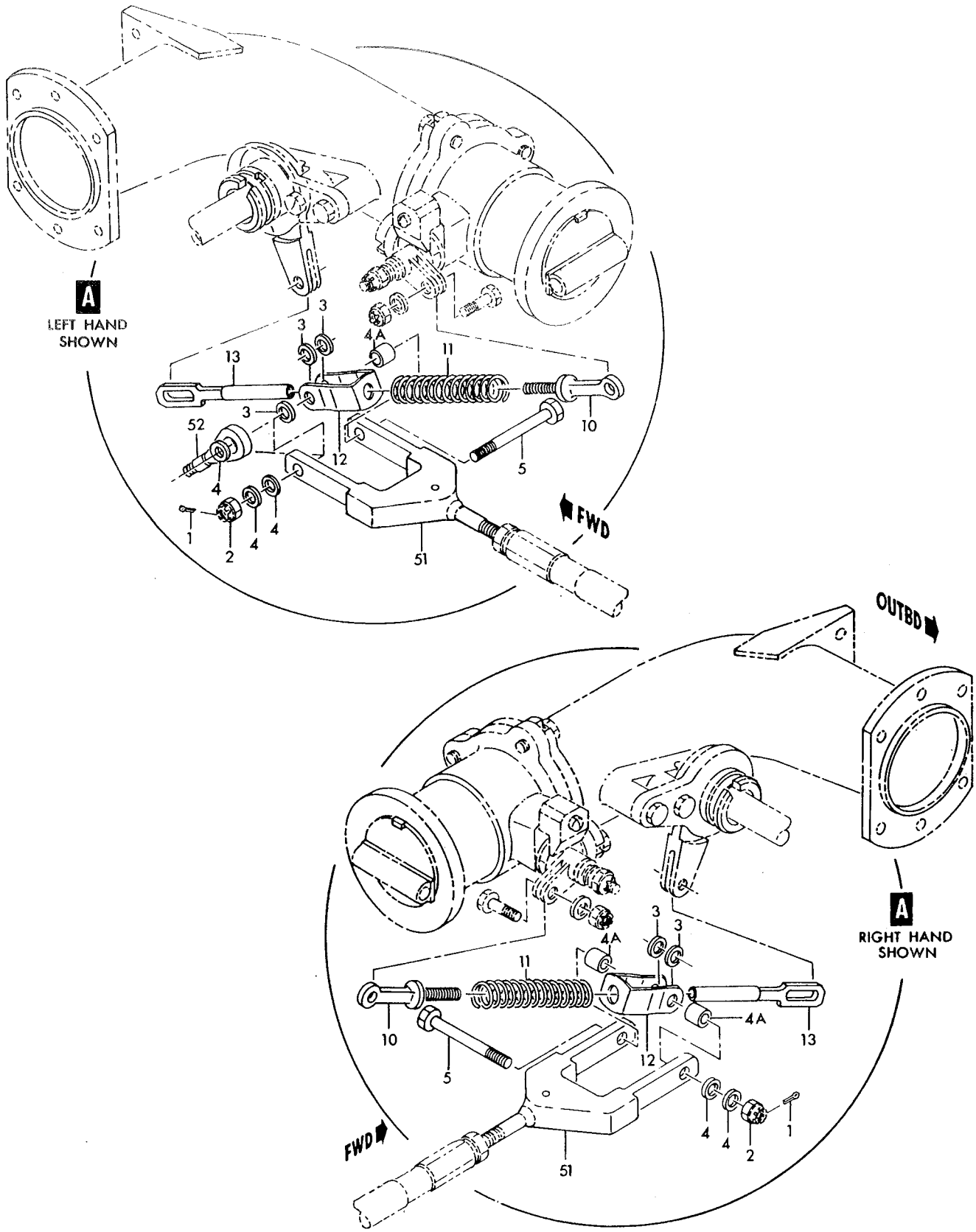

Figure 13— Boundary Layer Control Valve (Sheet 2 of 2)

Figura e particolare	NDR	DENOMINAZIONE 1 2 3 4 5 6 7	Quant.	Codice applicab.
13-44	771577-1	WASHER, boundary layer control valve	1	
-45	772329-1	BODY ASSY, boundary layer control valve aft LH	1	
	772329-2	BODY ASSY, boundary layer control valve aft RH	1	
-46	768086-1	BUSHING, boundary layer control valve spindle	1	
-47	CC4H6A	BOLT (93907)	4	
-48	AN960C416	WASHER (88044)	4	
-49	LS9336-10	GASKET, high pressure high temperature (36659)	1	
-50	779271-3	ELBOW ASSY, boundary layer control valve LH	1	
	779271-4	ELBOW ASSY, boundary layer control valve RH	1	
-50A	726394-5	BUSHING, boundary layer control valve body	1	
-51	847390-103	FORK, asymmetry detector *(see fig. 14 for reqd)*	REF	
-52	NAS648-32RS	EYE (80205) *(see fig. 192 for reqd)*	REF	

A - Removed per AA.1F-104-OT-704A
B - Reqd per AA.1F-104-OT-704A

Figura e particolare	NDR	1 2 3 4 5 6 7	DENOMINAZIONE	Quant.	Codice applicab.
			TRAILING EDGE FLAP ASYMMETRY DETECTOR AND CONTROLS		
14	847383-113		CABLE INSTL, asymmetry detector (NHA 849140-101)	1	
-1	847390-103		FORK, asymmetry detector *(see fig. 13)*	2	
-2	NAS509-4		NUT (80205)	2	
-3	AN935-416L		WASHER (88044)	2	
	MS24665-153		COTTER PIN (96906)	1	
-4	AN310C4		NUT (88044)	1	
-5	AN960C416		WASHER (88044)	2	
-6	NAS1004-8		BOLT (80205)	1	
-7	847475-101		BARREL, flap asymmetry push rod	1	
-8	NAS648-32LS		EYE (80205)	1	
	847383-109		CONTROL INSTL, LH asymmetry detector *(see fig. 31 for reqd)*	REF	6701-6790
	—	C.	CONTROL INSTL, LH asymmetry detector *(see fig. 31 for reqd)*	REF	6791-6830
	847383-117		CONTROL INSTL, LH asymmetry detector *(see fig. 31 for reqd)*	REF	6831-
-9	AN960D10		WASHER (88044)	5	
-9A	AN960D10	D.	WASHER (88044)	3	
-10	NAS43DD3-16		SPACER (80205)	3	
-10A	NAS43DD3-16		SPACER (80205)	1	6701-6790; 6831-
-10B	NAS43DD3-16	D.	SPACER (80205)	1	
-11	NAS43DD3-40		SPACER (80205)	1	
-11A	NAS43DD3-40		SPACER (80205)	1	6701-6790; 6831-
-12	LS7357SST5		CLAMP, cushioned synthetic oil and fuel resistant loop (36659)	6	
-12A	LS7357SST5	D.	CLAMP, cushioned synthetic oil and fuel resistant loop (36659)	3	
-13	NAS1096-3-12		SCREW (80205)	2	
-13A	NAS1096-3-12		SCREW (80205)	1	6701-6790; 6831-
-13B	NAS1096-3-12	D.	SCREW (80205)	1	
-14	NAS1096-3-18		SCREW (80205)	1	
-14A	NAS1096-3-18		SCREW (80205)	1	6701-6790; 6831-
-14B	MS21042L3		NUT (96906)	5	
-14C	MS21042L3	D.	NUT (96906)	3	
-15	NAS1096-3-7		SCREW (80205)	1	
-15A	NAS603-8P	C.	SCREW (80205)	1	6791-6830
-16	NAS517-3-8		SCREW (80205)	1	
-16A	NAS603-16P	C.	SCREW (80205)	1	6791-6830
-16B	NAS43HT3-32	C.	SPACER (80205)	1	6791-6830
-17	15489		CONNECTOR, line (78710)	3	
-17A	15489		CONNECTOR, line (78710)	1	6701-6790; 6831-
-18	765337-125		TUBE ASSY, flap asymmetry detector	1	
-19	765337-127		TUBE ASSY, flap asymmetry detector	1	
-19A	765337-127		TUBE ASSY, flap asymmetry detector	1	6701-6790; 6831-
-20	765337-129		TUBE ASSY, flap asymmetry detector	1	
-21	765337-137		TUBE ASSY, flap asymmetry detector	1	6701-6790; 6831-
-21A	765337-143	C.	TUBE ASSY, flap asymmetry detector	1	6791-6830
-22	22422-1	D.	CABLE, 187A size helical wound mechanical (78710)	1	
-23	847396-103		CONTROL ASSY, LH asymmetry detector	1	6701-6815
	847396-105		CONTROL ASSY, LH asymmetry detector	1	6816-
			Attaching Parts		
-24	NAS623-3-7		SCREW (80205)	3	
-25	NAS623-3-3		SCREW (80205)	3	
-26	NAS623-4-3		SCREW (80205)	2	
-27	NAS623-4-16		SCREW (80205)	3	
-28	AN960D416		WASHER (88044)	3	
-29	NAS1195DD3WH		SHIM (80205)	6	
-30	847388-101		FILLER, LH asymmetry detector	1	
-31	MS21042L4		NUT (96906)	3	
			*		
-32	22424-15		CASING ASSY, inverted nut type spent travel rigid control (78710)	1	
-33	NAS1351C4H14		SCREW (80205)	2	
-34	MS21042L4		NUT (96906)	2	
-35	AN970-4		WASHER (88044)	1	

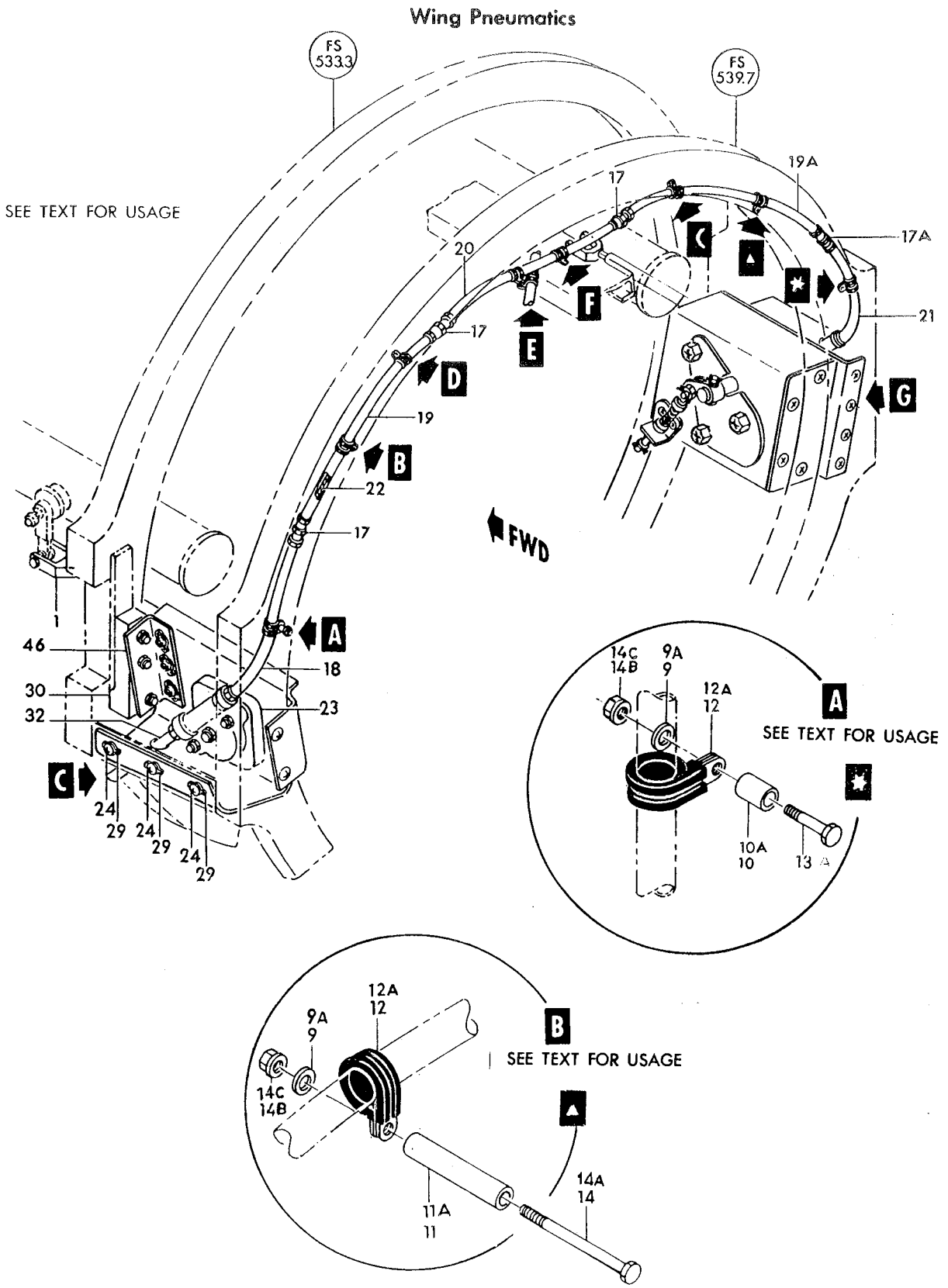

Figure 14— Trailing Edge Flap Asymmetry Detector and Controls (Sheet 1 of 4)

Wing Pneumatics

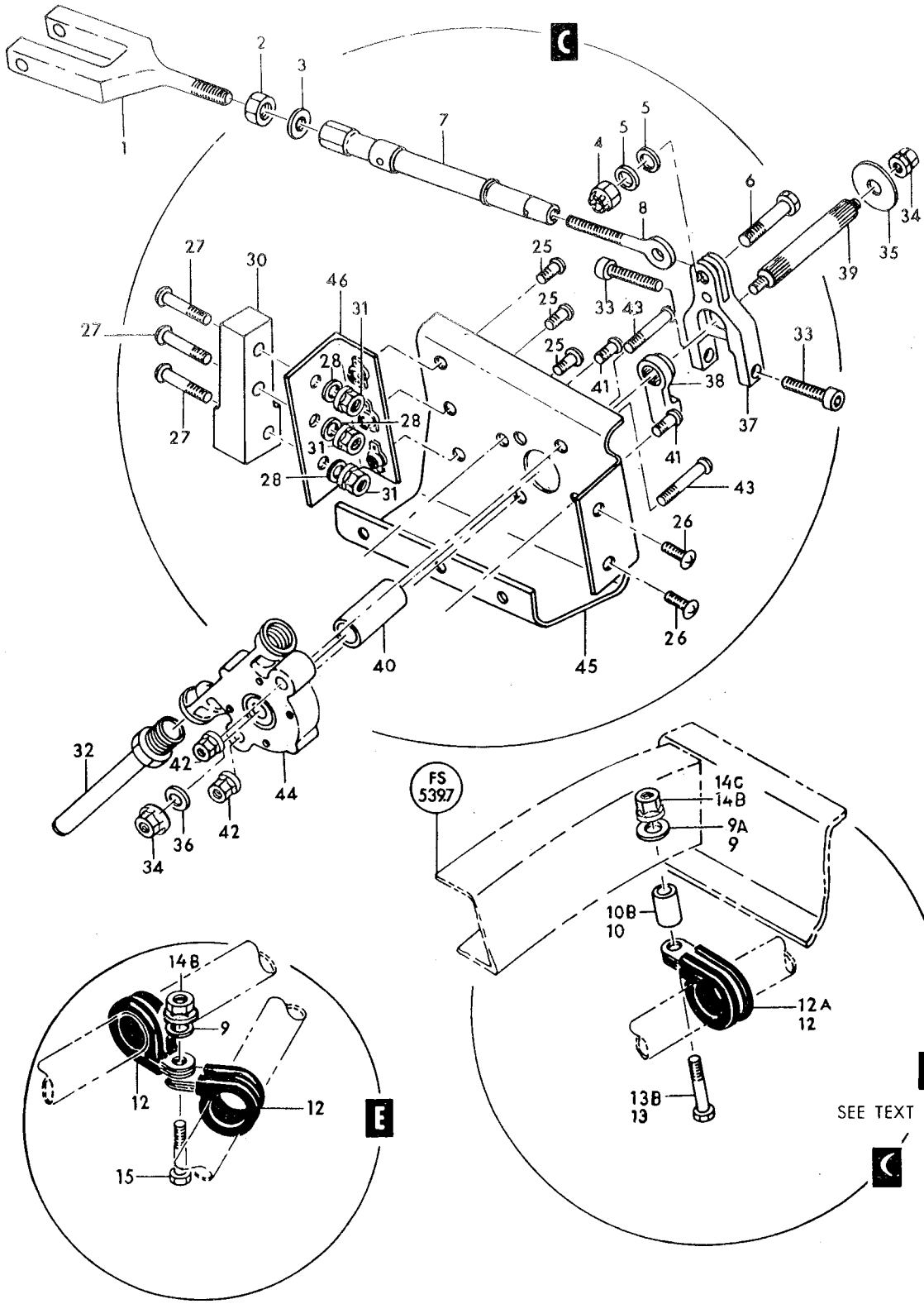

Figure 14—Trailing Edge Flap Asymmetry Detector and Controls (Sheet 2 of 4)

Wing Pneumatics

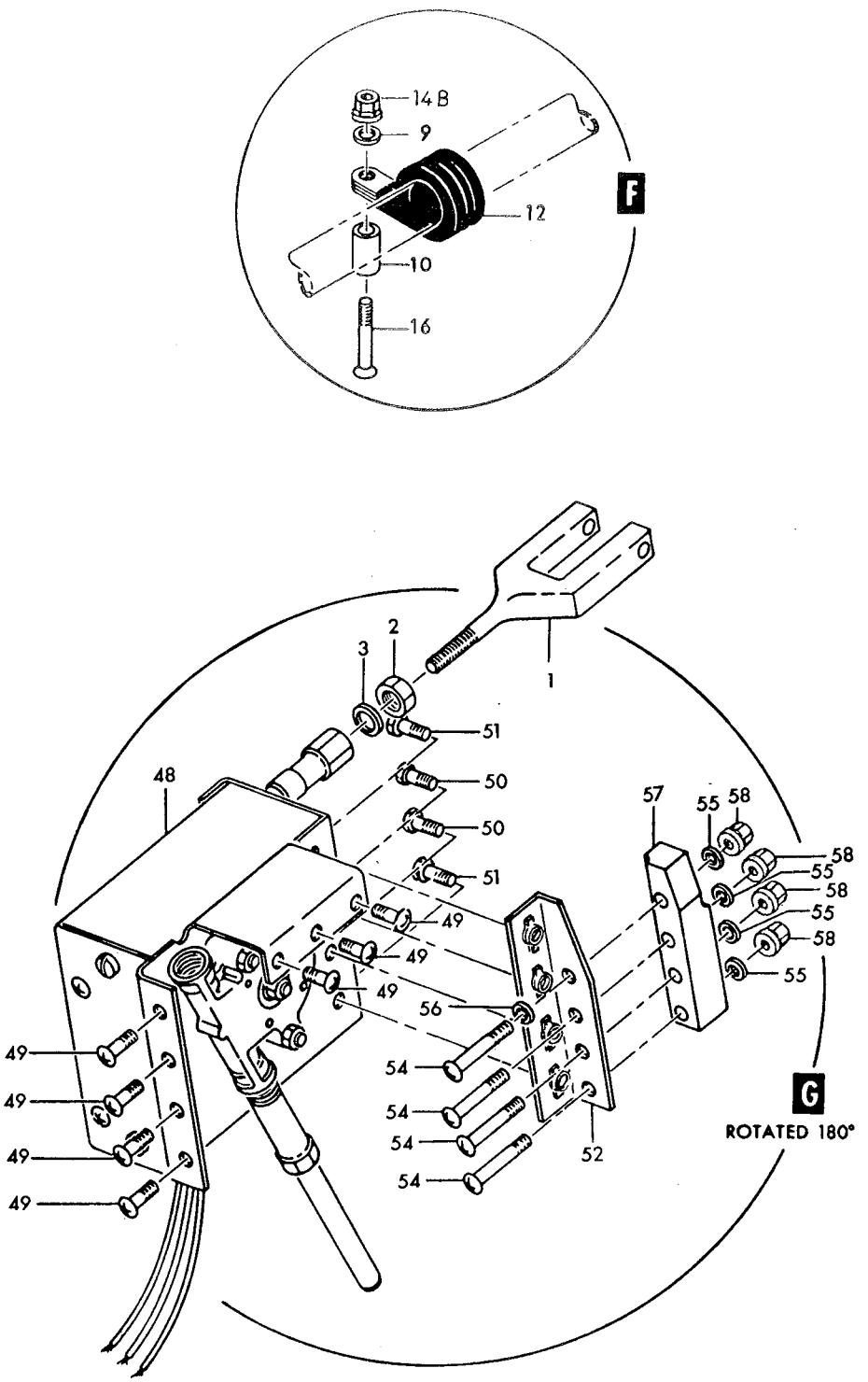

Figure 14— Trailing Edge Flap Asymmetry Detector and Controls (Sheet 3 of 4)

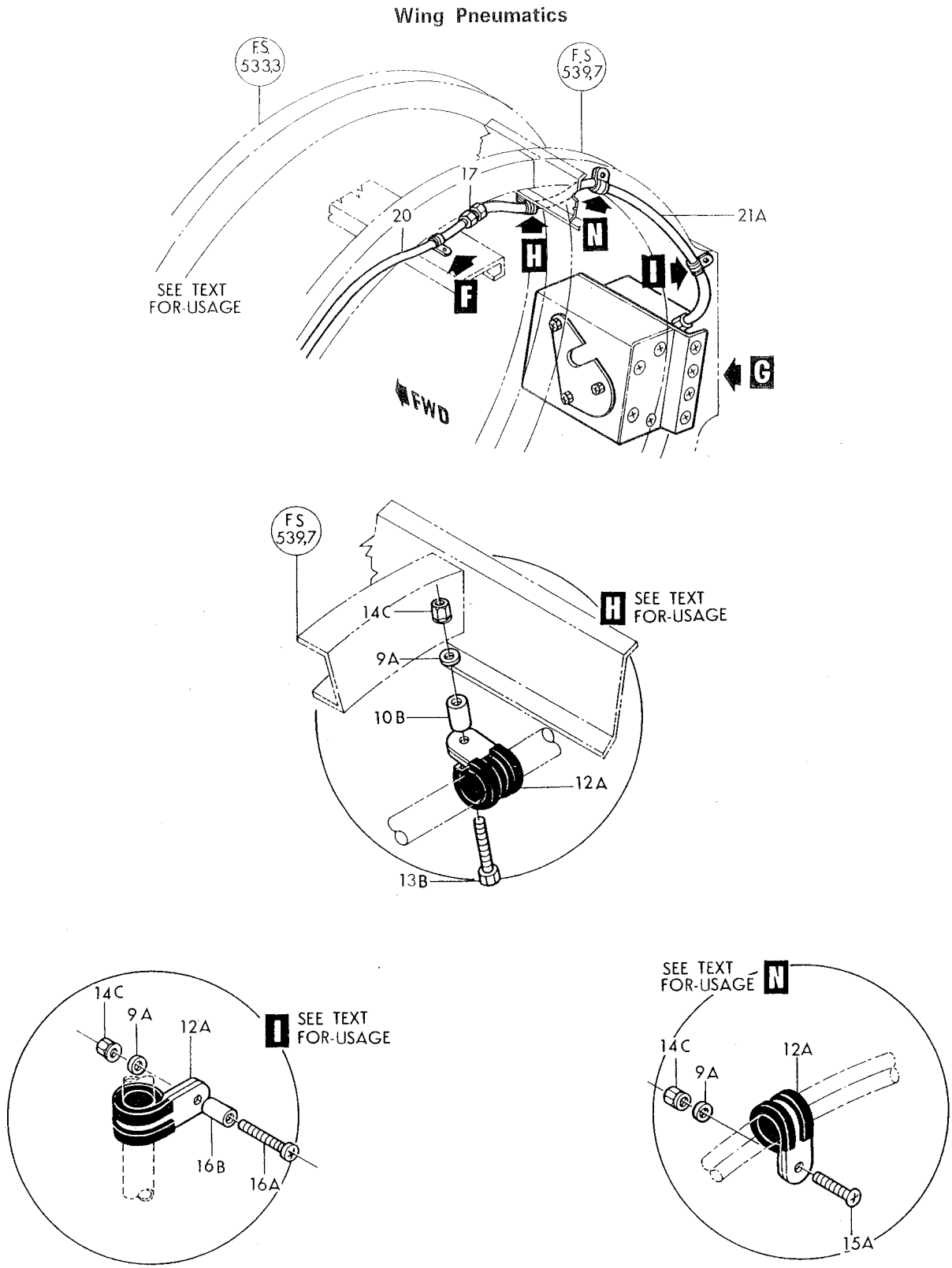

Figure 14-Trailing Edge Flap Asymmetry Detector and Controls (Sheet 4 of 4)

Figura e particolare	NDR	1 2 3 4 5 6 7 DENOMINAZIONE	Quant.	Codice applicab.
14-36	AN960-416	WASHER (88044)	1	
-37	847385-101	ARM, LH asymmetry detector	1	
-38	847460-101	LEVER, LH asymmetry detector	1	
-39	847389-101	SHAFT, LH asymmetry detector serrated	1	
-40	847386-101	BUSHING, LH asymmetry detector	1	
-41	NAS623-3-2	SCREW (80205)	2	
-42	MS21042L3	NUT (96906)	2	
-43	NAS623-3-20	SCREW (80205)	2	
-44	22549	HOUSING ASSY, rotary linear control (78710)	1	
-45	847384-101	BRACKET, asymmetry detector control box	1	6701-6815
	847384-103	BRACKET, asymmetry detector control box	1	6816-
-46	847387-101	CLIP, LH asymmetry detector	1	
	847383-111	DETECTOR INSTL, RH trailing edge flap asymmetry *(see fig. 31 for reqd)*	1	6701-6765
	847383-115	DETECTOR INSTL, RH trailing edge flap asymmetry *(see fig. 31 for reqd)*	REF	6766-
-48	847400-103	A. DETECTOR ASSY, RH trailing edge flap asymmetry (Modified and reidentified to 851565-103 per AA.1F-104-OT-704A) *(see fig. 15)*	1	6701-6765
	851565-103	B. DETECTOR ASSY, RH trailing edge flap asymmetry (Supersedes 847400-103 per AA.1F-104-OT-704A) *(see fig. 15)*	1	6766-
		Attaching Parts		
-49	NAS623-3-3	SCREW (80205)	7	
-50	NAS1103-3	BOLT (80205)	2	
-51	NAS1103-4	BOLT (80205)	2	
		*		
-52	847411-101	ANGLE, flap asymmetry detector	1	
		Attaching Parts		
-54	NAS623-3-14	SCREW (80205)	4	
-55	AN960D10	WASHER (88044)	4	
-56	LS884-10	WASHER, plain aluminum (36659)	1	
-57	847412-101	FILLER, flap asymmetry detector	1	
-58	MS21042L3	NUT (96906)	4	

A - Removed per AA.1F-104-OT-704A
B - Reqd per AA.1F-104-OT-704A
C - Only per partial incorporation of SPU system
D - All parts marked with letter D serve also to install partial incorporation of SPU system

Figura e particolare	NDR	1 2 3 4 5 6 7 DENOMINAZIONE	Quant.	Codice applicab.
		TRAILING EDGE FLAP ASYMMETRY DETECTOR ASSEMBLY		
15	847400-103	A. DETECTOR ASSY, trailing edge flap asymmetry (Modified and reidentified to 851565-103 per AA.1F-104-OT-704A) *(see fig. 14 for reqd)*	REF	6701-6765
	851565-103	B. DETECTOR ASSY, trailing edge flap asymmetry (Supersedes 847400-103 per AA.1F-104-OT-704A) *(see fig. 14 for reqd)*	REF	6766-
-1	847475-101	. . BARREL, flap asymmetry push rod	1	
-2	22425-15	. . CASING ASSY, anti-torque travel rigid control (78710)	1	
	MS24665-151	. . COTTER PIN (96906)	1	
-3	AN960C416	. . WASHER (88044)	1	
-4	AN310C3	. . NUT (88044)	1	
-5	AN960C10	. . WASHER (88044)	1	
-6	NAS1003-6	. . BOLT (80205)	1	
-7	847499-101	. . WASHER, trailing edge flap asymmetry detector	2	
-8	847527-101	. . SPRING, traling edge flap asymmetry detector	1	
-9	847419-101	. . ROD, asymmetry detector	1	
	MS24665-149	. . COTTER PIN (96906)	1	
-10	AN960C6	. . WASHER (88044)	1	
-11	MS20392-1C21	. . PIN (96906)	1	
-12	847418-101	. . ARM, asymmetry detector	1	
-13	847428-101	. . COVER, flap asymmetry detector	1	
		Attaching Parts		
-14	NAS1096-3-6	. . SCREW (80205)	3	
		✲		
-15	847491-101	. . COVER, flap asymmetry detector	1	
		Attaching Parts		
-16	NAS623-3-2	. . SCREW (80205)	2	
		✲		
-17	847429-101	. . COVER, flap asymmetry detector	1	
		Attaching Parts		
-18	NAS623-3-1	. . SCREW (80205)	2	
-19	AN502-10-6	. . SCREW (88044)	2	
		✲		
-20	MS21042L3	. . NUT (96906)	1	
-21	NAS1351-3-12	. . SCREW (80205)	1	
-22	MS21042L4	. . NUT (96906)	1	
-23	AN960C416	. . WASHER (88044)	1	
-24	847410-101	. . SHAFT, flap asymmetry detector	1	
-25	5710-85-16	. . WASHER (86928)	1	
-26	847409-101	A. . CAM, flap asymmetry detector	1	6701-6765
-26A	851566-101	B. . CAM, flap asymmetry detector	1	
-27	22423	. . HOUSING ASSY, rotary linear control (78710)	1	
		Attaching Parts		
-28	NAS1103-14	. . BOLT (80205)	2	
-29	AN960D10	. . WASHER (88044)	2	
		✲		
-30	847402-101	A. . SWITCH ASSY, flap asymmetry detector (Modified and reidentified to 847402-105 per AA.1F-104-OT-704A)	1	6701-6765
	847402-105	B. . SWITCH ASSY, flap asymmetry detector (Supersedes 847402-101 per AA.1F-104-OT-704A)	1	6766-
-31	NAS1096-2-20	. . . SCREW (80205)	2	
-32	847417-101	. . . STRAP ASSY, asymmetry detector	1	
-33	1HS28	. . . SWITCH, (S163) basic (91929)	1	
	MS24665-153	. . . COTTER PIN (96906)	1	
-34	AN320C4	. . . NUT (88044)	1	
-35	847543-101	. . . BOLT, trailing edge flap asymmetry detector	1	
-36	NAS43DD4-42	. . . SPACER (80205)	1	
-37	NAS648-32LS	. . . EYE (80205)	1	
	847402-103	A. . . LEVER ASSY, asymmetry detector flap switch (Modified and reidentified to 847402-107 per AA.1F-104-OT-704A)	1	6701-6765

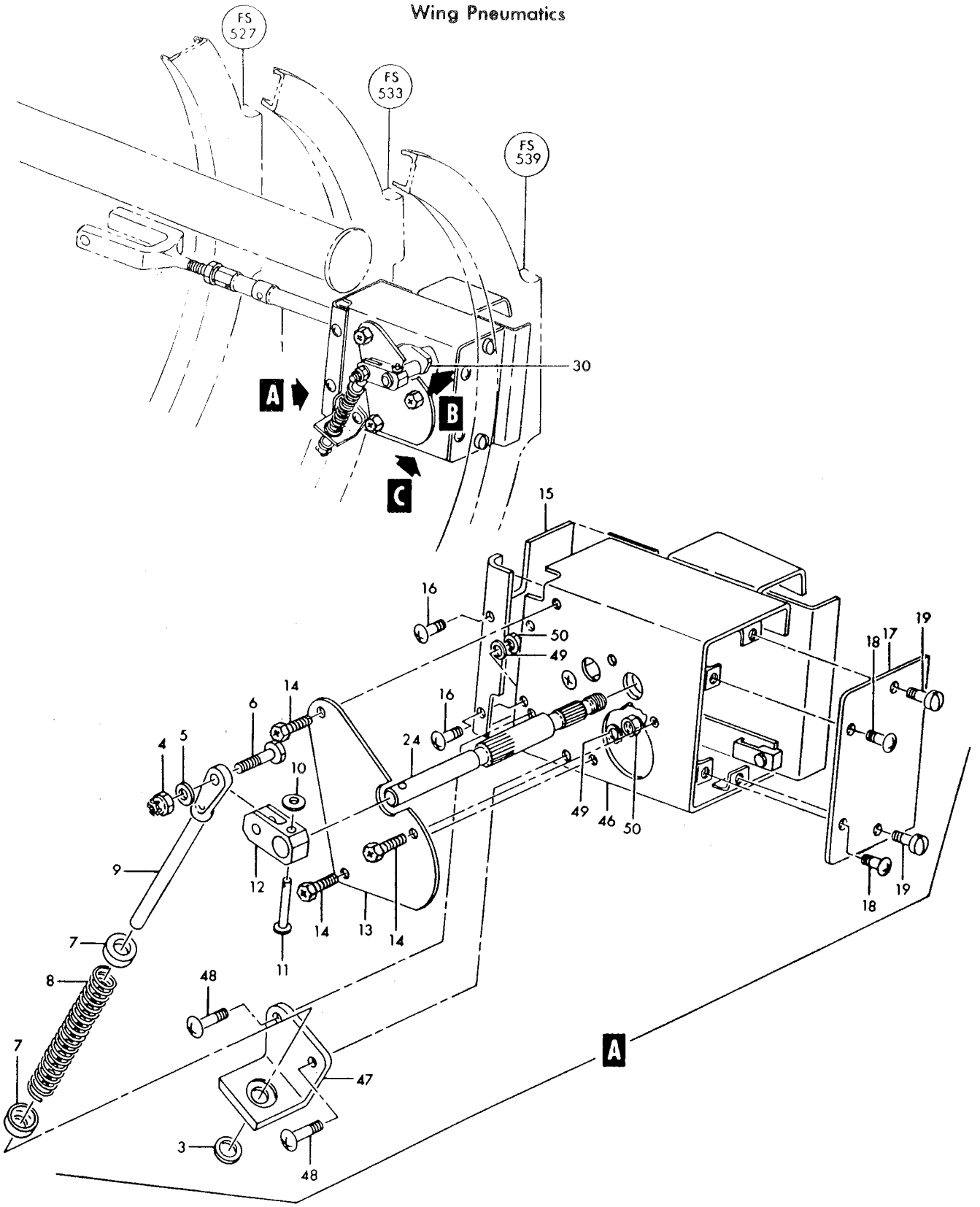

Figure 15—Trailing Edge Flap Asymmetry Detector Assembly (Sheet 1 of 2)

Wing Pneumatics

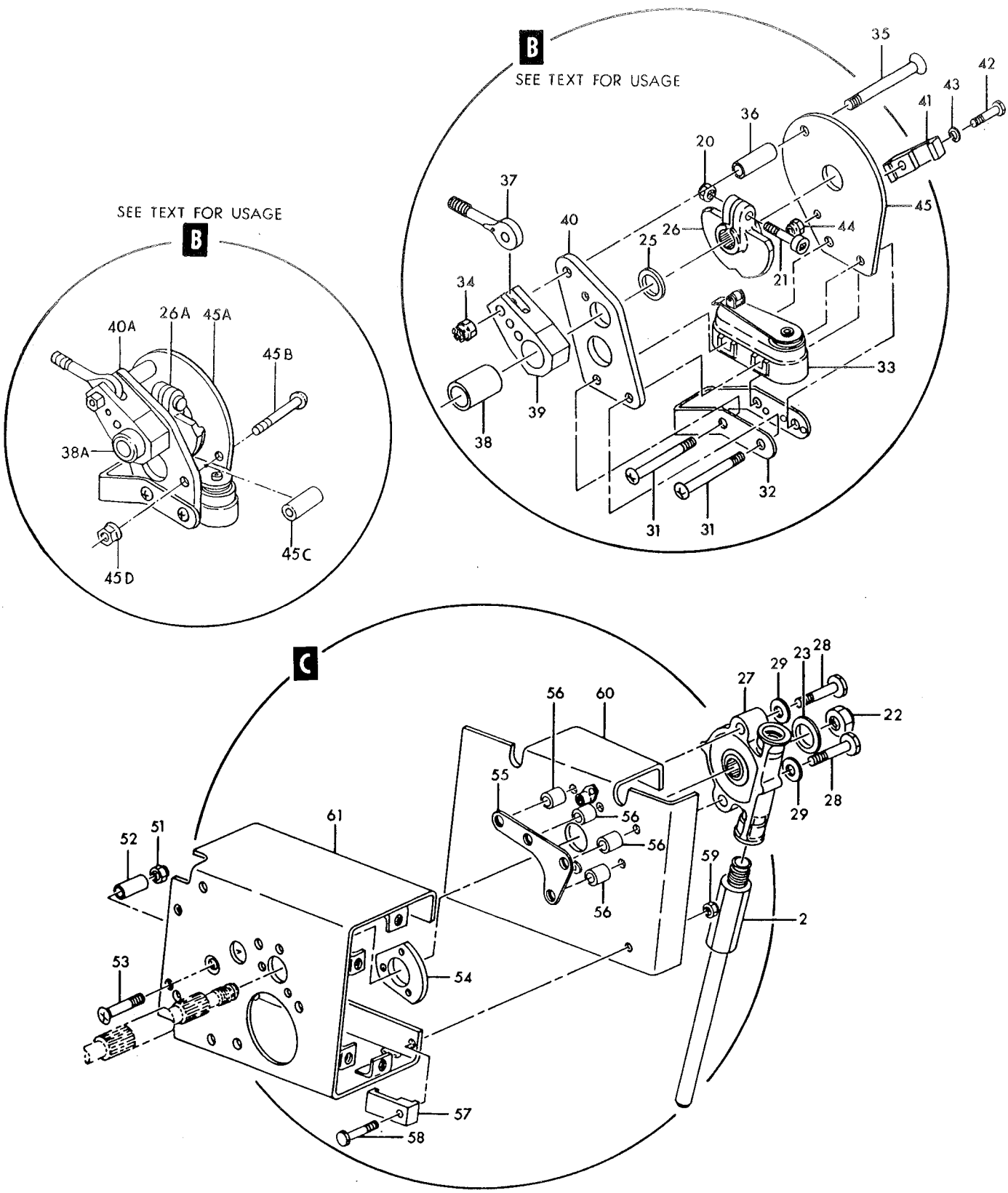

Figure 15—Trailing Edge Flap Asymmetry Detector Assembly (Sheet 2 of 2)

Figura e particolare	NDR	1 2 3 4 5 6 7 DENOMINAZIONE	Quant.	Codice applicab.
15	847402-107	B. . . LEVER ASSY, asymmetry detector flap switch (Supersedes 847492-103 per AA.1F-104-OT-704A)	1	6766-
	847408-101	A. . . . LEVER ASSY, flap asymmetry detector (Modified and reidentified to 851564-101 per AA.1F-104-OT-704A)	1	6701-6765
	851564-101	B. . . . LEVER ASSY, flap asymmetry detector (Supersedes 847408-101 per AA.1F-104-OT-704A)	1	6766-
-38	847403-101	A. . . . . BUSHING, flap asymmetry detector	1	6701-6765
-38A	YTS806	B. . . . . BUSHING, flap asymmetry detector (77896)	1	
-39	847408-103	. . . . . LEVER, flap asymmetry detector	1	
-40	847406-101	A. . . . PLATE, flap asymmetry detector	1	6701-6765
-40A	851592-101	B. . . . PLATE, flap asymmetry detector	1	
-41	847413-103	. . . CLAMP, flap asymmetry detector	1	
		Attaching Parts		
-42	NAS517-3-3	. . . SCREW (80205)	1	
-43	AN960D10	. . . WASHER (88044)	1	
-44	MS21042L3	. . . NUT (96906)	1	
		———— * ————		
-45	847407-101	A. . . PLATE, flap asymmetry detector	1	6701-6765
-45A	851589-101	B. . . PLATE, flap asymmetry detector	1	
-45B	NAS623-3-14	B. . . SCREW (80205)	1	
-45C	NAS43DD3-42	B. . . SPACER (80205)	1	
-45D	MS21042L3	B. . . NUT (96906)	1	
-46	847401-101	. . HOUSING ASSY, flap asymmetry detector	1	
-47	847492-101	. . . BRACKET, flap asymmetry detector	1	
		Attaching Parts		
-48	NAS623-3-3	. . . SCREW (80205)	2	
-49	AN960D10	. . . WASHER (88044)	2	
-50	MS21042L3	. . . NUT (96906)	2	
		———— * ————		
-51	MS21042L3	. . . NUT (96906)	1	
-52	NAS43DD3-32	. . . SPACER (80205)	1	
-53	NAS517-3-7	. . . SCREW (80205)	1	
-54	847414-101	. . . BEARING, flap asymmetry detector	1	
-55	847416-101	. . . GUIDE, trailing edge flap asymmetry detector	1	
-56	NAS42DD5-24	. . . SPACER (80205)	4	
-57	847413-101	. . . CLAMP, flap asymmetry detector	1	
		Attaching Parts		
-58	NAS1096-3-10	. . . SCREW (80205)	1	
-59	MS21042L3	. . . NUT (96906)	1	
		———— * ————		
-60	847405-101	. . . SUPPORT, flap asymmetry detector	1	
-61	847404-101	. . . BOX, flap asymmetry detector	1	

A - Removed per AA.1F-104-OT-704A
B - Reqd per AA.1F-104-OT-704A

Figura e particolare	NDR	1 2 3 4 5 6 7 DENOMINAZIONE	Quant.	Codice applicab.
		LEADING AND TRAILING EDGE FLAP ACTUATORS		
16	760174-501	. ACTUATOR INSTL, te flap LH *(see fig. 2 for reqd)*	REF	6701-6720
	760174-101	. ACTUATOR INSTL, te flap LH *(see fig. 2 for reqd)*	REF	6721-
	760174-502	. ACTUATOR INSTL, te flap RH *(see fig. 2 for reqd)*	REF	6701-6720
	760174-102	. ACTUATOR INSTL, te flap RH *(see fig. 2 for reqd)*	REF	6721-
	760174-7	. . ACTUATOR ASSY, te flap LH	1	6701-6720
	760174-8	. . ACTUATOR ASSY, te flap RH	1	6701-6720
	760174-103	. . ACTUATOR ASSY, te flap	1	6721-
	MS25036-8	. . . TERMINAL (96906)	4	6701-6720
	MS25036-8	. . . TERMINAL (96906)	2	6721-
- 1	D1228-3	C. . . ACTUATOR, (B6) electro-mechanical rotary (A0809) (72121) (Lockheed spec dwg 669468-3) (see T.O. 8D1-8-196-4)	1	6701-6720
	D2199	D. . . ACTUATOR, (B6) electro-mechanical rotary (Modified from Electronic Specialty Co. P/N D1228-3 by T.O. 8D1-1-511 and P.T. AA.8-D1228-3-OT-101) (A0809) (72121) (Lockheed Spec dwg 671645-103) (D2202 is sutbl sub)	1	6701-6720
	D2202	. . . ACTUATOR, (B6) electro-mechanical rotary (A0809) (72121) (Lockheed spec dwg 671645-101) (sutbl sub for D2199) (see T.O. 8D1-8-196-4)	1	6721-
		Attaching Parts		
- 2	MS20008-82	. . BOLT (96906)	1	
- 3	MS20006-74	. . BOLT (96906)	1	
- 4	MS20006-84	. . BOLT (96906)	1	
- 5	MS20002C8	. . WASHER (96906)	1	
- 6	MS20002-8	. . WASHER (96906)	AR	
- 7	MS20002C6	. . WASHER (96906)	2	
- 8	MS20002-6	. . WASHER (96906)	AR	
- 9	762615	. . SHIM, flap actuator	1	
-10	762614	. . SHIM, flap actuator	2	
-11	EB080	. . NUT, 12 point high tension (72962)	1	
-12	EB064	. . NUT, 12 point high tension (72962)	2	
		*		
-13	761490L	. . FITTING ASSY, flap drive LH *(see fig. 5)*	1	
	761490R	. . FITTING ASSY, flap drive RH *(see fig. 5)*	1	
	786147-1	. SWITCH BOX INSTL, te flap actuator limit (NHA 849140-101)	1	6701-6720
	786147-101	. SWITCH BOX INSTL, te flap actuator limit (NHA 849140-101)	1	6721-6790; 6831-
	—	E. SWITCH BOX INSTL, te flap actuator limit (NHA 849140-101)	1	6791-6830
-14	D879-5	C. . SWITCH BOX, (E22) actuator limit (A0809) (72121) (Lockheed spec dwg 669292-7) (see T.O. 8A1-7-3-4)	1	6701-6720
	D2209	D. . H-BOX, (E22) te flap (A0809) (72121) (Lockheed spec dwg 671646-103) (D2213 is sutbl sub) (see T.O. 8A1-7-3-4)	1	6701-6720
	D2213	. . H-BOX, (E22) te flap (A0809) (72121) (Lockheed spec dwg 671646-101) (sutbl sub for D2209) (see T.O. 8A1-7-3-4)	1	6721-
		Attaching Parts		
-14A	AN174H27A	. . BOLT (88044)	1	
-15	AN174H27A	. . BOLT (88044)	1	
-16	NAS623-3-18	. . SCREW (80205)	1	
-17	LS881-10	. . WASHER, plain (36659)	AR	
-18	AN960-416L	. . WASHER (88044)	2	
-19	AN960D416	. . WASHER (88044)	2	
-20	727325-1	. . SHIM, flap drive control	1	
-20A	727325-1	. . SHIM, flap drive control	2	
-21	MS21042L4	. . NUT (96906)	1	
		*		
-22	B1671-36	. . SHAFT, flexible drive (A0809) (72121) (Lockheed spec dwg 669293-113)	1	
-23	B1671-31	. . SHAFT, flexible drive (A0809) (72121) (Lockheed spec dwg 669293-29)	1	
-24	SA9517	. . . PIN, flexible drive shaft (A0809) (72121) (Lockheed spec dwg 669293-123)	1	
-24A	SA8840	. . . WASHER, flexible drive shaft (A0809) (72121) (Lockheed spec dwg 669293-111)	2	
-24B	SA8839	. . . END, flexible drive shaft (A0809) (72121) (Lockneed spec dwg 669293-109)	1	

Wing Electrical

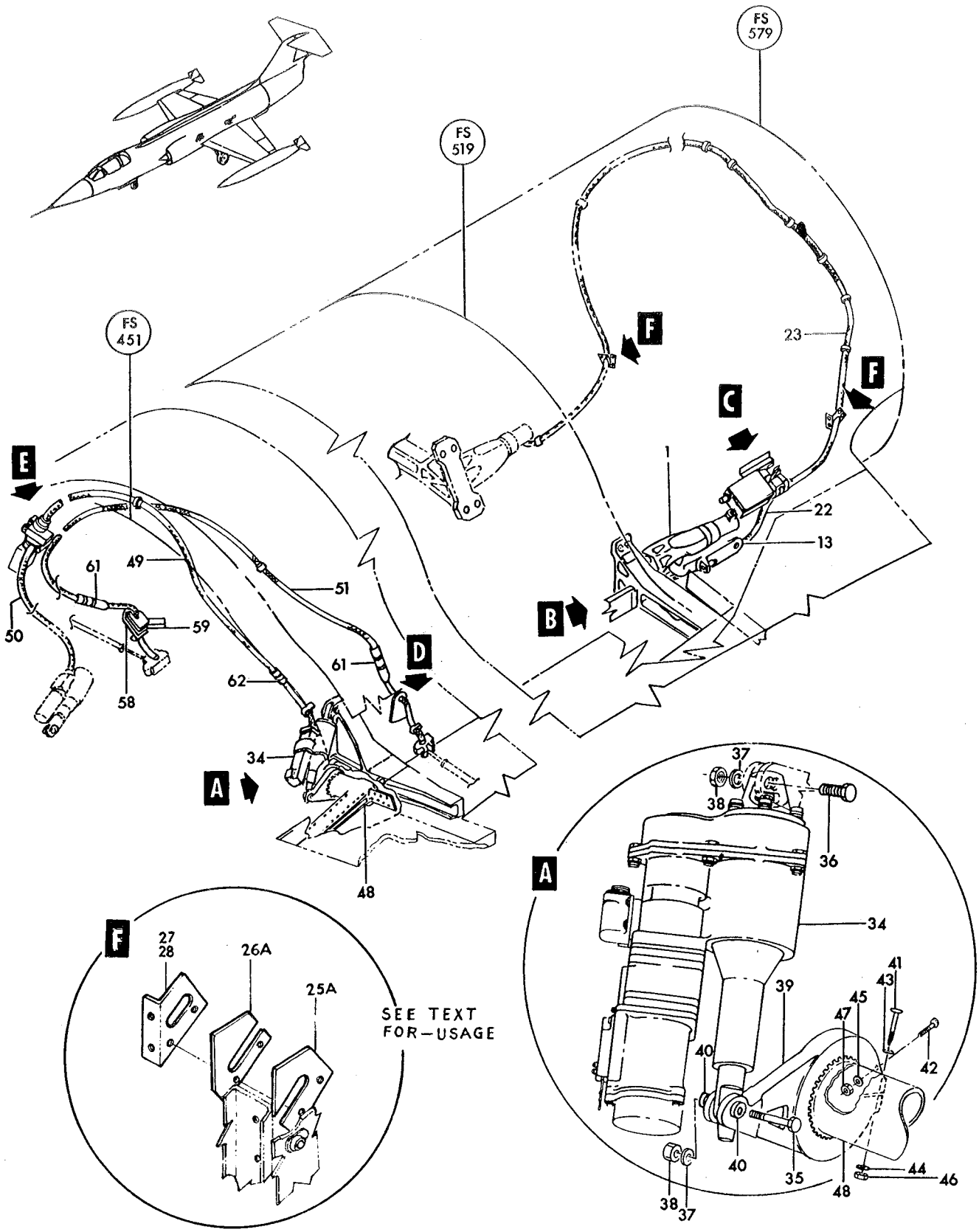

Figure 16—Leading and Trailing Edge Flap Actuators (Sheet 1 of 2)

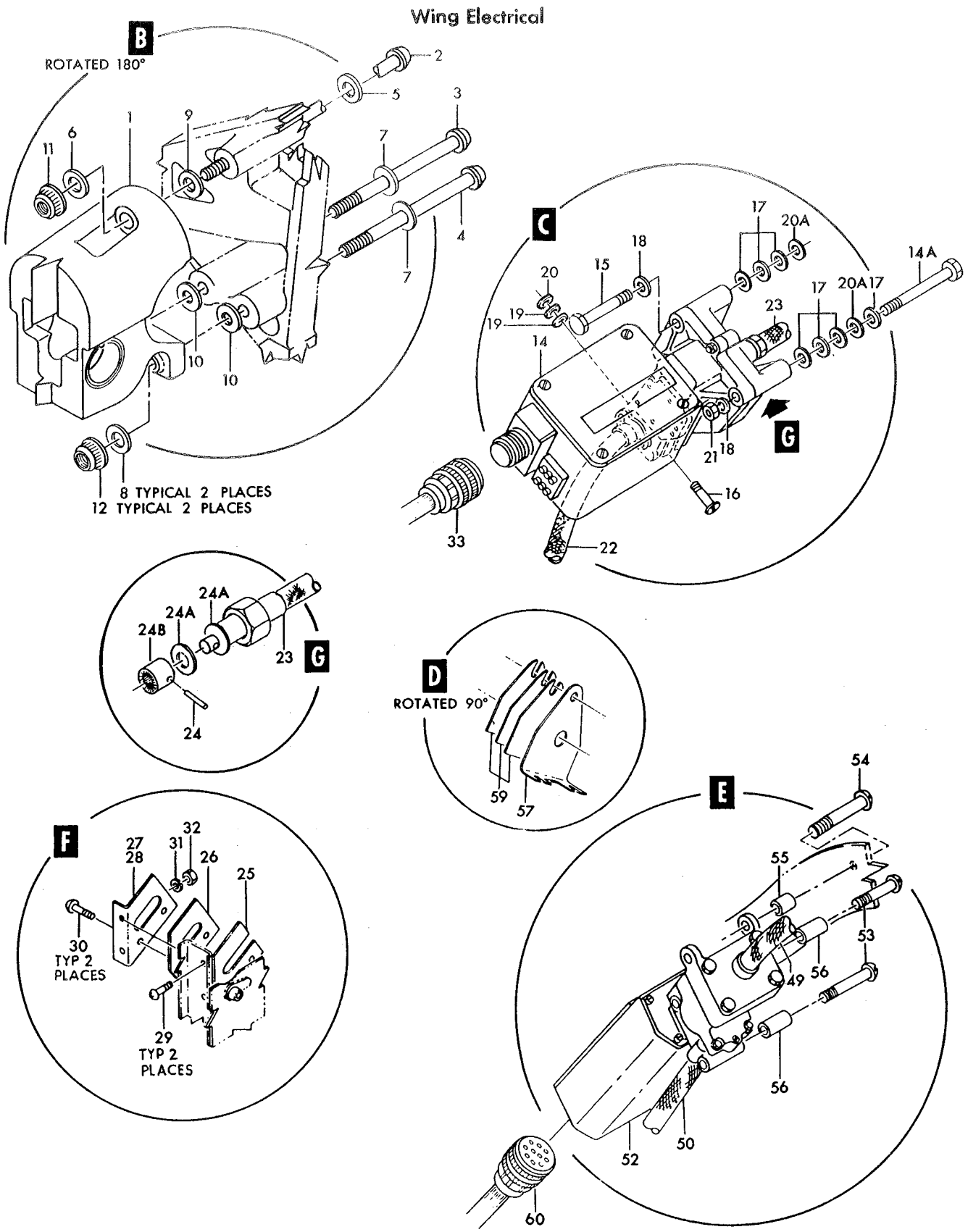

Figure 16—Leading and Trailing Edge Flap Actuators (Sheet 2 of 2)

Figura e particolare	NDR	1 2 3 4 5 6 7 DENOMINAZIONE	Quant.	Codice applicab.
16-25	763125	. . GASKET, flexible shaft outer	1	
-25A	763125	. . GASKET, flexible shaft outer	1	6701-6790; 6831-
	852245-101	E. . GASKET, flexible shaft inner	1	6791-6830
-26	763124	. . GASKET, flexible shaft inner	1	
-26A	763124	. . GASKET, flexible shaft inner	1	6701-6790; 6831-
	852244-101	E. . GASKET, flexible shaft outer	1	6791-6830
-27	762807-8L	. . PLATE, LH	1	
-28	762807-8R	. . PLATE, RH	1	6701-6790; 6831-
	8542243-101	E. . PLATE, RH	1	6701-6790; 6831-
		Attaching Parts		
-29	NAS623-3-2	F. . SCREW (80205)	2	
-30	NAS623-3-4	F. . SCREW (80205)	2	
-31	AN960D10	F. . WASHER (88044)	2	
-32	MS21042L3	F. . NUT (96906)	2	
	849780-101	. HARNESS ASSY, P-142 plug to LH wing fillet *(see fig. 194 for reqd)*	REF	
-33	MS25183-18-1S	. . CONNECTOR, (P122) plug (te flap h box) (96906)	1	
	786355-101	. ACTUATOR INSTL, le flap LH *(see fig. 2 for reqd)*	REF	6701-6720
	786355-103	. ACTUATOR INSTL, le flap LH *(see fig. 2 for reqd)*	REF	6721-
	786355-102	. ACTUATOR INSTL, le flap RH *(see fig. 2 for reqd)*	REF	6701-6720
	786355-104	. ACTUATOR INSTL, le flap RH *(see fig. 2 for reqd)*	REF	6721-
-34	D1227-3	A. . ACTUATOR ASSY, (B15), le flap LH (A0809) (72121) (Lockheed spec dwg 669469-3) (see T.O. 8A1-8-39-4)	1	6701-6720
	D2198-1	B. . ACTUATOR, (B15) electro-mechanical linear (LH) (Modified from Electronic Specialty Co. P/N D1227-3 by T.O. 8A1-1-505 and P.T. AA.8-D1227-OT-101) (A0809) (72121) (Lockheed spec dwg 671649-103) (D2201-1 is sutbl sub) (see T.O. 8A1-8-39-4)	1	6701-6720
	D2201-1	. . ACTUATOR ASSY, (B15) electro-mechanical linear (LH) (A0809) (72121) (Lockheed spec dwg 671649-101) (subtl sub for D2198-1) (see T.O. A1-8-39-4)	1	6721-
	D1227-4	A. . ACTUATOR ASSY, (B19) le flap (RH) (A0809) (72121) (Lockheed spec dwg 669469-4) (see T.O. 8A1-8-39-4)	1	6701-6720
	D2198-2	B. . ACTUATOR, (B19) electro-mechanical linear (RH) (Modified from Electronic Specialty Co. P/N D1227-4 by T.O. 8A1-1-505 and P.T. AA.8-D1227-OT-101) (A0809) (72121) (Lockheed spec dwg 671649-104) (D2201-2 is subtl sub) (see T.O. 8A1-8-39-4)	1	6701-6720
	D2201-2	. . ACTUATOR ASSY, (B19) electronic-mechanical linear (RH) (A0809) (72121) (Lockheed spec dwg 671649-102) (sutbl sub for D2198-2) (see T.O. 8A1-8-39-4)	1	6721-
-35	NAS1108-24D	. . BOLT (80205)	1	
-36	NAS1108-28D	. . BOLT (80205)	1	
-37	AN960D816	. . WASHER (88044)	2	
-38	AN320-8	. . NUT (88044)	2	
	MS24665-283	. . COTTER PIN (96906)	2	
	761248-101	. . CRANK ASSY, le flap	1	
-39	761248-103	. . . CRANK, le flap	1	
-40	LS3859R8-15	. . . BUSHING, plain (36659)	2	
-41	MS20005-34	. . BOLT (96906)	1	
-42	NAS1104-20	. . BOLT (80205)	1	
-43	MS20002C5	. . WASHER (96906)	1	
-44	MS20002-5	. . WASHER (96906)	1	
-45	AN960-416	. . WASHER (88044)	1	
-46	EB054	. . NUT, high tension (72962)	1	
-47	NAS1291-4	. . NUT (80205)	1	
-48	779475-1	. FITTING, le flap torque tube LH *(see fig. 4 for reqd)*	REF	
	779475-2	. FITTING, le flap torque tube RH *(see fig. 4 for reqd)*	REF	
	760173-101	. SWITCH BOX INSTL, le flap actuator limit (NHA 849140-101)	1	6701-6720
	760173-103	. SWITCH BOX INSTL, le flap actuator limit (NHA 849140-101)	1	6721-
-49	B1671-27	. . SHAFT, flexible drive (A0809) (72121) (Lockheed spec dwg 669293-21)	1	
-50	B1671-28	. . SHAFT, flexible drive (A0809) (72121) (Lockheed spec dwg 669293-23)	1	6701-6720; 6805-

Figura e particolare	NDR	1 2 3 4 5 6 7	DENOMINAZIONE	Quant.	Codice applicab.
16	B1671-38	. .	SHAFT, flexible drive (72121) (Lockheed spec dwg 669293-125) . . .	1	6721-6804
-51	PS39747-2	. .	SHAFT ASSY, flexible drive (A0076) (70210) (Lockheed spec dwg 669306-5) (flap latch actuator)	1	
-52	D888-3	A. .	SWITCH BOX, actuator limit (A0809) (72121) (Lockheed spec dwg 669291-5) (see T.O. 8A1-7-3-4)	1	6701-6720
	D2208	B. .	H-BOX, leading edge wing flap (A0809) (72121) (Lockheed spec dwg 671648-103) (D2212 is sutbl sub) (see T.O. 8A1-7-3-4)	1	6701-6720
	D2212	. .	H-BOX, leading edge wing flap (A0809) (72121) (Lockheed spec dwg 671648-101) (sutbl sub for D2208) (see T.O. 8A1-7-3-4)	1	6721-
			Attaching Parts		
-53	LS5075-3A43	. .	SCREW (36659)	2	
-54	NAS623-3-12	. .	SCREW (80205)	1	
-55	LS607-10	. .	SPACER, phenolic (36659)	1	
-56	LS607-30	. .	SPACER, phenolic (36659)	2	
-57	760173-6L	. .	PLATE, LH	1	
-58	760173-6R	. .	PLATE, RH	1	
-59	727095-1	. .	GASKET, flexible shaft	6	
	849566-101	.	HARNESS ASSY, le flap h box *(see fig. 194 for reqd)*	REF	
-60	MS25183-18-1S	. .	CONNECTOR, (P122) plug (le flap h box) (96906)	1	
	760173-19	.	TUBE INSTL, le flap actuator limit (NHA 849143-107)	1	
	760173-20	.	TUBE IBSTL, le flap actuator limit (NHA 849143-109)	1	
-61	760173-16	. .	TUBE, le flap actuator limit	1	
-62	760173-17	. .	TUBE, le flap actuator limit (reqd on 760173-19)	1	
	MS21103-16	. .	CLAMP (88044) (4 reqd on 760173-19)	6	
			Attaching Parts		
	NAS623-3-8	. .	SCREW (80205)	2	
	NAS623-3-2	. .	SCREW (80205)	2	
	LS607-8	. .	SPACER (36659)	2	
	AN960D10	. .	WASHER (88044)	2	
	MS21042L3	. .	NUT (96906)	2	

A - Removed per AA.1F-104-OT-686B
B - Reqd per AA.1F-104-OT-686B
C - Removed per AA.1F-104-OT-685B
D - Reqd per AA.1F-104-OT-685B
E - Only per partial incorporation of SPU system
F - All parts marked with letter F serve also to install partial incorporation of SPU system

Figura e particolare	NDR	DENOMINAZIONE 1 2 3 4 5 6 7	Quant.	Codice applicab.
		WING ELECTRICAL		
17	786424-3	PLUG AND COVER AND ANGLE INSTL, pylon *(see fig. 3 for reqd)*	REF	
	786424-4	PLUG AND COVER AND ANGLE INSTL, pylon *(see fig. 3 for reqd)*	REF	
- 1	MS21042L4	NUT (96906)	2	
- 2	791228-1	SPACER, pylon electrical disc.	2	
- 3	791227-1	MOUNT, pylon electrical disc.	1	
	791227-2	MOUNT, pylon electrical disc.	1	
- 4	NAS1204-10	SCREW (80205)	1	
- 5	NAS1204-16	SCREW (80205)	1	
	849917-101	ELECTRICAL INSTL, LH wing *(see fig. 2 for reqd)*	REF	
	849918-101	ELECTRICAL INSTL, RH wing *(see fig. 2 for reqd)*	REF	
	851004-101	LIGHT INSTL, wing tip formation LH *(see fig. 198)*	1	
	851004-102	LIGHT INSTL, wing tip formation RH *(see fig. 198)*	1	
- 6	849524-101	HARNESS ASSY, LH wing pylon disc. to P-5 disc.	1	
	849512-101	HARNESS ASSY, RH wing pylon disc. to P-8 disc.	1	
- 7	MS25183-16S1S	CONNECTOR, (P54) plug (aileron servo disc.) (96906)	1	
- 8	MS3112E10-6S	CONNECTOR, (J47) receptacle (aileron servo disc.) (96906)	1	
- 9	1-670-1	CONNECTOR, (P92) plug (wing fillet) (95712)	1	
	791278-1	COVER ASSY, pylon electrical disc.	1	
		Attaching Parts		
	NAS514P440-10	SCREW (80205)	1	
	NAS514P440-12	SCREW (80205)	2	
	AN936D4	WASHER (88044)	3	
		*		
-10	791457-101	CONNECTOR, (J175) receptacle (pylon P-12 and P-11 disc.)	1	
-11	791278-3	BLOCK, pylon electrical disc.	1	
-12	CA06KE28-21P	CONNECTOR, (P124) plug (P-5 and P-8 disc.) (71468)	1	
	849527-101	HARNESS ASSY, LH wing P-152 recp to P-162 disc.	1	6701-6765
	852120-101	HARNESS ASSY, LH wing P-152 recp to P-162 disc.	1	6766-
	849515-101	HARNESS ASSY, RH wing P-153 recp to P-161 disc.	1	6701-6765
	852121-101	HARNESS ASSY, RH wing P-153 recp to P-161 disc.	1	6766-
-13	791457-1	CONNECTOR, (J175) recp (P-152 and P-153 disc.)	1	
	849525-101	HARNESS ASSY, LH wing P-29 to P-6 disc.	1	
	849513-101	HARNESS ASSY, RH wing P-30 to P-9 disc.	1	
-14	1-670-1	CONNECTOR, (P92) plug (wing fillet disc.) (95712)	1	
-15	DM6502-7S244	CONNECTOR, (P155) plug (P-133 and P-134 disc.) (17419)	1	
-16	846773-101	CONNECTOR, (J293) receptacle (P-29 and P-30 disc.)	1	
-17	CA06KE20-27P	CONNECTOR, (P453) plug (P-4 and P-7 disc.) (71468)	1	
-18	CA06KE36-10P	CONNECTOR, (P442) plug (P-161 and P-162 disc.) (71468)	1	
-19	CA06KE28-21P	CONNECTOR, (P124) plug (P-6 and P-9 disc.) (71468)	1	
-20	NAS602-12	SCREW (grd stud) (80205)	1	
	AN936A8	WASHER (grd stud) (88044)	1	
	MS35337-42	WASHER (grd stud) (96906)	1	
	AN340-8	NUT (grd stud) (88044)	1	
	AN960-8	WASHER (grd stud (88044)	1	
	MS21042L08	NUT (grd stud) (80205)	1	
-21	NAS1096-3-16	BOLT (grd stud) (80205)	1	
	AN936A10	WASHER (grd stud) (88044)	1	
	MS35337-43	WASHER (grd stud) (96906)	1	
	AN345-10	NUT (grd stud) (88044)	1	
	AN960-10	WASHER (grd stud) (88044)	1	
	MS21042L3	NUT (grd stud) (96906)	1	
-22	NAS514P1032-12	SCREW (grd stud) (80205)	1	
	MS35337-43	WASHER (grd stud) (96906)	1	
	AN345-10	NUT (grd stud) (88044)	1	
	AN960-10	WASHER (grd stud) (88044)	1	
	MS21042L3	NUT (grd stud) (88044)	1	
-22A	NAS600-6	SCREW (80205)	3	
-22B	MS35265-6	SCREW (96906)	1	
	MS21042L04	NUT (96906)	4	

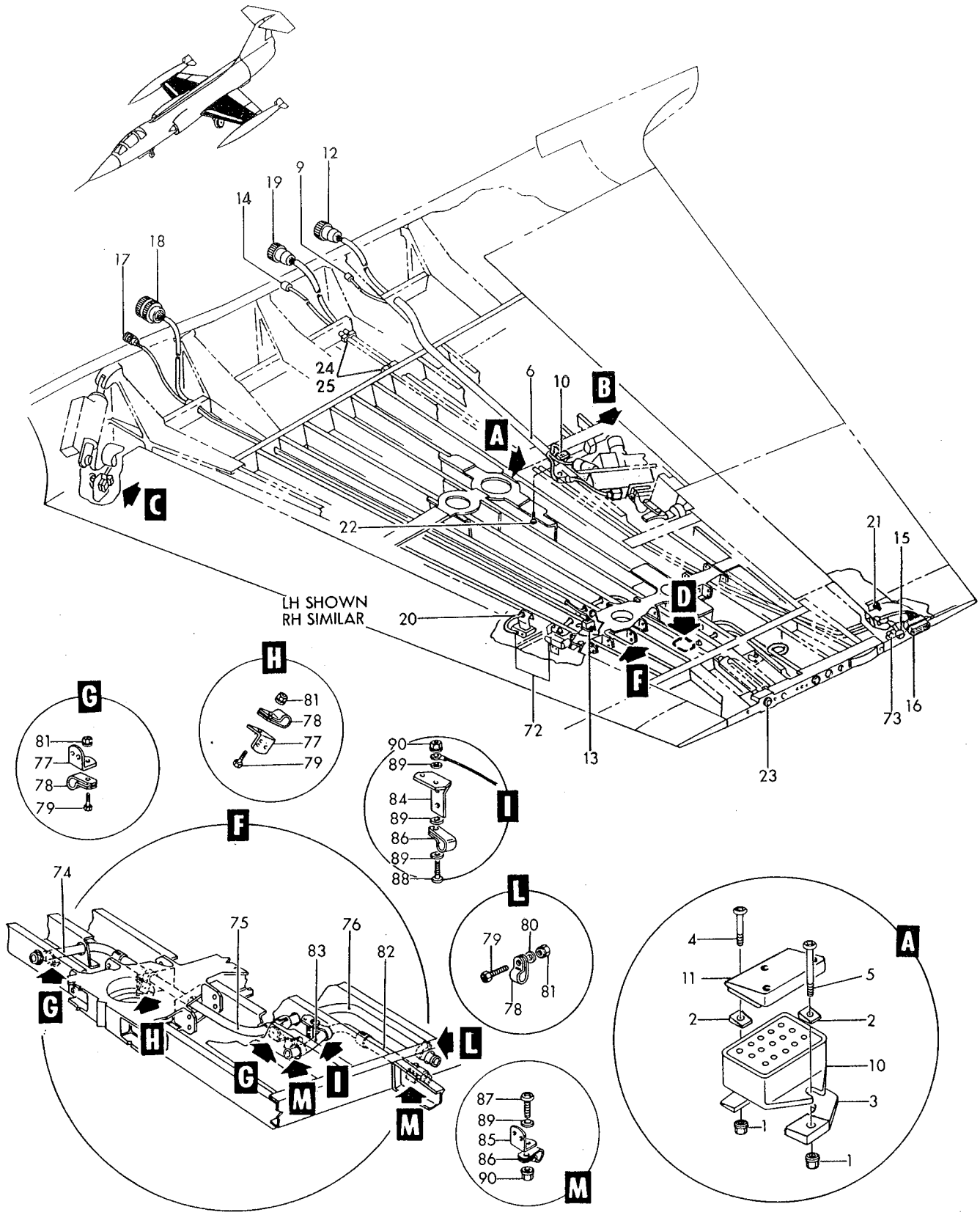

Figure 17–Wing Electrical (Sheet 1 of 4)

Wing Electrical

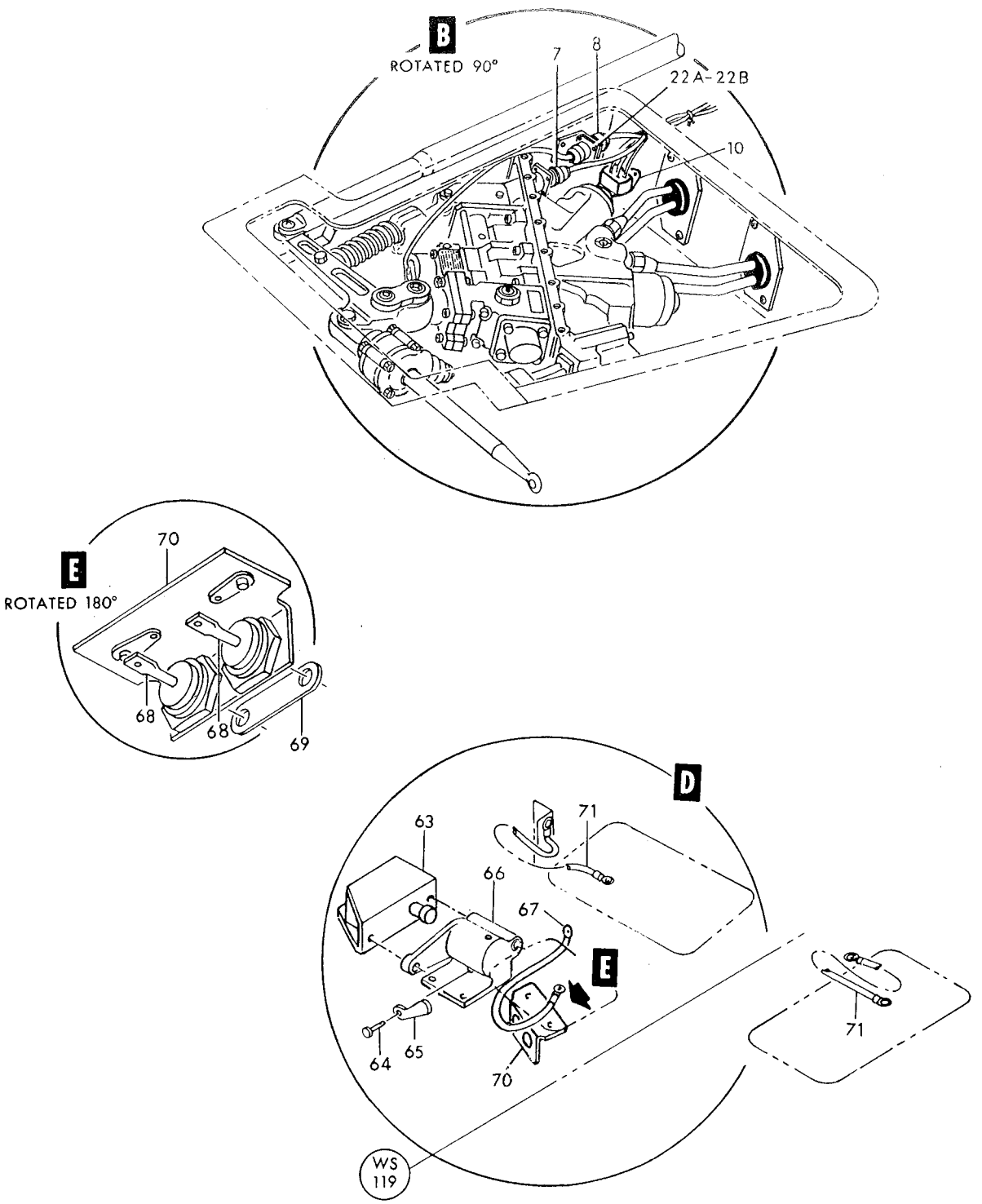

Figure 17—Wing Electrical (Sheet 2 of 4)

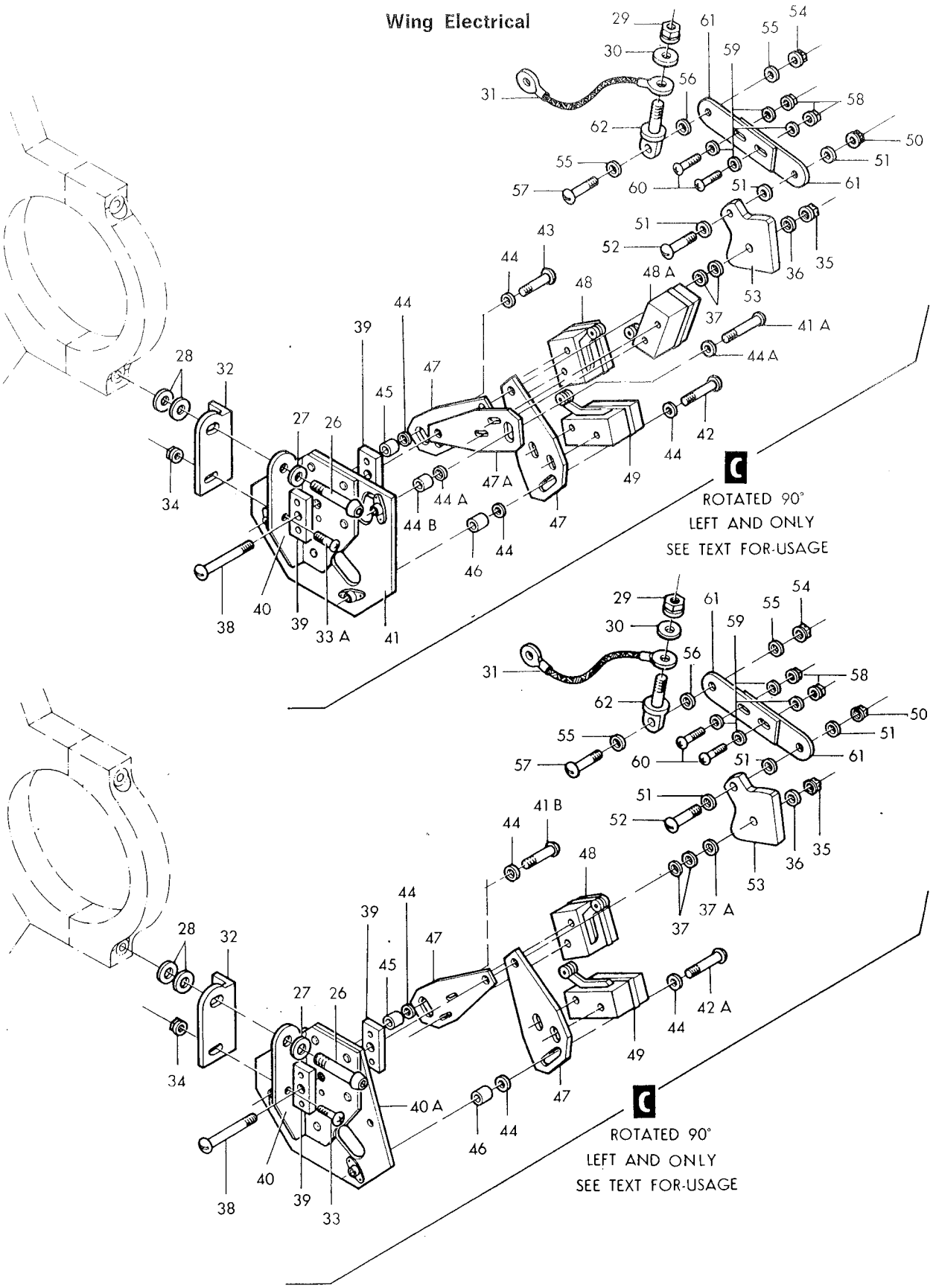

Figure 17-Wing Electrical (Sheet 3 of 4)

Wing Electrical

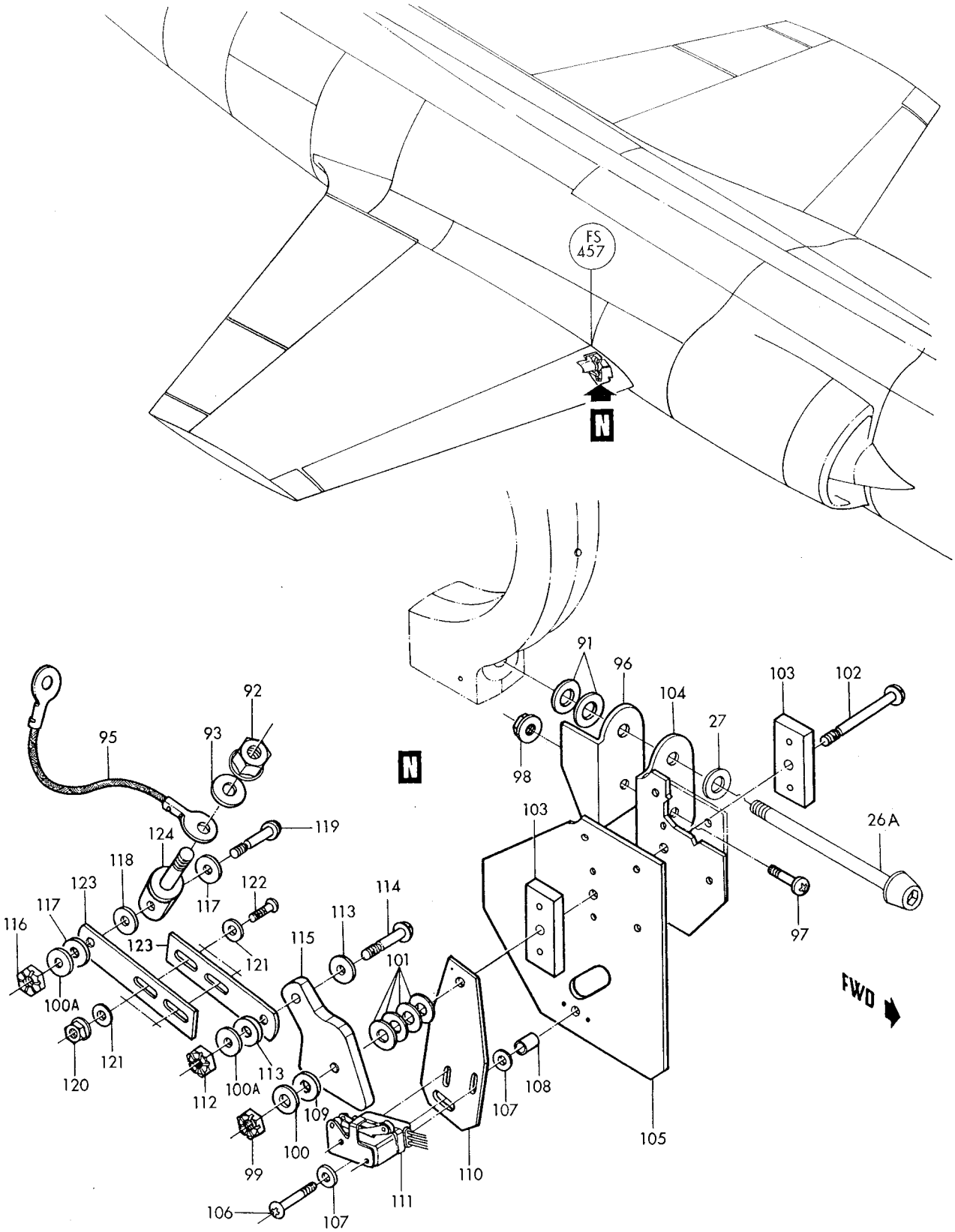

Figure 17–Wing Electrical (Sheet 4 of 4)

Figura e particolare	NDR	1	2	3	4	5	6	7	DENOMINAZIONE	Quant.	Codice applicab.
17-23	762330								EJECTOR ASSY, (E31) tip tank *(see fig. 18 for reqd)*	REF	
	784076-101								CONDUIT INSTL, wing LH *(see fig. 3 for reqd)*	REF	6701-6850
	FL3027-101								CONDUIT INSTL, wing LH (A0019) *(see fig. 3 for reqd)*	REF	6851-
	784076-102								CONDUIT INSTL, wing RH *(see fig. 3 for reqd)*	REF	6701-6850
	FL3027-102								CONDUIT INSTL, wing RH (A0019) *(see fig. 3 for reqd)*	REF	6851-
-24	784076-3								CLAMP, wing conduit	2	
									Attaching Parts		
	NAS1203-17								SCREW (80205)	1	
	NAS43DD3-20								SPACER (80205)	1	
	MS21042L3								NUT (96906)	1	
-25	762844								CLAMPBLOCK ASSY, wing conduit	2	
-26	MS20005H38								BOLT (96906) *(see fig. 6 for reqd)*	REF	
-26A	MS20005H34								BOLT (96906) *(see fig. 6 for reqd)*	REF	
-27	MS20002C5								WASHER (96906) *(see fig. 6 for reqd)*	REF	
	761994-501	C.							SWITCH INSTL, le flap position LH only *(see fig. 2 for reqd)*	REF	6701-6765
	761994-101	D.							SWITCH INSTL, le flap position LH only *(see fig. 2 for reqd)*	REF	6766-
-28	AN960D516								WASHER (88044)	2	
-29	MS21042L4								NUT (96906)	1	
-30	AN960-416L								WASHER (88044)	1	
-31	MS25083-2BC10								JUMPER (96906)	1	
	773906-501	C.							SWITCH ASSY, le flap position (Modified and reidentified to 852117-103 per AA.1F-104-OT-704A)	1	6701-6765
	852117-103	D.							SWITCH ASSY, le flap position (Supersedes 773906-501 per AA.1F-104-OT-704A)	1	6766-
-32	762122								CLIP, le flap position	1	
									Attaching Parts		
-33	NAS221-8	C.							SCREW (80205)	1	6701-6765
-33A	MS27039-1-08	D.							SCREW (96906)	1	
-34	MS21042L3								NUT (96906)	1	
	MS24665-151								COTTER PIN (96906)	1	
-35	AN320-3								NUT (88044)	1	
-36	NAS549L10								WASHER (80205)	1	
-37	LS881-4								WASHER (36659)	2	
-37A	LS881-4	C.							WASHER (36659)	1	6701-6765
-38	AN23-22								BOLT (88044)	1	
	773907-1	C.							BRACKET ASSY, le flap position switch	1	6701-6765
	761996-101	D.							BRACKET ASSY, le flap position switch	1	
-39	762121								SPACER, le flap position switch	2	
-40	761995								BRACKET, le flap position switch	1	
-40A	773908-1	C.							PLATE, le flap position switch	1	6701-6765
-41	761998-103	D.							PLATE, le flap position switch	1	
-41A	NAS602-10P	D.							SCREW (80205)	1	
-41B	AN515-8R12	C.							SCREW (88044)	1	6701-6765
-42	NAS602-12P	D.							SCREW (80205)	1	
-42A	AN515-8R14	C.							SCREW (88044)	1	6701-6765
-43	NAS602-12P	D.							SCREW (80205)	1	
-44	AN960D8								WASHER (88044)	4	
-44A	AN960D8	D.							WASHER (88044)	2	
-44B	NAS43DD3-10	D.							SPACER (80205)	1	
-45	NAS43DD3-14								SPACER (80205)	1	
-46	NAS43DD3-18								SPACER (80205)	1	
-47	762014								PLATE, le flap position switch	2	
-47A	762014	D.							PLATE, le flap position switch	1	
	852118-101	D.							HARNESS ASSY, up le flap position	1	
-48	9177	D.							ADAPTER, (S98) switch actuator (82227) (Lockheed spec dwg 613355-6)	1	
	787572-1								HARNESS ASSY, landing le flap position	1	
-48A	9177								ADAPTER, (S98) switch actuator (82227) (Lockheed spec dwg 613355-6)	1	
	AN515-4R20	C.							SCREW (88044)	2	6701-6765
	NAS600-20P	D.							SCREW (80205)	2	

Figura e particolare	NDR	1 2 3 4 5 6 7 DENOMINAZIONE	Quant.	Codice applicab.
17	AN960D4	WASHER (88044)	2	
	MS21042L04	NUT (96906)	2	
		*		
	787571-1	HARNESS ASSY, take-off le flap position	1	
-49	9186	ADAPTER, (S99) switch actuator (87227) (Lockheed spec dwg 613355-7)	1	
		Attaching Parts		
	AN515-4R20	C. SCREW (88044)	2	6701-6765
	NAS600-20P	D. SCREW (80205)	2	
	AN960D4	WASHER (88044)	2	
	MS21042L04	WASHER (96906)	2	
		*		
	MS24665-151	COTTER PIN (96906)	1	
-50	AN320-3	NUT (88044)	1	
-51	NAS549L10	WASHER (80205)	3	
-52	AN23-11	BOLT (88044)	1	
-53	761997	CAM, le flap position switch	1	
	MS24665-151	COTTER PIN (96906)	1	
-54	AN320-3	NUT (88044)	1	
-55	NAS549L10	WASHER (80205)	2	
-56	AN960D10	WASHER (88044)	1	
-57	AN23-10	BOLT (88044)	1	
	761999	LINK ASSY, le flap position switch	1	
-58	MS21042L06	NUT (96906)	2	
-59	AN960D6	WASHER (88044)	4	
-60	AN515-6R8	SCREW (88044)	2	
-61	761999-3	LINK, le flap position switch	2	
-62	AN43B5A	BOLT, eye (88044)	1	
	851025-101	SWITCH INSTL, tip tank ejector safety LH *(see fig. 3 for reqd)*	REF	
	851025-102	SWITCH INSTL, tip tank ejector safety RH *(see fig. 3 for reqd)*	REF	
	851025-103	SWITCH ASSY, tip tank ejector safety LH	1	
	851025-104	SWITCH ASSY, tip tank ejector safety RH	1	
		Attaching Parts		
	NAS1203-5	SCREW (80205)	2	
		*		
-63	21334-1	SWITCH, (S64) (S65) tip/pylon safety plunger actuated (82647) (Lockheed spec dwg 613682-1)	1	
		Attaching Parts		
	NAS601-26	A. SCREW (80205)	1	
	NAS601-6	A. SCREW (80205)	1	
	MS35337A1	WASHER (96906)	2	
		*		
-64	MS20392-1C21	PIN (96906)	1	
	MS24665-130	COTTER PIN (96906)	1	
-65	766095-1	ARM, tip tank ejector safety switch	1	
-66	766093-1	FITTING, safety switch tip tank ejector LH	1	
	766093-2	FITTING, safety switch tip tank ejector RH	1	
-67	MS25083-2AB6	JUMPER (96906)	1	
		Attaching Parts		
	NAS1203-3	SCREW (80205)	1	
	NAS1096-1-6	B. SCREW (80205)	1	
	AN960D416	WASHER (88044)	1	
	MS35333-38	B. WASHER (96906)	1	
	MS21042L3	NUT (96906)	1	
	MS21042L06	B. NUT (96906)	1	
		*		
	849777-101	HARNESS ASSY, LH tip tank diode rectifier	1	
	849778-101	HARNESS ASSY, RH tip tank diode rectifier	1	
	774305-1	RECTIFIER ASSY, (CR7) tip tank jettison	1	
		Attaching Parts		
	NAS1203-3	SCREW (80205)	2	
		*		

Figura e particolare	NDR	1	2	3	4	5	6	7	DENOMINAZIONE	Quant.	Codice applicab.
17-68	1N250								RECTIFIER, (CR2) diode blocking (81349) (Lockheed spec dwg 613580-1) (spares replacement use 1N250B) intchg wth CK776)	2	
	CK776								RECTIFIER, (CR2) diode blocking (49956) (Lockheed spec dwg 613580-1) (spares replacement use 1N250B) (intchg wth 1N250)	REF	
	1N250B								RECTIFIER, (CR2) diode blocking (04713) (spares replacement for 1N250 and CK776)	REF	
									Attaching Parts		
	AN960-416L								WASHER (88044)	1	
	MS21042L4								NUT (96906)	1	
-69	774307-1								BUS BAR, rectifier	1	
-70	774306-1								ANGLE ASSY, rectifier	1	
	848662-101								GUARD, LH wing safety switch rectifier	1	
	848662-102								GUARD, RH wing safety switch rectifier	1	
-71	MS25083-2BB6								JUMPER (96906)	2	
									Attaching Parts		
	NAS1203-3								SCREW (80205)	2	
	AN960D416								WASHER (88044)	2	
	MS21042L3								NUT (96906)	2	
-72	MS25011-1								SWITCH, (S59) (le flap latch limit) (96906) *(see fig. 9 for reqd)*	REF	
	782563-1								BRACKET ASSY, wing tip electrical plug *(see fig. 5 for reqd)*	REF	
	782563-2								BRACKET ASSY, wing tip electrical plug *(see fig. 5 for reqd)*	REF	
-73	AN520-10R12								SCREW (grd stud) (88044)	1	
	AN936A10								WASHER (grd stud) (88044)	1	
	AN935-10L								WASHER (grd stud) (88044)	1	
	AN345-10								NUT (grd stud) (88044)	1	
	AN960D10								WASHER (grd stud) (88044)	1	
	MS21042L3								NUT (grd stud) (96906)	1	
	849208-101								CONDUIT INST, wing tip wiring LH *(see fig. 3 for reqd)*	REF	
	849208-102								CONDUIT INST, wing tip wiring RH *(see fig. 3 for reqd)*	REF	
-74	763146-101								CONDUIT, tip tank ejector wiring	1	
-75	763146-103								CONDUIT, tip tank ejector wiring	1	
-76	763146-105								CONDUIT, tip tank ejector wiring	1	
-77	TA102-1-6-6								BRACKET (84971)	3	
-78	MS21103-8								CLAMP (96906)	4	
-79	NAS1096-3-8								SCREW (80205)	4	
-80	AN960D10								WASHER (88044)	1	
-81	MS21042L3								NUT (96906)	4	
	849291-101								CONDUIT INST, tip tank ejector wiring LH *(see fig. 3 for reqd)*	REF	
	849291-102								CONDUIT INST, tip tank ejector wiring RH *(see fig. 3 for reqd)*	REF	
-82	763146-115								CONDUIT, tip tank ejector wiring	1	
-83	763146-117								CONDUIT, tip tank ejector wiring LH	1	
	763146-119								CONDUIT, tip tank ejector wiring RH	1	
-84	849287-101								BRACKET	1	
-85	TA102-1-6-6								BRACKET (84971)	2	
-86	MS21103-8								CLAMP (96906)	3	
-87	NAS603-6								SCREW (80205)	2	
-88	NAS603-10								SCREW (80205)	1	
-89	AN960D10								WASHER (88044)	5	
-90	MS21042L3								NUT (96096)	3	
	851591-103	D.							SWITCH INSTL, le flap position RH only *(see fig. 2 for reqd)*	REF	
-91	AN960D516	D.							WASHER (88044)	2	
-92	MS21042L4	D.							NUT (96906)	1	
-93	AN960-416L	D.							WASHER (88044)	1	
-95	MS25083-2BC10	D.							JUMPER (96906)	1	
	851588-105	D.							SWITCH ASSY, le flap position	1	
-96	851586-101	D.							CLIP, le flap position	1	
									Attaching Parts		
-97	NAS221-8	D.							SCREW (80205)	1	

Figura e particolare	NDR	1 2 3 4 5 6 7	DENOMINAZIONE	Quant.	Codice applicab.
17-98	MS21042L3	D.	NUT (96906)	1	
			*		
	MS24665-130	D.	COTTER PIN (96906)	1	
-99	AN320-3	D.	NUT (88044)	1	
-100	NAS549L10	D.	WASHER (80205)	1	
-100A	AN960-10L	D.	WASHER (88044)	2	6766-
-101	LS881-4	D.	WASHER (36659)	4	
-102	AN23-22	D.	BOLT (88044)	1	
	851587-103	D.	BRACKET ASSY, le flap position switch	1	
-103	762121	D.	. SPACER, le flap position switch	2	
-104	851585-103	D.	. BRACKET, le flap position switch	1	
-105	761998-105	D.	. PLATE, le flap position switch	1	
-106	NAS602-10P	D.	SCREW (80205)	1	
-107	AN960D8	D.	WASHER (88044)	2	
-108	NAS43DD3-10	D.	SPACER (80205)	1	
-109	LS881-4	D.	WASHER (36659)	1	
-110	849866-101	D.	PLATE, le flap position switch	1	
	852119-101	D.	HARNESS ASSY, up le flap position	1	
-111	9176	D.	. SWITCH, (S56) SPDT roller actuated (82227) (Lockheed spec dwg 613355-5)	1	
			Attaching Parts		
	NAS600-20P	D.	SCREW (80205)	2	
	AN960D4	D.	WASHER (88044)	2	
	MS21042L04	D.	NUT (96906)	2	
			*		
	MS24665-130	D.	COTTER PIN (96906)	1	
-112	AN320-3	D.	NUT (88044)	1	
-113	NAS549L10	D.	WASHER (80205)	2	
-114	AN23-11	D.	BOLT (88044)	1	
-115	761997	D.	CAM, le flap position switch	1	
	MS24665-130	D.	COTTER PIN (96906)	1	
-116	AN320-3	D.	NUT (88044)	1	
-117	NAS549L10	D.	WASHER (80205)	2	
-118	AN960D10	D.	WASHER (88044)	1	
-119	AN23-10	D.	BOLT (88044)	1	
	761999	D.	LINK ASSY, le flap position switch	1	
-120	MS21042L06	D.	. NUT (96906)	2	
-121	AN960D6	D.	. WASHER (88044)	4	
-122	AN515-6R8	D.	. SCREW (88044)	2	
-123	761999-3	D.	. LINK, le flap position switch	2	
-124	AN43B5A	D.	. BOLT, eye (88044)	1	

A - Modified per AA-1F-104-OT-768A
B - Reqd per AA.1F-104-OT-768A
C - Removed per AA.1F-104-OT-704A
D - Reqd per AA.1F-104-OT-704A

Figura e particolare	NDR	1	2	3	4	5	6	7	DENOMINAZIONE	Quant.	Codice applicab.
									WING TIP EQUIPMENT		
18	783187-1	A.							EQUIPMENT INSTL, wing tip LH *(see fig. 3 for reqd)*	REF	6701-6765
	783187-101	B.							EQUIPMENT INSTL, wing tip LH *(see fig. 3 for reqd)*	REF	6766-
	783187-2	A.							EQUIPMENT INSTL, wing tip RH *(see fig. 3 for reqd)*	REF	6701-6765
	783187-102	B.							EQUIPMENT INSTL, wing tip RH *(see fig. 3 for reqd)*	REF	6766-
- 1	AN316-4R		.	.					NUT (88044)	1	
- 2	762110		.	.					CAP, tip tank latch indicator	1	
- 3	776849-1		.	.					INDICATOR, tip tank latch rigging	1	
									Attaching Parts		
	NAS1203-3		.	.					SCREW (80205)	1	
	AN960D10		.	.					WASHER (88044)	1	
	MS21042L3		.	.					NUT (96906)	1	
	MS24665-132		.	.					COTTER PIN (96906)	1	
									——————*——————		
- 4	NAS509-12		.	.					NUT (80205)	1	
- 5	AN315-12R		.	.					NUT (88044)	1	
- 6	MS20002-12		.	.					WASHER (96906)	1	
- 7	775239-1		.	.					LATCH ASSY, tip tank	1	
- 8	762114-5		.	.	.				PIN, tip tank latch link	1	
- 9	762114-4		.	.	.				PIN, tip tank latch link	1	
-10	762114-3		.	.	.				PIN, tip tank latch link	1	
-11	NAS670-31		.	.	.				RING (80205)	6	
-12	AN960-516L		.	.	.				WASHER (88044)	6	
-13	762113		.	.	.				PIN, tip tank latch pivot	1	
-14	MS16624-1062		.	.	.				RING (96906)	2	
-15	762106		.	.	.				PIN, tip tank latch spring	2	
-16	LS1673-3-10		.	.	.				PIN, retainer ring (36659)	2	
-17	NAS51-18		.	.	.				RING (80205)	4	
-18	AN960-10		.	.	.				WASHER (88044)	4	
-19	726184		.	.	.				SPRING, tip tank latch	2	
-20	762107		.	.	.				LINK, tip tank latch inner	1	
-21	775252-1		.	.	.				LINK, tip tank latch outer	1	
-22	764667		.	.	.				HOOK ASSY, tip tank latch	1	
-23	762104		.	.	.	.			HOOK, tip tank latch inner	1	
-24	762105		.	.	.	.			HOOK, tip tank latch outer	1	
-25	773290-3		.	.	.				INDICATOR, tip tank latch	1	
-26	773191-3		.	.	.				BOLT, tip tank latch	1	
-27	AN316-4R		.	.					NUT (88044)	2	
-28	775141-1		.	.					BRACKET ASSY, tip tank ejector	1	
									Attaching Parts		
-29	NAS1103-4		.	.					BOLT (80205)	1	
-30	NAS1203-4		.	.					SCREW (80205)	1	
									——————*——————		
-31	775142-1		.	.					WASHER, wing tip tank release spring	2	
-32	727964-1		.	.					SPRING, wing tip equipment	1	
-33	MS20392-2C27		.	.					PIN (96906)	1	
-34	AN960-10		.	.					WASHER (88044)	1	
	MS24665-132		.	.					COTTER PIN (96906)	1	
-35	775219-1	A.	.	.					ROD, tip tank ejecting (Modified and reidentified to 775219-101 per AA.1F-104S-OT-120A)	1	6701-6765
	775219-101	B.	.	.					ROD, tip tank ejecting (Supersedes 775219-1 per AA.1F-104S-OT-120A)	1	6766-
-36	AN515-8R6		.	.					SCREW (88044)	1	
-37	AN960D8		.	.					WASHER (88044)	1	
-38	MS21042L08		.	.					NUT (96906)	1	
-39	MS25083-2BB6		.	.					JUMPER (96906)	1	
-40	726269-3		.	.					RING, tip tank ejector bonding snap	1	
-41	771745-1		.	.					RETAINER, tip tank ejector	1	
									Attaching Parts		
	NAS1204-19		.	.					SCREW (80205)	1	
									——————*——————		

Wing Equipment

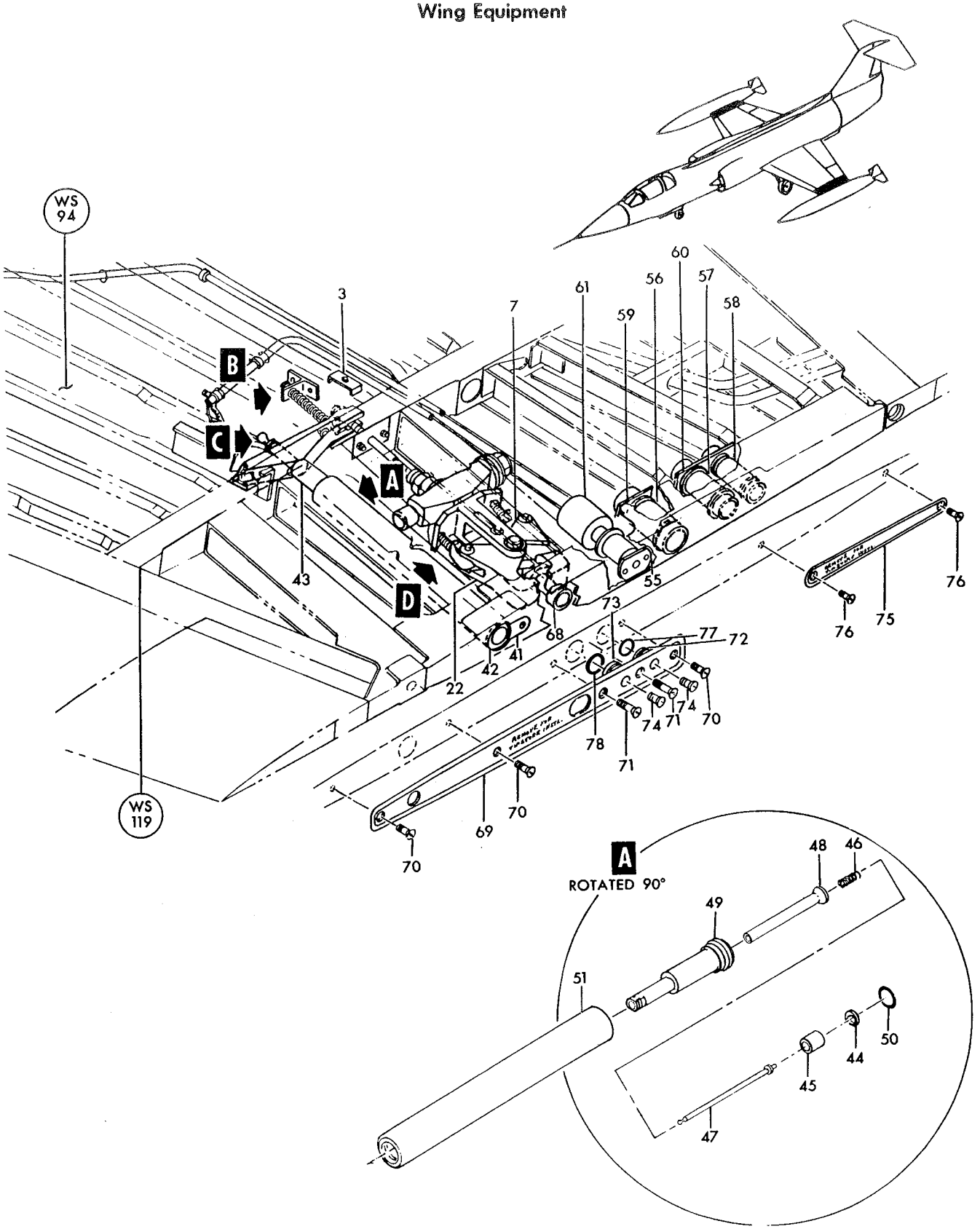

Figure 18—Wing Tip Equipment (Sheet 1 of 2)

Wing Equipment

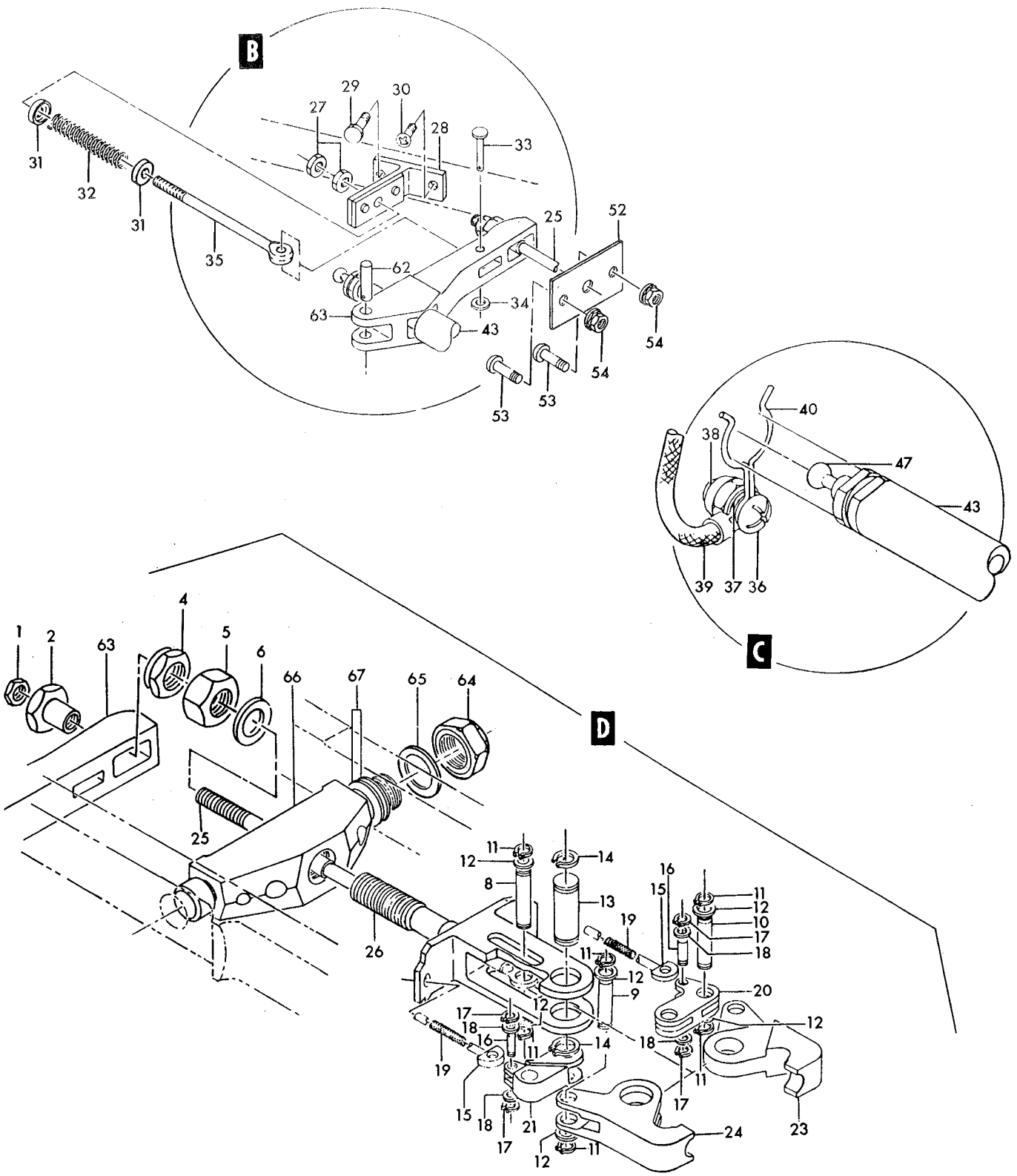

Figure 18—Wing Tip Equipment (Sheet 2 of 2)

Figura e particolare	NDR	DENOMINAZIONE (1 2 3 4 5 6 7)	Quant.	Codice applicab.
18-42	762330	EJECTOR ASSY, (E31) tip tank *(see fig. 17)*	1	
-43	762330-5	PISTON ASSY, tip tank ejector	1	
-44	NAS50-56	RING (80205)	1	
-45	771653-1	SLEEVE, tip tank firing pin	1	
-46	726270-3	SPRING, tip tank ejector firing pin	1	
-47	770094-5	PIN, tip tank ejector firing	1	
-48	770097-5	INSULATOR, tip tank ejector firing	1	
-49	773251-1	PISTON, tip tank auxiliary ejector	1	
-50	MS28775-214	PACKING (96906)	1	
-51	762331	CYLINDER, tip tank ejector	1	
-52	762639	GUIDE, tip tank latch indicator	1	
		Attaching Parts		
-53	NAS623-3-4	SCREW (80205)	2	
-54	MS21042L3	NUT (96906)	2	
		*		
-55	785389-1	SUPPORT ASSY, auto-drop switch	1	
		Attaching Parts		
	NAS1203-4	SCREW (80205)	2	
		*		
-56	760878	FITTING, wing tip vent *(see fig. 10)*	1	
-57	760879	FITTING, wing tip fuel *(see fig. 10)*	1	
-58	760880	FITTING, wing tip air *(see fig. 10)*	1	
-59	762279-101	BRACKET ASSY, wing tip plumbing LH *(see fig. 10)*	1	
	762279-102	BRACKET ASSY, wing tip plumbing RH *(see fig. 10)*	1	
		Attaching Parts		
	NAS1203-3	SCREW (80205)	2	
		*		
-60	762279-4L	BRACKET ASSY, wing tip plumbing LH *(see fig. 10)*	1	
	762279-4R	BRACKET ASSY, wing tip plumbing RH *(see fig. 10)*	1	
		Attaching Parts		
	NAS1203-3	SCREW (80205)	1	
		*		
-61	2EN13-2	SWITCH, tip/pylon auto drop plunger actuated (91929) (Lockheed spec dwg 613681-1)	1	
	783186-1	STRUCTURE INSTL, wing tip LH *(see fig. 3 for reqd)*	REF	
	783186-2	STRUCTURE INSTL, wing tip RH *(see fig. 3 for reqd)*	REF	
-62	762115	PIN, tip tank release arm	1	
-63	775160-1	ARM, tip tank latch release	1	
	783186-3	STRUCTURE ASSY, wing tip LH *(see fig. 3 for reqd)*	REF	
	783186-4	STRUCTURE ASSY, wing tip RH *(see fig. 3 for reqd)*	REF	
-64	NAS1022A12	NUT (80205)	1	
-65	AN960D1216	WASHER, (88044)	1	
-66	762116	SUPPORT, tip tank latch assy	1	
-67	LS2805-7	WASHER, bulkhead fitting (36659)	2	
-68	776640-1	KNOB, tip tank latch (NHA 784613-105)	1	
	785741-101	COVER INSTL, wing tip LH *(see fig. 2 for reqd)*	REF	
	785741-102	COVER INSTL, wing tip RH *(see fig. 2 for reqd)*	REF	
-69	851207-101	COVER ASSY, wing tip LH	1	
	851207-103	COVER ASSY, wing tip RH	1	
		Attaching Parts		
-70	NAS1203-3	SCREW (80205)	3	
-71	NAS1203-7	SCREW (80205)	2	
		*		
	776521-501	COVER ASSY, wing tip	1	
-72	776523-1	PLUG, wing tip air disconnect	1	
-73	776524-1	PLUG, wing tip fuel disconnect	1	
-74	NAS1203-3	SCREW (80205)	2	
-75	851207-105	COVER ASSY, wing tip LH	1	
	851207-107	COVER ASSY, wing tip RH	1	
		Attaching Parts		
-76	NAS1203-2	SCREW (80205)	2	
		*		
-77	MS29513-113	PACKING (96906)	1	
-78	MS29513-212	PACKING (96906)	1	

A - Removed per AA.1F-104S-OT-120A
B - Reqd per AA.1F-104S-OT-120A

Figura e particolare	NDR	DENOMINAZIONE	Quant.	Codice applicab.
		EMPENNAGE ASSEMBLY		
19- 1	783296-109	EMPENNAGE ASSEMBLY *(see fig. 32 for reqd)*	REF	
		Attaching Parts		
- 2	MS20007-12	BOLT (96906)	2	
- 3	NAS629-18	BOLT (80205)	4	
- 4	NAS630-18	BOLT (80205)	4	
- 5	NAS623-3-4	SCREW (80205)	2	
	789232-1	SHIM, empennage and wing instl	AR	
	787834-1	SHIM, empennage fuselage station 614	AR	
- 6	MS20002-7	WASHER (96906)	2	
- 7	MS20002C7	WASHER (96906)	2	
- 8	MS20002C9	WASHER (96906)	4	
- 9	MS20002C10	WASHER (96906)	4	
-10	ZEB1845-070	NUT (72962)	2	
-11	NAS578-9B	RETAINER (80205)	4	
-12	NAS577-9A	NUT (80205)	4	
-13	NAS578-10B	RETAINER (80205)	4	
-14	NAS577-10A	NUT (80205)	4	
-15	783297-105	STABILIZER ASSY, complete vertical *(see fig. 21)*	1	
	LS898-1	PATCH, fabric (36659)	4	
	LS898-3	PATCH, fabric (36659)	5	
	LS329-2	PATCH, fabric (36659)	1	
	LS329-4	PATCH, fabric (36659)	5	
	783249-101	STABILIZER INSTL, horizontal *(see fig. 24)*	1	
-16	783250-1	STABILIZER ASSY, horizontal *(see fig. 24)*	1	6701-6720
	783250-101	STABILIZER ASSY, horizontal *(see fig. 24)*	1	6721-
-17	850076-101	RUDDER INSTL *(see fig. 23)*	1	
-18	783041-103	SERVO INSTL, rudder power control *(see fig. 28)*	1	
-19	784021-3	PLUMBING INSTL, stabilizer servo *(see fig. 29)*	1	
-20	784021-7	PLUMBING INSTL, rudder servo *(see fig. 28)*	1	

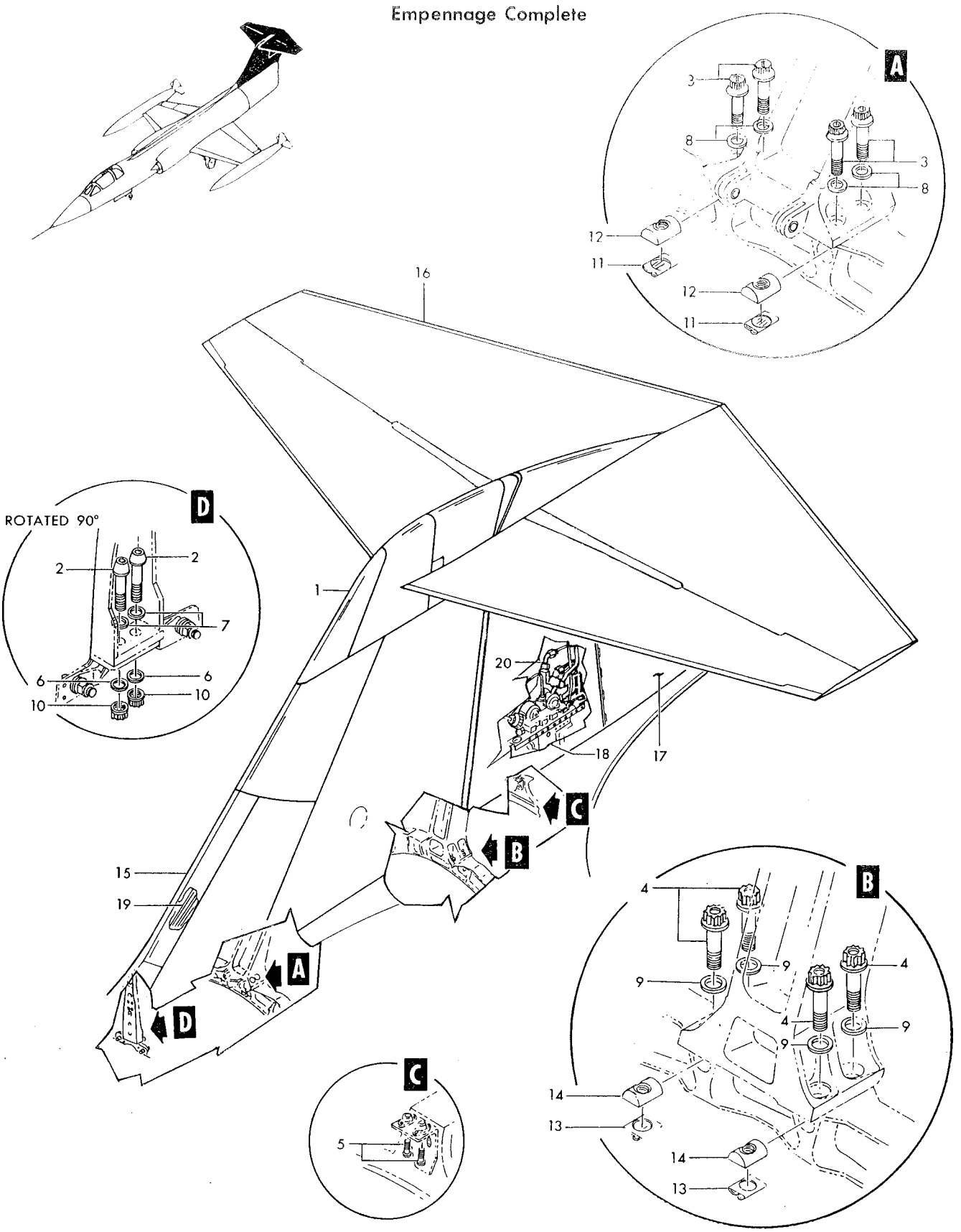

Figure 19—Empennage Assembly

Figura e particolare	NDR	1 2 3 4 5 6 7 DENOMINAZIONE	Quant.	Codice applicab.
		EMPENNAGE FILLETS		
20	783303-101	FILLET INSTL, fin to fuselage LH *(see fig. 32 for reqd)*	REF	6701-6720
	783303-103	FILLET INSTL, fin to fuselage LH *(see fig. 32 for reqd)*	REF	6721-
	783303-102	FILLET INSTL, fin to fuselage RH *(see fig. 32 for reqd)*	REF	
-1	783303-3	FILLET ASSY, LH fin to fuselage	1	
	783303-4	FILLET ASSY, RH fin to fuselage	1	
		Attaching Parts		
-2	NAS1203-5	SCREW (80205)	4	
-3	NAS1203-3	SCREW (80205)	34	
-4	NAS1203-3	SCREW (80205) (LH only)	2	
-5	NAS1203-8	SCREW (80205)	4	
-6	NAS1203-2	SCREW (80205)	15	
-7	NAS1203-1	SCREW (80205)	10	
-8	NAS1203-6	SCREW (80205)	1	
-9	NAS1203-6	SCREW (80205)	1	
-10	NAS623-3-3	SCREW (80205)	11	
-11	NAS623-3-2	SCREW (80205)	5	
-14	760097-4L	SKIN, fin to fus	1	
	760097-4R	SKIN, fin to fus	1	
	760097-12	FILLER, fin to fus	1	
-15	760097-5L	SKIN, fin to fus	1	
	760097-5R	SKIN, fin to fus	1	
	783303-7	FILLER, fin to fus	1	
-16	768236-25	FILLET ASSY, LH fin to fus	1	
	768236-26	FILLET ASSY, RH fin to fus	1	
		Attaching Parts		
-17	NAS1203-3	SCREW (80205)	17	
-18	NAS1203-2	SCREW (80205)	17	
-19	NAS1203-1	SCREW (80205)	7	
-20	783303-5	FILLET ASSY, LH fin to fus	1	
	783303-6	FILLET ASSY, RH fin to fus	1	
		Attaching Parts		
-21	NAS1203-3	SCREW (80205)	13	
-22	NAS1203-3	SCREW (80205)	1	
-23	NAS1203-10	SCREW (80205)	4	
-24	NAS1204-7	SCREW (80205)	1	
-25	NAS1203-5	SCREW (80205)	1	
-26	NAS1203-2	SCREW (80205)	15	
-27	NAS1203-7	SCREW (80205)	2	

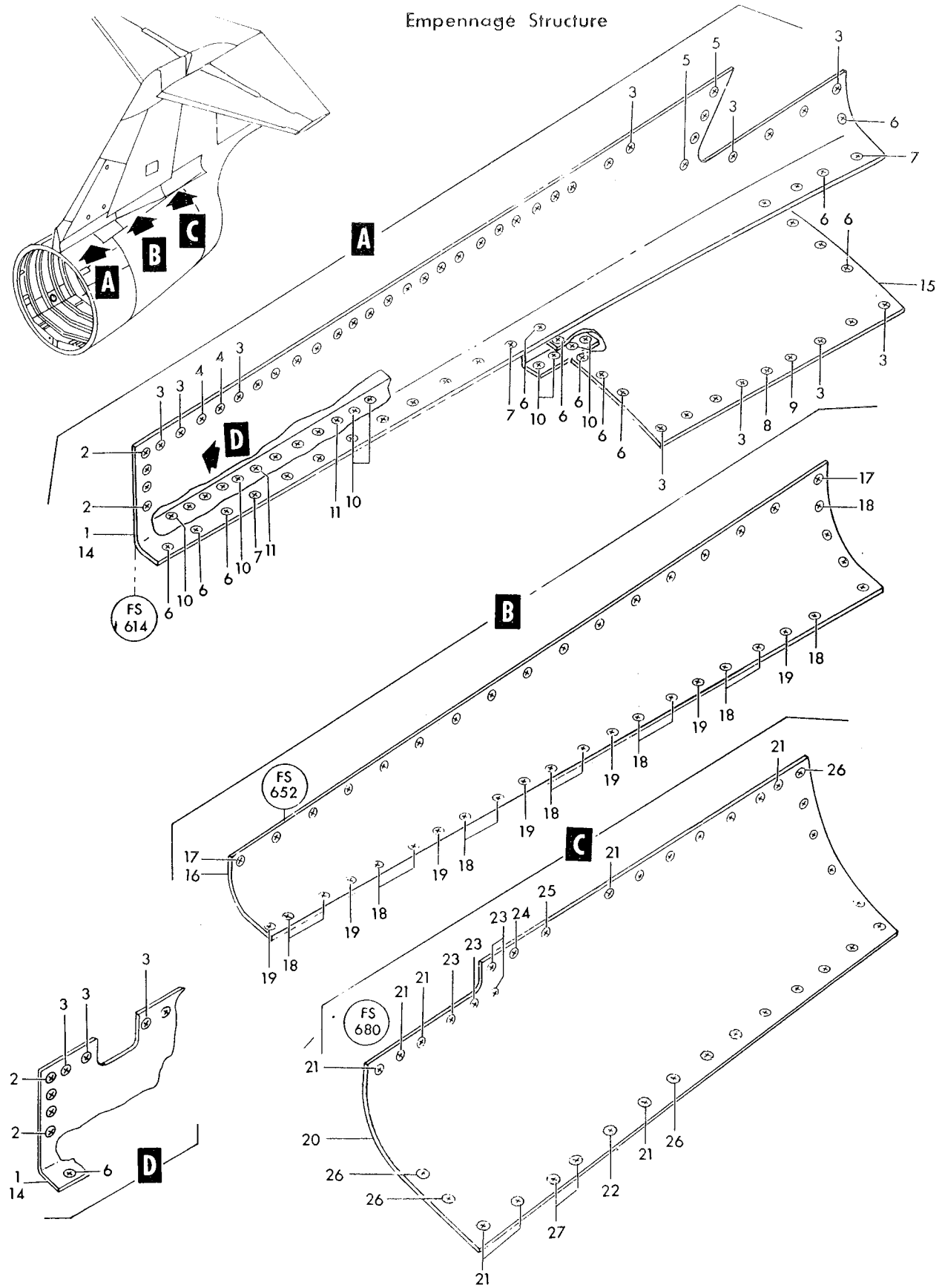

Figure 20—Empennage Fillets

Figura e particolare	NDR	1 2 3 4 5 6 7 DENOMINAZIONE	Quant.	Codice applicab.
		COMPLETE VERTICAL STABILIZER ASSEMBLY		
21-1	783297-105	STABILIZER ASSY, complete vertical *(see fig. 19 for reqd)*	REF	
	783304-1	FAIRING INSTL, vertical stabilizer tip	1	
-2	760055-503	TIP ASSY, fwd fin	1	
		Attaching Parts		
-3	NAS1203-4	SCREW (80205)	16	
-4	NAS1203-6	SCREW (80205)	2	
-5	NAS1203-8	SCREW (80205)	2	
-6	NAS1203-3	SCREW (80205)	6	
-7	764261	LEADING EDGE, fin tip	1	
-8	783304-3	TIP ASSY, vertical stabilizer aft	1	
		Attaching Parts		
-9	NAS1155-12	SCREW (80205)	12	
-10	NAS1203-6	SCREW (80205)	6	
-11	NAS1203-3	SCREW (80205)	10	
-12	NAS1203-10	SCREW (80205)	2	
-13	SL40-524	BARREL NUT (97393)	12	
-14	LS4893-5C	RETAINER, barrel nut (36659)	12	
	783298-107	STRUCTURE ASSY, vertical stabilizer	1	
	783487-1	RIB INSTL, lower canted vertical stabilizer	1	
-14A	799151-101	CLAMPBLOCK ASSY, vertical fin plumbing *(see fig. 29)*	1	
		Attaching Parts		
	NAS428H3-4	BOLT (80205)	2	
	799151-103	CLAMPBLOCK, vertical fin pumbing	1	
	799151-105	CLAMPBLOCK, vertical fin plumbing	1	
	783298-109	STRUCTURE ASSY, leading edge vertical stabilizer	1	
	783300-1	LEADING EGDE INSTL, upper vertical stabilizer	1	
-15	783300-3	PANEL ASSY, upper vertical stabilizer	1	
		Attaching Parts		
-16	NAS1204-6	SCREW (80205)	2	
-17	NAS1203-4	SCREW (80205)	60	
-18	NAS1203-6	SCREW (80205)	2	
-19	NAS1203-5	SCREW (80205)	2	
-20	NAS623-3-11	SCREW (80205)	3	
-21	760066-11	SHIM, upper fin	AR	
-22	760066-8	SHIM, upper fin	AR	
-23	NAS620A10	WASHER (80205)	5	
-24	MS21042L3	NUT (96906)	5	
-25	760066-4	NOSE, upper fin	1	
		Attaching Parts		
-26	NAS1203-3	SCREW (80205)	19	
-27	783301-103	LEADING EDGE INSTL, lower vertical stabilizer *(see fig 22)*	1	
-28	783305-1	C. BEAM ASSY, front vertical stabilizer	1	
-29	LS4216B4-0219	BEARING, plain (36659)	4	
-30	783309-1	RIB, upper canted vertical stabilizer	1	
		Attaching Parts		
-31	NAS623-4-24	SCREW (80205)	2	
-32	NAS620A416	WASHER (80205)	2	
-33	MS21042L4	NUT (96906)	2	
	783314-1	STIFFENER, upper vertical stabilizer	1	
-34	784373-1	PLATE, vertical stabilizer fin tip attachement	2	
	784372-1	FILLER, vertical stabilizer	1	
	787446-1	FILLER ASSY, vertical stabilizer rear beam	1	
-35	783486-1	SKIN, LH vertical stabilizer	1	

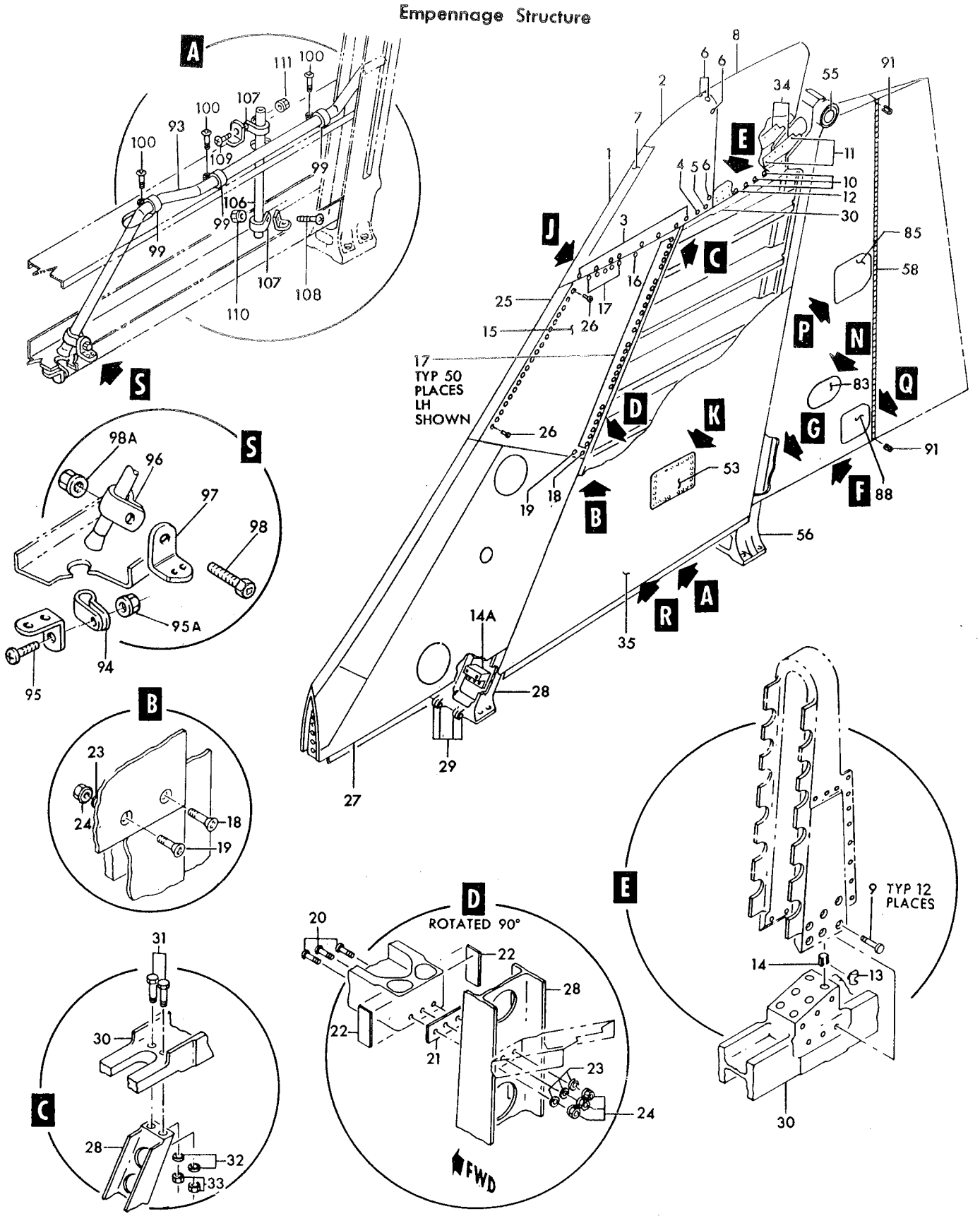

Figure 21—Complete Vertical Stabilizer Assembly (Sheet 1 of 3)

Empennage Structure

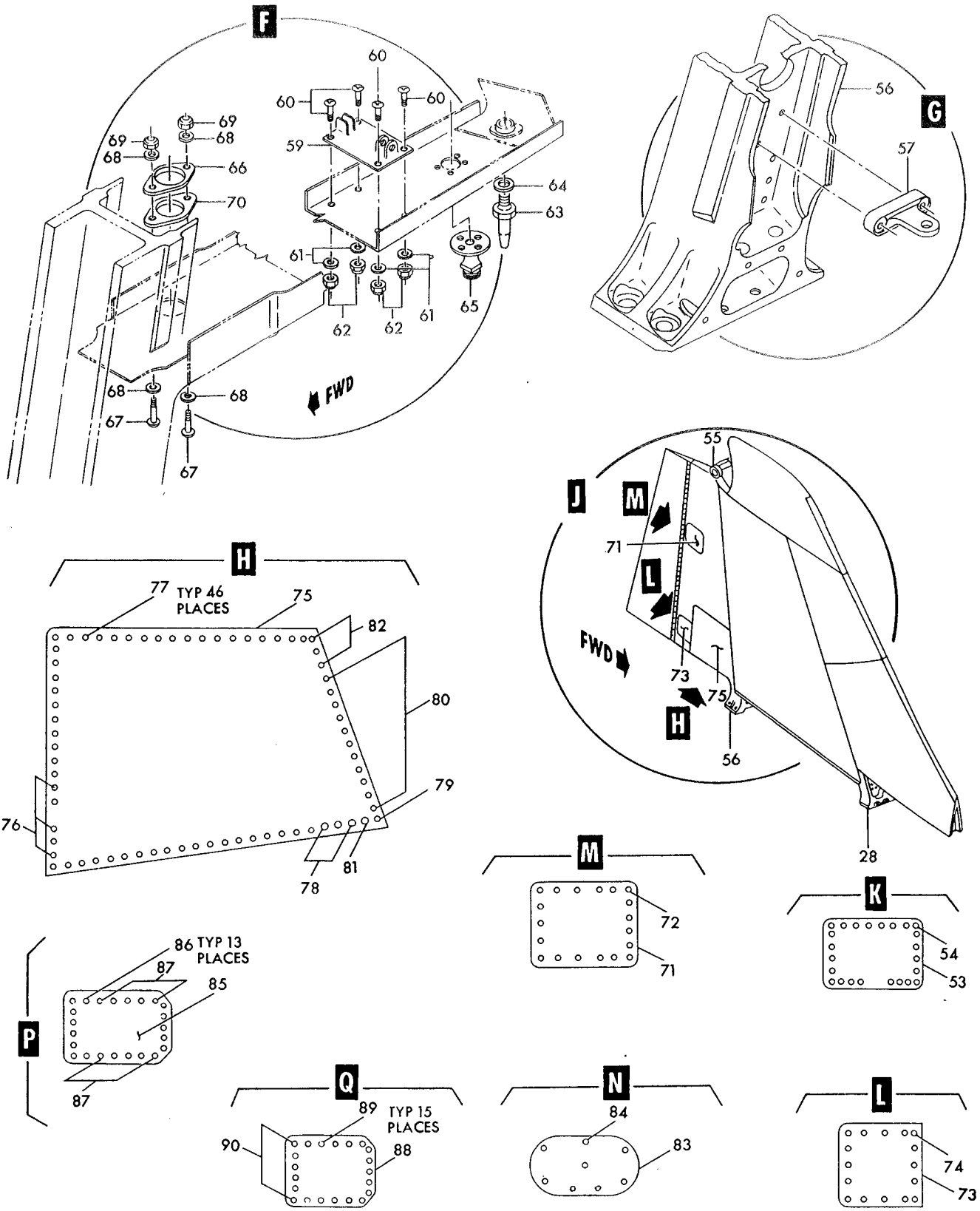

Figure 21—Complete Vertical Stabilizer Assembly (Sheet 2 of 3)

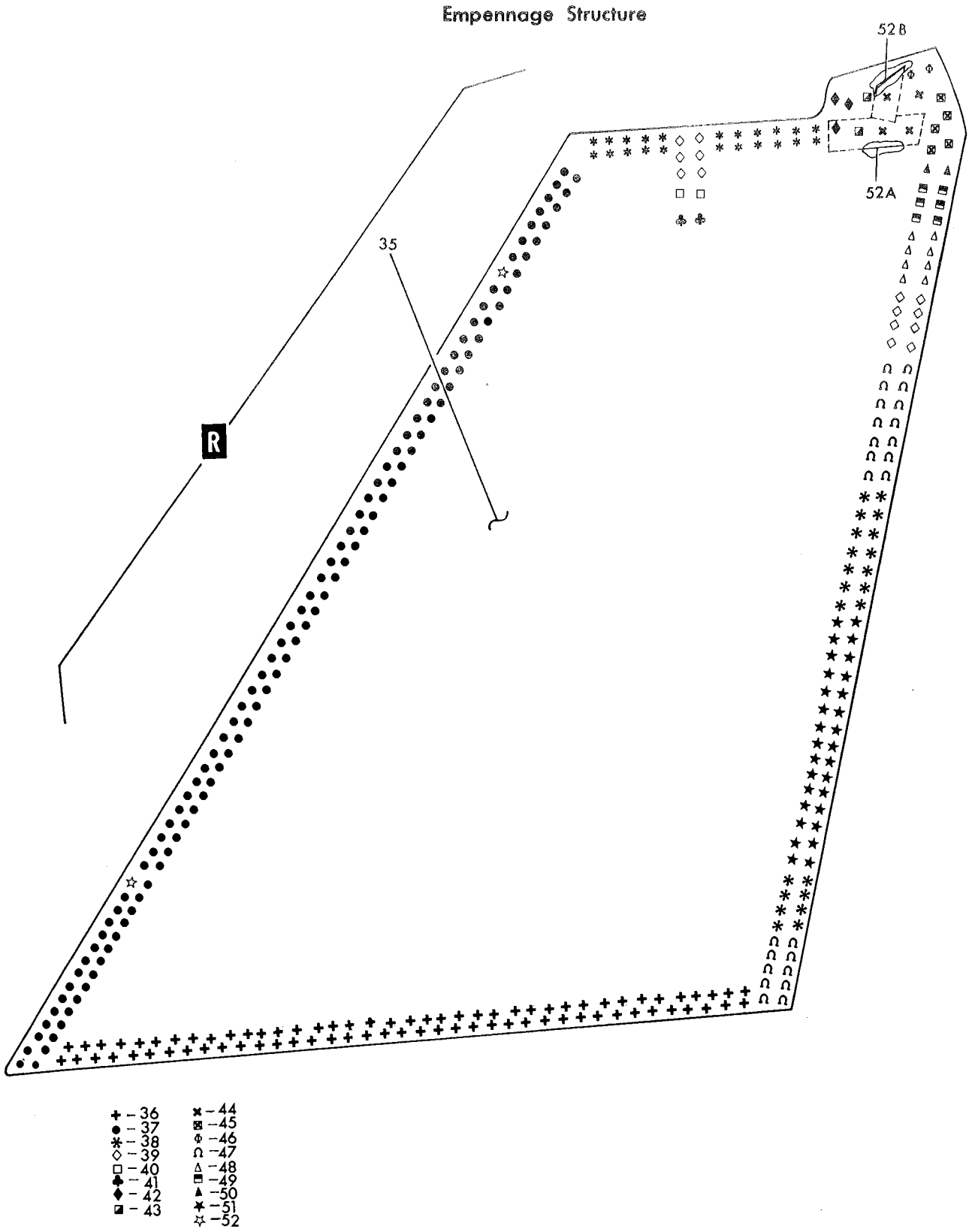

Figure 21—Complete Vertical Stabilizer Assembly (Sheet 3 of 3)

Figura e particolare	NDR	1	2	3	4	5	6	7	DENOMINAZIONE	Quant.	Codice applicab.
21	783486-2								SKIN, RH vertical stabilizer	1	
									Attaching Parts		
-36	NAS1203-4								SCREW (80205)	78	
-37	NAS1203-9								SCREW (RH only) (80205)	119	
-38	NAS1203-9								SCREW (80205)	44	
-39	NAS1203-11								SCREW (80205)	14	
-40	NAS1203-6								SCREW (80205)	2	
-41	NAS1203-3								SCREW (LH only) (80205)	2	
	NAS1203-4								SCREW (RH only) (80205)	2	
-42	NAS1204-13								SCREW (80205)	3	
-43	NAS1155-13								SCREW (80205)	2	
-44	NAS1157-13								SCREW (80205)	4	
-45	NAS1155-16								SCREW (80205)	5	
-46	NAS1155-8								SCREW (80205)	2	
-47	NAS1203-10								SCREW (80205)	24	
-48	NAS1203-12								SCREW (80205)	8	
-49	NAS1203-15								SCREW (80205)	6	
-50	NAS1203-16								SCREW (80205)	2	
-51	NAS1203-8								SCREW (80205)	30	
-52	NAS1203-9								SCREW (80205)	2	
	784371-1								SHIM, upper vertical stabilizer	AR	
	NAS620A10								WASHER (80205)	AR	
	MS21042L3								NUT (96906)	93	
-52A	791629-1								FILLER, vertical stabilizer	2	
-52B	791630-1								FILLER, vertical stabilizer	1	
	791630-2								FILLER, vertical stabilizer	1	
-53	773773-3								DOOR, flux gate compass access	1	
									Attaching Parts		
-54	NAS560HK3-2								SCREW (80205)	24	
-55	760323	A.							BEARING, horizontal stabilizer pivot	2	6701-6711
	760323-101	B.							BEARING, horizontal stabilizer pivot	2	
	783299-101								STRUCTURE ASSY, aft vertical stabilizer *(see fig. 28)*	1	
-56	783307-5	C.							. BEAM, vertical stabilizer rear	1	
-57	769529-1								. FITTING, tie rod servo rudder *(see fig. 28)*	1	
									Attaching Parts		
	NAS1104-14								. BOLT (80205)	2	
	768245-501								. BEAM ASSY, rudder support	1	
-58	768246-1								. . HINGE, rudder support beam	1	
	783959-1								. RIB INSTL, vertical stabilizer station 3	1	
-59	783991-1								. . BRACKET, rudder trim actuator	1	
									Attaching Parts		
-60	NAS623-3-5								. . SCREW (80205)	4	
-61	NAS620A10								. . WASHER (80205)	4	
-62	MS21042L3								. . NUT (96906)	4	
-63	769112-1								. . PIN, tail cone to vertical stabilizer shear	1	
-64	MS20002C6								. . WASHER (96906)	1	
-65	770104-1								. . FITTING, stabilizer compartment drain	1	
-66	769113-1								. . RETAINER, servo torque tube gasket	1	
									Attaching Parts		
-67	NAS623-3-8								. . SCREW (80205)	2	
-68	NAS620A10								. . WASHER (80205)	4	
-69	MS21042L3								. . NUT (96906)	2	
-70	769114-1								. . GASKET, servo torque tube sealing	1	
-71	768234-29								. DOOR, aft vertical stabilizer (RH only)	1	

Figura e particolare	NDR	DENOMINAZIONE	Quant.	Codice applicab.
		Attaching Parts		
21-72	NAS1203-2	SCREW (80205)	19	
-73	768234-27	DOOR, aft vertical stabilizer (RH only)	1	
		Attaching Parts		
-74	NAS1203-2	SCREW (80205)	16	
-75	768234-37	DOOR ASSY aft vertical stabilizer (RH only)	1	
		Attaching Parts		
-76	NAS1203-2	SCREW (80205)	5	
-77	NAS1203-3	SCREW (80205)	46	
-78	NAS1203-4	SCREW (80205)	3	
-79	NAS1204-7	SCREW (80205)	1	
-80	NAS1203-5	SCREW (80205)	11	
-81	NAS1203-6	SCREW (80205)	1	
-82	NAS1203-8	SCREW (80205)	3	
-83	768234-25	DOOR, aft vertical stabilizer (LH only)	1	
		Attaching Parts		
-84	NAS1203-2	SCREW (80205)	8	
	773331-501	DOOR INSTL, rudder cylinder access	1	
-85	773331-5	DOOR ASSY, rudder cylinder access (LH only)	1	
		Attaching Parts		
-86	NAS1203-2	SCREW (80205)	13	
-87	NAS1203-3	SCREW (80205)	10	
-88	773331-3	DOOR ASSY, rudder cylinder access (LH only)	1	
		Attaching Parts		
-89	NAS1203-2	SCREW (80205)	15	
-90	NAS1203-3	SCREW (80205)	6	
-91	NAS561P2-4	PIN (80205)	2	
-93	775159-93	CONDUIT, center section fin	1	
-94	MS21919WH10	CLAMP (96906)	1	
		Attaching Parts		
-95	AN520-10R8	SCREW (88044)	1	
-95A	MS21042L3	NUT (96906)	1	
-96	AN742D12	CLAMP (88044)	1	
-97	TA102-2-16-6	BRACKET (84971)	1	
		Attaching Parts		
-98	NAS1096-3-8	SCREW (80205)	1	
-98A	MS21042L3	NUT (96906)	1	
-99	AN742D12	CLAMP (88044)	3	
		Attaching Parts		
-100	AN520-10R8	SCREW (88044)	3	
	AN960D10	WASHER (88044)	3	
	MS21042L3	NUT (96906)	3	
-106	783298-13	TUBE, vertical stabilizer	1	
-107	AN742D14	CLAMP (88044)	2	
		Attaching Parts		
-108	NAS623-3-2	SCREW (80205)	1	
-109	AN520C10R10	SCREW (88044)	1	
-110	MS21042L3	NUT (96906)	1	
-111	NAS679C3W	NUT (80205)	1	
	849921-103	ELECTRICAL INSTL, fin assy *(see fig. 197)*	1	
	784021-5	PLUMBING INSTL, vertical stabilizer *(see fig. 29)*	1	

A - Removed per AA.1F-104S-OT-103
B - Reqd per AA.1F-104S-OT-103
C - Modified per AA.1F-104-OT-782

Figura e particolare	NDR	DENOMINAZIONE 1 2 3 4 5 6 7	Quant.	Codice applicab.
		LOWER VERTICAL STABILIZER LEADING EDGE INSTALLATION		
22	783301-103	. LEADING EDGE INSTL, lower stabilizer *(see fig. 21 for reqd)*	REF	
-1	783302-101	. . PANEL ASSY, LH leading edge vertical stabilizer skin access	1	6701-6720
	783302-103	. . PANEL ASSY, LH leading edge vertical stabilizer skin access	1	6721-
	799105-101	. . PANEL ASSY, RH leading edge vertical stabilizer skin access	1	
		Attaching Parts		
-2	NAS1203-4	. . SCREW (48 reqd on LH and 56 reqd on RH) (80205)	AR	
-3	NAS1203-5	. . SCREW (LH only) (80205)	8	
-4	NAS1203-7	. . SCREW (80205)	2	
-5	NAS1204-2	. . SCREW (80205)	1	
-6	NAS1204-5	. . SCREW (80205)	4	
-7	NAS1204-6	. . SCREW (80205)	6	
-8	NAS1204-9	. . SCREW (80205)	7	
-9	NAS1204-4	. . SCREW (80205)	2	
		*		
-9A	792415-1	. . . FLANGE, overboard drain (LH only)	1	
-10	760974-5	. . . COVER, fin leading edge stabilizer booster access (LH only)	3	
		Attaching Parts		
	NAS1203-2	. . . SCREW (80205)	10	
		*		
-11	760974-9	. . . DOOR ASSY, fin leading edge stabilizer booster access (LH only)	1	
		Attaching Parts		
	NAS1203-2	. . . SCREW (80205)	2	
		*		
-12	785795-1	. . POST ASSY, fin leading edge	1	
		Attaching Parts		
	NAS1203-4	. . SCREW (80205)	4	
		*		
	785795-3	. . . POST	2	
	SALPT6-4	. . . LOCKBOLT (29666)	2	
	DCC6	. . . COLLAR (29666)	2	
-13	785820-1	. . POST ASSY, fin leading edge	1	
		Attaching Parts		
	NAS1203-11	. . SCREW (80205)	4	
		*		
	785820-3	. . . POST	1	
	785820-5	. . . POST	1	
	SALPT6-4	. . . LOCKBOLT (29666)	2	
	DCC6	. . . COLLAR (29666)	2	
-14	787924-1	. . POST, dorsal access panel disconnect bracket and cross tie	1	
		Attaching Parts		
	NAS1203-4	. . SCREW (80205)	4	
		*		
	760983-3	. . . POST	2	
	SALPT6-5	. . . LOCKBOLT (29666)	2	
	DCC6	. . . COLLAR (29666)	2	
-15	760977	. . FITTING, upper dorsal fin leading edge beam	1	
		Attaching Parts		
	NAS623-3-7	. . SCREW (80205)	2	
	NAS620A10	. . WASHER (80205)	2	
	MS21042L3	. . NUT (96906)	2	
		*		
-16	760102-501	. . LEADING EDGE ASSY, dorsal	1	
		Attaching Parts		
-17	NAS1203-5	. . SCREW (80205)	2	
-18	NAS1203-4	. . SCREW (80205)	4	
-19	NAS623-3-4	. . SCREW (80205)	4	
		*		
-20	760102-4	. . . DOOR (LH only)	1	

Empennage Structure

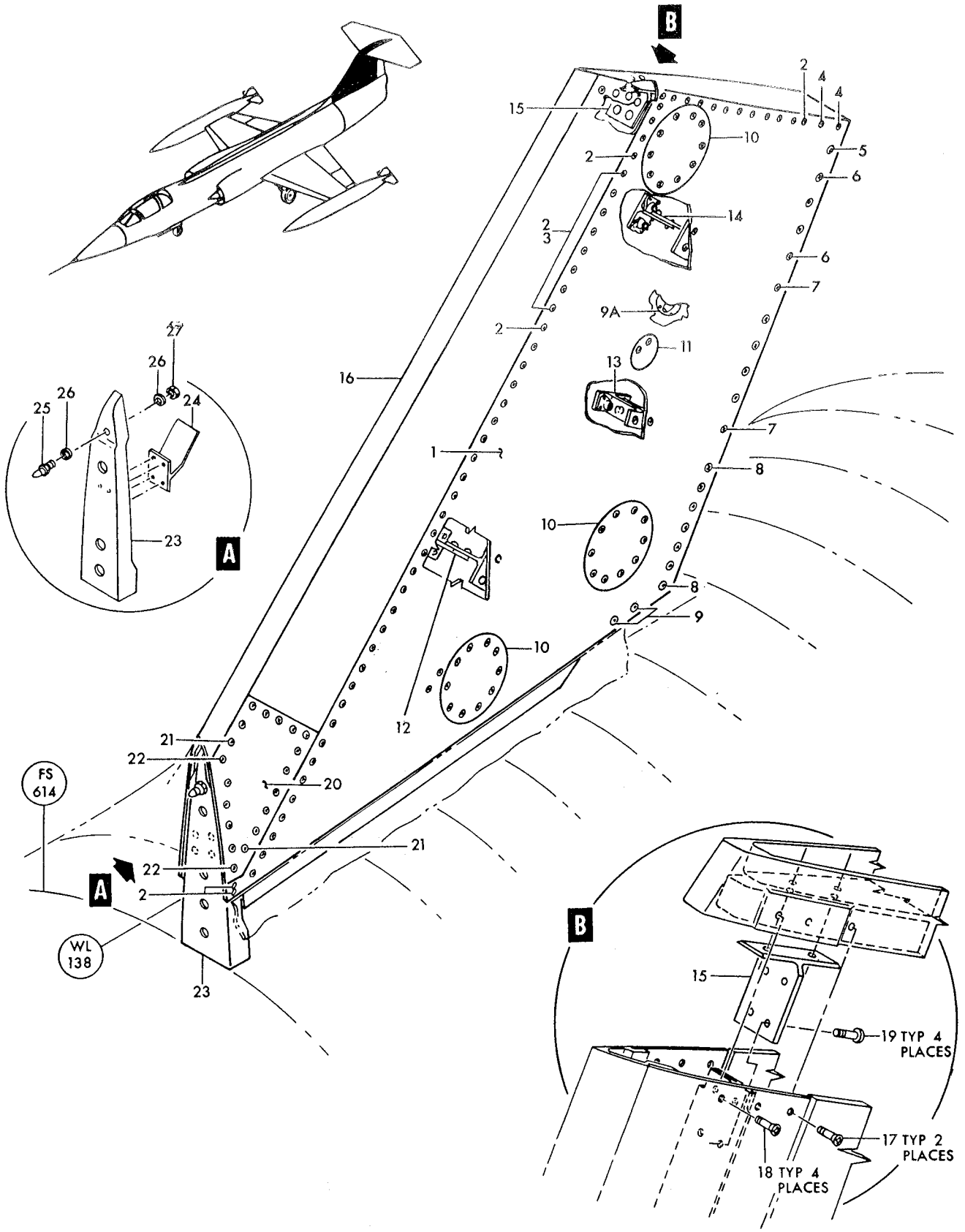

Figure 22—Lower Vertical Stabilizer Leading Edge Installation

Figura e particolare	NDR	1 2 3 4 5 6 7 DENOMINAZIONE	Quant.	Codice applicab.
		Attaching Parts		
22-21	NAS1203-2	SCREW (80205)	13	
-22	NAS1203-4	SCREW (80205)	6	
-23	760443	FORMER, fuselage station 614 aft dorsal	1	
-24	760976	FITTING, lower leading edge dorsal fin beam	1	
		Attaching Parts		
	NAS1203-4	SCREW (80205)	4	
	AN960D10	WASHER (88044)	4	
	MS21042L3	NUT (96906)	4	
-25	760975	PIN, aft dorsal shear	1	
-26	NAS70A328-563	WASHER (80205)	2	
-27	NAS1291-5	NUT (80205)	1	

Figura e particolare	NDR	DENOMINAZIONE 1 2 3 4 5 6 7	Quant.	Codice applicab.
		RUDDER INSTALLATION		
23	850076-101	. RUDDER INSTALLATION *(see fig. 29 for reqd)*	REF	
-1	851313-101	. . HINGE PIN, rudder	1	
-2	851313-103	. . HINGE PIN, rudder	1	
-3	850076-103	. . RUDDER ASSY	1	
-4	768235-39	. . . WEDGE, rudder	1	
-5	768249-1	. . . SPACER, rudder	11	
-6	768249-3	. . . SPACER, rudder	4	
-7	768235-61	. . . COVER	1	
		Attaching Parts		
-8	NAS1203-1	. . . SCREW (80205)	2	
-9	NAS1203-2	. . . SCREW (80205)	3	
		*		
-10	768235-63	. . . COVER	1	
		Attaching Parts		
-11	NAS1203-1	. . . SCREW (80205)	2	
-12	NAS1203-2	. . . SCREW (80205)	3	
		*		
-13	778061-1	. . . FITTING ASSY, rudder	2	
-14	728010-1	. . . . BUSHING, rudder fitting	4	
-15	NAS623-2-13	. . . . SCREW (80205)	2	
-16	MS21042L08	. . . . NUT (96906)	2	
-17	768250-1	. . . HALF HINGE, rudder	1	
-18	772007-1	. . . DECAL, symmetry point	4	
-19	MS27253-1	. . . NAMEPLATE (96906)	1	
-20	728011-1	. . BOLT, rudder fitting	2	
-21	AN310-4	. . NUT (88044)	2	
-22	NAS43DD4-64	. . SPACER (80205)	2	
	MS24665-153	. . COTTER PIN (96906)	2	
-23	769321-1	. . STOP, hinge pin rudder	1	
		Attaching Parts		
	NAS1203-2	. . SCREW (80205)	3	
		*		
-24	MS25083-1BB4	. . JUMPER (96906)	2	
		Attaching Parts		
	NAS623-3-1	. . SCREW (80205)	4	
		*		

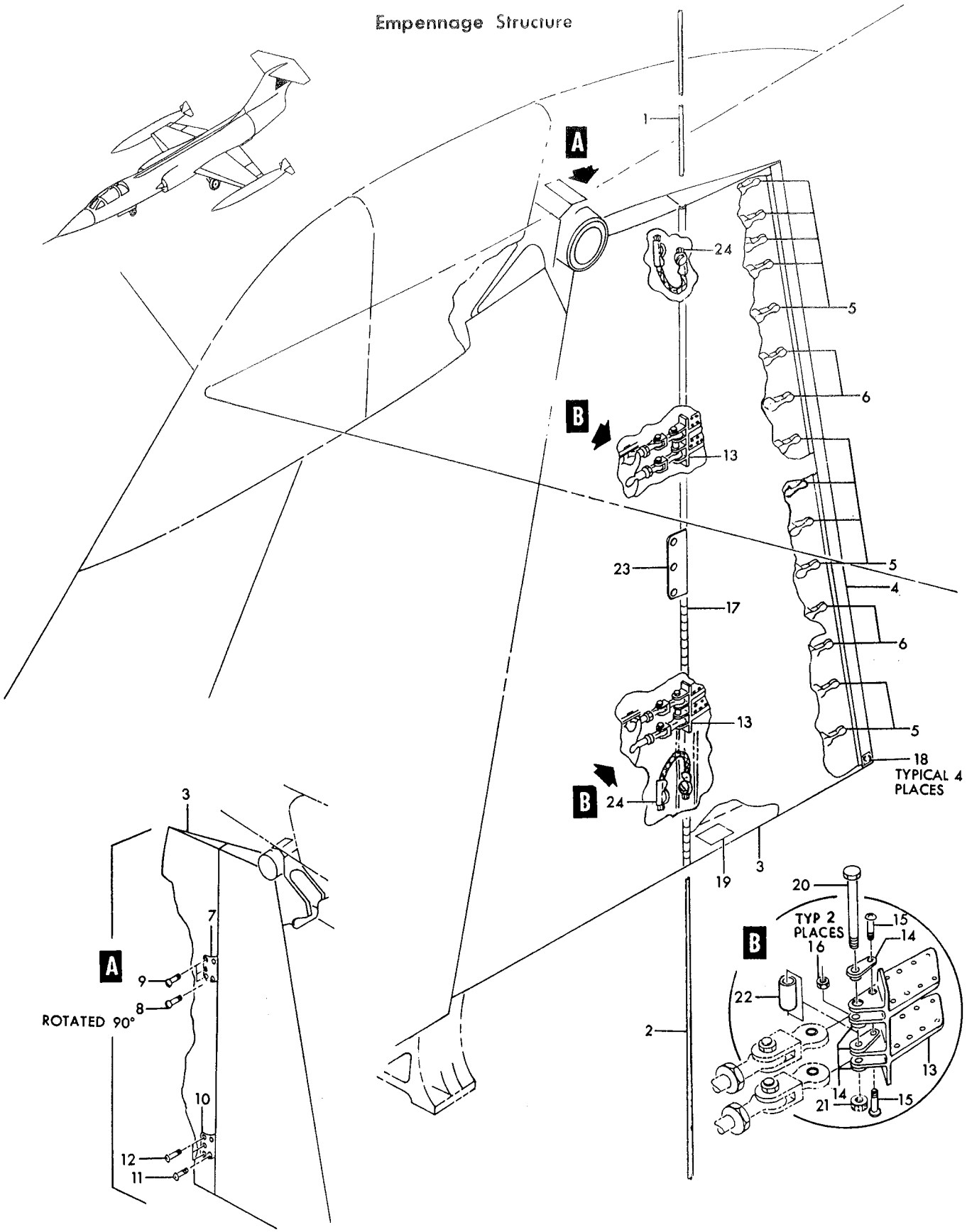

Figure 23—Rudder Installation

Figura e particolare	NDR		1	2	3	4	5	6	7	DENOMINAZIONE	Quant.	Codice applicab.
										HORIZONTAL STABILIZER COMPLETE		
24	783249-101									STABILIZER INSTL, horizontal *(see fig. 19 for reqd)*	REF	
-1	MS25083-1BB7									JUMPER (twist 1 1-2 to 2 1-2 maximum turns) (96906)	2	
										Attaching Parts		
-2	NAS623-3-5									SCREW (80205)	2	
-3	NAS620A10									WASHER (80205)	4	
-4	MS21042L3									NUT (96906)	2	
-5	783264-101									BOLT, horizontal stabilizer pivot	1	
-6	760580									WASHER, horizontal stabilizer pivot	1	
-7	AN310-12									NUT (88044)	1	
	MS24665-357									COTTER PIN (96906)	1	
-8	783250-1									STABILIZER ASSY, horizontal *(see fig. 19 for reqd)*	REF	6701-6720
	783250-101									STABILIZER ASSY, horizontal *(see fig. 19 for reqd)*	REF	6721-
	783399-1									FAIRING INSTL, horizontal stabilizer	1	
-9	783399-3									FAIRING ASSY, horizontal stabilizer	1	
										Attaching Parts		
-10	NAS1203-2									SCREW (80205)	36	
-11	783399-5									CHANNEL ASSY, horizontal stabilizer	1	
-12	783399-7									ZEE ASSY, LH horizontal stabilizer	1	
-13	783399-8									ZEE ASSY, RH horizontal stabilizer	1	
										Attaching Parts		
-14	NAS623-3-5									SCREW (80205)	2	
-15	MS21042L3									NUT (96906)	2	
	783266-1	A.								HORN ASSY horizontal stabilizer (Reworked and modified to 783266-101 per AA.1F-104-OT-649)	1	6701-6720
-16	783266-101	B.								HORN ASSY, horizontal stabilizer (Supersedes 783266-1 per AA.1F-104-OT-649)	1	
										Attaching Parts		
-17	MS20007-42									BOLT (96906)	2	
-18	MS20010-66									BOLT (96906)	1	
-19	MS20002C7									WASHER (96906)	2	
-20	MS20002-7									WASHER (96906)	2	
-21	MS20002C10									WASHER (96906)	1	
-22	MS20002-10									WASHER (96906)	1	
-23	EB070									NUT, 12 point high tension (72962)	2	
-24	EB108									NUT, 12 point high tension (72962)	1	
-25	760266									BLOCK ASSY, horizontal stabilizer horn rubbing	2	
										Attaching Parts		
-26	NAS623-4-14									SCREW (80205)	2	
-27	AN960D416									WASHER (88044)	2	
-28	MS21042L4									NUT (96906)	2	
-29	760266-3									RETAINER	1	
-30	761510									BLOCK, horizontal stabilizer yaw restraining	1	
-31	760296									SHIM, horizontal stabilizer horn rubbing block	2	
-32	783268-1									BUSHING, horizontal stabilizer horn	4	
-33	761813									LUG, horizontal stabilizer bonding	1	
-34	760370-8									BRUSH ASSY, horizontal stabilizer 2 nose	2	
										Attaching Parts		
	NAS623-3-1									SCREW (80205)	6	
-35	81113A1050AT135									BRUSH, strip (73425)	1	
	783252-1									LEADING EDGE ASSY, horizontal stabilizer	1	
	783252-3									STRUCTURE ASSY, horizontal stabilizer	1	
	783251-1									STRUCTURE ASSY, center horizontal stabilizer	1	
-36	783258-1									SUPPORT, forward horizontal stabilizer horn	1	

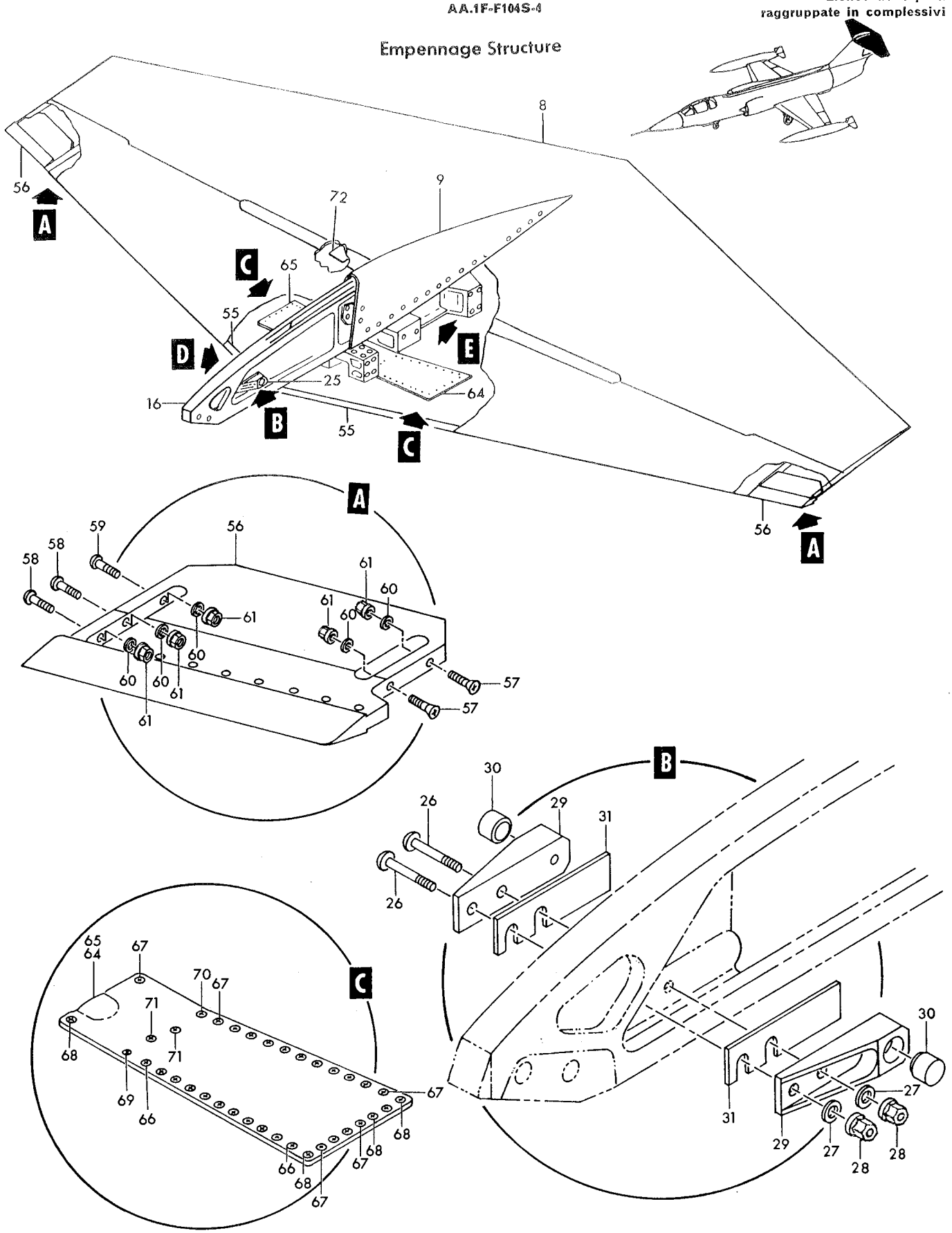

Figure 24—Horizontal Stabilizer Complete (Sheet 1 of 2)

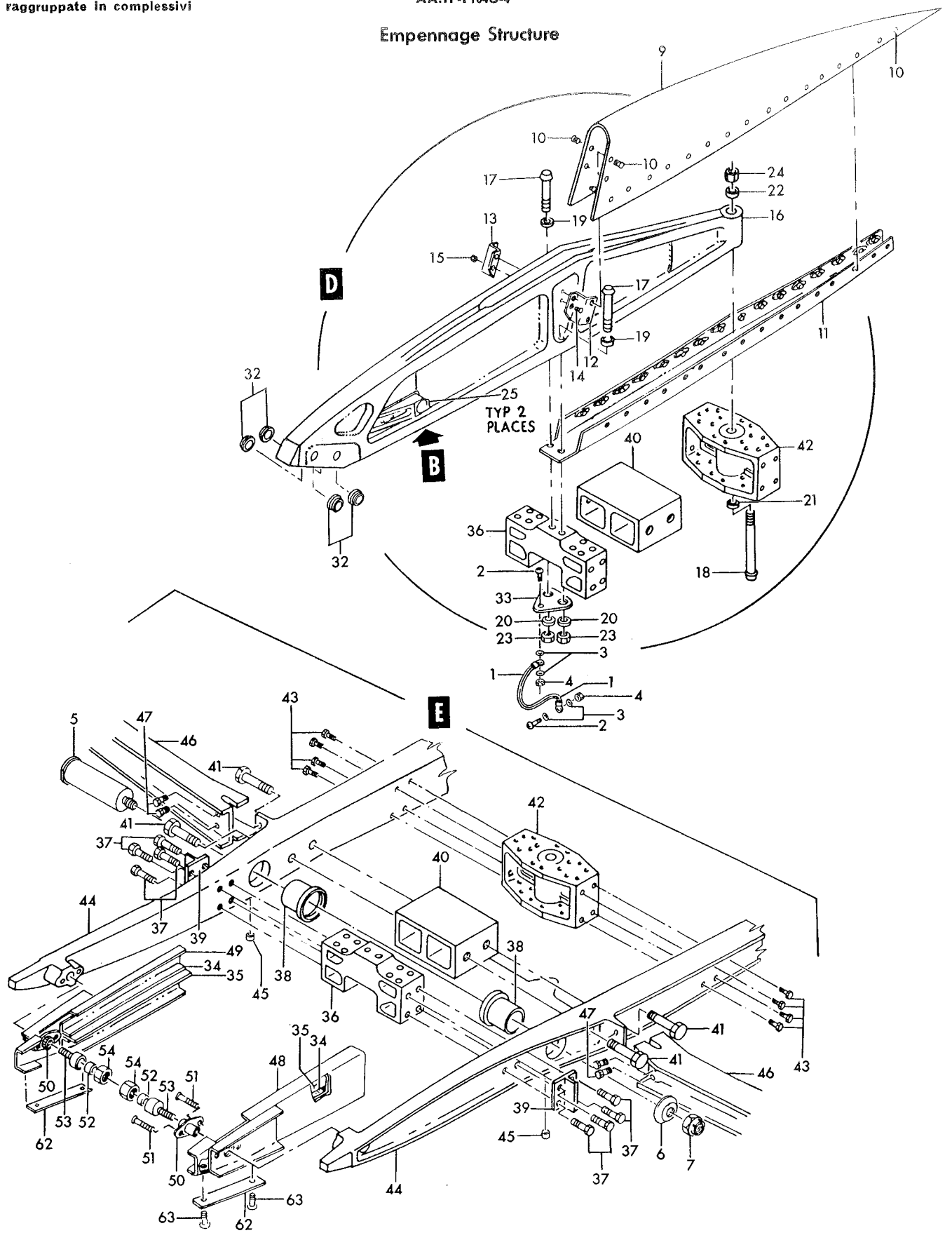

Figure 24— Horizontal Stabilizer Complete (Sheet 2 of 2)

Figura e particolare	NDR	DENOMINAZIONE	Quant.	Codice applicab.
		Attaching Parts		
24-37	NAS1106-11D	BOLT (80205)	8	
	AN960D616	WASHER (88044)	8	
	MS21042L6	NUT (96906)	8	
-38	783265-1	BEARING, horizontal stabilizer pivot bolt	2	
-39	783759-1	CLIP, horizontal stabilizer center structure	2	
-40	783259-1	SUPPORT, horizontal stabilizer center structure	1	
		Attaching Parts		
-41	NAS1112-32D	BOLT (80205)	4	
	AN960D1216	WASHER (88044)	4	
	NAS1022A12	NUT (80205)	4	
-42	783261-1	SUPPORT, aft horizontal stabilizer horn	1	
		Attaching Parts		
-43	NAS1105-8D	BOLT (80205)	8	
	AN960D516	WASHER (88044)	8	
	MS21042L5	NUT (96906)	8	
-44	783262-1	RIB, horizontal stabilizer pivot	2	
-45	NAS516-1	FITTING (lubrication) (80205)	2	
-46	783256-1	BEAM, horizontal stabilizer	2	
-47	NAS1105-10D	BOLT (80205)	4	
	AN960D516	WASHER (88044)	4	
	MS21042L5	NUT (96906)	4	
-48	760370L	RIB ASSY, horizontal stabilizer station 2 nose	1	
-49	760370R	RIB ASSY, horizontal stabilizer station 2 nose	1	
-50	760910	NUT PLATE ASSY, horizontal stabilizer yaw restraining	2	
		Attaching Parts		
-51	NAS1204-22	SCREW (80205)	2	
	761753	BOLT ASSY, horizontal stabilizer yaw restraining	2	
-52	761510	. BLOCK, horizontal stabilizer yaw restraining	1	
-53	761392	. BOLT, horizontal stabilizer yaw restraining	1	
-54	761393	LOCK FERRULE, horizontal stabilizer yaw restraining mechanism	2	
-55	761013	LEADING EDGE, horizontal stabilizer	2	
-56	761391	WEIGHT, horizontal stabilizer	2	
		Attaching Parts		
-57	NAS1203-17	SCREW (80205)	2	
-58	NAS623-3-20	SCREW (80205)	2	
-59	NAS623-3-16	SCREW (80205)	1	
-60	NAS620A10	WASHER (80205)	5	
-61	MS21042L3	NUT (96906)	5	
-62	760359-10	DOOR ASSY, horizontal stabilizer	2	
		Attaching Parts		
-63	NAS1203-2	SCREW (80205)	2	
-64	783252-9	DOOR, LH horizontal stabilizer	1	
-65	783252-10	DOOR, RH horizontal stabilizer	1	
		Attaching Parts		
-66	NAS1203-2	SCREW (80205)	11	
-67	NAS1203-3	SCREW (80205)	16	
-68	NAS1203-4	SCREW (80205)	5	
-69	NAS1203-5	SCREW (80205)	1	
-70	NAS1203-12	SCREW (80205)	1	
-71	NAS1203-7	SCREW (80205)	2	
-72	MS27253-2	NAMEPLATE (96906)	1	

A - Removed per AA.1F-104-OT-649
B - Reqd per AA.1F-104-OT-649

Figura e particolare	NDR	DENOMINAZIONE 1 2 3 4 5 6 7	Quant.	Codice applicab.
		RUDDER SERVO QUADRANT ASSEMBLY		
25- 1	783180-3	QUADRANT ASSY, rudder servo *(see fig. 28 for reqd)*	REF	
		Attaching Parts		
- 2	AN175H13	BOLT (88044)	2	
- 3	AN174H11A	BOLT (88044)	2	
- 4	AN960D516	WASHER (88044)	2	
- 5	AN960D416	WASHER (88044)	2	
- 6	2752-054	NUT, self locking barrel (72962)	2	
- 7	LS4893-5	RETAINER, barrel nut (36659)	2	
- 8	MS21042L4	NUT (96906)	2	
		——————✲——————		
- 9	NAS1022A10	NUT (80205)	1	
-10	AN960-1016	WASHER (88044)	1	
-11	774891-1	ARM ASSY, rudder servo quadrant input	1	
-12	AN320-4	NUT (88044)	1	
	MS24665-132	COTTER PIN (96906)	1	
-13	AN960D416	WASHER (88044)	1	
-14	NAS1204-10D	SCREW (80205)	1	
-15	LS3859-14-48	BUSHING, plain (36659)	1	
-16	AN960-1416	WASHER (88044)	1	
-17	B541DD	BEARING, shielded torque tube (21335)	2	
	783182-1	QUADRANT ASSY, rudder servo pilot input *(see fig. 67)*	1	
-18	783948-1	TORQUE TUBE, rudder servo	1	
-19	768646-1	GUARD, rudder servo pulley	1	
		Attaching Parts		
-20	AN507-832R14	SCREW (88044)	1	
	AN960D8	WASHER (88044)	1	
	MS21042L08	NUT (96906)	1	
		——————✲——————		
-21	776492-1	CAM ASSY, rudder servo feel	1	
		Attaching Parts		
-22	NAS1203-4	SCREW (80205)	2	
-23	NAS1203-12	SCREW (80205)	1	
	AN960D10	WASHER (88044)	1	
	MS21042L3	NUT (80205)	1	
		——————✲——————		
-24	783359-1	STOP, rudder servo quadrant	1	
		Attaching Parts		
-24A	NAS623-3-4	SCREW (80205)	1	
-24B	NAS623-3-5	SCREW (80205)	1	
	AN960D10	WASHER (88044)	2	
	MS21042L3	NUT (80205)	2	
		——————✲——————		
-25	775109-2	STOP, rudder servo quadrant	1	
		Attaching Parts		
-26	NAS623-3-4	SCREW (80205)	1	
-27	NAS623-3-5	SCREW (80205)	1	
	AN960D10	WASHER (88044)	2	
	MS21042L3	NUT (80205)	2	
		——————✲——————		
-28	783181-1	QUADRANT, rubber servo pilot input	1	
-29	NAS428-4-12	BOLT (80205)	2	
-30	NAS509-4	NUT (80205)	2	
-31	761677	CUP, servo stabilizer artificial feel system pre-load adjusting actuating spring	1	
-32	728266-1	SPRING, rudder servo artificial feel	1	
-33	761678	RETAINER, stabilizer feel system spring	1	
-34	768751-1	GUARD, lower rudder servo pulley	1	
		Attaching Parts		
-35	NAS623-3-4	SCREW (80205)	2	

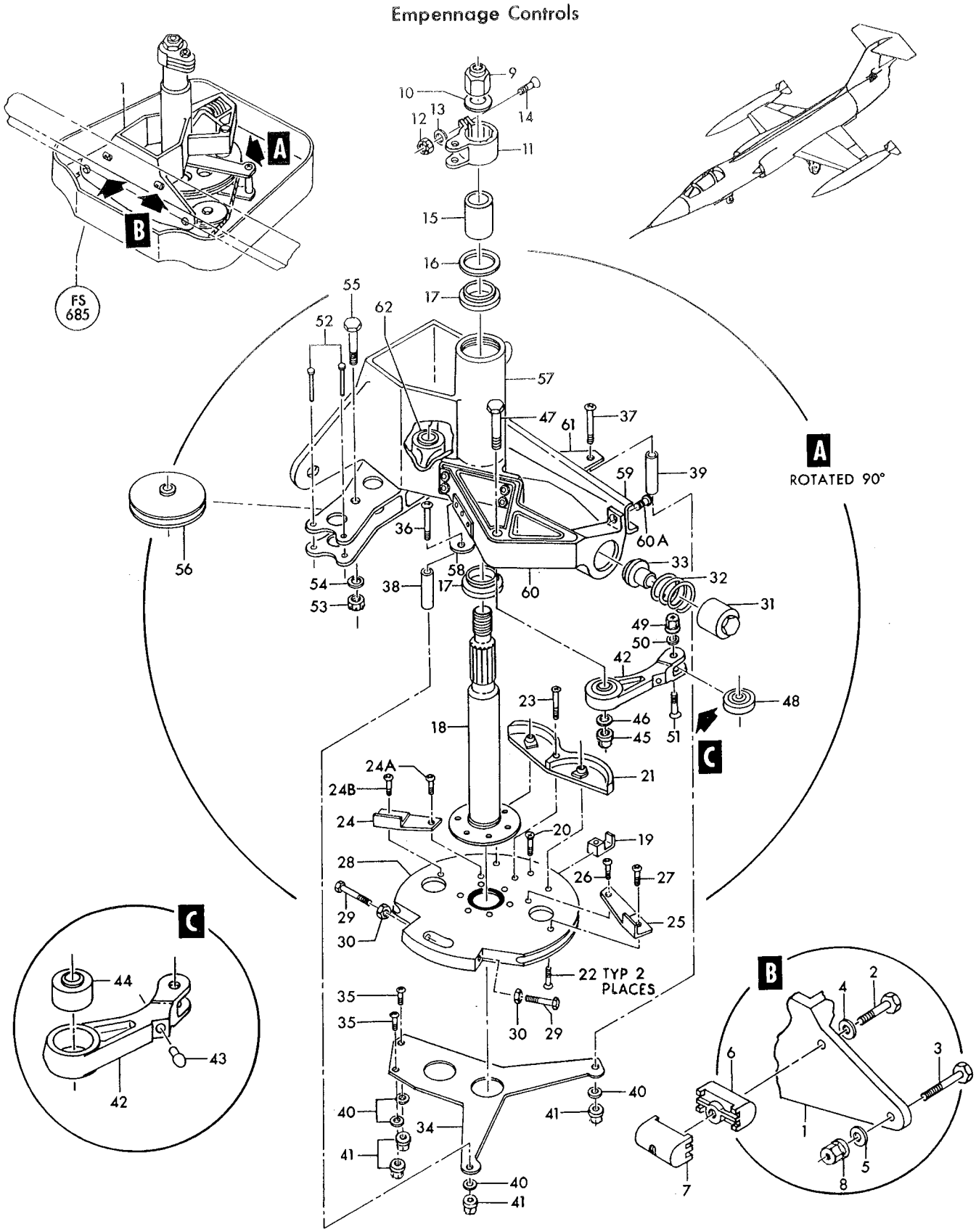

Figure 25—Rudder Servo Quadrant Assembly

Figura e particolare	NDR	DENOMINAZIONE	Quant.	Codice applicab.
		1 2 3 4 5 6 7		
25-36	NAS623-3-21	SCREW (80205)	1	
-37	NAS623-3-23	SCREW (80205)	1	
-38	NAS43DD3-76	SPACER (80205)	1	
-39	NAS43DD3-84	SPACER (80205)	1	
-40	AN960D10	WASHER (88044)	4	
-41	MS21042L3	NUT (96906)	4	
-42	774542-1	ARM ASSY, rudder servo feel	1	
-43	761676	. BUTTON, stabilizer feel system spring	1	
-44	PD5K	. BEARING, pulley (21335)	1	
-45	MS21042L5	NUT (96906)	1	
-46	AN970-5	WASHER (88044)	1	
-47	AN175H20	BOLT (88044)	1	
-48	KP4R16-2	BEARING, track roller (21335)	1	
-49	MS21042L4	NUT (96906)	1	
-50	AN960D416	WASHER (88044)	1	
-51	NAS517-4-11	SCREW (80205)	1	
-52	NAS427K19	PIN (80205)	2	
-53	AN320-5	NUT (88044)	1	
	MS24665-134	COTTER PIN (96906)	1	
-54	AN960D516	WASHER (88044)	1	
-55	NAS1105-190	BOLT (80205)	1	
-56	LS9020A2	PULLEY, control (36659)	1	
	783361-1	SUPPORT ASSY, rudder servo	1	
-57	783179-1	. SUPPORT, rudder servo quadrant	1	
-58	774896-1	. GUARD, rudder quadrant cable	1	
-59	774544-1	. BEAM, rudder quadrant	1	
-60	769687-1	. ARM, rudder servo feel spring support	1	
		Attaching Parts		
	NAS623-3-7	. SCREW (80205)	4	
-60A	NAS623-3-4	. SCREW (80205)	1	
	AN960D10	. WASHER (88044)	5	
	MS21042L3	. NUT (80205)	5	
-61	774901-1	. GUARD, rudder quadrant cable	1	
-62	LS3859F6-36	. BUSHING, plain (36659)	1	

Figura e particolare	NDR	DENOMINAZIONE 1 2 3 4 5 6 7	Quant.	Codice applicab.
		STABILIZER ACTUATING AND TRIM SYSTEM		
26- 1	761309-101	ROD ASSY, stabilizer disconnect *(see fig. 32 for reqd)*	REF	
	783040-105	SERVO INSTL, stabilizer *(see fig. 32 for reqd)*	REF	
- 2	AN23-18	BOLT (88044)	1	
- 3	AN320-3	NUT (88044)	1	
- 4	761680	PIN, stabilizer push rod	1	
- 5	AN310-5	NUT (88044)	2	
	MS24665-134	COTTER PIN (96906)	1	
- 5A	AN960-516	WASHER (88044)	2	
- 6	NAS1104-12D	BOLT (80205)	2	
- 7	AN320-4	NUT (88044)	2	
	MS24665-132	COTTER PIN (96906)	1	
- 8	NAS1104-14D	BOLT (80205)	1	
- 9	AN960D416	WASHER (88044)	2	
-10	AN320-4	NUT (88044)	1	
-11	MS21042L6	NUT (96906)	2	
-12	AN960D616L	WASHER (88044)	2	
-13	783634-1	BOLT, special close tolerance	2	
	799098-103	MECHANISM ASSY, stabilizer servo	1	
-14	NAS1105-34D	BOLT (80205)	1	
-15	AN960-516L	WASHER (88044)	1	
-16	AN320-5	NUT (88044)	1	
	MS24665-134	COTTER PIN (96906)	2	
-17	NAS1104-28D	BOLT (80205)	1	
-18	AN174CH12A	BOLT (88044)	1	
-19	AN174CH11A	BOLT (88044)	1	
-20	AN960D416	WASHER (88044)	1	
-21	783728-1	SHIM, stabilizer input linkage lever	1	
-22	783616-1	WASHER, stabilizer autopilot link	2	
-23	AN960D416L	WASHER (88044)	2	
-24	MS21042L4	NUT (96906)	2	
-24A	AN320-4	NUT (88044)	1	
-25	793528-3	LINKAGE ASSY, stabilizer input *(see fig. 27)*	1	
-26	783053-101	ACTUATOR ASSY, (B12) autopilot (see T.O. 9H2-4-130-4)	1	
-27	783740-103	ACTUATOR ASSY, (B9) automatic pitch (see T.O. 9H2-4-129-3)	1	
-28	635T100-11	ACTUATOR ASSY, (B11) electro-mechanical dual-input linear (A2898) (98889) (Lockheed spec dwg 669463-9) (see T.O. 8D1-8-194-4)	1	
-29	783602-1	LINK ASSY, stabilizer trim	1	
	DW4K2E5806	BEARING (21335)	2	
	783602-3	LINK, stabilizer trim	1	
-30	782073-7	SERVO ASSY, (B10) stabilizer power control (see T.O. 5A14-2-18-4)	1	
		Maintenance Components Only		
	MS28775-226	PACKING (96906) (NHA 783593-3)	2	
	LS4564-4	RING, backup (36659) (NHA 783593-3)	2	
	AC930E11	FILTER ELEMENT, hydraulic (01414) (Lockheed spec dwg 668288-1) (NHA 783593-3) (61431-3 or 21-10108 is an alternate)	2	
	61431-3	FILTER ELEMENT, hydraulic (81321) (Lockheed spec dwg 668288-1) (NHA 783593-3) (AC930E11 or 21-10108 is an alternate)	REF	
	21-10108	FILTER ELEMENT, hydraulic (81873) (Lockheed spec dwg 668288-1) (NHA 783593-3) (alternate for AC930E11 or 61431-3)	REF	
	MS28778-10	GASKET (96906) (NHA 783593-3)	2	
-31	783699-1	PIN, eccentric	2	
-32	783701-1	BOLT, stabilizer servo cylinder	2	
-33	AN4H4A	BOLT (88044)	2	
-34	783702-1	WASHER	2	
-35	783642-1	ROD ASSY, stabilizer cylinder push	2	
-36	783697-1	PIN, stabilizer servo upper	2	
-37	783698-1	RETAINER, stabilizer servo upper pin	2	
		Attaching Parts		
-38	NAS623-3-24	SCREW (80205)	1	

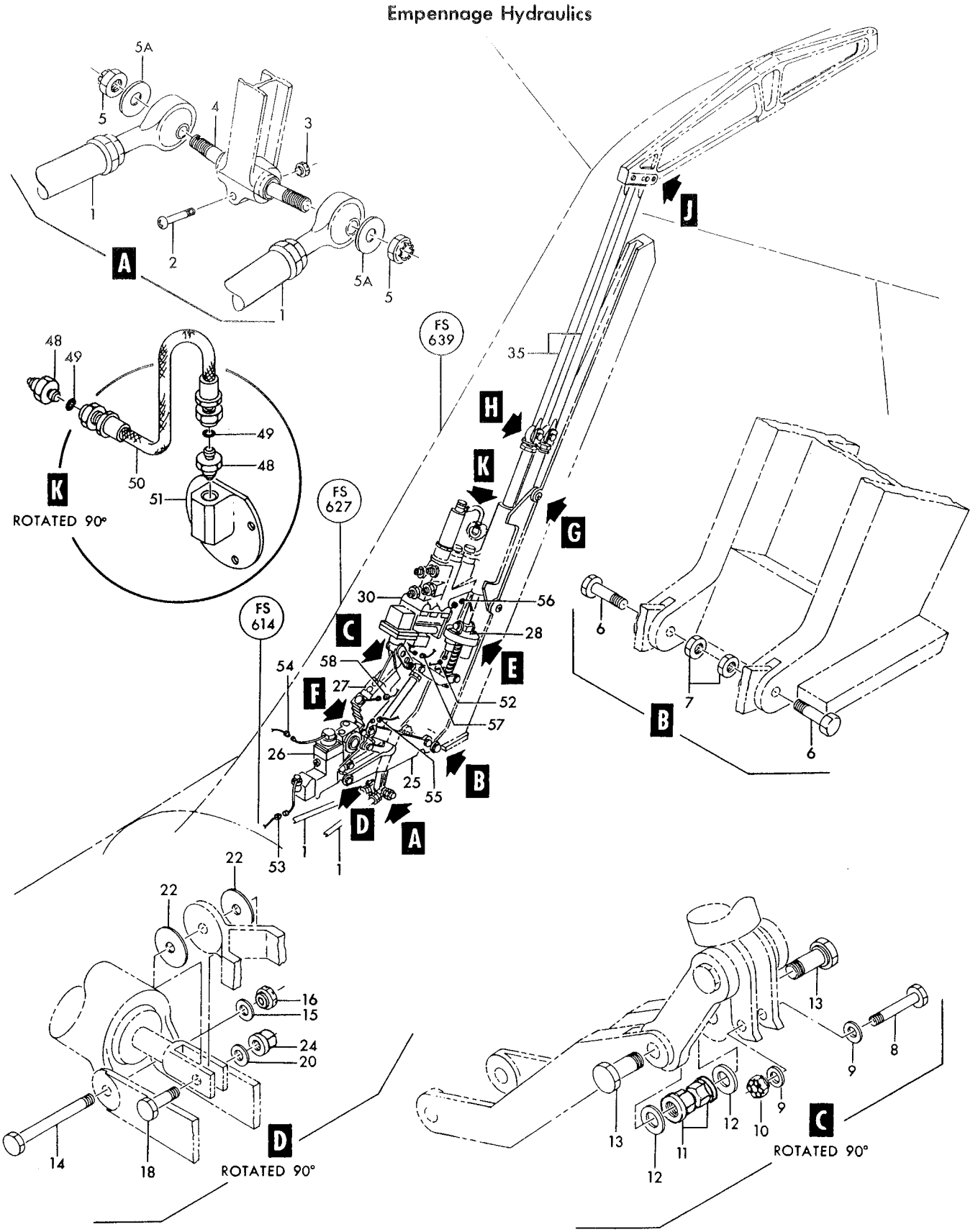

Figure 26— Stabilizer Actuating and Trim System (Sheet 1 of 2)

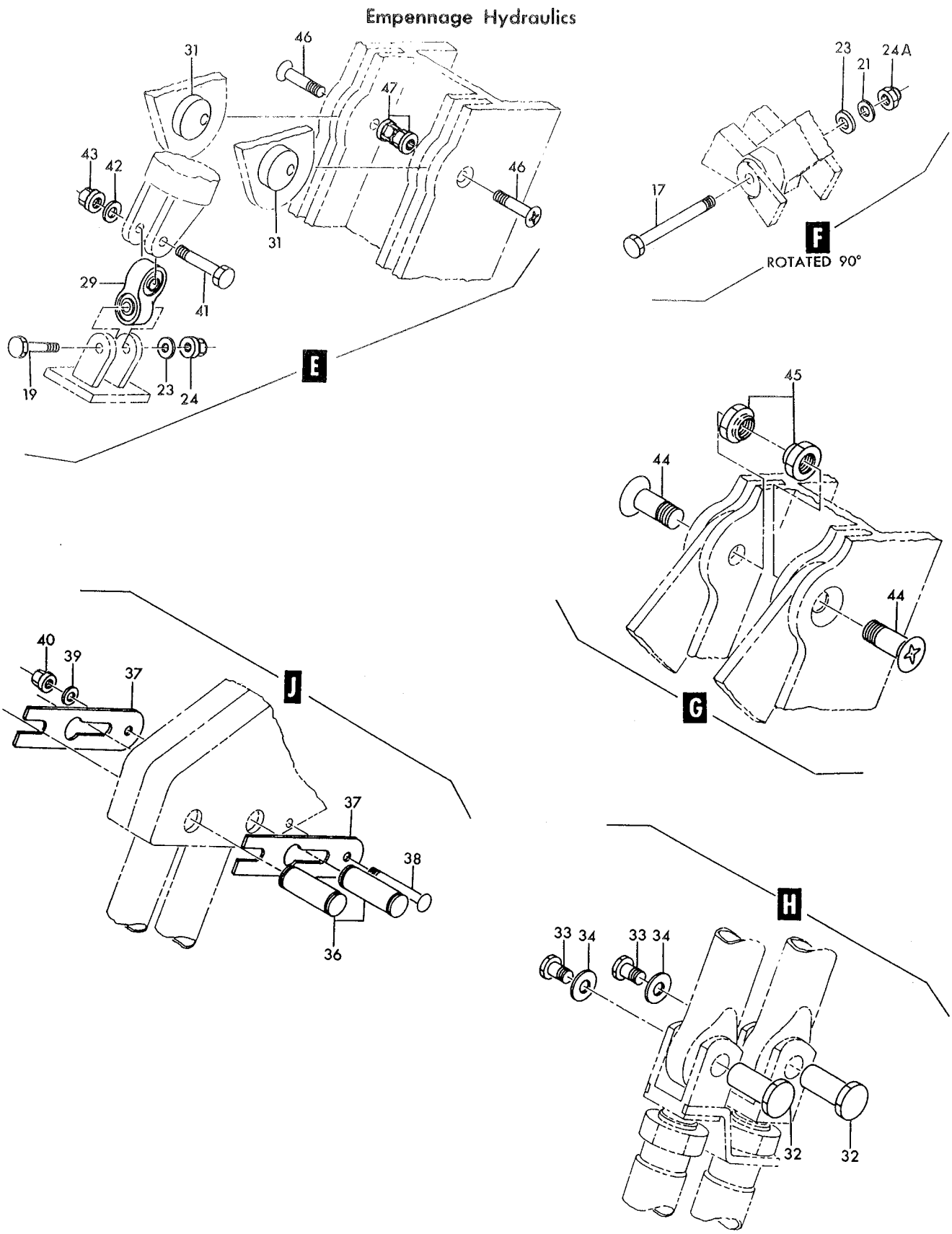

Figure 26—Stabilizer Actuating and Trim System (Sheet 2 of 2)

Figura e particolare	NDR	DENOMINAZIONE	Quant.	Codice applicab.
		1 2 3 4 5 6 7		
26-39	AN960D10	WASHER (88044)	1	
-40	MS21042L3	NUT (96906)	1	
-41	AN174CH13A	BOLT (88044)	1	
-42	AN960D416L	WASHER (88044)	1	
-43	MS21042L4	NUT (96906)	1	
-44	NAS1208-15	SCREW (80205)	2	
-45	NAS1022A8	NUT (80205)	2	
-46	NAS1205-13	SCREW (80205)	2	
-47	MS21042L5	NUT (96906)	2	
-48	792414-1	REDUCER, tube thread flared external	2	
-49	LS4634-2	GASKET, hydraulic (36659) (whn exh use NAS1596-2)	2	
	NAS1596-2	PACKING (80205) (use LS4634-2 until exh)	REF	
-50	AN6270-4-9	HOSE ASSY (88044)	1	
-51	792415-1	FLANGE, overboard drain *(see fig. 22 for reqd)*	REF	
	849510-101	HARNESS ASSY, tail section equipment *(see fig. 197 for reqd)*	REF	6701-6815
	852324-101	HARNESS ASSY, tail section equipment *(see fig. 197 for reqd)*	REF	6816-
-52	MS3112E12-10S	CONNECTOR, (J1) receptacle (stabilizer trim motor disconnect) (96906)	1	
-53	MS3112E10-6SW	CONNECTOR, (J48) receptacle (stabilizer parallel servo) (96906)	1	
-54	MS3112E10-6S	CONNECTOR, (J47) receptacle (stabilizer parallel servo) (96906)	1	
-55	PT02E8-2SW	CONNECTOR, (J52) receptacle (stabilizer parallel servo) (77820)	1	
-56	PT02E12-8S	CONNECTOR, (J50) receptacle (stabilizer servo) (77820)	1	
-57	MS3112E10-6S	CONNECTOR, (J47) receptacle (stabilizer servo) (96906)	1	
-58	PT02E8-2S	CONNECTOR, (J49) receptacle (stick pusher) (77820)	1	

Figura e particolare	NDR	DENOMINAZIONE 1 2 3 4 5 6 7	Quant.	Codice applicab.
		STABILIZER INPUT LINKAGE ASSEMBLY		
27	793528-3	LINKAGE ASSY, stabilizer input *(see fig. 26 for reqd)*	REF	
-1	NAS1304-29	BOLT (80205)	1	
-2	783617-9	BOLT, stabilizer servo mechanism	1	
-3	AN960D416L	WASHER (88044)	1	
-4	MS21042L4	NUT (96906)	2	
-5	783739-1	SPACER, stabilizer servo mechanism	2	
	783586-7	LEVER ASSY, stabilizer servo input	1	
-6	783586-9	ARM, stabilizer servo input (match comp do not stk sep)	1	
-7	783586-10	ARM, stabilizer servo input (match comp do not stk sep)	1	
-8	783586-5	BUSHING, plain	4	
-9	LS3859R4-6	BUSHING, plain (36659)	2	
-10	LS3859FR4-8	BUSHING, flanged line ream (36659)	2	
-11	KP4AE5806	BEARING (21335)	2	
-12	NAS333CP12A	BOLT (80205)	4	
-13	AN960D10L	WASHER (88044)	4	
-14	MS21042L3	NUT (96906)	4	
	783608-1	GIMBAL ASSY, stabilizer trim upper	1	
-15	783608-3	GIMBAL, stabilizer trim upper	1	
-16	KP4AE5806	BEARING (21335)	1	
	783609-1	GIMBAL ASSY, stabilizer trim lower	1	
-17	783609-3	GIMBAL, stabilizer trim lower	1	
-18	KP4AE5806	BEARING (21335)	1	
-19	783633-1	PIN, gimbal attachment	2	
-20	783617-5	BOLT, stabilizer servo mechanism	1	
-21	AN960D416L	WASHER (88044)	1	
-22	MS21042L4	NUT (96906)	1	
	783730-5	LINK ASSY, stabilizer servo input	1	
-23	NAS509-6	NUT (80205)	2	
-24	NAS460-616	WASHER (80205)	1	
-25	MR4CA	ROD END (77896)	2	
-26	783741-1	LOCK, stabilizer link	1	
	MS24665-132	COTTER PIN (96906)	1	
-27	AN320-4	NUT (88044)	1	
-28	NAS1104-32D	BOLT (80205)	1	
-29	NAS502-4	BEARING (80205)	2	
	794783-1	FITTING ASSY, stabilizer servo input linkage	1	
-30	783729-1	BUSHING, stabilizer servo input linkage	1	
-31	794783-3	FITTING, stabilizer servo input linkage	1	
-32	823185-1	PELLET, stabilizer servo input linkage	1	
-33	783732-1	PISTON, stabilizer servo input linkage	1	
-34	783735-1	SPRING, stabilizer servo input linkage	1	
-35	783731-1	BARREL, stabilizer servo input linkage	1	
-36	AN501AD10-8	SCREW (88044)	1	
-37	783615-1	LOCK, stabilizer feel spring	1	
-38	783613-1	SCREW, stabilizer feel spring adjustment	1	
-39	783611-1	GUIDE, stabilizer feel spring	1	
-40	MS134356	BALL (96906) (intrchg wth 100200-0102)	1	
	100200-0102	BALL (95888) (intrchg wth MS134356)	REF	
-41	783720-1	SPRING, stabilizer feel	1	
-42	783610-1	GUIDE ASSY, stabilizer feel spring	1	
	KS4AFS137	BEARING (21335)	1	
-43	783617-5	BOLT, stabilizer servo mechanism	1	
-44	AN960-416L	WASHER (88044)	1	
-45	MS21042L4	NUT (96906)	1	
-46	NAS1106-38D	BOLT (80205)	1	
-47	AN960D616	WASHER (under bolt head) (88044)	1	
-48	728596-1	WASHER, laminated aluminum flat (used to maintain clearance)	AR	
-49	MS21042L6	NUT (96906)	1	
-50	AN174CH24A	BOLT (88044)	1	

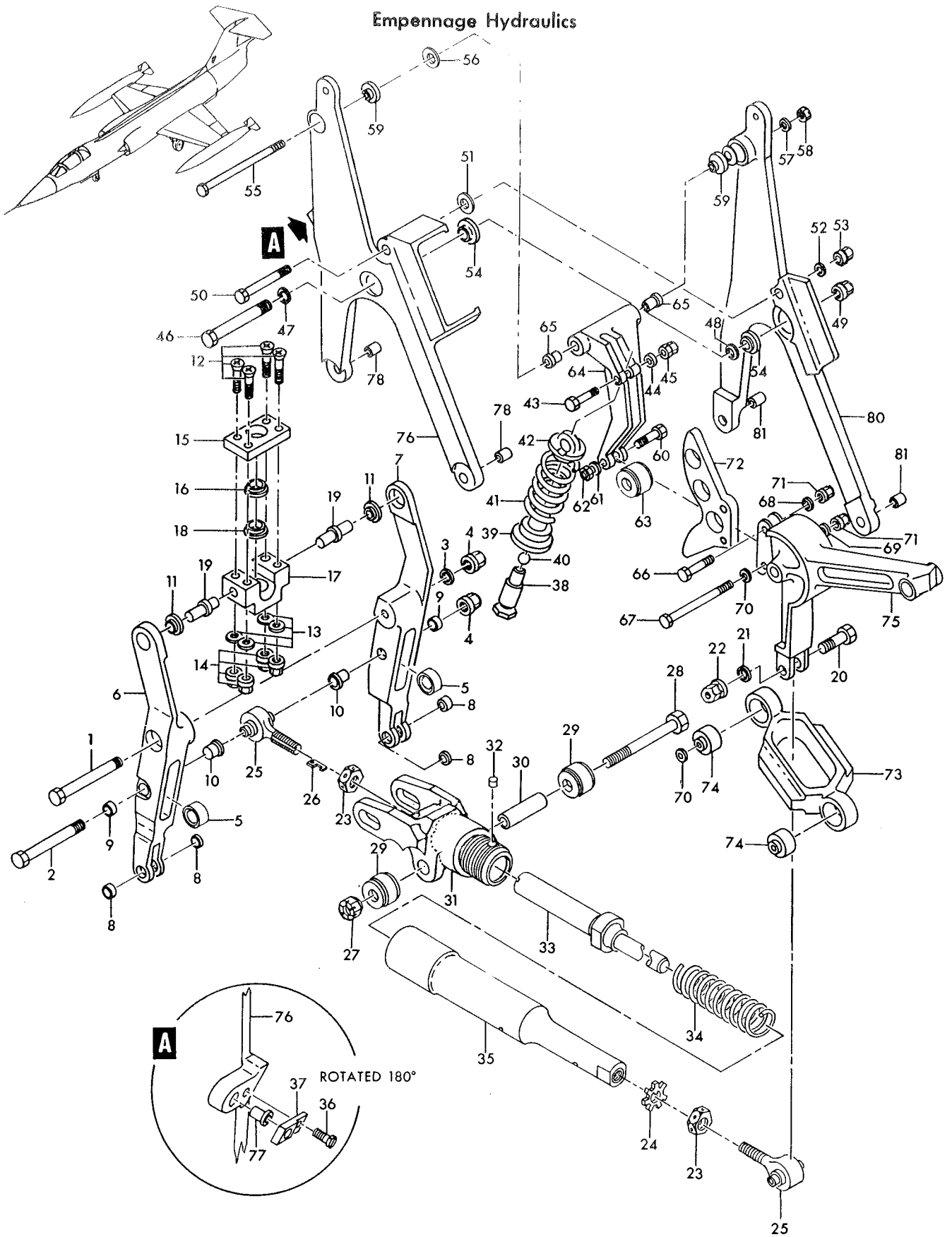

Figure 27—Stabilizer Input Linkage Assembly

Figura e particolare	NDR	DENOMINAZIONE	Quant.	Codice applicab.
27-51	783728-1	SHIM, stabilizer input linkage lever	AR	
-52	AN960D416L	WASHER (88044)	1	
-53	MS21042L4	NUT (96906)	1	
-54	KP6AE5806	BEARING (21335)	2	
-55	NAS1104-50D	BOLT (80205)	1	
-56	783728-1	SHIM, stabilizer input linkage lever	AR	
-57	AN960D416	WASHER (88044)	1	
-58	AN320-4	NUT (88044)	1	
-59	KP4AE5806	BEARING (21335)	2	
-60	783617-3	BOLT, stabilizer servo mechanism	1	
-61	AN960D416L	WASHER (88044)	1	
-62	MS21042L4	NUT (96906)	1	
-63	NAS502-4	BEARING (80205)	1	
	783581-1	LEVER ASSY, stabilizer feel cam	1	
-64	783581-3	. LEVER, stabilizer feel cam	1	
-65	NAS77-4-25	. BUSHING (80205)	2	
-66	783617-1	BOLT, stabilizer servo mechanism	1	
-67	783617-7	BOLT, stabilizer servo mechanism	1	
-68	AN960D416	WASHER (88044)	1	
-69	AN960D416L	WASHER (88044)	1	
-70	783616-1	WASHER, stabilizer servo mechanism	2	
-71	MS21042L4	NUT (96906)	2	
-72	783711-3	CAM, stabilizer feel	1	
	783620-1	LINK ASSY, autopilot actuator	1	
-73	783620-3	. LINK, autopilot actuator	1	
-74	GDSRP4E5806	. BEARING (21335)	2	
-75	783583-1	CRANK, stabilizer input pivot	1	
	793526-1	SUPPORT ASSY, stabilizer input pivot LH	1	
-76	793526-3	. SUPPORT, stabilizer input pivot LH	1	
-77	KNH624	. INSERT (98004)	1	
-78	NAS75-4-008	. BUSHING (80205)	2	
	793527-1	SUPPORT ASSY, stabilizer input pivot RH	1	
-80	793527-3	. SUPPORT, stabilizer input pivot RH	1	
-81	NAS75-4-008	. BUSHING (80205)	2	

Figura e particolare	NDR	DENOMINAZIONE 1 2 3 4 5 6 7	Quant.	Codice applicab.
		RUDDER POWER CONTROL AND PIPING		
28	784021-7	. PLUMBING INSTL, rudder servo *(see fig. 19 for reqd)*	REF	
-1	762303-37	. . TUBE ASSY, system No. 1 hydraulic pressure	1	
-2	762303-39	. . TUBE ASSY, system No. 2 hydraulic pressure	1	
-3	762303-53	. . TUBE ASSY, system No. 1 hydraulic return	1	
-4	786344-51	. . TUBE ASSY, system No. 2 hydraulic return	1	
-5	762303-59	. . TUBE ASSY, system No. 1 left rudder pressure	1	
-6	762303-61	. . TUBE ASSY, system No. 1 right rudder pressure	1	
-7	762303-63	. . TUBE ASSY, system No. 2 left rudder pressure	1	
-8	762303-65	. . TUBE ASSY, system No. 2 right rudder pressure	1	
-8A	786344-45	. . TUBE ASSY, system No. 1 left rudder pressure	1	
-9	762303-69	. . TUBE ASSY, system No. 1 right rudder pressure	1	
-10	762303-71	. . TUBE ASSY, system No. 2 left rudder pressure	1	
-11	762303-73	. . TUBE ASSY, system No. 2 right rudder pressure	1	
-11A	MS21904D4	. . ELBOW (96906)	3	
-11B	MS21902D4	. . UNION (96906)	1	
	783041-103	. SERVO INSTL, rudder power control *(see fig. 19 for reqd)*	REF	
-12	NAS1104-8D	. . BOLT (80205)	1	
-13	AN320-4	. . NUT (88044)	2	
-14	NAS1104-12D	. . BOLT (80205)	1	
-15	AN960D416	. . WASHER (88044)	1	
-16	769712-1	. . TIE ROD ASSY, rudder servo	1	
-17	769712-3	. . . TIE ROD, rudder servo	1	
-18	769850-1	. . . FORK, rudder servo tie rod	1	
-19	NAS509L6	. . . NUT (80205)	1	
-20	BRE4095L	. . . ROD END, self-aligning type (81376)	1	
-21	NAS509-6	. . . NUT (80205)	1	
-22	NAS1104-14D	. . BOLT (80205)	2	
-23	AN320-4	. . NUT (88044)	2	
-24	AN960D416	. . WASHER (88044)	2	
-25	783932-1	. . ROD ASSY, rudder servo input	1	
-26	783931-1	. . . ROD, rudder servo input	1	
-27	RE4M6	. . . BEARING, male anti-friction rod end (21335)	1	
-28	NAS509-6	. . . NUT (80205)	1	
-29	RE4ML6	. . . BEARING, male anti-friction rod end (21335)	1	
-30	NAS509L6	. . . NUT (80205)	1	
-31	783995-1	. . PIVOT, rudder servo input	1	
-32	AN320-6	. . NUT (88044) (NHA 797816-1)	1	
-33	AN960-616	. . WASHER (88044) (NHA 797816-1)	1	
	MS24665-285	. . COTTER PIN (96906) (NHA 797816-1)	1	
-34	727407-1	. . BOLT, rudder servo special	1	
	MS24665-134	. . COTTER PIN (96906)	2	
-35	AN320-4	. . NUT (88044)	1	
-36	AN960D416	. . WASHER (88044)	1	
-37	783992-1	. . BEAM ASSY, rudder servo walking (NHA 797816-1)	1	
	G8105PS	. . . BEARING (60380)	2	
	783992-3	. . . BEAM, rudder servo walking	1	
-38	NAS1104-12D	. . BOLT (80205)	1	
-39	AN320-4	. . NUT (88044)	1	
-40	AN960D416	. . WASHER (88044)	1	
-41	783933-1	. . ROD ASSY, rudder servo follow up	1	
-42	AN502-10-10	. . SCREW (88044)	3	
-43	783993-1	. . LEVER, rudder trim actuator	1	
-44	783994-1	. . FORK ASSY, rudder trim actuator output	1	
-45	S814FCHHLG31	. . . BEARING, ball (40920)	2	
	814FCHH	. . . BEARING, ball (40920)	2	
-46	793270-3	. . CYLINDER ASSY, rudder servo (*see* T.O. 9H2-4-126-14)	1	
-47	793270-1	. . CYLINDER ASSY, rudder servo (*see* T.O. 9H2-4-126-14)	1	

Empennage Hydraulics

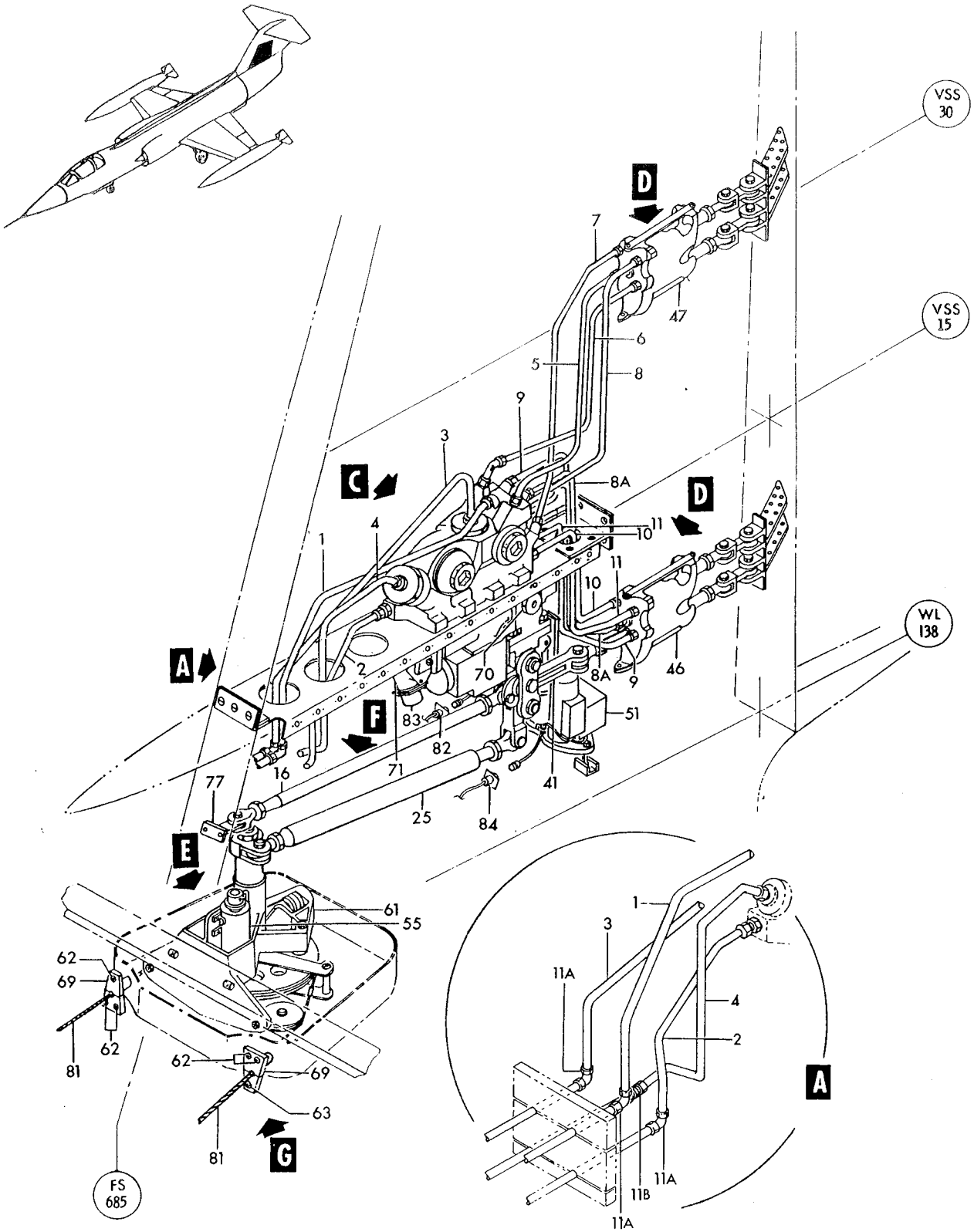

Figure 28— Rudder Power Control and Piping (Sheet 1 of 2)

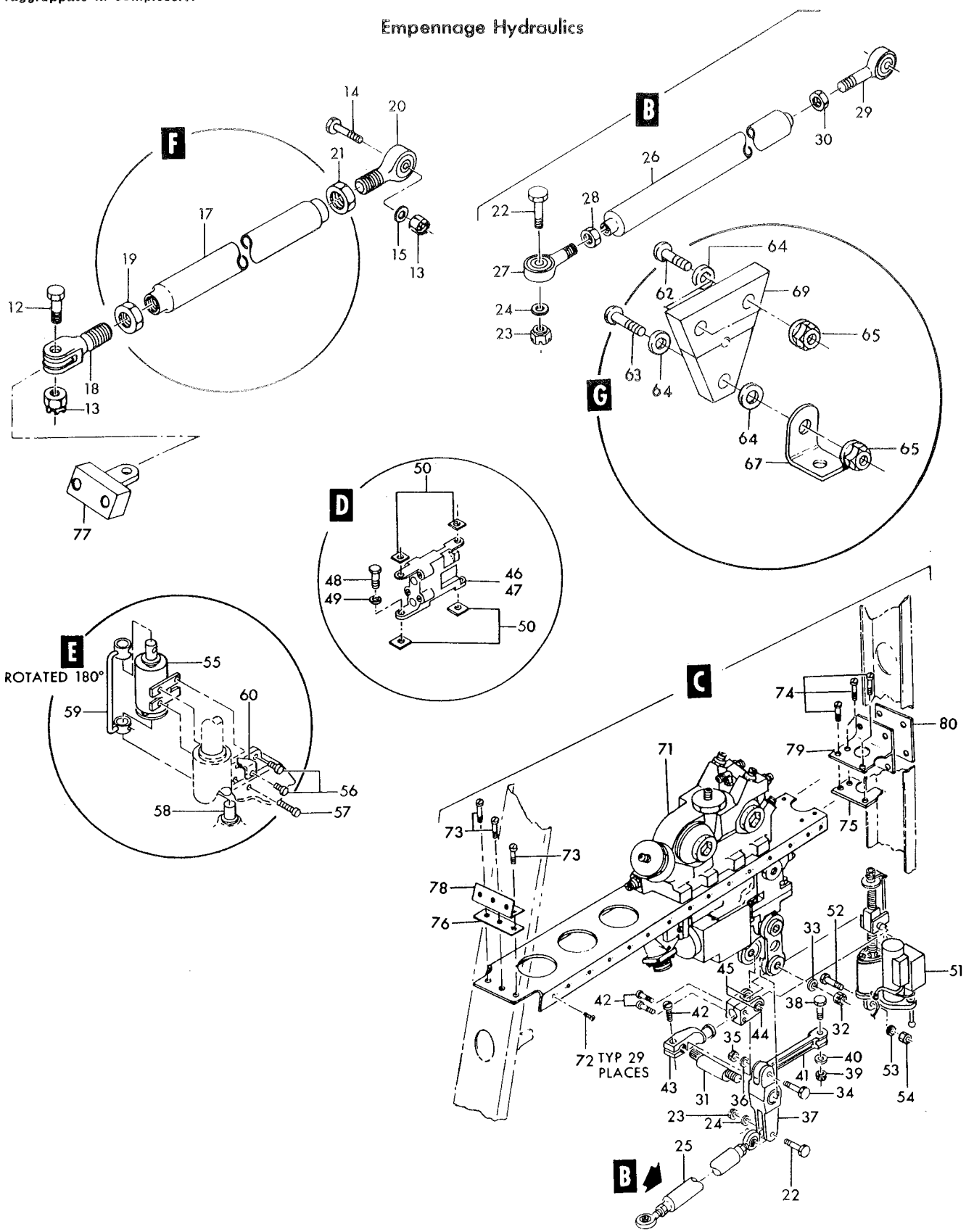

Figure 28— Rudder Power Control and Piping (Sheet 2 of 2)

Figura e particolare	NDR	1 2 3 4 5 6 7 DENOMINAZIONE	Quant.	Codice applicab.
		Attaching Parts		
28-48	NAS1104-4	BOLT (80205)	4	
-49	LS6061-416L	WASHER, plain (36659)	4	
-50	770620-3	SHIM, rudder actuating cylinder	4	
-51	647T100-5	ACTUATOR, (B8) electro-mechanical linear (A2898) (98889) (Lockheed spec dwg 669464-3) (see T.O. 8C1-8-195-4)	1	
		Attaching Parts		
-52	AN173-10	BOLT (88044)	1	
-53	AN960D10	WASHER (88044)	1	
-54	AN320-3	NUT (88044)	1	
	MS24665-132	COTTER PIN (96906)	1	
-55	11512-31	SOLENOID, travel limiter (07797) (Lockheed spec dwg 619342-1)	1	
		Attaching Parts		
-56	AN502-10-8	SCREW (88044)	2	
-57	AN502-10-16	SCREW (88044)	1	
-58	783360-1	PIN, rudder limiter solenoid extension	1	
-59	791527-1	LINK ASSY, rudder travel limiter	1	
-60	791581-1	STOP, rudder travel limiter link	1	
-61	783180-3	QUADRANT ASSY, rudder servo *(see fig. 25)*	1	
-62	AN520-10R10	SCREW (88044)	5	
-63	AN520-10R14	SCREW (88044)	1	
-64	AN960-10	WASHER (used for alignment) (88044)	AR	
-65	MS21042L3	NUT (96906)	6	
-67	AN743BC12	BRACKET (88044)	1	
-69	770621-101	SEAL ASSY, rudder cable quadrant pan	2	
-70	762079	COVER, bleed plug access	1	
-71	784149-103	MECHANICAL HYDRAULIC ASSY, (B7) rudder servo (see T.O. 9H2-4-73-34)	1	
		Attaching Parts		
-72	NAS1204-3	SCREW (80205)	29	
-73	NAS623-3-4	SCREW (80205)	3	
-74	NAS623-3-6	SCREW (80205)	3	
-75	769680-1	SHIM, vertical stabilizer manifold aft	1	
-76	769679-1	SHIM, vertical stabilizer manifold fwd	1	
		Maintenance Components Only		
	MS28775-226	PACKING (96906) (NHA 784149-3)	2	
	LS4564-4	RING, backup (36659) (NHA 784149-3)	2	
	AC930E11	FILTER ELEMENT, hydraulic (01414) (Lockheed spec dwg 668288-1) (NHA 784149-3) (61431-3 or 21-10108 is an alternate)	2	
	61431-3	FILTER ELEMENT, hydraulic (81321) (Lockheed spec dwg 668288-1) (NHA 784149-3) (AC930E11 or 21-10108 is an alternate)	REF	
	21-10108	FILTER ELEMENT, hydraulic (81873) (Lockheed spec dwg 668288-1) (NHA 784149-3) (alternate for AC930E11 or 61431-3)	REF	
	LS4634-10	GASKET (36659) (NHA 784149-3) (whn exh use NAS1596-10)	2	
	NAS1596-10	PACKING (80205) (NHA 784149-3) (use LS4634-10 until exh)	REF	
	783299-101	STRUCTURE ASSY, vertical stabilizer aft *(see fig. 21 for reqd)*	REF	
-77	769529-1	FITTING, rudder servo tie rod *(see fig. 21 for reqd)*	REF	
-78	770529-1	CLIP, stabilizer clampblock support	1	
-79	769682-1	CLIP, vertical stabilizer aft manifold support	1	
-80	769681-1	SHIM, vertical stabilizer manifold to beam	1	
-81	768498-103	CABLE ASSY, rear rudder *(see fig. 67 for reqd)*	REF	6701-6830
	768498-105	CABLE ASSY, rear rudder *(see fig. 67 for reqd)*	REF	6831-
	849509-101	HARNESS ASSY, tail section P31 disconnect to rudder controls *(see fig. 197 for reqd)*	REF	
-82	MS3112E10-6S	CONNECTOR, (J47) receptacle (96906)	1	
-83	MS25183-16S1S	CONNECTOR, (P54) plug (96906)	1	
-84	MS3112E10-6SW	CONNECTOR, (J48) receptacle (rudder trim motor) (96906)	1	

Figura e particolare	NDR	1 2 3 4 5 6 7 DENOMINAZIONE	Quant.	Codice applicab.
		STABILIZER ACTUATOR AND SERVO PIPING		
29	784021-1	PLUMBING INSTL, dorsal fin (NHA 849071-101)	1	
-1	777486-1	TUBE ASSY, system No. 1 hydraulic pressure *(see fig. 124)*	1	
-2	777486-3	TUBE ASSY, system No. 1 hydraulic return *(see fig. 124)*	1	
-3	777486-5	TUBE ASSY, system No. 2 hydraulic return *(see fig. 124)*	1	
-4	777486-7	TUBE ASSY, system No. 2 hydraulic pressure *(see fig. 124)*	1	
-5	5502L13B6L	SOCKET, hydraulic coupling (A1577) (79326) (Lockheed spec dwg 668094-9)	4	
		Partial Breakdown Follows		
	MS28782-10	RING (96906)	2	
	G13-112	PACKING, o ring (79326)	2	
-6	773268-1	CLAMPBLOCK ASSY, aft fuselage disconnect	1	
		Attaching Parts		
	NAS517-3-8	SCREW (80205)	3	
	NAS517-3-15	SCREW (80205)	1	
	NAS623-3-8	SCREW (80205)	1	
	MS21042L3	NUT (96906)	5	
	784021-3	PLUMBING INSTL, stabilizer servo *(see fig. 19 for reqd)*	REF	
-7	5502L95B6	NIPPLE, hydraulic coupling (A1577) (79326) (Lockheed spec dwg 668094-11)	4	
		Partial Breakdown Follows		
	3YN30-6-10	SEAL (79326)	1	
	MS28782-7	RING (96906)	1	
	3Y13-12	PACKING, o ring (79326)	1	
	AN924-6D	NUT (88044)	4	
-8	773224-1	PROBE ASSY, aft fuselage disconnect clampblock	1	
-9	786344-111	TUBE ASSY, system No. 1 hydraulic pressure	1	
-10	ER804D060604	A. TEE, reducer (79470)	1	6701-6740
	AS1003-060604	B. TEE, reducer (79470)	1	
	AN6289D6	A. NUT (88044)	1	6701-6740
	AN6289-6	B. NUT (88044)	1	
	LS4764-6	RING, hydraulic backup (36659)	1	
	LS4634-6	GASKET, straight thread tube fitting (36659) (whn exh use NAS1596-6)	1	
	NAS1596-6	PACKING (80205) (use LS4634-6 until exh)	REF	
-11	786344-81	TUBE ASSY, system No. 1 hydraulic pressure	1	
-12	786344-13	TUBE ASSY, system No. 1 hydraulic return	1	
-13	TA4C74S6T	CLAMP (84971)	2	
		Attaching Parts		
	NAS603-10	SCREW (80205)	1	
	MS21042L3	NUT (96906)	1	
-14	ER824D060604	TEE, reducer (79470)	3	
-15	786344-19	TUBE ASSY, system No. 1 hydraulic return	1	
-16	786344-21	TUBE ASSY, system No. 1 hydraulic return	1	
-17	786344-15	TUBE ASSY, system No. 1 hydraulic return	1	
-18	MS21909D4	TEE (96906)	1	
	AN6289D4	NUT (88044)	1	
	LS4764-4	RING, hydraulic backup (36659)	1	
	LS4634-4	GASKET, straight thread tube fitting (36659) (whn exh use NAS1596-4)	1	
	NAS1596-4	PACKING (80205) (use LS4634-4 until exh)	REF	
-19	786344-17	TUBE ASSY, system No. 1 hydraulic return	1	
-20	MS21902D4	UNION (96906)	2	
	LS4634-4	GASKET, straight thread tube fitting (36659) (whn exh use NAS1596-4)	2	
	NAS1596-4	PACKING (80205) (use LS4634-4 until exh)	REF	
-21	786344-23	TUBE ASSY, system No. 1 hydraulic return	1	
-22	786344-33	TUBE ASSY, system No. 2 hydraulic return	1	
-23	ER824D060604	TEE, reducer (79470)	2	
-24	786344-35	TUBE ASSY, system No. 2 hydraulic return	1	
-26	786344-95	TUBE ASSY, system No. 2 hydraulic return	1	
-27	786344-27	TUBE ASSY, system No. 2 hydraulic pressure	1	
-28	786344-29	TUBE ASSY, system No. 2 hydraulic pressure	1	

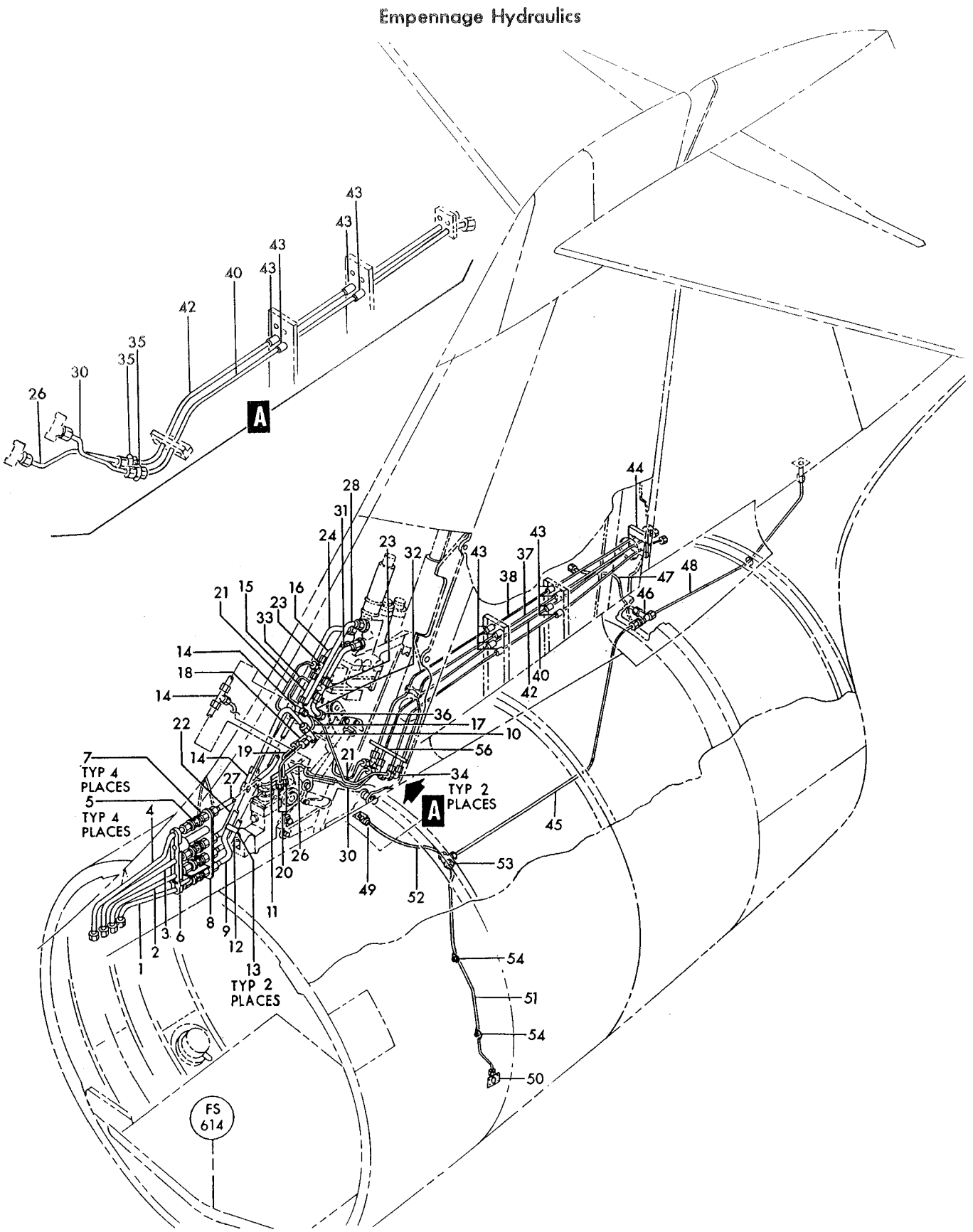

Figure 29— Stabilizer Actuator and Servo Piping

Figura e particolare	NDR	DENOMINAZIONE 1 2 3 4 5 6 7	Quant.	Codice applicab.
29-30	786344-91	TUBE ASSY, system No. 2 hydraulic pressure	1	
-31	786344-7	TUBE ASSY, system No. 1 hydraulic pressure	1	
-32	786344-5	TUBE ASSY, system No. 1 hydraulic pressure	1	
-33	786344-9	TUBE ASSY, system No. 1 hydraulic pressure	1	
-34	MS21904D4	ELBOW (96906)	2	
-35	MS21902D4	UNION (96906)	2	
-36	MS21902D6	UNION (96906)	1	
	LS4634-6	GASKET, straight thread tube fitting (36659) (whn exh use NAS1596-6)	1	
	NAS1596-6	PACKING (80205) (use LS4634-6 until exh)	REF	
	784021-5	PLUMBING INSTL, vertical stabilizer *(see fig. 21 for reqd)*	REF	
-37	786344-11	TUBE ASSY, system No. 1 hydraulic pressure	1	
-38	786344-25	TUBE ASSY, system No. 1 hydraulic return	1	
-40	786344-93	TUBE ASSY, system No. 2 hydraulic pressure	1	
-42	786344-97	TUBE ASSY, system No. 2 hydraulic return	1	
-43	762302	SPACER, hydraulic tube support	2	
-44	727474-1	CLAMPBLOCK ASSY, stabilizer hydraulic tubing	1	
	AN520-10R48	SCREW (88044)	2	
	AN960D10	WASHER (88044)	2	
	MS21042L3	NUT (96906)	2	
	784021-101	PULMBING INSTL, stabilizer drain *(see fig. 32 for reqd)*	REF	
-45	786344-43	TUBE ASSY, drain	1	
-46	MS21912-4	TEE (96906)	1	
	AN924-4	NUT (88044)	1	
-47	786344-41	TUBE ASSY, drain	1	
-48	786344-39	TUBE ASSY, drain	1	
	770534-1	DRAIN INSTL, aft fuselage hydraulic RH *(see fig. 32 for reqd)*	REF	
-49	726373-3	FITTING, drain	1	
	726378-3	GASKET, drain	1	
	770534-3	FITTING INSTL, aft fuselage hydraulic overboard drain LH *(see fig. 32 for reqd)*	REF	
-50	726373-3	FITTING, drain	1	
	726378-3	GASKET, drain	1	
	770534-5	PLUMBING INSTL, aft fuselage hydraulic drain *(see fig. 32 for reqd)*	REF	
-51	762303-75	TUBE ASSY, aft fuselage drain	1	
-52	762303-77	TUBE ASSY, aft fuselage drain	1	
	AN960D716	WASHER (88044)	1	
	AN924-4D	NUT (88044)	1	
-53	MS21909D4	TEE (96906)	1	
	MS21042L3	NUT (96906)	2	
	NAS623-3-1	SCREW (80205)	2	
-54	TA4C74S4T	CLAMP, loop type support (84971)	2	
-56	799151-101	CLAMPBLOCK ASSY, vertical fin plumbing *(see fig. 21 for reqd)*	REF	
		Attaching Parts		
	NAS623-3-9	SCREW (80205)	3	
	NAS620A10L	WASHER (80205)	3	
	MS21042L3	NUT (96906)	3	

*

A - Removed per AA.1F-104-OT-605A
B - Reqd per AA.1F-104-OT-605A

Figura e particolare	NDR	1 2 3 4 5 6 7	DENOMINAZIONE	Quant.	Codice applicab.
			FUSELAGE STATION 184 TO 358 STRUCTURE INSTALLATION		
30	849142-101		STRUCTURE INSTL, fuselage station 184 to 358 (NHA 849141-101)	1	
-1	763978		PLATE INSTL, leveling *(see fig. 39)*	1	
-2	785989-3		SEAL INSTL, case stowage compartment *(see fig. 230)*	1	
	783269-9	A.	SEAL INSTL, case stowage compartment *(see fig. 230)*	1	
-3	783501-501	A.	PARTITION INSTL, fuselage station 346 removable case stowage bay *(see fig. 39)*	1	
-4	783980-1		TORQUE TUBE INSTL, fuselage station 255 bulkheand canopy release *(see fig. 208)*	1	
-5	784259-3		CLEVIS INSTL, nasarr nose *(see fig. 35)*	1	
-7	851205-103		FLOOR INSTL, auxiliary fuel tank *(see fig. 39)*	1	
-8	784461-5		STATIC TUBE INSTL, cockpit and electronic compartment pressure equipment *(see fig. 145)*	1	
-9	793283-1		BEAM INSTL, fuselage station 255 to 259 cross *(see fig. 48)*	1	
-10	760163-115	A.	COVER INSTL, fuselage station 335 bulkhead *(see fig. 39)*	1	
-11	760163-117	A.	COVER INSTL, fuselage station 335 bulkhead *(see fig. 39)*	1	
-12	760163-119	A.	COVER INSTL, fuselage station 335 bulkhead *(see fig. 39)*	1	
-13	850129-101		FAIRLEAD INSTL, ammunition compartment crossover conduit LH *(see fig. 39)*	1	
-14	850129-103		FAIRLEAD INSTL, ammunition compartment crossover conduit RH *(see fig. 39)*	1	
-14A	851102-103		WAVEGUIDE BRKT INSTALLATION, sta 184,0 to klystron transmitter *(see fig. 174)*	1	
	849142-107		STRUCTURE INSTL, fuselage station 184 to 358 side panel LH	1	
	849142-109		STRUCTURE INSTL, fuselage station 184 to 358 side panel RH	1	
-15	849906-101		ELECTRICAL INSTL, RH electrical bay *(see fig. 38, 173 and 174)*	1	
-16	784890-5		ELBOW INSTL, cabin discharge air (LH only) *(see fig. 138)*	1	
-17	849902-101		ELECTRICAL INSTL, LH cockpit *(see fig. 159)*	1	
-18	849903-101		ELECTRICAL INSTL, RH cockpit *(see fig. 160)*	1	
-19	792794-101		PLUMBING INSTL, canopy jettison (RH only) *(see fig. 210)*	1	
-20	761578-3		HINGE INSTL, electronic compartment cover (LH only) *(see fig. 48)*	1	
-21	761578-5		RETAINER INSTL, electronic compartment cover (RH only) *(see fig. 48)*	1	
-22	761578-507		RETAINER AND FAIRING INSTL, electronic compartment cover (LH only) *(see fig. 48)*	1	
-23	762848-3		CATCH INSTL, electronic compartment cover (RH only) *(see fig. 48)*	1	
-24	764478-4L		FITTING INSTL, anti-personnel screen LH *(see fig. 39)*	1	
-25	764478-4R		FITTING INSTL, anti-personnel screen RH *(see fig. 39)*	1	
-26	773426-501		TUBE INSTL, gun compartment purge air supply (LH only) *(see fig. 147)*	1	
	773426-1	A.	TUBE INSTL, gun compartment purge air supply (LH only) *(see fig. 147)*	1	
-27	774030-101		ADAPTER INSTL, single point pressure fueling (LH only) *(see fig. 96)*	1	
-28	774030-3		TUBE INSTL, single point pressure fueling (LH only) *(see fig. 96)*	1	
-29	774030-5		DRAIN PORT INSTL, single point pressure fueling (LH only) *(see fig. 96)*	1	
-30	798566-101	A.	ELECTRICAL INSTL, gun compartment (LH only) *(see fig. 185)*	1	
-31	776561-1		COVER INSTL, RH fus sta 212 to 225 control cable *(see fig. 235)*	1	
-32	778143-1		COVER INSTL, LH fus sta 289 to 305 gun compartment purge box *(see fig. 148)*	1	
-32A	777169-101	A.	PURGE INSTL, armament compartment (LH only) *(see fig. 148)*	1	
-33	777169-505		COVER INSTL, armament compartment (LH only) *(see fig. 148)*	1	
-34	784004-3		PLUMBING INSTL, cockpit brake (LH only) *(see fig. 115)*	1	
-35	783021-101		RELEASE MECHANISM INSTL, canopy hinge (LH only) *(see fig. 207)*	1	
-36	783028-101		LATCH MECHANISM INSTL, canopy hinge (RH only) *(see fig. 204)*	1	
-37	783109-101		CONTROL INSTL, LH forward panel *(see fig. 63)*	1	6701-6740
	783109-103		CONTROL INSTL, LH forward panel *(see fig. 63)*	1	6741-6765
	783109-105		CONTROL INSTL, LH forward panel *(see fig. 63)*	1	6766-
-38	783322-103		CONTROL INSTL, RH forward panel *(see fig. 63)*	1	6701-6765
	783322-105		CONTROL INSTL, RH forward panel *(see fig. 63)*	1	6766-
-39	784211-3		BOOT INSTL, fuselage station 335 bleed air (RH only) *(see fig. 152)*	1	
-40	784238-3		SEAL AND RETAINER INSTL, canopy (LH only) *(see fig. 203)*	1	
-41	849907-101		ELECTRICAL INSTL, LH fuselage station 255 to 358 wiring and equipment *(see fig. 178 and 189)*	1	

Fuselage Complete

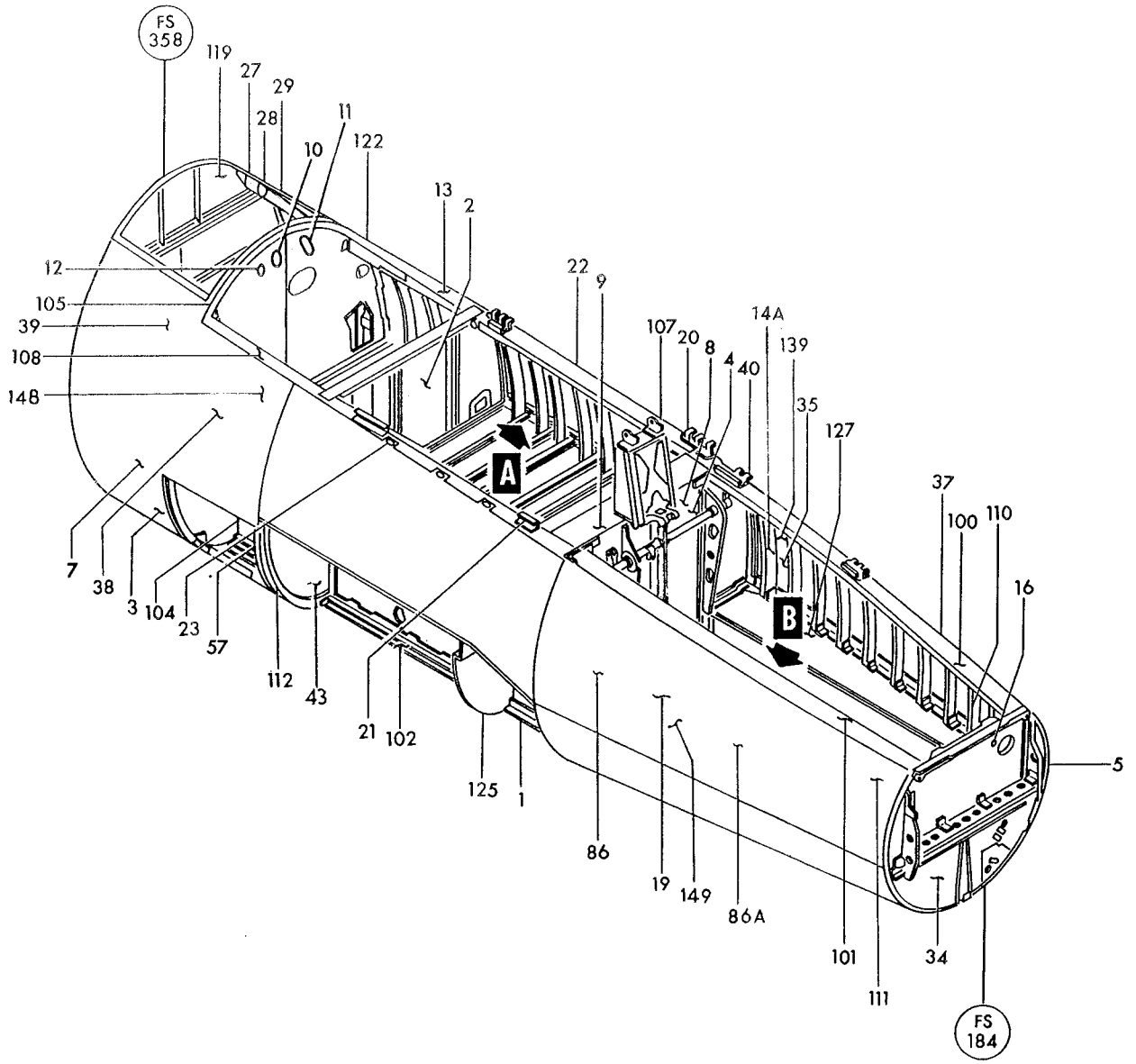

Figure 30—Fuselage Station 184 to 358 Structure Installation (Sheet 1 of 2)

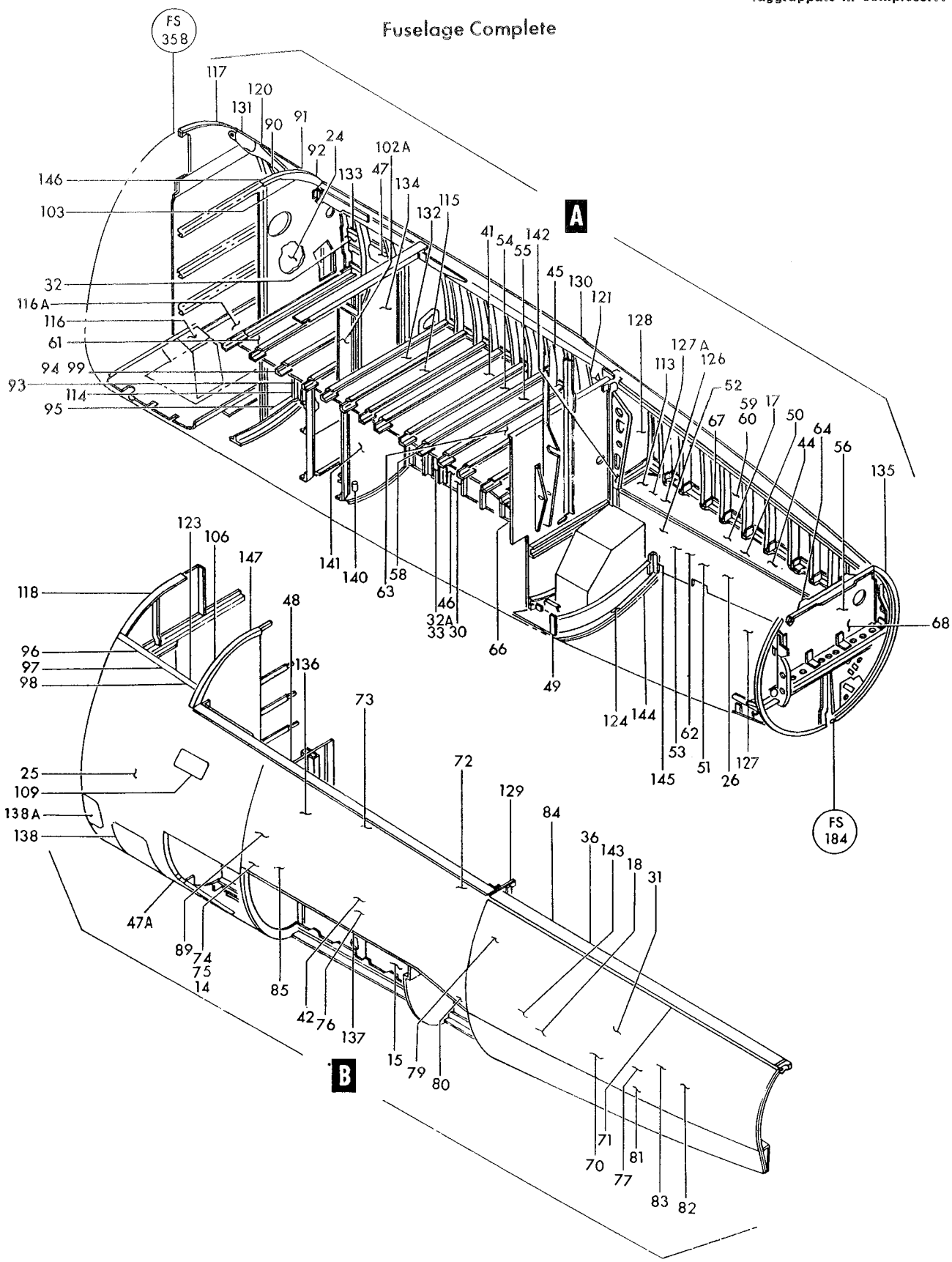

Figure 30—Fuselage Station 184 to 358 Structure Installation (Sheet 2 of 2)

Figura e particolare	NDR	1	2	3	4	5	6	7	DENOMINAZIONE	Quant.	Codice applicab.
30-42	849908-101								ELECTRICAL INSTL, RH fuselage station 255 to 358 wiring and equipment *(see fig. 180)*	1	
-43	784262-1	A.							ARMAMENT INSTL (LH only) *(see fig. 228)*	1	
-44	849922-101	B.							ELECTRICAL INSTL, gun bay (LH only) *(see fig. 184)*	1	
	851215-101	A.							ELECTRICAL INSTL, gun bay (LH only) *(see fig. 184)*	1	
	851215-103	A.							ELECTRICAL INSTL, fuel tank (LH only) *(see fig. 184)*	1	
-45	784694-101								TUBE INSTL, cabin air duct water (LH only) *(see fig. 144)*	1	
-46	784719-101								DUCT INSTL, gun gas purge (LH only) *(see fig. 147 and 148)*	1	
	784719-1	A.							DUCT INSTL, gun gas purge (LH only) *(see fig. 147 and 148)*	1	
-47	784792-105								LINER INSTL, LH ammunition compartment fuel tank *(see fig. 38)*	1	
	852072-101								GROUND RECEPTACLE INSTL	1	6766-
-47A	2J2								JACK ASSY (43999)	1	
-48	784899-107								LINER INSTL, RH ammunition compartment fuel tank *(see fig. 38)*	1	6701-6790
	784899-109								LINER INSTL, RH ammunition compartment fuel tank *(see fig. 38)*	1	6791-
-49	760787-5								SEAL INSTL, nose landing gear (LH only) *(see fig. 234)*	1	
	850284-101								EQUIPMENT INSTL, forward fuselage LH cabin	1	
-50	761199-101								DUCT INSTL, LH fuselage station 184 to 206 rain removal *(see fig. 149)*	1	
-51	761173-3L								DUCT INSTL, LH foot warmer *(see fig. 142)*	1	
-52	785342-101								SHELF INSTL, LH cockpit *(see fig. 167)*	1	6701-6815
	785342-107								SHELF INSTL, LH cockpit *(see fig. 167)*	1	6816-
-53	784973-1								TUBE INSTL, canopy seal pressure *(see fig. 139)*	1	
-54	784340-1								DUCT INSTL, air conditioning package fan discharge *(see fig. 147)*	1	
-55	789594-1								DUCT INSTL, gun purge and anti-g valve *(see fig. 148)*	1	
-56	784866-1								COOLING SYSTEM INSTL, regulator *(see fig. 137)*	1	
-57	784252-1								SAFETY VALVE INSTL, electronic compartment *(see fig. 146)*	1	
	784461-101	A.							PLUMBING INSTL, cockpit and electronic compartment pressure equipment *(see fig. 145 and 146)*	REF	
-58	784461-103	B.							PLUMBING INSTL, cockpit and electronic compartment pressure equipment *(see fig. 145 and 146)*	1	
-59	850527-101								PANEL INSTL, cockpit LH trim *(see fig. 215)*	1	
-60	784972-103								PANEL INSTL, cockpit LH trim *(see fig. 215)*	1	
-61	767017-1								COVER INSTL, cabin pressure valve and regulator *(see fig. 146)*	1	
-62	767101-1								DUCT INSTL, LH fuselage station 206 to 255 rain removal *(see fig. 149)*	1	
-63	785552-5								DUCT INSTL, electronic compartment defogging *(see fig. 143)*	1	
-64	779177-1								DRAIN INSTL, rain removal duct *(see fig. 149)*	1	
	793856-3								PLUMBING INSTL, pitot static pressure *(see fig. 134)*	1	
-66	795947-1								DRAIN PORT INSTL, electronic compartment *(see fig. 38)*	1	
-67	790062-101								PLUMBING INSTL, anti-G valve *(see fig. 140)*	1	6701-6740
	790062-103								PLUMBING INSTL, anti-G valve *(see fig. 140)*	1	6741-6865
	790062-105								PLUMBING INSTL, anti-G valve *(see fig. 140)*	1	6866-
-68	850652-101								SYSTEM INSTL, radar pressurization *(see fig. 138)*	1	
	784651-1								SHROUD INSTL, ram air exhaust duct *(see fig. 147)*	1	
	851830-101	C.							SWITCH INSTL, eng. RPM lockup override *(see fig. 215)*	1	
	850285-101								EQUIPMENT INSTL, forward fuselage RH	1	
-70	761173-3R								DUCT INSTL, RH foot warmer *(see fig. 142)*	1	
-71	761176-3								SCOOP INSTL, RH fuselage station 219 to 255 pilot fresh air *(see fig. 214)*	1	
-72	766627-1								FITTING INSTL, overboard drain *(see fig. 151)*	1	6701-6840
	852409-101								FITTING INSTL, overboard drain *(see fig. 151)*	1	6841-
-73	763127								SEAL INSTL, refrigerator steam vent *(see fig. 151)*	1	
-74	760957								DUCT INSTL, fuselage station 300 to 310 RH refrigerator ram air *(see fig. 151)*	1	
-75	768512-1								TUBE INSTL, bleed air duct seal *(see fig. 151)*	1	
-76	784399-5								STUD INSTL, air conditioning package *(see fig. 155)*	1	
-77	787124-501								PLUMBING INSTL, defogger controller *(see fig. 141)*	1	
-79	796510-3								DUCT INSTL, cabin air *(see fig. 142)*	1	
-80	784862-3								SUPPORT INSTL, liquid oxygen *(see fig. 136)*	1	
-81	784940-1								CONTROLLER INSTL, defogger *(see fig. 141)*	1	

Figura e particolare	NDR	1	2	3	4	5	6	7	DENOMINAZIONE	Quant.	Codice applicab.
30-82	784706-1								DUCT INSTL, windshield defogging *(see fig. 141)*	1	
-83	850537-101								PANEL INSTL, RH cockpit trim *(see fig. 216)*	1	
-84	785070-5								PANEL INSTL, RH cockpit trim *(see fig. 216)*	1	
-85	785334-103								DUCT INSTL, fuselage station 255 to 297 rain removal *(see fig. 150)*	1	
-86	785020-1								VALVE INSTL, cabin safety *(see fig. 145)*	1	
-86A	784822-107								SHELF INSTL, RH cockpit	1	
	849142-103								STRUCTURE INSTL, fuselage station 184 to 358 side panel LH	1	
	849142-105								STRUCTURE INSTL, fuselage station 184 to 358 side panel RH	1	
-89	760103-101								STRUCTURE INSTL, RH fuselage station 255 to 358 *(see fig. 38)*	1	6701-6765
	760103-105								STRUCTURE INSTL, RH fuselage station 255 to 358 *(see fig. 38)*	1	6766-
	760115-503	A.							FORMER INSTL, fuselage station 315 to 352 LH	1	
	760115-151								FORMER INSTL, fuselage station 315 to 352 LH	1	
-90	760115-135	A.							. FORMER ASSY, fuselage station 315 to 352 *(see fig. 101)*	1	
	760115-153								. FORMER ASSY, fuselage station 315 to 352 *(see fig. 101)*	1	
-91	760115-137								. FORMER ASSY, fuselage station 315 to 352 *(see fig. 101)*	1	
-92	760115-139								. FORMER ASSY, fuselage station 315 to 352 *(see fig. 101)*	1	
-93	764557-1	A.							. FITTING, fuselage station 315 short LH *(see fig. 226)*	1	
-94	764558	A.							. FITTING, fuselage station 315 short RH *(see fig. 226)*	1	
	760115-97	A.							. FRAME ASSY, fuselage station 315 to 352	1	
-95	773719-501								. . STIFFENER INSTL, fuselage station 315 bulkhead (Reqd also on 760115-151) *(see fig. 39)*	1	
	760115-152								FORMER INSTL, fuselage station 315 to 352 RH	1	
-96	760115-117								. FORMER ASSY, fuselage station 315 to 352 *(see fig. 101)*	1	
-97	760115-154								. FORMER ASSY, fuselage station 315 to 352 *(see fig. 101)*	1	
-98	760115-125								. FORMER ASSY, fuselage station 315 to 352 *(see fig. 101)*	1	
-99	760094								MOUNT INSTL, aft gun (LH only) *(see fig. 226)*	1	
-100	760146-105								STRUCTURE INSTL, fuselage station 184 to 255 LH cockpit *(see fig. 36)*	1	
-101	760147-101								STRUCTURE INSTL, fuselage station 184 to 255 RH cockpit *(see fig. 37)*	1	6701-6815
	760147-107								STRUCTURE INSTL, fuselage station 184 to 255 RH cockpit *(see fig. 37)*	1	6816-
-102	760151-101								SUPPORT INSTL, nose landing gear (LH only) *(see fig. 232)*	1	
-102A	851245-101								SWITCH INSTL, aim-7N missile ground power test (LH only) *(see fig. 39)*	1	
	760163-145								BULKHEAD INSTL, fuselage station 335 (LH only) *(see fig. 39)*	1	
-103	760163-149								. BULKHEAD ASSY, fuselage station 335 *(see fig. 101)*	1	
-104	783100-1								. FLANGE ASSY, case stowage to auxiliary fuel tank interconnect support *(see fig. 100)*	1	
-105	760163-147								BULKHEAD INSTL, fuselage station 335 (RH only) *(see fig. 151)*	1	
-106	760163-151								. BULKHEAD ASSY, fuselage station 335 *(see fig. 101)*	1	
-107	760248-507								LONGERON INSTL, fuselage station 255 to 358 upper LH *(see fig. 38)*	1	6701-6765
	760248-101								LONGERON INSTL, fuselage station 255 to 358 upper LH *(see fig. 38)*	1	6766-
-108	760248-509								LONGERON INSTL, fuselage station 255 to 358 upper RH *(see fig. 38)*	1	
-109	766642-1								DOOR INSTL, fuselage station 328 rigging pin access (RH only) *(see fig. 60)*	1	
-110	761029-507								BRACKET INSTL, outboard rudder torque tube support LH *(see fig. 64)*	1	
-111	761029-504								BRACKET INSTL, outboard rudder torque tube support RH *(see fig. 64)*	1	
-112	761378-101								BULKHEAD INSTL, RH fuselage station 315 *(see fig. 172)*	1	
-113	761560								FIXTURE INSTL, boresight target aligning (LH only) *(see fig. 226)*	1	
-114	764548								SUPPORT INSTL, aft gun mount (LH only) *(see fig. 228)*	1	
-115	764650-103								FITTING INSTL, forward gun mount base (LH only) *(see fig. 226)*	1	
	764650-501	A.							FITTING INSTL, forward gun mount base (LH only) *(see fig. 226)*	1	
-116	850247-101								DOOR INSTL, fuselage station 340 to 352 LH *(see fig. 61)*	1	
-116A	850220-101								DOOR INSTL, fus sta 358 pylon mounting hole LH *(see fig. 61)*	1	

Figura e particolare	NDR	1	2	3	4	5	6	7	DENOMINAZIONE	Quant.	Codice applicab.
30-117	769335-103								BULKHEAD INSTL, fuselage station 358 forward LH *(see fig. 44)*	1	
-118	769335-105								BULKHEAD INSTL, fuselage station 358 forward RH *(see fig. 44)*	1	6701-6765
	769335-139								BULKHEAD INSTL, fuselage station 358 forward RH *(see fig. 44)*	1	6766-
-119	769580-33								TANK ATTACHMENT INSTL, fuselage station 358 bulkhead splice special stores forward main fuel (LH only) *(see fig. 104)*	1	
-120	769580-37								TANK ATTACHMENT INSTL, fuselage station 358 bulkhead splice special stores forward main fuel (RH only) *(see fig. 104)*	1	
-121	769859-501								FITTING INSTL, barrel stabilizer support (LH only) *(see fig. 226)*	1	
-122	771539-105								TUNNEL INSTL, fuselage station 335 flight control bellcrank LH *(see fig. 84)*	1	
-123	771539-103								TUNNEL INSTL, fuselage station 335 flight control bellcrank RH *(see fig. 84)*	1	
-124	775028-1								VENT INSTL, liquid oxygen (LH only) *(see fig. 136)*	1	
	775189-103								BULKHEAD INSTL, liquid oxygen compartment RH	1	
-125	775323-103								BULKHEAD ASSY, liquid oxygen compartment *(see fig. 39)*	1	
-126	778772-1								SHROUD INSTL, blast tube bleed (LH only) *(see fig. 226)*	1	
-127	777494-1	B.							COVER INSTL, LH fus sta 212 to 244 blast tube opening *(see fig. 226)*	1	
-127A	778775-1	A.							TUBE INSTL, blast (LH only) *(see fig. 226)*	1	
-128	783151-105								BULKHEAD INSTL, fuselage station 255 LH *(see fig. 36 and 208)*	1	
-129	783151-109								BULKHEAD INSTL, fuselage station 255 RH *(see fig. 37)*	1	
-130	783238-1								DOOR INSTL, purge valve access (LH only) *(see fig. 61)*	1	
-131	783244-101								STRUCTURE INSTL, LH fuselage station 255 to 358 *(see fig. 38)*	1	
-132	783269-105								SUPPORT INST, case stowage compartment (LH only) *(see fig. 230)*	1	
-133	783315-501								DOOR INSTL, fuselage station 322 to 335 rigging pin and switch access (LH only) *(see fig. 60)*	1	
-134	783344-125								WEB INSTL, fuselage station 310 pressure LH *(see fig. 39)*	1	
	783344-117								WEB INSTL, fuselage station 310 pressure RH *(see bg. 39)*	1	
-135	783474-103								BULKHEAD ASSY, fuselage station 184 (LH and RH) *(see fig. 36 and 37)*	1	
-136	783477-3								SUPPORT INSTL, refrigerator (RH only) *(see fig. 155)*	1	
-137	849952-103								ELECTRICAL INSTL, AC load center (RH only) *(see fig. 172)*	1	
-138	850248-101								DOOR INSTL, fuselage station 340 to 352 external stores electrical access (RH only) *(see fig. 61)*	1	
-138A	850220-102								DOOR INSTL, fus sta 358 pylon mounting hole RH *(see fig. 61)*	1	
-139	783986-3								DOUBLER INSTL, LH angle of attack transducer *(see fig. 214)*	1	
	784143-101								BULKHEAD ASSY, fuselage station 305 lower (LH only) *(see fig. 236)*	1	6701-6765
	784143-103								BULKHEAD ASSY, fuselage station 305 lower (LH only) *(see fig. 236)*	1	6766-
-140	770932-1								PULLEY INSTL, lower fuselage station 305 nose steering *(see fig. 236)*	1	
-141	783269-103								ANGLE INSTL, case stowage compartment *(see fig. 230)*	1	
-142	784406-1								FITTING INSTL, seat gun lower support LH *(see fig. 208)*	1	
-143	784406-3								FITTING INSTL, seat gun lower support RH *(see fig. 208)*	1	
-144	784601-101								LONGERON INSTL, fuselage station 244 to 255 (LH and RH) *(see fig. 36 and 37)*	1	
	785041-1	A.							STRUCTURE INSTL, blast tube bleed (LH only) *(see fig. 226)*	1	
-145	785041-101	B.							STRUCTURE INSTL, blast tube bleed (LH only) *(see fig. 226)*	1	
-146	785347-15								LACING ATTACHMENT INSTL, auxiliary fuel tank LH *(see fig. 101)*	1	
-147	785347-16								LACING ATTACHMENT INSTL, auxiliary fuel tank RH *(see fig. 101)*	1	
-148	850688-103	B.							STRUCTURE INSTL, gun bay sparrow (LH only) *(see fig. 230)*	1	
	850753-103	B.							STRUCTURE INSTL, gun bay sparrow power supply modulator (LH only) *(see fig. 230)*	1	
	850890-103	B.							STRUCTURE INSTL, klystron tuners and firing control relay box (LH only) *(see fig. 230)*	1	
-149	MS27253-2								NAMEPLATE (96906)	1	
	783285-101								TANK INSTL, ammunition compartment fuel (NHA 849138-101) *(see fig. 97)*	1	6701-6720
	783285-105								TANK INSTL, ammunition compartment fuel (NHA 849138-101) *(see fig. 97)*	1	6721-
	783285-103								COVER ASSY, ammunition compartment fuel *(see fig. 97)*	1	
	783534-101	B.							PLUMBING INSTL, ammunition compartment fuel (NHA 849138-101) *(see fig. 97)*	1	

Figura e particolare	NDR	1 2 3 4 5 6 7 DENOMINAZIONE	Quant.	Codice applicab.
30-	783481-1	B. CRADLE INSTL, case stowage compartment fuel tank (NHA 849141-101) *(see fig. 98)*	1	
	778381-101	. CRADLE INSTL, ammunition compartment fuel tank (NHA 849141-101) *(see fig. 97)*	1	
	783286-101	. TANK INSTL, case stowage compartment fuel tank (NHA 849138-101) *(see fig. 98)*	1	

A - Only for FB
B - Only for AWX
C - Reqd per AA.1F-104S-OT-138

Figura e particolare	NDR	1 2 3 4 5 6 7 DENOMINAZIONE	Quant.	Codice applicab.
		FUSELAGE STATION 358 TO 614 STRUCTURE INSTALLATION		
31	849143-101	. STRUCTURE INSTL, fuselage station 358 to 614 (NHA 849140-101) . . .	1	
- 1	SL40-14	. . NUT, self-locking, barrel (97393) *(see fig. 45)*	2	
- 2	LS4893-14C	. . RETAINER, barrel nut (36659) *(see fig. 45)*	2	
- 3	4439-32	. . RING, rigid tube connector (98159) *(see fig. 152)*	1	
- 4	760219-77	. . FASTENER INSTL, engine air duct *(see fig. 51)*.	1	
- 5	761847-3	. . SHIELD INSTL, firewall (NHA 849138-101)	1	6701-6790; 6831-
	—	O. . SHIELD INSTL, firewall (NHA 849138-101)	1	6791-6830
- 6	760624-5L	. . FITTING INSTL, fuselage station 520 to 579 LH *(see fig. 129)* . . .	1	
- 7	760624-503	. . FITTING INSTL, fuselage station 520 to 579 RH *(see fig. 129)* . . .	1	
- 8	761066-3L	. . DOOR INSTL, fuselage station 614 control disconnect LH *(see fig. 60)* .	1	
- 9	761066-3R	. . DOOR INSTL, fuselage station 614 control disconnect RH *(see fig. 60)* .	1	
-10	786456-101	. . PANEL INSTL, fuselage station 579 to 614 *(see fig. 42)*	1	
-11	762862	. . BRACKET INSTL, fuselage station 489 drag chute release *(see fig. 92)*	1	
-12	762862-5	. . BUSHING INSTL, drag chute release *(see fig. 92)*	1	
-13	783343-1	. . BRACKET INSTL, fuselage station 422 landing gear and drag chute manual release *(see fig. 87, 88 and 92)*	1	
-14	763274	. . BRACKET INSTL, aft landing gear manual release *(see fig. 88)* . . .	1	
-15	766215-19	. . FITTING INSTL, fuselage station 358 to 444 LH *(see fig. 44)* . . .	1	
-16	766215-20	. . FITTING INSTL, fuselage station 358 to 444 RH *(see fig. 44)* . . .	1	
-17	769335-101	. . RING INSTL, fuselage station 358 *(see fig. 44)*	1	
-18	769626-13	. . SEAL INSTL, rack recess (NHA 849138-101) *(see fig. 44)*	1	
-19	770111-5	. . ATTACHMENT INSTL, lower fuselage station 358 to 422 rack recess *(see fig. 44)*	1	
-20	775057-3	. . CLIP INSTL, engine guide rail *(see fig. 252)*	1	
-21	775198-1	. . SEAL INSTL, air intake splitter duct *(see fig. 53)*	1	
-22	782945-3	. . FRAME INSTL, fuselage station 457 to 520 *(see fig. 105)*	1	
-22A	786459-7	. . SPLICE INSTL, fuselage station 579 lower *(see fig. 42 and 129)* . . .	1	
-22B	786687-101	. . CONTROL INSTL, fuselage station 600 drag chute and arrestor hook release *(see fig. 93)*	1	
-22C	786980-109	. . HOOK INSTL, arresting *(see fig. 259)*	1	6701-6740
	786980-111	. . HOOK INSTL, arresting *(see fig. 259)*	1	6741-6840
	786980-113	. . HOOK INSTL, arresting *(see fig. 259)*	1	6841-
	849143-107	. . SIDE PANEL COMPLETE, fuselage station 358 to 614 LH	1	
	849143-109	. . SIDE PANEL COMPLETE, fuselage station 358 to 614 RH	1	
-23	786148-1	. . . FILLET INSTL, wing fixed LH *(see fig. 7)*	1	
-24	762725-502	. . . FILLET INSTL, wing fixed RH *(see fig. 7)*	1	
-25	786149-1	. . . FILLET INSTL, fuselage station 511 to 557 LH wing *(see fig. 7)*. .	1	
-26	786217-105	. . . FILLET INSTL, fuselage station 511 to 555 RH wing *(see fig. 7)*. .	1	
-27	850016-101	. . . SCOOP INSTL, engine air LH *(see fig. 51)*	1	
-28	850016-102	. . . SCOOP INSTL, engine air RH *(see fig. 51)*	1	
-29	760219-117	. . . DUCT INSTL, engine air LH *(see fig. 51)*	1	
-30	760219-118	. . . DUCT INSTL, engine air RH *(see fig. 51)*	1	
-31	761036-101	. . . DOOR INSTL, fuselage station 489 to 505 engine access LH *(see fig. 54)*	1	
-32	761036-102	. . . DOOR INSTL, fuselage station 489 to 505 engine access RH *(see fig. 54)*	1	
-33	761069L	. . . DOOR INSTL, ground cooling LH *(see fig. 54)*	1	
-34	761069R	. . . DOOR INSTL, ground cooling RH *(see fig. 54)*	1	
-35	761086L	. . . DOOR INSTL, saddle tank access LH *(see fig. 60)*	1	
-36	761086R	. . . DOOR INSTL, saddle tank access RH *(see fig. 60)*	1	
-37	761087L	. . . DOOR INSTL, saddle tank access LH *(see fig. 60)*	1	
-38	761087R	. . . DOOR INSTL, saddle tank access RH *(see fig. 60)*	1	
-39	761088-501	. . . DOOR INSTL, fuselage station 489 to 505 controls access LH *(see fig. 60)*	1	
-40	761088R	. . . DOOR INSTL, fuselage station 489 to 505 controls access RH *(see fig. 60)*	1	
-41	761089	. . . COVER INSTL, leading edge flap switch (RH only) *(see fig. 60)*. .	1	
-42	761287-20	. . . DOOR INSTL, fire fighting access (LH only) *(see fig. 61)* . . .	1	
-43	761467-31	. . . ANGLE INSTL, fuselage station 422 to 555 LH *(see fig. 41)* . . .	1	
-44	761467-32	. . . ANGLE INSTL, fuselage station 422 to 555 RH *(see fig. 41)* . . .	1	
-45	762024-103	. . . DOOR INSTL, external power receptacle (RH only) *(see fig. 195)* .	1	6701-6790; 6831-
	852547-101	O. . . DOOR INSTL, external power receptacle (RH only) *(see fig. 195)* .	1	6791-6830
	846024-101	. . . ELECTRICAL INSTL, external cart area switch RH *(see fig. 195)* .	1	6701-6790; 6816-

Fuselage Complete

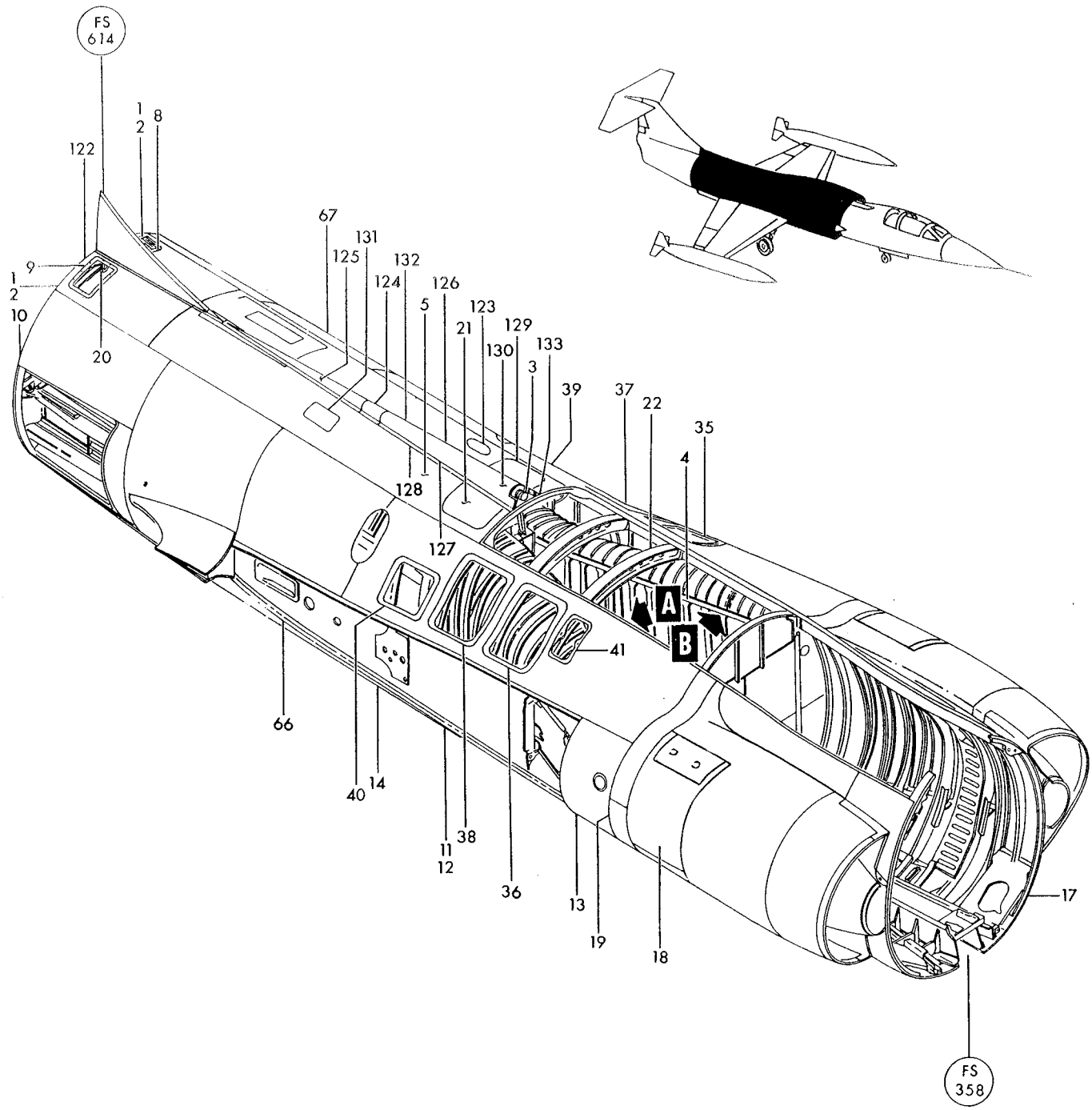

Figure 31—Fuselage Station 358 to 614 Structure Installation (Sheet 1 of 2)

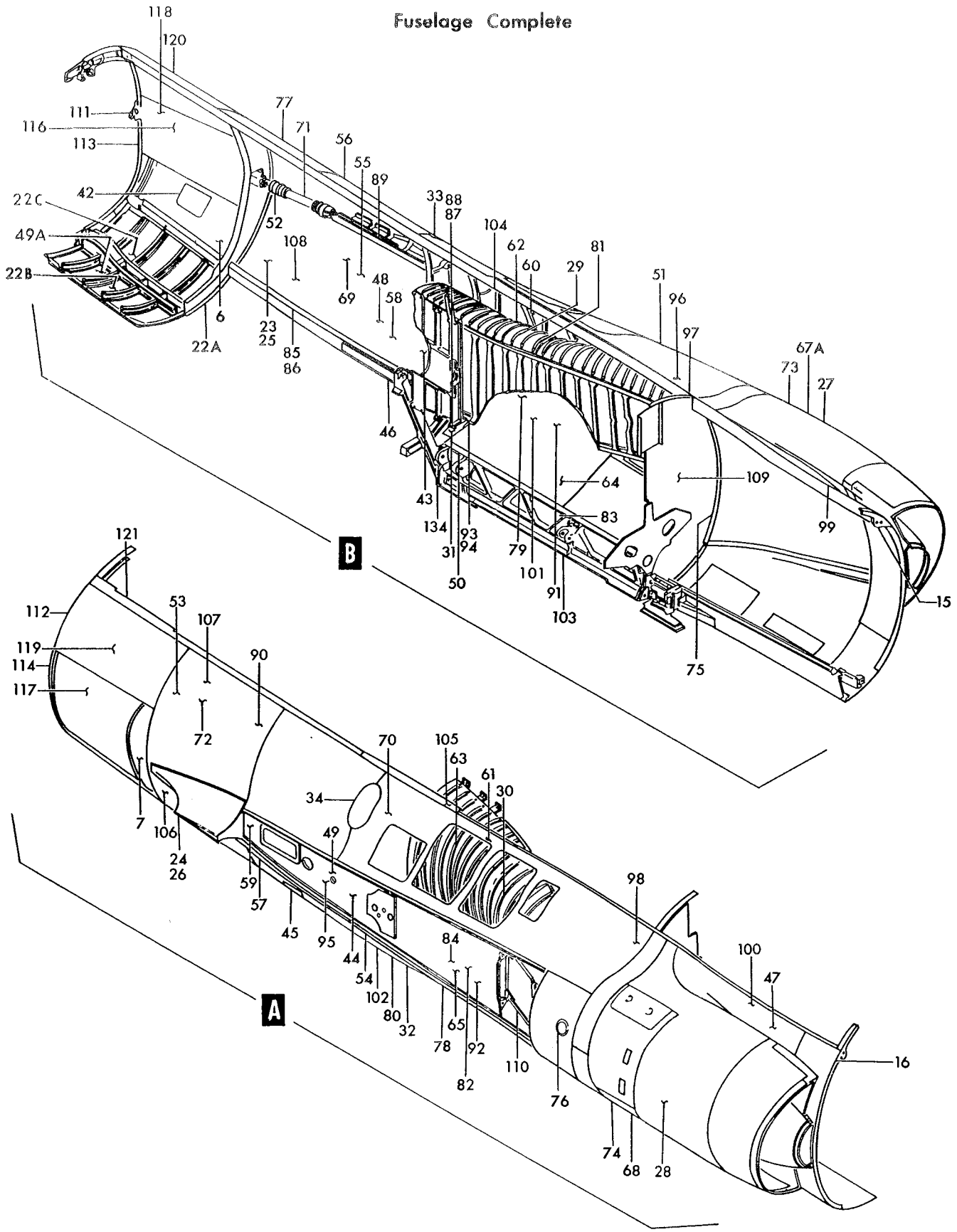

Figure 31— Fuselage Station 358 to 614 Structure Installation (Sheet 2 of 2)

Figura e particolare	NDR	1 2 3 4 5 6 7	DENOMINAZIONE	Quant.	Codice applicab.
31	852810-101	O. . .	ELECTRICAL INSTL, external power recp. area switch *(see fig. 195)*	1	6791-6815
-46	762401-3	M. . .	BRACKET INSTL, fuel strainer and shutoff valve (LH only) *(see fig. 112)*	1	6701-6815
	762401-111	N. . .	BRACKET INSTL, fuel strainer and shutoff valve (LH only) *(see fig. 112)*	1	6816-
-47	851087-101	. . .	PLUMBING INSTL, main fuel tank pressure switch (RH only) *(see fig. 102)*	1	
	763360-103	C. . .	VALVE INSTL, BLC LH *(see fig. 12)*	1	6701-6765
-48	763360-105	D. . .	VALVE INSTL, BLC LH *(see fig. 12)*	1	6766-
	763360-104	C. . .	VALVE INSTL, BLC RH *(see fig. 12)*	1	6701-6765
-49	763360-106	D. . .	VALVE INSTL, BLC RH *(see fig. 12)*	1	6766-
	852072-101	. . .	GROUND RECEPTACLE INSTL (RH only)	1	6766-
-49A	2J2	. . .	. JACK ASSY (43999)	1	6766-
-50	764136-7	. . .	NAMEPLATE INSTL, firewall main fuel shutoff valve control (LH only) *(see fig. 112)*	1	
-51	766165-103	. . .	TUBE INSTL, main fuel tank adapter and drain (LH only) *(see fig. 105)*	1	
-52	767762-1	. . .	SEAL INSTL, dive flap cylinder fuselage station 579 LH *(see fig. 58)*	1	
-53	767762-2	. . .	SEAL INSTL, dive flap cylinder fuselage station 579 RH *(see fig. 58)*	1	
-54	798415-103	A. . .	PLUMBING INSTL, secondary air by-pass flap (RH only) *(see fig. 125)*	1	6701-6740
	851198-103	B. . .	PLUMBING INSTL, secondary air by-pass flap (RH only) *(see fig. 125)*	1	
-55	789667-101	. . .	REGULATOR INSTL, pylon and tip tank press. (LH only) *(see fig. 113)*	1	
	847637-103	. . .	DRAIN INSTL, fuel tank pressurization system LH *(see fig. 113)*	1	
-56	770846-3	. . .	FITTING INSTL, mid fuselage fuel LH *(see fig. 10)*	1	
-57	770846-5	. . .	FITTING INSTL, mid fuselage fuel RH *(see fig. 10)*	1	
-58	771956-1	. . .	DUCT INSTL, engine BLC LH *(see fig. 12)*	1	
-59	771956-2	. . .	DUCT INSTL, engine BLC RH *(see fig. 12)*	1	6701-6790; 6831-
	—	O. . .	DUCT INSTL, engine BLC RH *(see fig. 12)*	1	6791-6830
-60	774024-501	. . .	BRACKET INSTL, fuel tank aft vent LH *(see fig. 105)*	1	
-61	774024-502	. . .	BRACKET INSTL, fuel tank aft vent RH *(see fig. 105)*	1	
-62	774206-3	. . .	LACING ATTACHMENT INSTL, aft main fuel tank structure LH *(see fig. 107)*	1	
-63	774206-4	. . .	LACING ATTACHMENT INSTL, aft main fuel tank structure RH *(see fig. 107)*	1	
-64	779105-1	. . .	BRACKET INSTL, aft tank interconnect support LH *(see fig. 105)*	1	
-65	779105-2	. . .	BRACKET INSTL, aft tank interconnect support RH *(see fig. 105)*	1	
-66	851107-101	. . .	TRANSMITTER INSTL, engine oil *(see fig. 249)*	1	6701-6765
	785829-107	. . .	TRANSMITTER AND TRANSDUCER INSTL, engine oil RH *(see fig. 249)*	1	6766-6790; 6831-
	852807-101	O. . .	TRASMITTER INSTL, engine oil *(see fig. 249)*	1	6791-6830
	852313-101	O. . .	TRANSDUCER INSTL, engine oil *(see fig. 249)*	1	6791-6830
-67	850664-101	. . .	HEAT EXCHANGER INSTL, primary LH *(see fig. 153)*	1	
-67A	783375-103	. . .	CONTROL INSTL, LH mid panel *(see fig. 63)*	1	6701-6765
	783375-105	. . .	CONTROL INSTL, LH mid panel *(see fig. 63)*	1	6766-
-68	783997-101	. . .	CONTROL INSTL, RH mid panel *(see fig. 63)*	1	
-69	784267-103	I. . .	PLUMBING INSTL, side engine compartment LH *(see fig. 113)*	1	6701-6840
	784267-109	L. . .	PLUMBING INSTL, side engine compartment LH *(see fig. 113)*	1	6841-
-70	784267-5	. . .	PLUMBING INSTL, engine compartment RH *(see fig. 113)*	1	
-71	784882-101	. . .	CYLINDER INSTL, dive flap LH *(see fig. 58)*	1	6701-6866
	784882-103	. . .	CYLINDER INSTL, dive flap LH *(see fig. 58)*	1	6867-
-72	784882-102	. . .	CYLINDER INSTL, dive flap RH *(see fig. 58)*	1	6701-6866
	784882-104	. . .	CYLINDER INSTL, dive flap RH *(see fig. 58)*	1	6867-
-73	850940-101	. . .	HYDRAULIC INSTL, mid LH complete side panel *(see fig. 114)*	1	
-74	850941-101	. . .	HYDRAULIC INSTL, mid RH complete side panel *(see fig. 114)*	1	
-75	784947-103	. . .	LIGHT INSTL, forward navigation LH *(see fig. 198)*	1	
-76	784947-104	. . .	LIGHT INSTL, forward navigation RH *(see fig. 198)*	1	
-77	849913-101	. . .	ELECTRICAL INSTL, mid fuselage LH *(see fig. 192)*	1	
-78	849914-101	. . .	ELECTRICAL INSTL, mid fuselage RH *(see fig. 194)*	1	
	847383-111	. . .	DETECTOR INSTL, RH trailing edge flap asymmetry *(see fig. 14)*	1	6701-6765
	847383-115	. . .	DETECTOR INSTL, RH trailing edge flap asymmetry *(see fig. 14)*	1	6766-
	847383-109	. . .	CONTROL INSTL, LH asymmetry detector *(see fig. 14)*	1	6701-6790
	—	O. . .	CONTROL INSTL, LH asymmetry detector *(see fig. 14)*	1	6791-6830
	847383-117	. . .	CONTROL INSTL, LH asymmetry detector *(see fig. 14)*	1	6831-
	849143-103	. . .	STRUCTURE INSTL, fuselage station 358 to 614 side panel LH	1	
	849143-105	. . .	STRUCTURE INSTL, fuselage station 358 to 614 side panel RH	1	
-79	760290-27	. . .	. FITTING INSTL, fuselage station 422 to 489 LH *(see fig. 40)*	1	
-80	760290-28	. . .	. FITTING INSTL, fuselage station 422 to 489 RH *(see fig. 40)*	1	

Figura e particolare	NDR	1	2	3	4	5	6	7	DENOMINAZIONE	Quant.	Codice applicab.
31-81	797362-1								LINER INSTL, aft main fuel tank LH *(see fig. 107)*	1	
-82	797362-2								LINER INSTL, aft main fuel tank RH *(see fig. 107)*	1	
-83	760290-101								FLOOR INSTL, fuselage station 422 to 489 LH *(see fig. 40)*	1	
-84	760290-506								FLOOR INSTL, fuselage station 422 to 489 RH *(see fig. 40)*	1	
-85	760624-101								FITTING INSTL, fuselage station 520 to 579 LH *(see fig. 129)*	1	
-86	760624-102								FITTING INSTL, fuselage station 520 to 579 RH *(see fig. 129)*	1	
-87	761036-107								DOUBLER INSTL, fuselage station 489 to 505 engine access LH *(see fig. 54)*	1	
-88	761036-108								DOUBLER INSTL, fuselage station 489 to 505 engine access RH *(see fig. 54)*	1	
-89	761222-11L								SUPPORT INSTL, dive flap cylinder LH *(see fig. 58)*	1	
-90	761222-11R								SUPPORT INSTL, dive flap cylinder RH *(see fig. 58)*	1	
-91	761467-101								WING MATING PLANE INSTL, fuselage station 422 to 555 LH *(see fig. 41)*	1	
-92	761467-102								WING MATING PLANE INSTL, fuselage station 422 to 555 RH *(see fig. 41)*	1	
-93	761847-207								FIREWALL INSTL, fuselage station 489 to 505 LH *(see fig. 56)*	1	
-94	761847-205								FIREWALL INSTL, fuselage station 489 to 505 RH *(see fig. 56)*	1	
-95	762024-101								STRUCTURE INSTL, external power receptacle (RH only) *(see fig. 195)*	1	6701-6790; 6831-
	852565-103	O.							STRUCTURE INSTL, external power receptacle (RH only) *(see fig. 195)*	1	6791-6830
-96	763115-3								BRACKET ASSY, fuselage station 451 throttle control fairlead bearing (LH only) *(see fig. 81)*	1	
-97	764361-3								TANK ATTACHMENT INSTL, main aft fuel LH *(see fig. 108)*	1	
-98	764361-4								TANK ATTACHMENT INSTL, main aft fuel RH *(see fig. 108)*	1	
-99	849144-101								STRUCTURE ASSY, fuselage station 358 to 422 LH *(see fig. 40)*	1	
-100	849144-103								STRUCTURE ASSY, fuselage stagion 358 to 422 RH *(see fig. 40)*	1	
-101	783224-107								SIDE PANEL INSTL, fuselage station 489 to 614 lower LH *(see fig. 42)*	1	
-102	783224-108								SIDE PANEL INSTL, fuselage station 489 to 614 lower RH *(see fig. 42)*	1	
-103	783171-1								KEELSON INSTL, fuselage station 422 to 489 (LH only) *(see fig. 55)*	1	
-104	783226-1								LONGERON INSTL, fuselage station 444 to 614 side panel LH *(see fig. 107)*	1	
-105	783226-3								LONGERON INSTL, fuselage station 444 to 614 side panel RH *(see fig. 107)*	1	
-106	783287-101								FRAME INSTL, lower RH ground cooling door *(see fig. 54)*	1	6701-6790; 6831-
	—	O.							FRAME INSTL, fus sta 566 to 577 lower cooling	1	6791-6830
-107	783288-103	G.							FRAME INSTL, upper RH ground cooling door *(see fig. 54)*	1	6701-6790; 6831-6840
	—	O.							FRAME INSTL, upper RH ground cooling door *(see fig. 54)*	1	6791-6830
	783288-105	H.							FRAME INSTL, upper RH ground cooling door *(see fig. 54)*	1	6841-
-108	783536-1								SKIN INSTL, fuselage station 552 to 579 lower LH *(see fig. 54)*	1	
-109	760490-501								WEB INSTL, fuselage station 437 to 457 canted LH *(see fig. 41)*	1	
-110	760490-502								WEB INSTL, fuselage station 437 to 457 canted RH *(see fig. 41)*	1	
	798262-105								ATTACHMENT INSTL, fuselage station 489 bulkhead roller bracket LH *(see fig. 42 and 240)*	1	
	798262-106								ATTACHMENT INSTL, fuselage station 489 bulkhead roller bracket RH *(see fig. 42 and 240)*	1	
	849143-111								SIDE PANEL ASSY, fuselage station 358 to 614 LH	1	
	849143-113								SIDE PANEL ASSY, fuselage station 358 to 614 RH	1	
-111	760932L								MOUNT INSTL, fuselage station 614 bulkhead forward thrust engine LH *(see fig. 251)*	1	
-112	760932R								MOUNT INSTL, fuselage station 614 bulkhead forward thrust engine RH *(see fig. 251)*	1	
-113	786600-101								BULKHEAD INSTL, forward section fuselage station 614 LH *(see fig. 42)*	1	
-114	786600-103								BULKHEAD INSTL, forward section fuselage station 614 RH *(see fig. 42)*	1	
-116	761349-105								STRUCTURE INSTL, dive flap LH *(see fig. 58)*	1	6701-6840
	761349-129								STRUCTURE INSTL, dive flap LH *(see fig. 58)*	1	6841-
-117	761349-111								STRUCTURE INSTL, dive flap RH *(see fig. 58)*	1	6701-6840

Figura e particolare	NDR	1	2	3	4	5	6	7	DENOMINAZIONE	Quant.	Codice applicab.
31	761349-131								STRUCTURE INSTL, dive flap RH *(see fig. 58)*	1	6841-
-118	761464L								TRACK INSTL, upper dive flap LH *(see fig. 58)*	1	
-119	761464R								TRACK INSTL, upper dive flap RH *(see fig. 58)*	1	
-120	783226-501								LONGERON INSTL, fuselage station 444 to 614 upper LH *(see fig. 42)*	1	
-121	783226-503								LONGERON INSTL, fuselage station 444 to 614 upper RH *(see fig. 42)*	1	
	849143-115								STRUCTURE INSTL, fuselage station 358 to 614 upper fixed panel	1	6701-6815
	849143-117								STRUCTURE INSTL, fuselage station 358 to 614 upper fixed panel	1	6816-6865
	849143-119								STRUCTURE INSTL, fuselage station 358 to 614 upper fixed panel	1	6866-
-122	761653								BEAM INSTL, fuselage station 603 elevator control walking *(see fig. 76)*	1	
-123	766936-1	E							DOOR INSTL, dual pressure regulator inspection *(see fig. 60)*	1	6701-6865
	852404-101	F							DOOR INSTL, dual pressure regulator inspection *(see fig. 60)*	1	6666-
	777210-103								PANEL INSTL, fuselage station 489 to 614 top skin	1	6701-6815
	777210-111								PANEL INSTL, fuselage station 489 to 614 top skin	1	6816-6865
	777210-115								PANEL INSTL, fuselage station 489 to 614 top skin	1	6866-
	777210-105								PANEL ASSY, fuselage station 489 to 614 top skin	1	6701-6815
	777210-113								PANEL ASSY, fuselage station 489 to 614 top skin	1	6816-6865
	777210-117								PANEL ASSY, fuselage station 489 to 614 top skin	1	6866-
-124	777220-1								DOOR INSTL, dipstick access *(see fig. 248)*	1	
-125	777211-1								DORSAL INSTL, fuselage station 518 to 577 *(see fig. 59)*	1	
-126	851052-101								FITTING INSTL, front engine mount LH *(see fig. 252)*	1	
-127	851052-103								ANGLE INSTL, front engine mount RH *(see fig. 252)*	1	
-128	775057-1								GUIDE RAIL INSTL, engine *(see fig. 252)*	1	
-129	784962-1								DOOR INSTL, top fuselage station 489 to 505 fuel valve access *(see fig. 60)*	1	6701-6815
	852211-101								DOOR INSTL, top fuselage station 489 to 505 fuel valve access *(see fig. 60)*	1	6816-
-130	777655-101								DUCT INSTL, dorsal bleed air *(see fig. 152)*	1	
-131	777227-1								DOOR INSTL, oil tank access *(see fig. 60)*	1	
-132	782945-103								FRAME ASSY, fuselage station 457 to 520	1	
	782949-1								FORMER ASSY, fuselage station 489 main frame	1	
-133	764361-6								TANK ATTACHMENT INSTL, main aft fuel fuselage station 489 *(see fig. 108)*	1	
-134	783171-3								ATTACHMENT INSTL, fuselage station 422 to 489 *(see fig. 55)*	1	

A - Removed per AA.1F-104S-OT-138
B - Reqd per AA.1F-104S-OT-138
C - Removed per AA.1F-104-OT-704A
D - Reqd per AA.1F-104-OT-704A
E - Removed per AA.1F-104-OT-792
F - Reqd per AA.1F-104-OT-792
G - Removed per AA.1F-104-OT-799
H - Reqd per AA.1F-104-OT-799
I - Removed per AA.1F-104-OT-800
L - Reqd per AA.1F-104-OT-800
M - Removed per AA.1F-104-OT-796
N - Reqd per AA.1F-104-OT-796
O - Only per partial incorporation of SPU system

Figura e particolare	NDR	DENOMINAZIONE	Quant.	Codice applicab.
		AFT FUSELAGE COMPLETE		
32	849136-101	AFT SECTION COMPLETE (NHA 849071-101)	1	
	849137-101	FUSELAGE COMPLETE, aft	1	
- 1	763441-5	SEAL INSTL, fuselage station 614 bulkhead *(see fig. 45)*	1	
	849139-101	STRUCTURE ASSY, aft fuselage	1	
	783321-3	PANEL, aft fuselage LH side	1	
	849139-105	PANEL, aft fuselage RH side	1	
	783410-1	PANEL INSTL, fuselage station 639 RH	1	
- 2	783410-7	RING ASSY, fuselage station 639 *(see fig. 255)*	1	
- 3	783805-1	LONGERON INSTL, fuselage station 614 to 685 lower LH *(see fig. 43)*	1	
- 4	783805-3	LONGERON INSTL, fuselage station 614 to 685 lower RH *(see fig. 43)*	1	
- 5	762478-18	DOOR ASSY, drag chute latch *(see fig. 257)*	1	
- 6	770534-1	DRAIN INSTL, aft fuselage hudraulic RH *(see fig. 29)*	1	
- 7	770534-3	FITTING INSTL, aft fuselage hydraulic overboard drain LH *(see fig. 29)*	1	
- 8	761672-4	HOUSING INSTL, aft navigation light LH *(see fig. 198)*	1	
- 9	761672-5	HOUSING INSTL, aft navigation light RH *(see fig. 198)*	1	
-10	783502-1	LONGERON INSTL, fuselage station 614 to 639 upper LH *(see fig. 43)*	1	
-11	783502-2	LONGERON INSTL, fuselage station 614 to 639 upper RH *(see fig. 43)*	1	
-12	786155-1	BRACKET INSTL, fuselage station 639 drag chute *(see fig. 94)*	1	
	784102-1	BULKHEAD INSTL, fuselage station 614 aft section	1	
-13	784134-1	FITTING ASSY, dorsal attach *(see fig. 43)*	1	
-14	773662-1	SCUPPER INSTL, fuselage station 614 aft fuel drain *(see fig. 43)*	1	
-15	761166-4	SPOTWELD ASSY, fuselage station 614 *(see fig. 94)*	1	
-16	784750-1	SHEAR PIN INSTL, aft fuselage section *(see fig. 43)*	1	
-17	784751-1	DOOR INSTL, aft fuselage electrical disconnect *(see fig. 60)*	1	
-18	760968-101	BRACKET INSTL, fuselage station 640 rudder cable pulley LH *(see fig. 67)*	1	
-19	760968-102	BRACKET INSTL, fuselage station 640 rudder cable pulley RH *(see fig. 67)*	1	
-20	767979-107	LATCH INSTL, drag chute door *(see fig. 257)*	1	
-21	762477-11	STRUCTURE INSTL, drag chute door LH *(see fig. 255)*	1	
-22	762477-12	STRUCTURE INSTL, drag chute door RH *(see fig. 255)*	1	
-23	772954-1	COVER INSTL, drag chute door mechanism *(see fig. 257)*	1	
-24	783502-3	LONGERON INST, fuselage station 614 to 639 barrel upper *(see fig. 45)*	1	
-25	762477-15	ACTUATOR INSTL, drag chute door *(see fig. 255)*	2	
	762477-10	ACTUATOR INSTL, drag chute door *(see fig. 255)*	2	
-26	797273-101	DOOR INSTL, drag chute *(see fig. 255)*	1	6701-6790
	797273-107	DOOR INSTL, drag chute *(see fig. 255)*	1	6791-
-27	762475-101	HINGE INSTL, drag chute LH *(see fig. 255)*	1	
-28	762475-102	HINGE INSTL, drag chute RH *(see fig. 255)*	1	
-29	851417-101	TAIL CONE INSTL *(see fig. 43)*	1	
-30	763582L	BRACKET INSTL, fuselage station 620 rudder cable fairlead LH *(see fig. 67)*	1	
-31	763582R	BRACKET INSTL, fuselage station 620 rudder cable fairlead RH *(see fig. 67)*	1	
-32	850075-101	BRACKET INSTL, fuselage station 614 stabilizer rod clip LH *(see fig. 76)*	1	
-33	850075-102	BRACKET INSTL, fuselage station 614 stabilizer rod clip RH *(see fig. 76)*	1	
-34	778312-3	FAIRLEAD INSTL, fuselage station 639 rudder cable *(see fig. 67)*	1	
-35	770534-5	PLUMBING INSTL, aft fuselage hydraulic drain *(see fig. 29)*	1	
-36	775030-101	DETECTOR INSTL, fuselage station 663 fire warning *(see fig. 196)*	1	
-37	763638-101	DETECTOR INSTL, fuselage station 674 fire warning *(see fig. 196)*	1	
-37A	851086-101	DETECTOR INSTL, fuselage station 698 fire warning *(see fig. 196)*	1	
-38	785078-1	NAMEPLATE INSTL, empennage attaching instructions *(see fig. 43)*	1	
-39	849921-101	ELECTRICAL INSTL, aft fuselage *(see fig. 197)*	1	

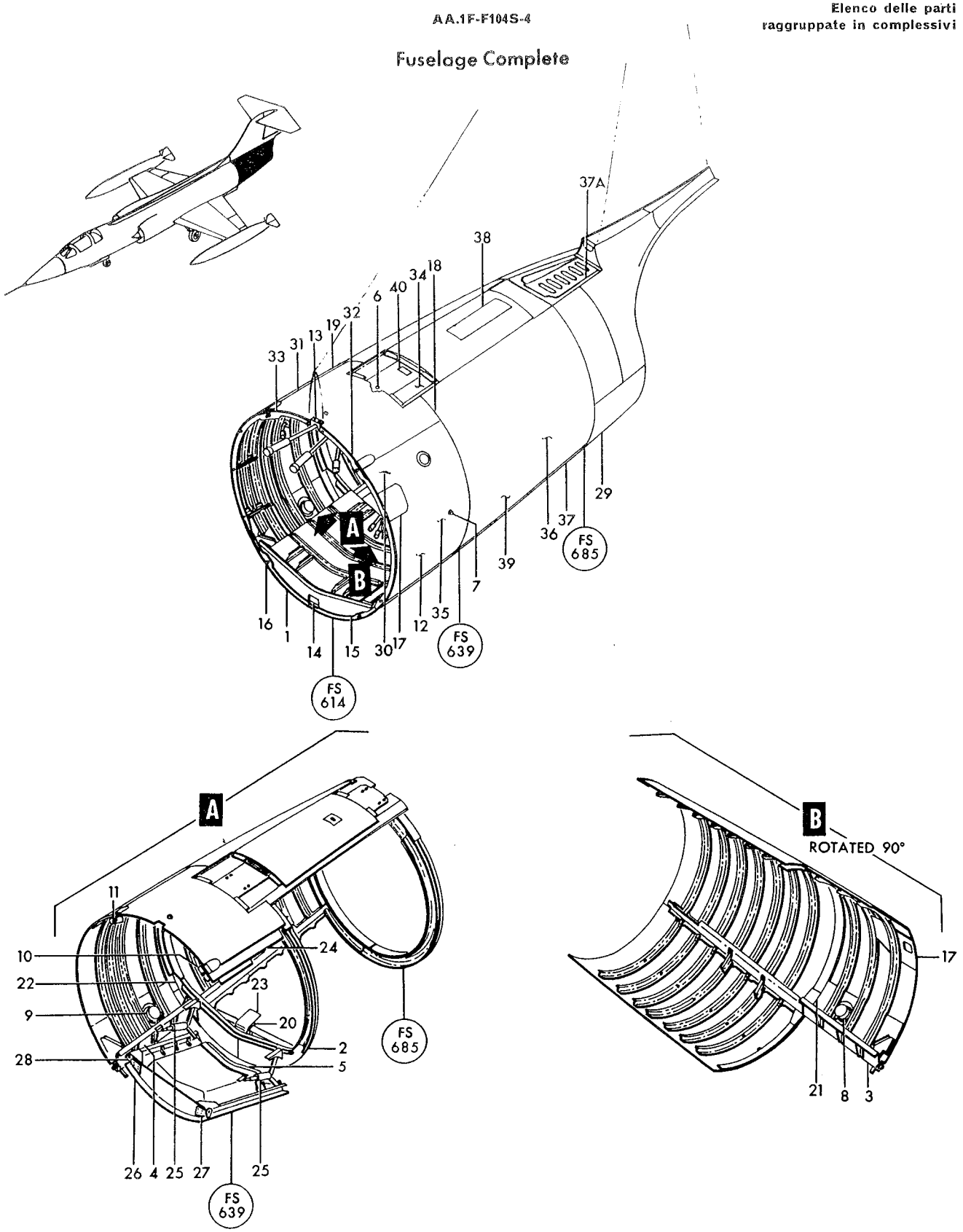

Figure 32—Aft Fuselage Complete

Figura e particolare	NDR	DENOMINAZIONE (1 2 3 4 5 6 7)	Quant.	Codice applicab.
32-40	AN7510C2	PLATE, identification (88044)	1	
	851012-101	ANTENNA INSTL, aft fusellage rear signal horn *(see fig. 197)*	1	
	851012-102	ANTENNA INSTL, aft fuselage rear signal horn *(see fig. 197)*	1	
	784220-103	CABLES INSTL, aft fuselage *(see fig. 67 and 76)*	1	
	761309-101	ROD ASSY, stabilizer disconnect *(see fig. 26 and 76)*	2	
	783162-3	CONTROL INSTL, fuselage station 614 and aft manual release systems *(see fig. 63 and 94)*	1	
	849921-105	ELECTRICAL INSTL, final fin assy *(see fig. 197)*	1	
	761672-101	LENS INSTL, aft navigation light *(see fig. 198)*	1	
	784021-101	PLUMBING INSTL, stabilizer drain *(see fig. 29)*	1	
	789441-1	GASKET INSTL, stabilizer servo input linkage *(see fig. 43)*	1	
	783040-105	SERVO INSTL, stabilizer *(see fig. 26)*	1	
	784621-1	DETECTOR INSTL, vertical stabilizer magnetic azimuth *(see fig. 197)*	1	
	783303-101	FILLET INSTL, fin to fuselage LH *(see fig. 20)*	1	6701-6720
	783303-103	FILLET INSTL, fin to fuselage LH *(see fig. 20)*	1	6721-
	783303-102	FILLET INSTL, fin to fuselage RH *(see fig. 20)*	1	
	783295-109	EMPENNAGE INSTL	1	
	783296-109	EMPENNAGE ASSY *(see fig. 19)*	1	

Figura e particolare	NDR	DENOMINAZIONE	Quant.	Codice applicab.
		STRAKE ASSEMBLY AFT FUSELAGE		
32A	849270-101	STRAKE INSTL, LH (NHA 849071-101)	1	
	849270-102	STRAKE INSTL, RH (NHA 849071-101)	1	
-1	849266-101	STRAKE ASSY LH	1	
	849266-102	STRAKE ASSY RH	1	
		Attaching Parts		
-2	NAS517-4-4	SCREW (80205)	4	
-3	NAS517-4-7	SCREW (80205)	2	
-4	849271-101	SHIM, strake laminated	AR	
-5	850399-101	SHIM, strake laminated	AR	
		*		
-6	849266-135	SEAL	1	
-7	849266-137	SEAL (only on 849266-101)	1	
	849266-157	SEAL (only on 849266-102)	1	
-8	849266-139	SEAL	1	
-9	849266-149	STRIP	1	
-10	849266-155	ANGLE	1	
-11	849266-141	SEAL	1	
-12	849266-147	STRIP	1	
-13	849266-153	ANGLE	1	
-14	849266-143	SEAL	1	
-15	849266-145	STRIP	1	
-16	849266-151	ANGLE	1	
-17	849267-101	LEADING EDGE, strake	1	
-18	849268-101	TRAILING EDGE, strake	1	
-19	849269-101	TIP, strake	1	
-20	849250-101	FITTING, FUS STA 586 strake LH	1	
	849250-102	FITTING, FUS STA 586 strake RH	1	
-21	849251-101	FITTING, FUS STA 614 strake LH	1	
	849251-102	FITTING, FUS STA 614 strake RH	1	
-22	849266-129	CLIP	1	
-23	849266-127	CLIP	1	
		Attaching Parts		
-24	NAS1103-2	BOLT (80205)	8	
		*		

Fuselage Complete

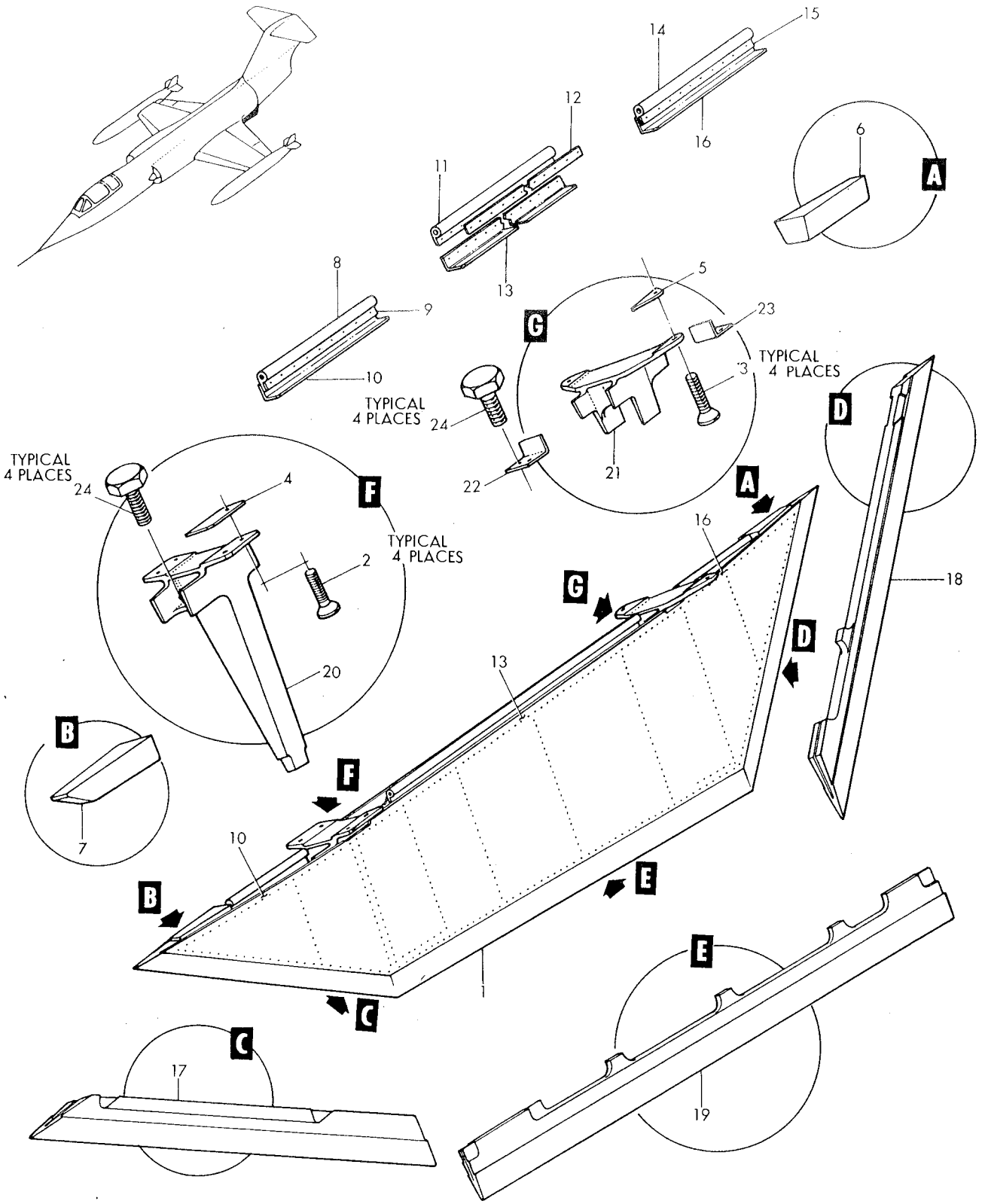

Figure 32A-Strake Assembly Aft Fuselage

Figura e particolare	NDR	DENOMINAZIONE (1 2 3 4 5 6 7)	Quant.	Codice applicab.
		RADOME, NOSE STRUCTURE AND FORWARD ANGLE OF ATTACK TRANSDUCER		
33	850963-101	. NOSE COMPLETE, fuselage station 184 forward (NHA 849071-101)	1	6701-6740
	850963-105	. NOSE COMPLETE, fuselage station 184 forward (NHA 849071-101)	1	6741-6790
	850963-109	A. NOSE COMPLETE, fuselage station 184 forward (NHA 849071-101)	1	6791-6815
	850963-113	B. NOSE COMPLETE, fuselage station 184 forward (NHA 849071-101)	1	6816-
	850963-103	. . NOSE ASSY, fuselage station 184 forward	1	6701-6740
	850963-107	. . NOSE ASSY, fuselage station 184 forward	1	6741-6790
	850963-111	. . NOSE ASSY, fuselage station 184 forward	1	6791-6815
	850693-115	. . NOSE ASSY, fuselage station 184 forward	1	6816-
	850170-101	. . . RADOME INSTL, radar nose *(see fig. 133)*	1	6701-6740
	850170-109	. . . RADOME INSTL, radar nose *(see fig. 133)*	1	6741-6815
	850170-113	. . . RADOME INSTL, radar nose *(see fig. 133)*	1	6816-
- 1	850170-103	. . . . RADOME ASSY COMPLETE, radar nose *(see fig. 133)*	1	6701-6740
	850170-111	. . . . RADOME ASSY COMPLETE, radar nose *(see fig. 133)*	1	6741-6815
	850170-115	. . . . RADOME ASSY COMPLETE, radar nose *(see fig. 133)*	1	6816-
		Attaching Parts		
- 2	NAS1203-7	. . . . SCREW (80205)	34	
- 2A	NAS1203-9	. . . . SCREW (80205)	3	
- 3	LS881-22	. . . . WASHER (36659)	34	
- 3A	AN960D10	. . . . WASHER (88044)	3	
- 4	MS21042L3	. . . . NUT (96906)	37	
		———————*———————		
	784265-7	. . . . PLUMBING INSTL, nasarr nose *(see fig. 134)*	1	
	849901-101	. . . ELECTRICAL INSTL, nose section fuselage station 184 *(see fig. 158)*	1	
	849748-101	. . . . HARNESS ASSY, nose section P-64 disconnect to T-3 *(see fig. 158)*	1	
- 9	MS3116P14-15S	. . . . . CONNECTOR, (P55) plug (angle of attac. transducer) (96906) *(see fig. 158)*	1	
	850170-105	. . . PITOT INSTL, radar nose *(see fig. 133)*	1	6701-6815
	850170-119	. . . PITOT INSTL, radar nose *(see fig. 133)*	1	6816-
	784254-103	. . . STRUCTURE INSTL, nasarr nose	1	6701-6790
	784254-105	. . . STRUCTURE INSTL, nasarr nose	1	6791-
-10	787693-1	. . . . CHART, radar dehydrator	1	
-11	783972-1	. . . . TRACK ASSY, nasarr nose *(see fig. 34)*	1	
-12	783972-2	. . . . TRACK ASSY, nasarr nose *(see fig. 34)*	1	
-13	783989-103	. . . . STRUCTURE ASSY, nasarr nose *(see fig. 34)*	1	6701-6790
	783989-117	. . . . STRUCTURE ASSY, nasarr nose *(see fig. 34)*	1	6791-
-14	761441	. . . . . PIN ASSY, radar nose index	1	
		Attaching Parts		
-15	NAS1203-8	. . . . . SCREW (80205)	4	
-16	760383-11	. . . . . SHIM, radar nose index	AR	
-17	AN960-10L	. . . . . WASHER (88044)	4	
-18	MS21042L3	. . . . . NUT (96906)	4	
		———————*———————		
	783934-1	. . . . . RING INSTL, station 169 nasarr nose	1	
-19	783934-3	. . . . . RING, station 169 nasarr nose	2	
	784256-1	. . . . . RING INSTL, station 175 nasarr nose	1	
-20	784256-3	. . . . . RING ASSY, station 175 nasarr nose	1	
	784257-1	. . . . . RING INSTL, station 182 nasarr nose	1	
-21	760383-13	. . . . . RETAINER, radar nose seal	4	
-22	760383-17	. . . . . RETAINER, radar nose seal	2	
-23	760383-18	. . . . . RETAINER, radar nose seal	1	
-24	770758-7	. . . . . RETAINER, radar nose seal	1	
-25	760383-12	. . . . . SEAL, radar nose (make from LS2950)	1	
-26	770759-1	. . . . . RING ASSY, station 182 radar nose	1	
	784259-1	. . . . . LATCH INSTL, nasarr nose *(see fig. 35)*	1	
	MS27253-2	. . . . . NAMEPLATE (96906)	1	
	761627L	. . . . . LOCK ASSY, radar nose outer *(see fig. 35)*	1	
	761627R	. . . . . LOCK ASSY, radar nose outer *(see fig. 35)*	1	
	850652-103	. . . . . PRESSURIZATION SYSTEM INSTL, radar *(see fig. 138)*	1	

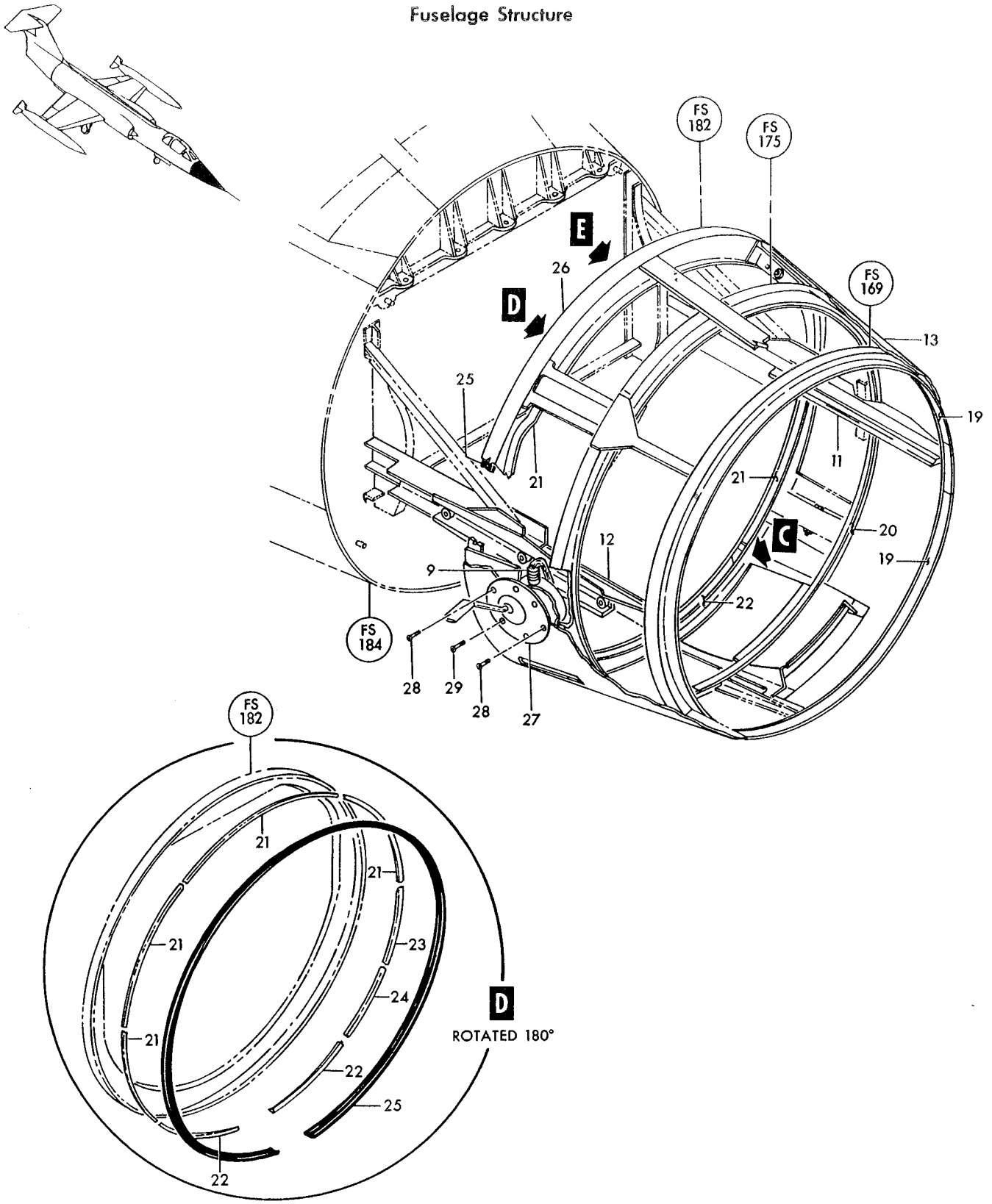

Figure 33—Radome, Nose Structure and Forward Angle of Attack Transducer (Sheet 1 of 2)

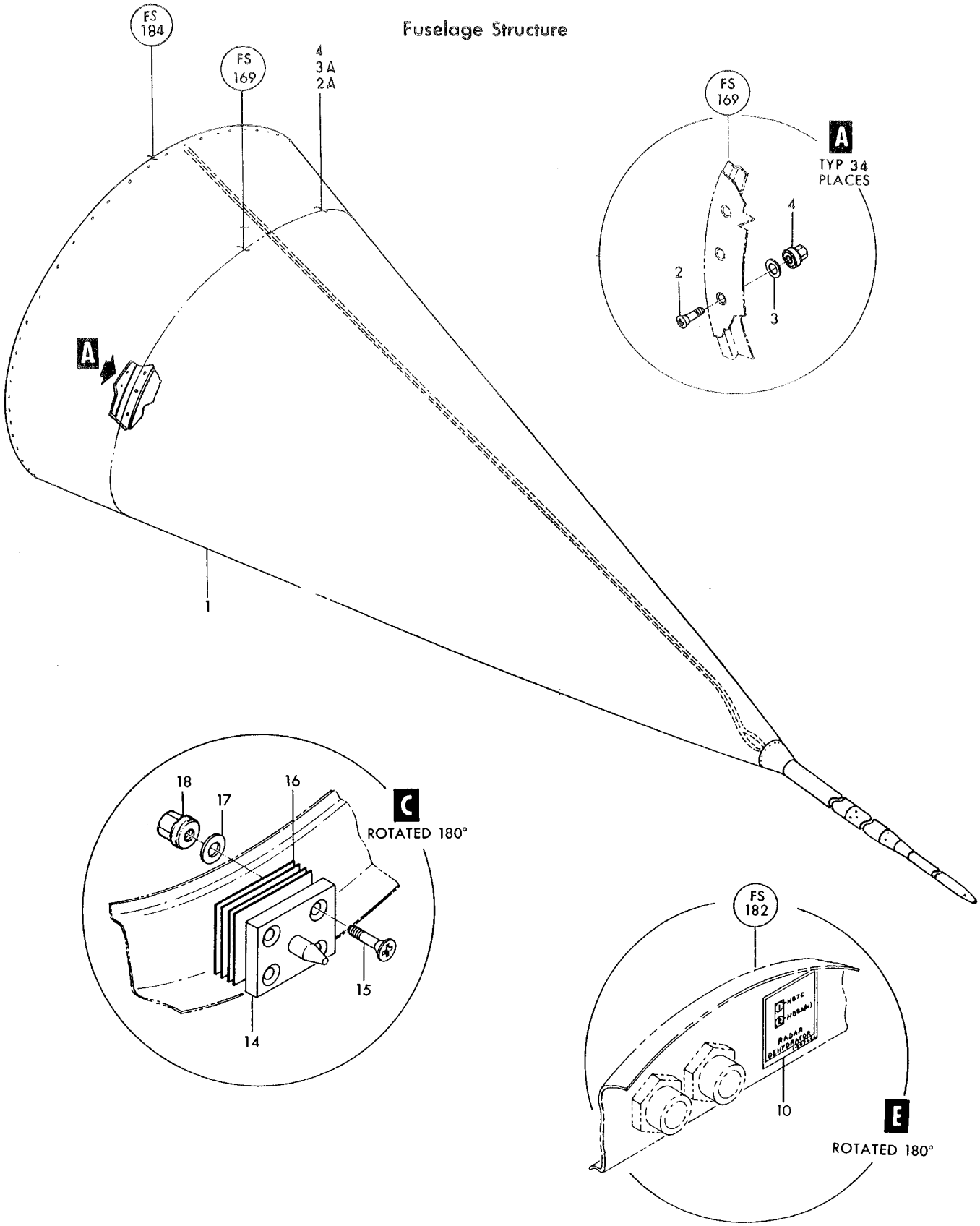

Figure 33—Radome, Nose Structure and Forward Angle of Attack Transducer (Sheet 2 of 2)

Figura e particolare	NDR	DENOMINAZIONE 1 2 3 4 5 6 7	Quant.	Codice applicab.
33	784239-107	TRANSDUCER INSTL, RH relative wind (NHA 849071-101)	1	
-27	15978-11	TRANSDUCER, (MT6) Type TA 107 vane relative wind (A0019) (98571) (Lockheed spec dwg 620590-103) (see T.O. 5F12-2-4-4) *(see fig. 158)*	1	
		Attaching Parts		
-28	NAS517-3-4	SCREW (80205)	2	
-29	NAS517-3-8	SCREW (80205)	4	

A - Removed per AA.1F-104S-OT-169
B - Reqd per AA.1F-104S-OT-169

Figura e particolare	NDR	DENOMINAZIONE 1 2 3 4 5 6 7	Quant.	Codice applicab.
		NOSE SECTION RAILS AND TRACKS		
34- 1	783972-1	TRACK ASSY, nasarr nose *(see fig. 33 for reqd)*	REF	
- 2	783972-2	TRACK ASSY, nasarr nose *(see fig. 33 for reqd)*	REF	
- 3	783972-3	. . TRACK, nasarr nose	1	
- 4	783972-4	. . TRACK, nasarr nose	1	
- 5	750356	. . BEARING, radar nose track	2	
- 6	KP4R16-2	. . BEARING (21335)	4	
- 7	NAS1204-9	. . SCREW (80205)	6	
- 8	AN960-416L	. . WASHER (88044)	6	
- 9	MS21042L4	. . NUT (96906)	6	
	784255-1	. RAIL IMSTL, nasarr nose stationary (NHA 849141-101)	1	
-10	784255-3	. . RAIL ASSY, nasarr nose stationary	1	
-11	784255-4	. . RAIL ASSY, nasarr nose sationary	1	
		Attaching Parts		
-12	NAS1203-4	. . SCREW (80205)	2	
-13	NAS1203-5	. . SCREW (80205)	2	
-14	784883-1	. . SHIM	AR	
-15	AN960D10	. . WASHER (88044)	2	
-16	AN960-10L	. . WASHER (88044)	2	
-17	MS21042L3	. . NUT (96906)	4	
		——————☼——————		
-18	783974-1	. . . STRUT, nasarr nose stationary	1	
-19	783974-2	. . . STRUT, nasarr nose stationary	1	
		Attaching Parts		
-20	NAS623-3-3	. . . SCREW (80205)	3	
-21	AN960D10	. . . WASHER (88044)	3	
-22	MS21042L3	. . . NUT (96906)	3	
		——————☼——————		
-23	783971-1	. . . RAIL, nasarr nose stationary	1	
-24	783971-2	. . . RAIL, nasarr nose stationary	1	
	784258-1	. . . LOCK INSTL, nasarr nose forward *(see fig. 35)*	1	
	784258-2	. . . LOCK INSTL, nasarr nose forward *(see fig. 35)*	1	
-25	783989-103	. STRUCTURE ASSY, nasarr nose *(see fig. 33 for reqd)*	REF	6701-6790
	783989-117	. STRUCTURE ASSY, nasarr nose *(see fig. 33 for reqd)*	REF	6791-
-26	783973-1	. . RAIL, nasarr nose	2	

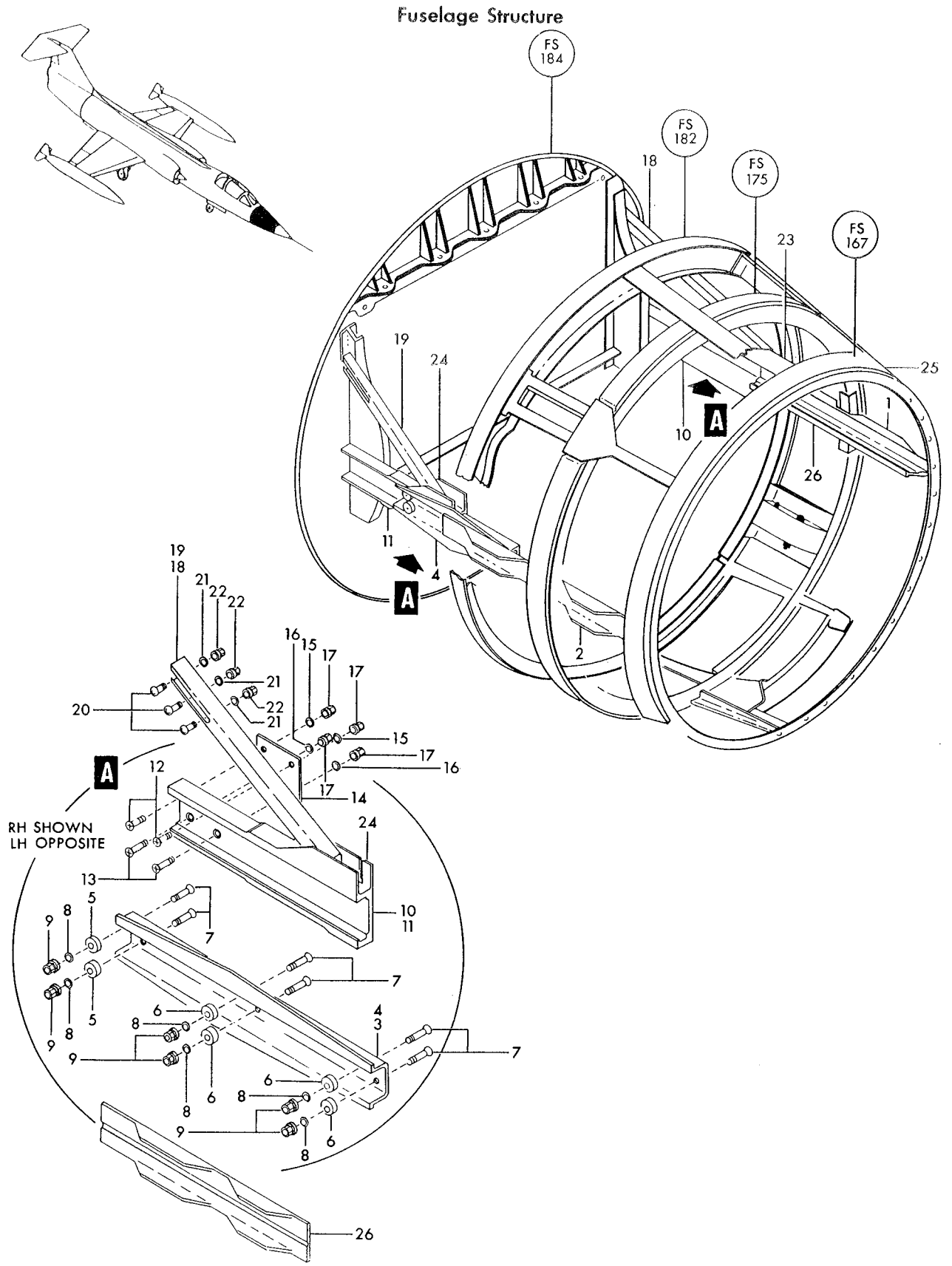

Figure 34—Nose Section Rails and Tracks

Figura e particolare	NDR	DENOMINAZIONE 1 2 3 4 5 6 7	Quant.	Codice applicab.
		NOSE SECTION LATCHES AND LOCKS		
35-1	761627L	LOCK ASSY, radar nose outer LH *(see fig. 33 for reqd)*	REF	
	761627R	LOCK ASSY, radar nose outer RH *(see fig. 33 for reqd)*	REF	
-2	NAS561P3-8	PIN (80205)	1	
-3	761625L	HANDLE, radar nose lock LH	1	
	761625R	HANDLE, radar nose lock RH	1	
-4	760521	PIN, radar nose lock latch	1	
-5	761626L	CASE ASSY, radar nose lock LH	1	
	761626R	CASE ASSY, radar nose lock RH	1	
-6	760523	SPRING, radar nose lock	1	
	784259-1	LATCH INSTL, nasarr nose *(see fig. 33 for reqd)*	REF	
-7	760798-3	SHIM, radar nose latch	AR	
-8	768435-501	LATCH ASSY, nasarr nose	1	
-9	768435-502	LATCH ASSY, nasarr nose	1	
-10	768435-503	LATCH ASSY, nasarr nose	2	
-11	778323-1	HOUSING, radar nose latch (used on 768435-501)	1	
-12	778323-2	HOUSING, radar nose latch (used on 768435-502)	1	
-13	760799	HOUSING, radar nose latch (used on 768435-503)	1	
-14	760885	PIN, radar nose latch	1	
-15	760886	PIN, radar nose latch	1	
	768931-501	HANDLE ASSY, radar nose latch	1	
-16	768434-1	HANDLE, radar nose latch	1	
-17	S4-250	SPRING, dzus (72794)	1	
-18	768931-7	FILLER, radar nose latch	1	
-19	768931-3	PLATE, radar nose latch	1	
	779075-1	RETAINER ASSY, radar nose latch	1	
-20	760801	RETAINER, radar nose latch	1	
-21	728067-1	WASHER, dzus stud retaining	1	
-22	FJ4-35	STUD, dzus (72794)	1	
-23	MS21042L4	NUT (96906)	1	
-24	AN960D416	WASHER (88044)	1	
-25	AN174H17A	BOLT (88044)	1	
-26	760884	BUSHING, radar nose latch	1	
	768433-1	HOOK ASSY, radar nose latch	1	
-27	768433-3	HOOK, radar nose latch	1	
-28	NAS561P3-10	PIN (80205)	1	
-29	727338-1	SPRING, latch handle retainer	1	
-30	760804	SPRING, radar nose latch	1	
	MS24665-132	COTTER PIN (96906)	1	
-31	AN960D6	WASHER (88044)	1	
-32	MS20392-1C43	PIN (96906)	1	
-33	760805	PLATE, radar nose index	4	
	784259-3	CLEVIS INSTL, nasarr nose *(see fig. 30 for reqd)*	REF	
-34	760807	CLEVIS ASSY, radar nose latch	4	
-35	760807-3	CLEVIS, radar nose latch	1	
-36	760807-4	PIN, radar nose latch	1	
-37	760806	NUT, radar nose index	4	
-38	728682-101	WASHER	AR	
	728683-101	SHIM WASHER	AR	
	728683-103	SHIM WASHER	AR	
	784258-1	LOCK INSTL, nasarr nose forward LH *(see fig. 34 for reqd)*	REF	
	784258-2	LOCK INSTL, nasarr nose forward RH *(see fig. 34 for reqd)*	REF	
-39	780823-1	SPRING, radar nose forward lock	1	
	780823-2	SPRING, radar nose forward lock	1	
-40	760544	PIN, radar nose forward lock	1	
-41	760530	LEVER, radar nose forward lock	1	
-42	760532L	HINGE, radar nose forward lock	1	
	760532R	HINGE, radar nose forward lock	1	
-43	760522L	DOUBLER, radar nose forward lock	1	
	760522R	DOUBLER, radar nose forward lock	1	

Fuselage Structure

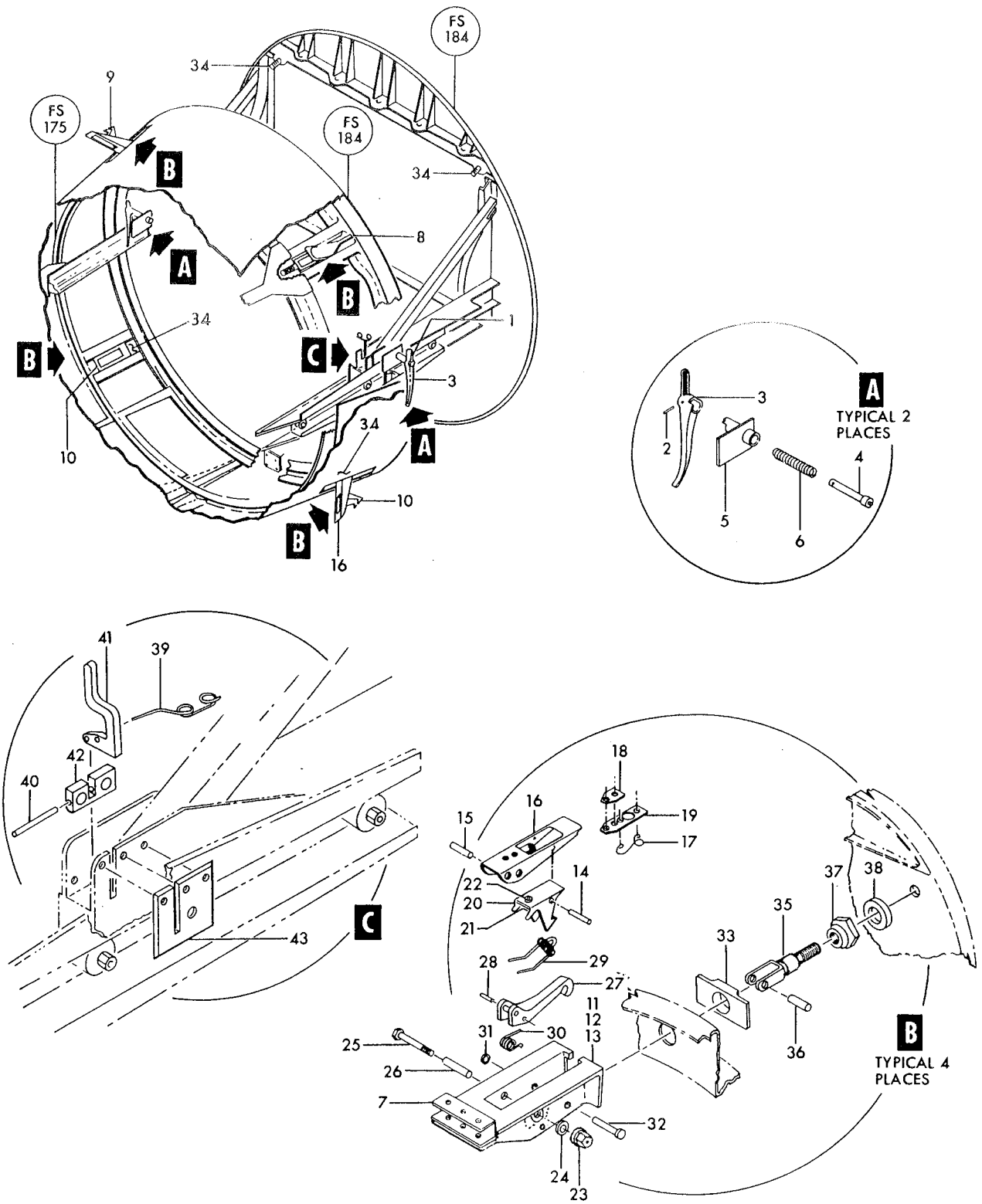

Figure 35—Nose Section Latches and Locks

Figura e particolare	NDR	DENOMINAZIONE 1 2 3 4 5 6 7	Quant.	Codice applicab.
		FUSELAGE STRUCTURE FUSELAGE STATION 184 TO 255 LEFT HAND		
36	760146-105	STRUCTURE INSTL, fuselage station 184 to 255 LH cockpit *(see fig. 30 for reqd)*	REF	
	760146-103	SHELF ASSY, LH cockpit	1	
	760069L	LONGERON INSTL, lower	1	
- 1	760144L	FITTING ASSY, fuselage station 184 lower longeron	1	
- 2	2752-064	NUT, self-locking barrel (72962)	1	
- 3	LS4893-6	RETAINER, barrel nut (36659)	1	
- 4	760146-29	COVER	1	
		Attaching Parts		
- 4A	NAS221-7	SCREW (80205)	10	
- 4B	NAS221-9	SCREW (80205)	3	
- 4C	NAS221-10	SCREW (80205)	8	
- 5	760146-30	COVER	1	
		Attaching Parts		
- 6	NAS221-7	SCREW (80205)	18	
- 7	NAS221-10	SCREW (80205)	4	
- 8	760146-39	COVER	1	
		Attaching Parts		
	NAS221-7	SCREW (80205)	14	
	763007	BRACKET INSTL, fuselage station 195 lower drag chute release *(see fig. 90)*	1	
	762899	BRACKET INSTL, fuselage station 206 lower landing gear emergency release *(see fig. 85)*	1	
	784972-5	BRACKET INSTL, LH lockpit trim *(see fig. 215)*	1	
- 9	760140L	FITTING ASSY, fuselage station 184 cockpit longeron	1	
		Attaching Parts		
	NAS517-3-5	SCREW (80205)	5	
	AN960D10	WASHER (88044)	5	
	MS21042L3	NUT (96906)	5	
-10	760146-41	COVER (probe light receptacle) *(see fig. 60)*	1	
		Attaching Parts		
	NAS517-3-1	SCREW (80205)	4	
	783029-1	HOUSING INSTL, canopy external jettison handle *(see fig. 211)*	1	
	779177-3	FITTING INSTL, rain remover duct *(see fig. 149)*	1	
	760146-47	LONGERON ASSY, fuselage station 184 to 255 LH cockpit	1	
-11	780388-1	LONGERON, fuselage station 184 to 255 LH cockpit	1	
-12	760139-3	FITTING, fuselage station 255 cockpit longeron	1	
		Attaching Parts		
-13	NAS517-3-5	SCREW (80205)	6	
-14	AN5-12	BOLT (88044)	2	
-15	AN960D10	WASHER (88044)	6	
-16	LS4893-5	RETAINER, barrel nut (36659)	2	
-17	2752-054	NUT, self-locking, barrel (72962)	2	
-18	MS21042L3	NUT (96906)	6	
	785825-1	DOOR INSTL, nose package cooling	1	
-19	785825-3	DOOR ASSY, nose package cooling	1	
-20	4002-6	STUD, camloc (71286)	4	
-21	4002H	GROMMET, camlock (71286)	4	
-22	R4G	RING, snap (71286)	4	
-23	785826-1	GASKET, nose package cooling door	1	
-24	785825-9	DOUBLER ASSY, nose package cooling	1	
	244-16C	RECEPTACLE, camloc cable (71286)	4	
-25	785827-1	CABLE ASSY, nose package cooling door	1	

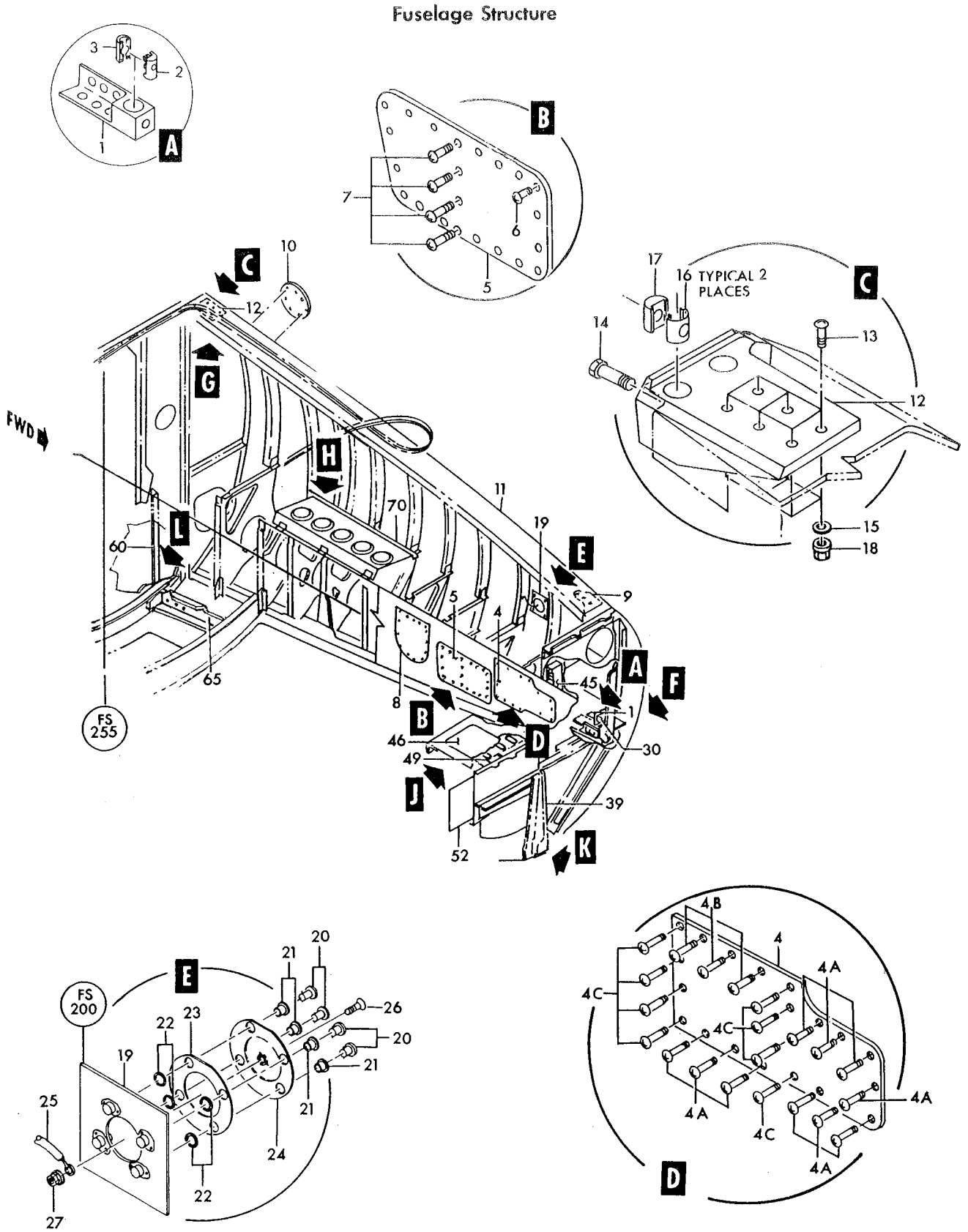

Figure 36—Fuselage Structure Fuselage Station 184 to 255 Left Hand (Sheet 1 of 2)

Fuselage Structure

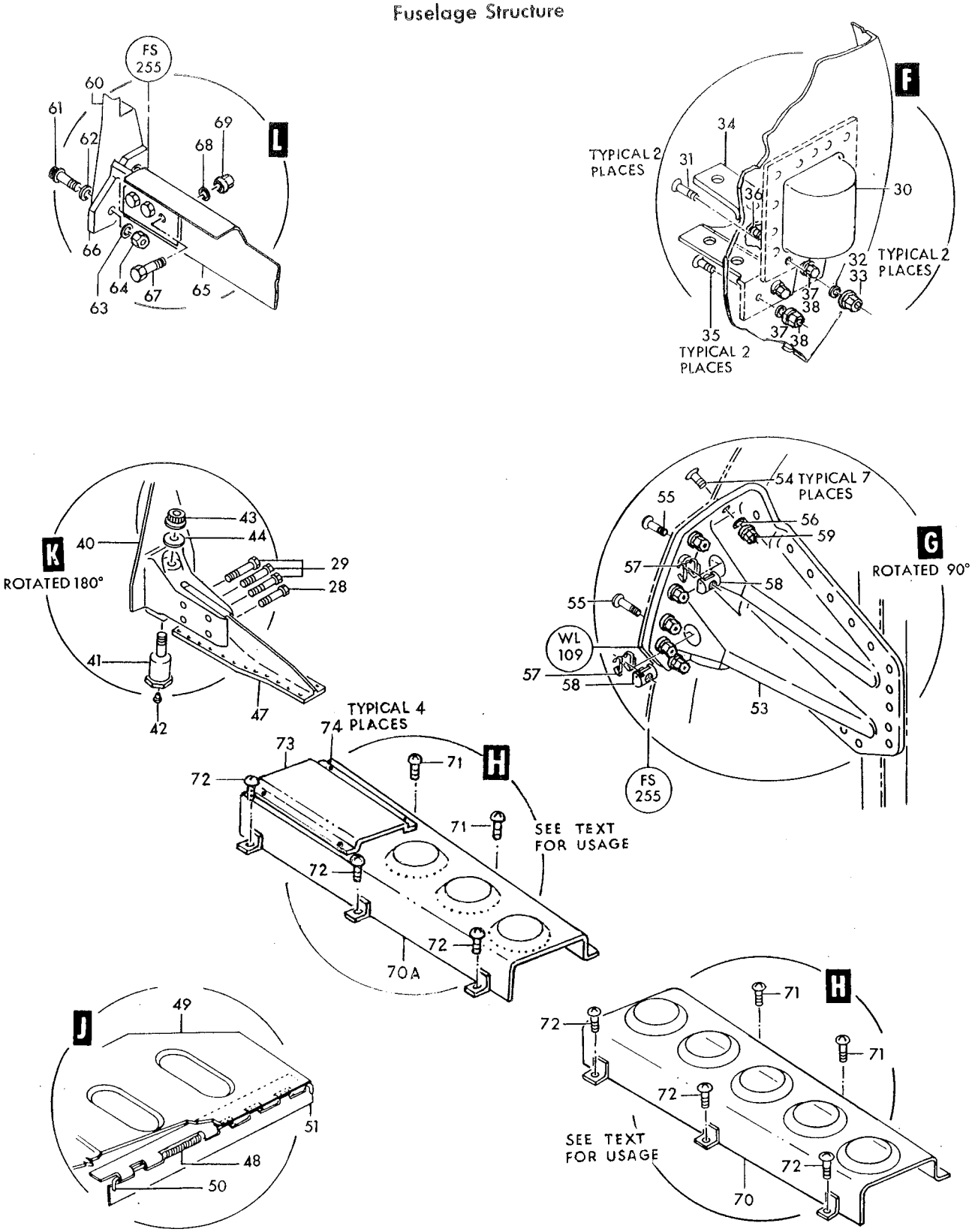

Figure 36—Fuselage Structure Fuselage Station 184 to 255 Left Hand (Sheet 2 of 2)

Figura e particolare	NDR	DENOMINAZIONE	Quant.	Codice applicab.
		Attaching Parts		
36-26	AN507-832R8	SCREW (88044)	1	
-27	MS21042L08	NUT (96906)	1	
		——— * ———		
	786197-1	DOOR INSTL, fuselage station 244 to 255 adapter access *(see fig. 61)*	1	
-28	NAS1104-11	BOLT (80205)	1	
-29	NAS1104-13	BOLT (80205)	3	
	AN960D416	WASHER (88044)	4	
	MS21042L4	NUT (96906)	4	
	783474-103	BULKHEAD ASSY, fuselage station 184 *(see fig. 30 for reqd)*	REF	
-30	783922-1	COVER, elevator horn	1	
		Attaching Parts		
-31	NAS1203-6	SCREW (80205)	2	
-32	AN960D10	WASHER (88044)	2	
-33	MS21042L3	NUT (96906)	2	
		——— * ———		
-34	760247	FITTING, shelf attachment LH	1	
		Attaching Parts		
-35	NAS623-3-5	SCREW (80205)	2	
-36	NAS623-3-6	SCREW (80205)	1	
-37	AN960D10	WASHER (88044)	3	
-38	MS21042L3	NUT (96906)	3	
		——— * ———		
-39	770124-501	FITTING ASSY, fuselage station 184 nose jack pad	1	
-40	770124-7	. FITTING, nose jack pad	1	
-41	760083	. BUSHING, nose jack pad	1	
-42	760085	. PLUG, nose jack pad	1	
-43	EB064	. NUT, self-locking (72962)	1	
-44	AN960-616	. WASHER (88044)	1	
	783129-7	SUPPORT INSTL, rudder and brake pedal	1	
-45	783131-1	. SUPPORT ASSY, brake cylinder	1	
	760146-107	SHELF ASSY, fuselage station 184 to 255 LH cockpit *(see fig. 37)*	1	
-46	764251	. COVER, pressure plate LH	1	
		Attaching Parts		
	NAS517-3-2	. SCREW (80205)	1	
		——— * ———		
-47	761040	. TEE, nose jack pad fitting support	1	
	760663-509	. BULKHEAD INSTL, fuselage station 189	1	
	760663-103	. . BULKHEAD ASSY, fuselage station 195	1	
	760663-101	. . . RAMP INSTL, fuselage station 195 *(see fig. 37)*	1	
-48	726469-3	. . . . SPRING, foot ramp	1	
-49	763534L	. . . . RAMP ASSY, foot	1	
-50	760663-49	. . . . PIN, fuselage station 189	1	
-51	760663-46	. . . . HINGE, foot ramp	1	
-52	760663-53	. . . . COVER, foot ramp	1	
	783151-105	BULKHEAD INSTL, fuselage station 255 LH *(see fig. 30 for reqd)*	REF	
	783151-107	. BULKHEAD ASSY, fuselage station 255 LH *(see fig. 208)*	1	
-53	775115-1	. FITTING, fuselage station 255 probe support	1	
		Attaching Parts		
-54	NAS517-3-5	. SCREW (80205)	7	
-55	728142-1	. SCREW	2	
-56	AN960D10	. WASHER (88044)	7	
-57	LS4893-7C	. RETAINER, barrel nut (36659)	2	
-58	SL40-720	. NUT, self-locking, barrel (97393)	2	
-59	MS21042L3	. NUT (96906)	7	
		——— * ———		
-60	784573-1	. FITTING, fuselage station 255 LH	1	
		Attaching Parts		
-61	MS21250-04-010	. BOLT (96906)	2	
-62	MS20002C4	. WASHER (96906)	2	

Figura e particolare	NDR	DENOMINAZIONE	Quant.	Codice applicab.
36-63	MS20002-4	WASHER (96906)	AR	
-64	EB048	NUT, double hex self-locking high tension (72962)	2	
		*		
	784601-101	LONGERON INSTL, fuselage station 244 to 255 lower LH and RH *(see fig. 30 for reqd)*	REF	
	784601-103	LONGERON ASSY, fuselage station 244 to 255 lower LH and RH	1	
-65	784603-1	LONGERON, fuselage station 244 to 255 lower LH	1	
		Attaching Parts		
	NAS623-3-3	SCREW (80205)	2	
	AN960D10	WASHER (88044)	2	
	MS21042L3	NUT (96906)	2	
		*		
-66	784602-1	FITTING, fuselage station 244 to 255 lower longeron LH	1	
		Attaching Parts		
-67	NAS1105-6D	BOLT (80205)	3	
-68	AN960D516	WASHER (88044)	3	
-69	MS21042L5	NUT (96906)	3	
		*		
	764367-4	TUNNEL INSTL, LH cockpit control cable *(see fig. 63 for reqd)*	REF	6701-6815
	764367-101	TUNNEL INSTL, LH cockpit control cable *(see fig. 63 for reqd)*	REF	6816-
-70	764368	TUNNEL ASSY, LH cockpit control cable	1	6701-6815
-70A	764368-101	TUNNEL ASSY, LH cockpit control cable	1	6816-
		Attaching Parts		
-71	AN520-10R10	SCREW (88044)	2	
-72	AN520-10R8	SCREW (88044)	3	
	AN960D10	WASHER (88044)	3	
	MS21042L3	NUT (96906)	3	
		*		
	852377-101	COVER ASSY, LH cockpit control cable	1	6816-
-73	852377-103	COVER, LH cockpit control cable	1	6816-
-74	2700-2	STUD, camloc fastener (71286)	4	6816-

Figura e particolare	NDR	DENOMINAZIONE 1 2 3 4 5 6 7	Quant.	Codice applicab.
		FUSELAGE STRUCTURE FUSELAGE STATION 184 TO 255 RIGHT HAND		
37	760147-101	STRUCTURE INSTL, fuselage station 184 to 255 RH cockpit *(see fig. 30 for reqd)*	REF	6701-6815
	760147-107	STRUCTURE INSTL, fuselage station 184 to 255 RH cockpit *(see fig. 30 for reqd)*	REF	6816-
	760147-43	SHELF ASSY, fuselage station 184 to 255 RH cockpit *(see fig. 89)*	1	6701-6815
	760147-109	SHELF ASSY, fuselage station 184 to 255 RH cockpit *(see fig. 89)*	1	6816-
- 1	760147-15	COVER, RH cockpit	1	
		Attaching Parts		
- 1A	NAS623-3-3	SCREW (80205)	8	
- 1B	NAS623-3-2	SCREW (80205)	3	
- 1C	NAS623-3-1	SCREW (80205)	10	
		*		
- 2	760147-16	COVER, RH cockpit	1	
		Attaching Parts		
- 2A	NAS623-3-3	SCREW (80205)	4	
- 2B	NAS623-3-1	SCREW (80205)	18	
		*		
	760069R	LONGERON INSTL, fuselage station 184 to 255 lower	1	
- 3	760144R	FITTING ASSY, fuselage station 184 lower longeron	1	
		Attaching Parts		
- 4	NAS221-11	SCREW (80205)	3	
- 5	NAS221-12	SCREW (80205)	3	
	AN960D10	WASHER (88044)	6	
	MS21042L3	NUT (96906)	6	
		*		
- 6	2752-064	NUT, self-locking, barrel (72962)	1	
- 7	LS4893-6	RETAINER, barrel nut (36659)	1	
	785070-3	BRACKET INSTL, cockpit trim RH	1	
- 8	760147-47	COVER, RH shelf assembly	3	
		Attaching Parts		
	NAS517-3-1	SCREW (80205)	12	
		*		
- 9	760147-49	COVER, RH shelf assembly	2	
		Attaching Parts		
	NAS517-3-1	SCREW (80205)	14	
		*		
	784822-5	SUPPORT INSTL, RH cockpit shelf	1	
-10	760140R	FITTING ASSY, fuselage station 184 cockpit longeron	1	
		Attaching Parts		
-11	NAS1203-4	SCREW (80205)	3	
-12	NAS1203-7	SCREW (80205)	2	
	AN960D10	WASHER (88044)	5	
	MS21042L3	NUT (96906)	5	
		*		
	760147-31	LONGERON ASSY, fuselage station 184 to 255 RH cockpit	1	
-13	760138R	LONGERON, fuselage station 184 to 255 RH cockpit	1	
-14	760139-4	FITTING, fuselage station 255 cockpit longeron	1	
		Attaching Parts		
-15	NAS623-3-5	SCREW (80205)	4	
-16	NAS623-3-6	SCREW (80205)	2	
-17	AN5-12	BOLT (88044)	2	
-18	AN960D10	WASHER (88044)	6	
-19	LS4893-5	RETAINER, barrel nut (36659)	2	
-20	2752-054	NUT, self-locking barrel (72962)	2	
-21	MS21042L3	NUT (96906)	6	
		*		
	784238-1	RETAINER INSTL, canopy seal RH *(see fig. 203)*	1	
	783031-1	DOOR INSTL, canopy torque tube access *(see fig. 60 and 208)*	1	
	783474-103	BULKHEAD ASSY, fuselage station 184 *(see fig. 30 for reqd)*	REF	
-22	783922-2	COVER, elevator horn	1	
		Attaching Parts		
-23	NAS1203-6	SCREW (80205)	2	

Fuselage Structure

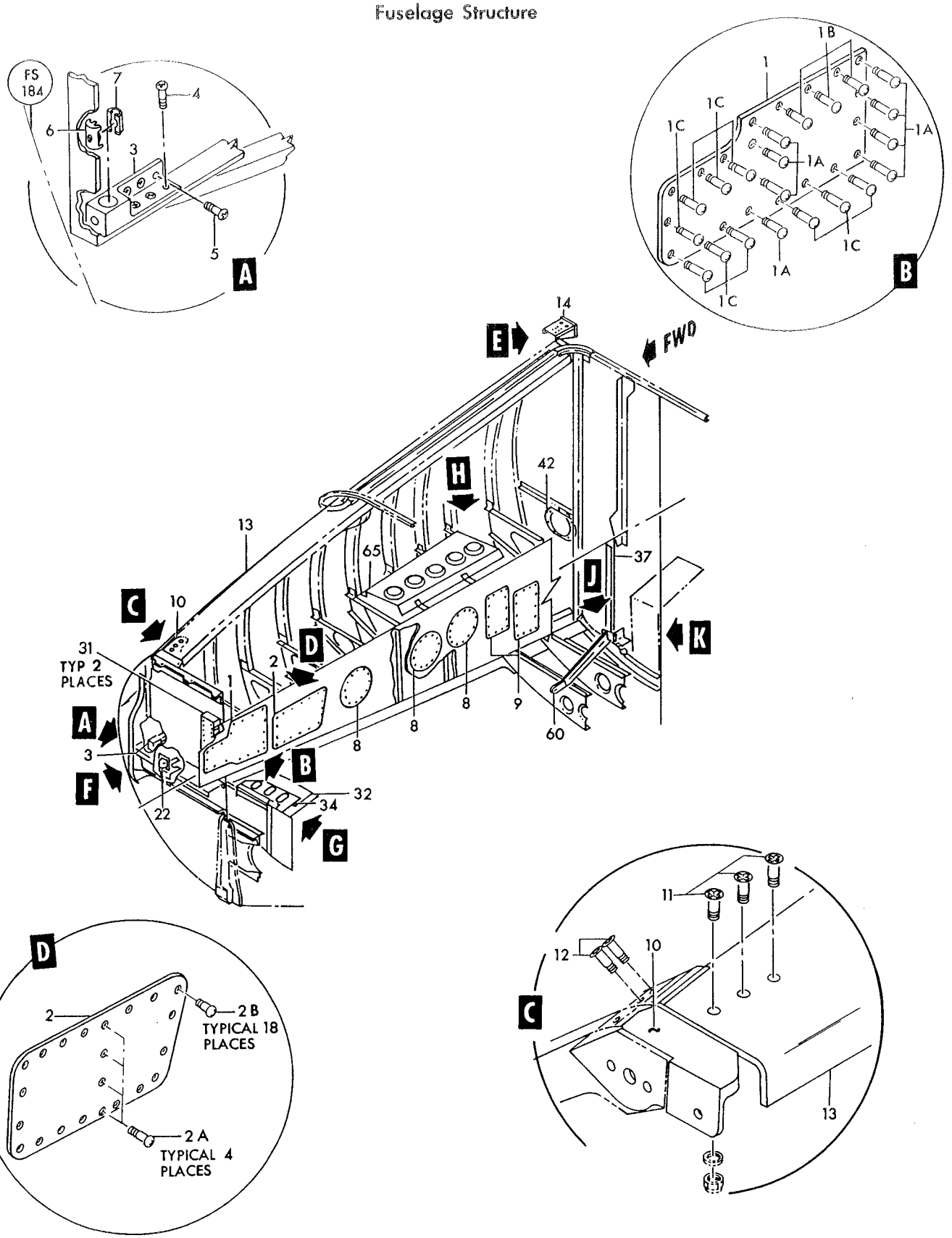

Figure 37—Fuselage Structure Fuselage Station 184 to 255 Right Hand (Sheet 1 of 2)

Fuselage Structure

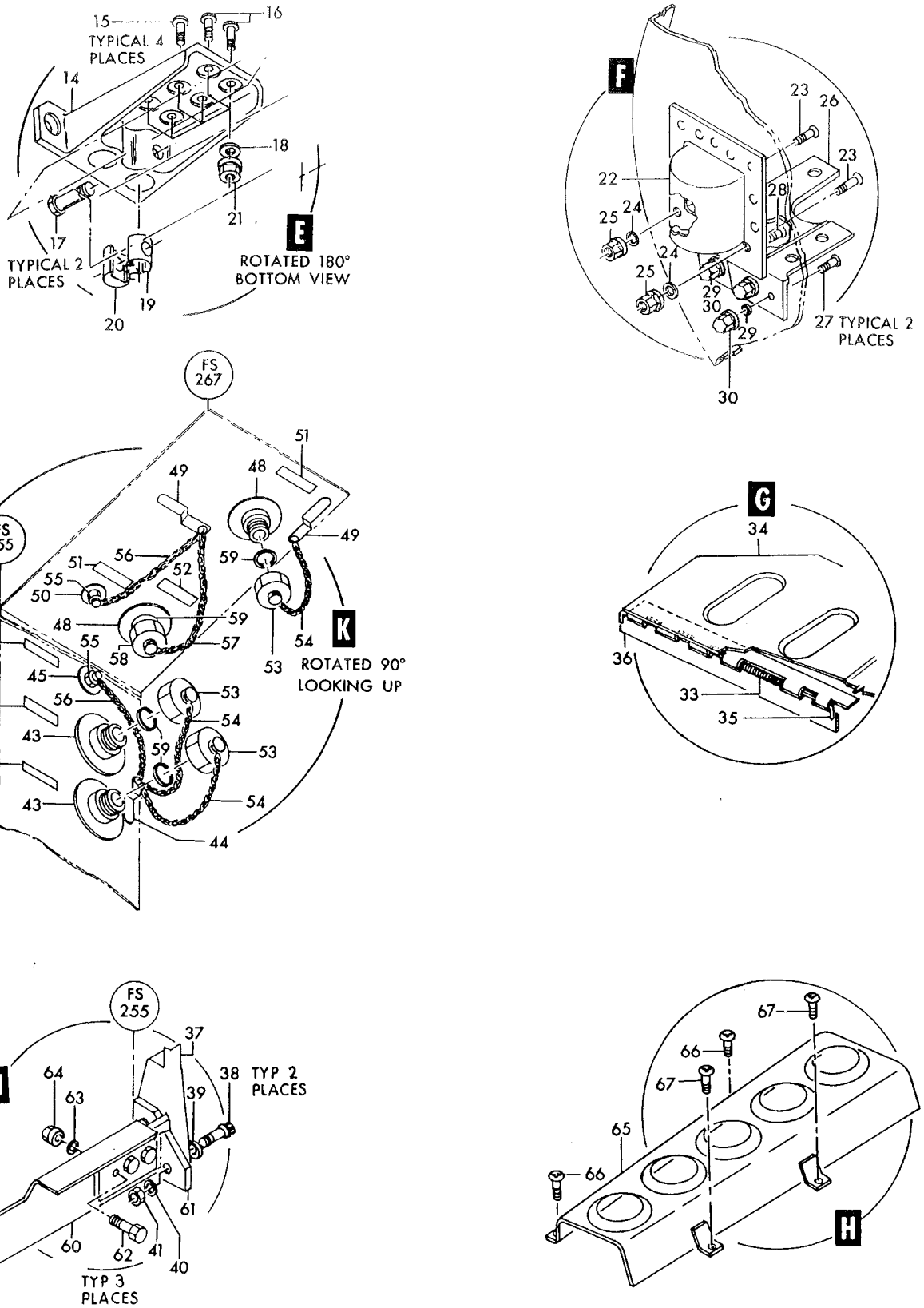

Figure 37— Fuselage Structure Fuselage Station 184 to 255 Right Hand (Sheet 2 of 2)

Figura e particolare	NDR	1 2 3 4 5 6 7 DENOMINAZIONE	Quant.	Codice applicab.
37-24	AN960D10	WASHER (88044)	2	
-25	MS21042L3	NUT (96906)	2	
		☼		
-26	760233	FITTING, shelf attachment RH	1	
		Attaching Parts		
-27	NAS623-3-5	SCREW (80205)	2	
-28	NAS623-3-6	SCREW (80205)	1	
-29	AN960D10	WASHER (88044)	3	
-30	MS21042L3	NUT (96906)	3	
		☼		
	783129-7	SUPPORT INSTL, rudder and brake pedal	1	
-31	783131-1	SUPPORT ASSY, brake cylinder	2	
	760146-107	SHELF ASSY, fuselage station 184 to 255 LH cockpit *(see fig. 36 for reqd)*	REF	
-32	851063-101	COVER ASSY, pressure plate (cockpit floor)	1	
		Attaching Parts		
	NAS517-3-2	SCREW (80205)	18	
		☼		
	760663-101	RAMP INSTL, fuselage station 195 *(see fig. 36 for reqd)*	REF	
-33	726469-3	SPRING, foot ramp	1	
-34	763534R	RAMP ASSY, foot	1	
-35	760663-49	PIN, fuselage station 189	1	
-36	760663-47	HINGE, foot ramp (NHA 760663-103)	1	
	783151-109	BULKHEAD INSTL, fuselage station 255 RH *(see fig. 30 for reqd)*	REF	
	783151-111	BULKHEAD ASSY, fuselage station 255 RH	1	
-37	784574-1	FITTING, fuselage station 255 RH	1	
		Attaching Parts		
-38	NAS624-12	BOLT (80205)	2	
-39	MS20002C4	WASHER (96906)	2	
-40	MS20002-4	WASHER (96906)	AR	
-41	EB048	NUT, double hex self-locking high tension (72962)	2	
		☼		
-42	788990-1	COVER, lower RH fuselage station 255 duct access	1	
		Attaching Parts		
	NAS623-3-2	SCREW (80205)	8	
		☼		
	785084-1	FITTING INSTL, cabin and electronic compartment pressure test	1	
-43	726374-5	FITTING, ground test air source pressure	2	
-44	LS370	LUG, gas and oil tank bonding (36659)	1	
		Attaching Parts		
	AN515-6R6	SCREW (88044)	1	
	AN960D6	WASHER (88044)	1	
	MS21042L06	NUT (96906)	1	
		☼		
-45	727176-1	FITTING, ground test pressure gauge	1	
-46	762589-3	NAMEPLATE, cabin and electronic compartment pressure test	2	
-47	762589-4	NAMEPLATE, cabin and electronic compartment pressure test	1	
	765084-3	FITTING INSTL, cabin and electronic compartment pressure test *(see fig. 38 for reqd)*	REF	
-48	726374-5	FITTING, ground test air source pressure	2	
-49	LS370	LUG, gas and oil tank bonding (36659)	2	
		Attaching Parts		
	AN515-6R6	SCREW (88044)	1	
	AN960D6	WASHER (88044)	1	
	MS21042L06	NUT (96906)	1	
		☼		
-50	727176-1	FITTING, ground test pressure gage	1	
-51	762589-5	NAMEPLATE, cabin and electronic compartment pressure test	2	
-52	762589-6	NAMEPLATE, cabin and electronic compartment pressure test	1	
	785084-7	CAP INSTL, cabin and electronic compartment pressure test (NHA 850168-101)	1	
	785084-5	CAP ASSY, cabin and electronic compartment pressure test	3	

Figura e particolare	NDR	DENOMINAZIONE 1 2 3 4 5 6 7	Quant.	Codice applicab.
37-53	177202	CAP, cabin pressure ground test	1	
-54	726249-3	CHAIN ASSY, cabin and electronic compartment pressure test	1	
-55	766219-9	CAP ASSY, fuselage station 255	2	
-56	726249-5	CHAIN ASSY, cabin and electronic compartment pressure test	1	
	727177-1	CAP, ground test gage	1	
	785084-9	CAP ASSY, cabin and electronic compartment pressure test	1	
-57	726249-13	CHAIN ASSY, cabin and electronic compartment pressure test	1	
-58	177202	CAP, cabin pressure ground test	1	
-59	177201	GASKET, cabin pressure ground test fitting	4	
	784601-101	LONGERON INSTL, fuselage station 244 to 255 lower LH and RH *(see fig. 30 for reqd)*	REF	
	784601-103	LONGERON ASSY, fuselage station 244 to 255 lower LH and RH	1	
-60	784603-2	LONGERON, fuselage station 244 to 255 lower RH	1	
		Attaching Parts		
	NAS623-3-3	SCREW (80205)	2	
	AN960D10	WASHER (88044)	2	
	MS21042L3	NUT (96906)	2	
-61	784602-2	FITTING, fuselage station 244 to 255 lower longeron RH	1	
		Attaching Parts		
-62	NAS1105-6D	BOLT (80205)	3	
-63	AN960D516	WASHER (88044)	3	
-64	MS21042L5	NUT (96906)	3	
	772095-1	TUNNEL INSTL, RH cockpit control cable *(see fig. 63 for reqd)*	REF	
-65	772096-1	TUNNEL ASSY, RH cockpit control cable	1	
		Attaching Parts		
-66	AN502-10-10	SCREW (88044)	2	
-67	AN520-10R8	SCREW (88044)	2	

Figura e particolare	NDR	1	2	3	4	5	6	7	DENOMINAZIONE	Quant.	Codice applicab.
									FUSELAGE STRUCTURE FUSELAGE STATION 255 TO 358		
38	783244-101								STRUCTURE INSTL, fuselage station 255 to 358 LH *(see fig. 30 for reqd)*	REF	
	760103-101								STRUCTURE INSTL, fuselage station 255 to 358 RH *(see fig. 30 for reqd)*	REF	6701-6765
	760103-105								STRUCTURE INSTL, fuselage station 255 to 358 RH *(see fig. 30 for reqd)*	REF	6766-
	783243-101								WEB INSTL, fuselage station 255 to 358 BL 8.5 LH	1	
	783326-103								WEB INSTL, fuselage station 255 to 358 BL 8.5 RH	1	6701-6765
	783326-107								WEB INSTL, fuselage station 255 to 358 BL 8.5 RH	1	6766-
- 1	783243-103								WEB ASSY, fuselage station 255 to 358 BL 8.5 LH *(see fig. 228)*	1	
- 2	783326-105								WEB ASSY, fuselage station 255 to 358 BL 8.5 RH	1	6701-6765
	783326-109								WEB ASSY, fuselage station 255 to 358 BL 8.5 RH	1	6766-
- 3	764591								COVER, aft gun mount fitting attachment LH *(see fig. 226)*	1	
- 4	778511-1								COVER, nose landing gear inspection hole RH	1	
									Attaching Parts		
- 5	NAS623-3-1								SCREW (80205)	2	
- 6	MS21042L3								NUT (96906)	2	
									*		
- 7	777169-503								FORMER INSTL, armament compartment door LH *(see fig. 225)*	1	
	775582-101								PAN INSTL, link ejection chuts *(see fig. 230)*	1	
- 8	779004-1	C.							CHUTE INSTL, gun debris stub case (LH) *(see fig. 230)*	1	
	785757-1								COVER INSTL, fuel tank interconnect access hole LH	1	
- 9	785757-3								COVER, fuel tank interconnect access hole	1	
									Attaching Parts		
-10	NAS623-3-2								SCREW (80205)	8	
-11	NAS623-3-3								SCREW (80205)	3	
-12	NAS623-3-4								SCREW (80205)	1	
									*		
	852069-101	D.							BRACKET, special weapons cable RH *(see fig. 190)*	1	
	774795-101								LONGERON INSTL, fuselage station 255 to 358 lower LH	1	
	774795-102								LONGERON INSTL, fuselage station 255 to 358 lower RH	1	
-13	850156-101								FITTING ASSY, fuselage station 358 lower longeron	1	
									Attaching Parts		
-14	NAS1105-12D								BOLT (80205)	2	
-15	NAS1105-10D								BOLT (80205)	2	
-16	NAS1104-10								BOLT (80205)	6	
	AN960D516								WASHER (under head) (88044)	4	
	AN960D416								WASHER (under head) (88044)	6	
	MS21042L5								NUT (96906)	4	
	MS21042L4								NUT (96906)	6	
									*		
	850156-103								FITTING, lower longeron	1	
-17	NAS577-8A								NUT, self-locking, barrel (80205)	1	
-18	NAS578-8B								RETAINER, self-locking barrel nut (80205)	1	
-19	760251								HINGE, nose landing gear door half *(see fig. 234)*	1	
									Attaching Parts		
	NAS623-3-4								SCREW (80205)	31	
	AN960-10L								WASHER (88044)	31	
	MS21042L3								NUT (96906)	31	
									*		
-20	787379-1								FILLER, LH fuselage station 326 tank support	1	
									Attaching Parts		
	NAS623-3-8								SCREW (80205)	2	
	AN960D10								WASHER (88044)	2	
	MS21042L3								NUT (96906)	2	
									*		
-21	LS4893-4								RETAINER, barrel nut (36659)	1	
-22	2752-048								BARREL NUT (72962)	1	
-23	761846L								BRACKET, nose landing gear door closing mechanism	1	
-24	761846R								BRACKET, nose landing gear door closing mechanism	1	
	784460-1								COVER ASSY, nose landing gear uplock inspection hole LH	1	
-25	784460-3								COVER, nose landing gear uplock inspection hole	1	

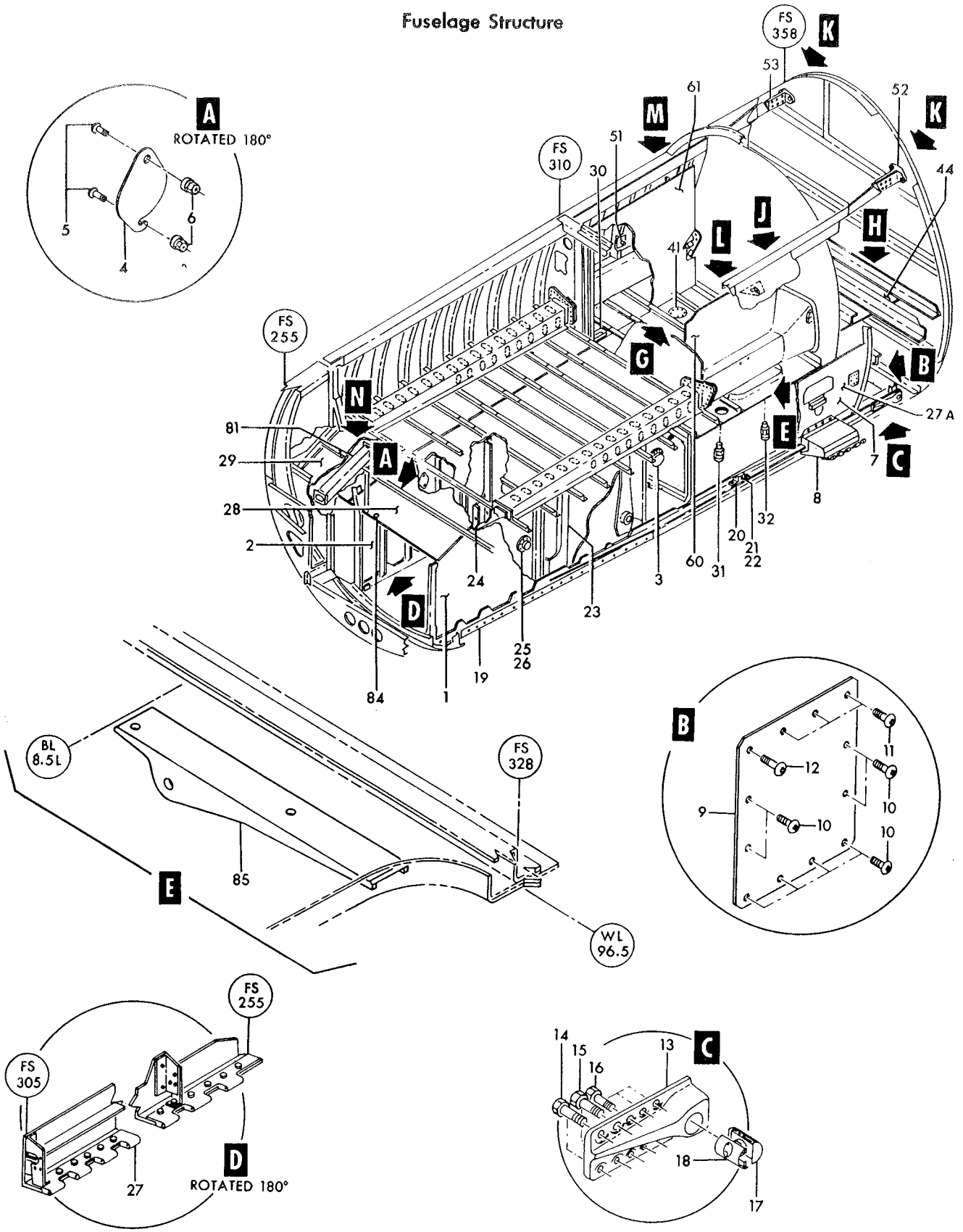

Figure 38—Fuselage Structure Fuselage Station 255 to 358 (Sheet 1 of 3)

Fuselage Structure

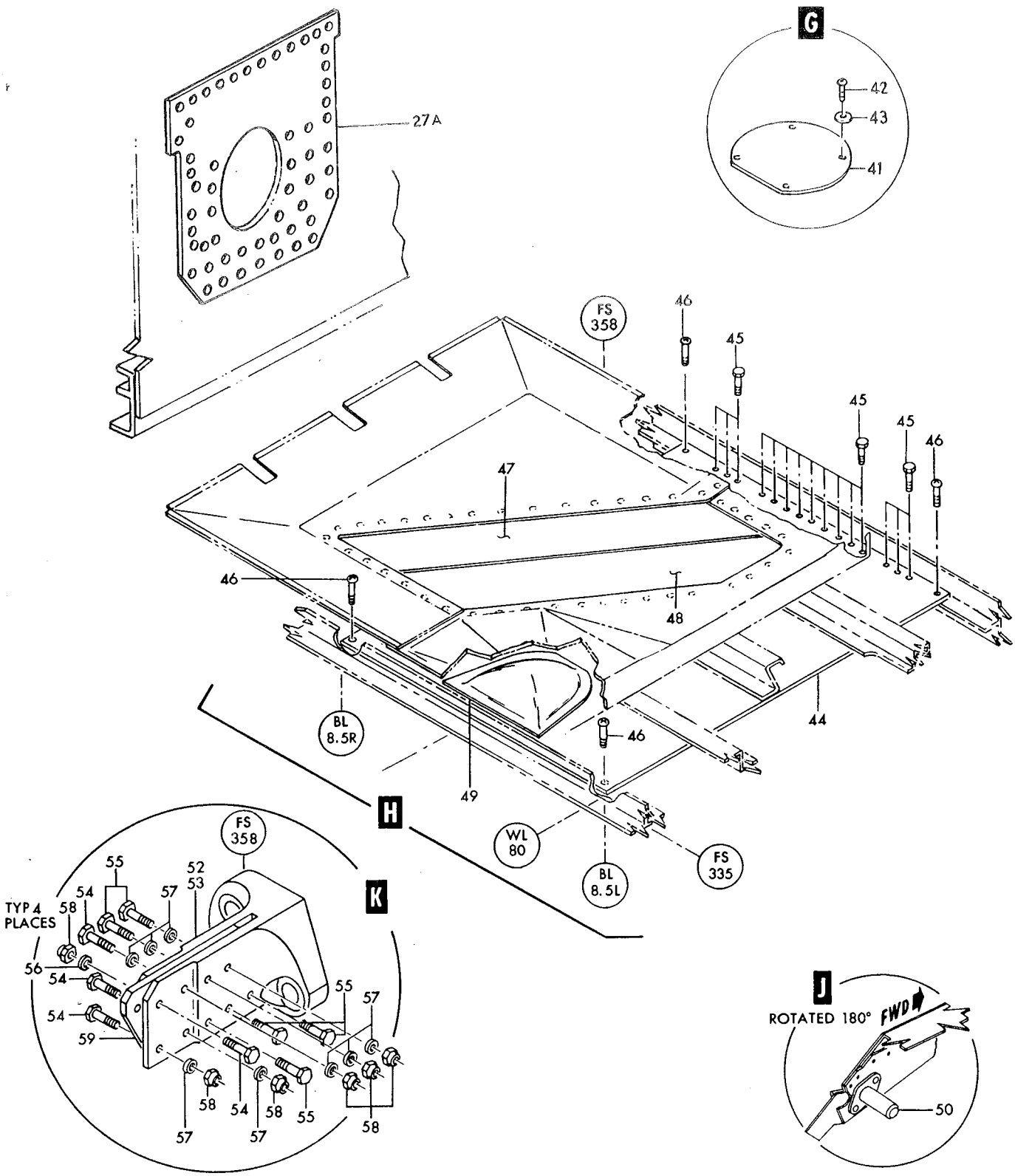

Figure 38—Fuselage Structure Fuselage Station 255 to 358 (Sheet 2 of 3)

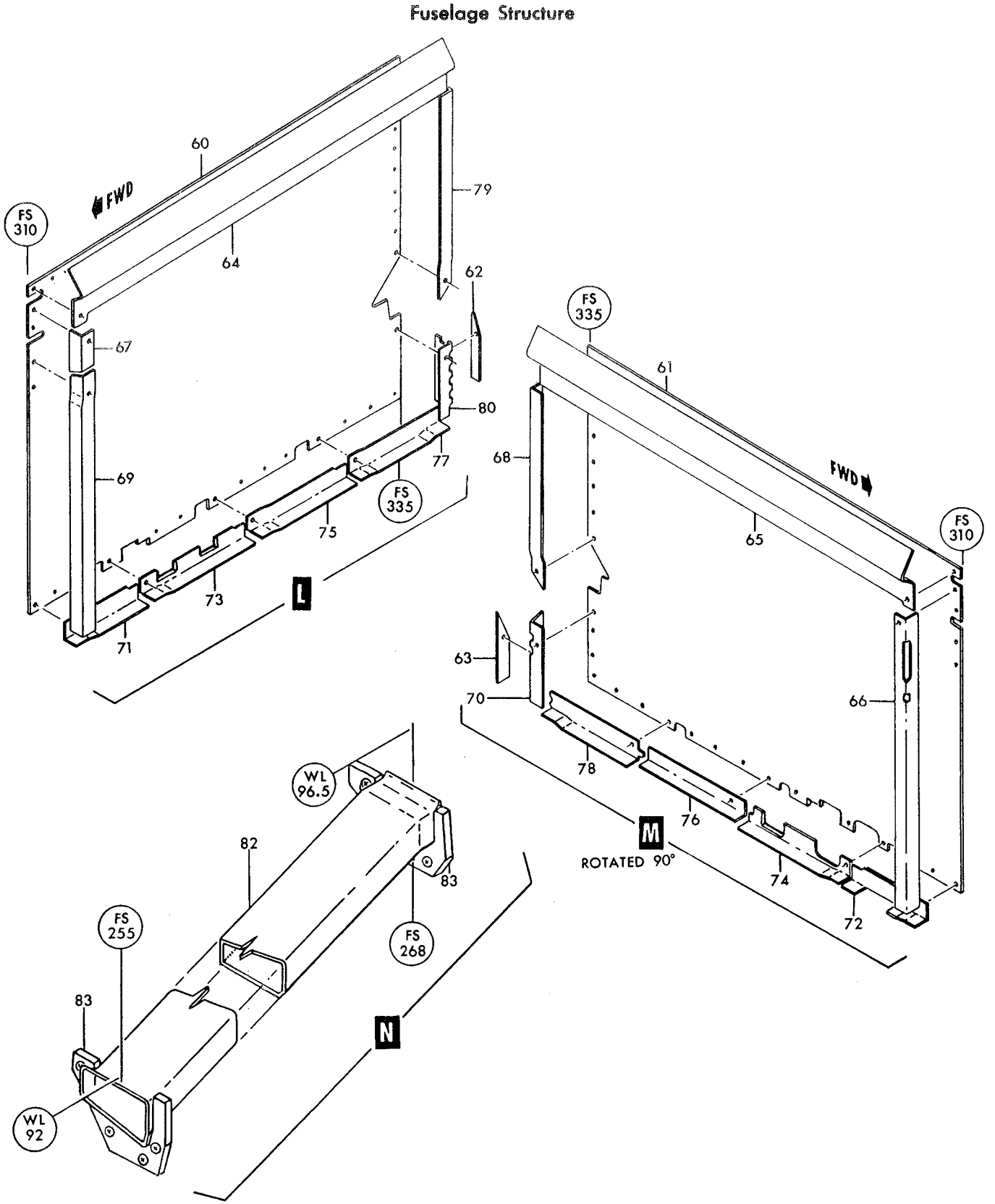

Figure 38—Fuselage Structure Fuselage Station 255 to 358 (Sheet 3 of 3)

Figura e particolare	NDR	1	2	3	4	5	6	7	DENOMINAZIONE	Quant.	Codice applicab.
38-26	784460-5								GASKET, nose landing gear uplock inspection hole	1	
	761380-4								HINGE INSTL, electronic compartment door RH	1	
-27	762220								HINGE, door support half	1	
-27A	777707-1								COVER INSTL, LH gun stub case chute *(see fig. 230)*	1	
	783241-1	C.							FLOOR INSTL, fuselage station 255 to 335 wl 96,5 LH	1	
	783241-101								FLOOR INSTL, fuselage station 255 to 335 wl 96,5 LH	1	
	783325-101								FLOOR INSTL, fuselage station 255 to 335 wl 96,5 RH	1	
	783241-3	C.							FLOOR ASSY, fuselage station 255 to 335 LH	1	
	783241-7	C.							FLOOR, fuselage station 235 to 335 LH	1	
-28	783241-103								FLOOR ASSY, fuselage station 255 to 335 LH	1	
-29	783325-103								FLOOR ASSY, fuselage station 255 to 335 RH	1	
	783241-107								FLOOR, fuselage station 255 to 335 LH	1	
	784399-3								SUPPORT INSTL, fuselage station 261 to 310 air conditioning package RH *(see fig. 155)*	1	
-30	789222-1								FAIRLEAD, fuselage station 310 to 315 RH wiring	1	
	763248								BRACKET INSTL, fuselage station 322 to 328 turbine pump RH control pulley *(see fig. 89)*	1	
-31	763751	C.							FITTING, track support inboart LH	1	
-32	763752								FITTING, track support outboard LH	1	
	760158-18								FITTING INSTL, armament compartment door LH *(see fig. 225)*	1	
	785084-3								FITTING INSTL, cabin and electronic compartment pressure test LH *(see fig. 37)*	1	
	761379-501								STRUCTURE INSTL, fuselage station 315 to 335 RH floor *(see fig. 50)*	1	
-41	778412-1	C.							COVER, gun mount access hole (LH)	1	
									Attaching Parts		
-42	NAS623-3-2	C.							SCREW (80205)	4	
-43	AN960-10L	C.							WASHER (88044)	4	
									*		
	783242-101								FLOOR INSTL, fuselage station 335 to 358 wl 80 LH	1	
-44	783242-103								FLOOR ASSY, fuselage station 335 to 358 wl 80 LH	1	
	783242-5								FLOOR, fuselage station 335 to 358 LH	1	
									Attaching Parts		
-45	NAS1103-4								BOLT (80205)	15	
-46	NAS623-3-4								SCREW (80205)	4	
	AN960D10								WASHER (88044)	19	
	MS21042L3								NUT (96906)	19	
									*		
	851205-101								FLOOR INSTL, auxiliary fuel tank	1	
	784374-15								COVER ASSY, auxiliary fuel tank floor	1	
	784374-17								COVER ASSY, auxiliary fuel tank floor	1	
-47	771147-15								COVER, auxiliary fuel tank floor	1	
-48	771147-17								COVER, auxiliary fuel tank floor	1	
-49	777071-1								PAN, fuselage station 335 to 340 wl 80 web	1	
-50	2150								FITTING, female ball-lok pin (84256)	1	
-51	727001-1								SCREW, ammunition loader RH	1	
	760248-507								LONGERON INSTL, fuselage station 255 to 358 upper LH *(see fig. 30 for reqd)*	REF	6701-6765
	760248-101								LONGERON INSTL, fuselage station 255 to 358 upper LH *(see fig. 30 for reqd)*	REF	6766-
	760248-509								LONGERON INSTL, fuselage station 255 to 358 upper RH *(see fig. 30 for reqd)*	REF	
	760248-65								LONGERON ASSY, upper LH	1	6701-6765
	760248-103								LONGERON ASSY, upper LH	1	6766-
	760248-67								LONGERON ASSY, upper RH	1	
	784446-3								ANGLE INSTL, electronic compartment transverse beam LH *(see fig. 48)*	1	
	784446-5								ANGLE INSTL, electronic compartment transverse beam RH *(see fig. 48)*	1	
-52	766212-1								FITTING, upper longeron fuselage station 358 LH	1	
-53	766212-2								FITTING, upper longeron fuselage station 358 RH	1	
									Attaching Parts		
-54	NAS1104-10								BOLT (80205)	4	
-55	NAS1104-12								BOLT (80205)	5	
-56	AN960-416L								WASHER (88044)	1	
-57	AN960D416								WASHER (88044)	8	

Figura e particolare	NDR	1	2	3	4	5	6	7	DENOMINAZIONE	Quant.	Codice applicab.
38-58	MS21042L4								NUT (96906)	9	
									✲		
-59	766501-1								SHIM, fuselage station 358 upper longeron	AR	
	784792-105								LINER INSTL, LH ammunition compartment fuel tank *(see fig. 30 for reqd)*	REF	
	784899-107								LINER INSTL, RH ammunition compartment fuel tank *(see fig. 30 for reqd)*	REF	6701-6790
	784899-109								LINER INSTL, RH ammunition compartment fuel tank *(see fig. 30 for reqd)*	1	6791-
	784792-101	A.							PANEL INSTL, lower LH ammunition compartment fuel tank liner	1	
-60	784794-101	A.							PANEL, lower LH ammunition compartment fuel tank liner	1	
	784899-105	A.							PANEL ASSY, RH ammunition compartment fuel tank liner	1	
-61	784900-101	A.							PANEL, RH ammunition compartment fuel tank liner	1	
									Attaching Parts		
	AN515-8R6	A.							SCREW (88044)	48	
	AN515-8R8	A.							SCREW (88044)	2	
	NAS517-2-2	A.							SCREW (80205)	1	
									✲		
	784792-103								SUPPORT INSTL, LH ammunition compartment fuel tank	1	
	784899-101								SUPPORT INSTL, RH ammunition compartment fuel tank	1	6701-6790
	784899-111								SUPPORT INSTL, RH ammunition compartment fuel tank	1	6791-
-62	784804-1								SPACER, LH fuel tank liner support	1	
-63	784909-1								SPACER, RH fuel tank liner support	1	
-64	784801-1								SUPPORT, LH fuselage station 310 to 335 fuel tank liner	1	
-65	784906-1								SUPPORT, RH fuselage station 310 to 335 fuel tank liner	1	
-66	784905-101								SUPPORT, RH fuselage station 310 bulkhead fuel tank liner	1	
-67	784800-1								SUPPORT, upper LH fuselage station 310 bulkhead fuel tank liner	1	
-68	784907-1								SUPPORT, upper RH fuselage station 310 bulkhead fuel tank liner	1	
-69	784799-1								SUPPORT, lower LH fuselage station 310 bulkhead fuel tank liner	1	
-70	784908-1								SUPPORT, lower RH fuselage station 310 bulkhead fuel tank liner	1	
-71	784798-1								SUPPORT, LH fuselage station 310 to 315 fuel tank liner	1	
-72	789225-3								SUPPORT ASSY, RH fuselage station 310 to 315 fuel tank liner	1	
-73	784797-101								SUPPORT, LH fuselage station 315 to 322 fuel tank liner	1	
-74	784903-101								SUPPORT, RH fuselage station 315 to 322 fuel tank liner	1	
-75	784796-1								SUPPORT, LH fuselage station 322 to 328 fuel tank liner	1	
-76	784902-1								SUPPORT, RH fuselage station 322 to 328 fuel tank liner	1	
-77	784795-1								SUPPORT, LH fuselage station 328 to 335 fuel tank liner	1	
-78	784901-1								SUPPORT, RH fuselage station 328 to 335 fuel tank liner	1	
-79	784802-1								SUPPORT, upper LH fuselage station 335 bulkhead fuel tank liner	1	
-80	784803-1								SUPPORT, lower LH fuselage station 335 bulkhead fuel tank liner	1	
	849906-101								ELECTRICAL INSTL, RH electrical bay *(see fig. 30 for reqd)*	REF	
-81	849981-101								DUCT INST, fuselage station 255 to 268 special stores *(see fig. 173 for reqd)*	REF	
-82	849982-101								DUCT, fuselage station 255 to 268	1	
-83	849983-101								FAIRLEAD, fuselage station 268 special stores	2	
									Attaching parts		
	AN515-8R8								SCREW (88044)	6	
	AN960D8								WASHER (88044)	3	
	MS21042L08								NUT (96906)	3	
									✲		
	795947-1								DRAIN PORT INSTL, electronic compartment *(see fig. 30 for reqd)*	REF	
-84	740B8X								VALVE, drain poppet (91511) (Lockheed spec dwg 634178-1)	1	
	795948-1								FITTING, electronic compartment drain port	1	
	MS29512-6								GASKET (96906)	1	
-85	787375-1	B.							FITTING, upper tank support LH	1	

A - All parts marked with letter A serve also for gun to fuel tank conversion kit 850191-105
B - All parts marked with letter B serve only for gun to fuel tank conversion kit 850191-105
C - Only for FB
D - Reqd per AA.1F-104S-OT-150A

Figura e particolare	NDR	DENOMINAZIONE (1 2 3 4 5 6 7)	Quant.	Codice applicab.
		FUSELAGE STRUCTURE FUSELAGE STATION 255 TO 358 (CONTINUED)		
39	764707-101	TUNNEL INSTL, fuselage station 267 to 335 LH control cable *(see fig. 63 for reqd)*	REF	
	764708-101	TUNNEL INSTL, fuselage station 267 to 335 RH control cable *(see fig. 63 for reqd)*	REF	
-1	764709	TRANSITION ASSY, fuselage station 335 LH control cable tunnel	1	
-2	764710	TRANSITION ASSY, fuselage station 335 RH control cable tunnel	1	
		Attaching Parts		
-3	AN4-5A	BOLT (88044)	4	
-4	AN960D416	WASHER (88044)	4	
-5	MS21042L4	NUT (96906)	4	
-6	762344	SEAL ASSY, control cable tunnel	1	
		Attaching Parts		
-7	AN520-10R18	SCREW (88044)	2	
-8	AN960D10	WASHER (88044) (RH only)	2	
	LS881-4	WASHER, aluminum (36659) (LH only)	2	
-9	762344-3	SEAL, control cable tunnel (match comp do not stk sep)	1	
-10	762344-4	SEAL, control cable tunnel (match comp do not stk sep)	1	
-11	AN520-10R32	SCREW (88044)	2	
-12	AN960D10	WASHER (88044)	2	
-13	MS21042L3	NUT (96906)	2	
-14	764713	FLANGE ASSY, fuselage station 310 LH control cable tunnel aft	1	
-15	764714	FLANGE ASSY, fuselage station 310 RH control cable tunnel aft	1	
-16	AN520-10R8	SCREW (88044)	6	
-17	762470	FLANGE, LH control cable tunnel forward	1	
-18	762471	FLANGE, RH control cable tunnel forward	1	
	764711-101	BASE ASSY, LH control cable ammunition compartment	1	
-19	764711-103	BASE, LH control cable ammunition compartment	1	
-20	764712-101	COVER ASSY, LH tunnel control ammunition compartment	1	
		Attaching Parts		
-21	AN515-8R8	SCREW (88044)	16	
-21A	AN515-8R8	SCREW (88044)	10	6711-
-22	AN960D8	WASHER (88044)	9	
-23	MS21042L08	NUT (96906)	9	
-24	764715-101	TUNNEL ASSY, RH control cable ammunition compartment	1	
		Attaching Parts		
-25	AN515-8R8	SCREW (88044)	25	
-26	AN515-8R8	SCREW (88044)	4	
-27	AN515-8R14	SCREW (88044)	2	
-28	AN960D8	WASHER (88044)	12	
-29	MS21042L08	NUT (96906)	8	
-30	MS21042L08	NUT (96906)	4	
-31	762525	TUNNEL ASSY, LH control cable forward	1	
-32	762526	TUNNEL ASSY, RH control cable forward	1	
		Attaching Parts		
-33	AN515-8R14	SCREW (88044) (16 reqd on 762525 and 14 reqd on 762526)	AR	
-34	NAS43DD3-26	SPACER (80205) (16 reqd on 762525 and 14 reqd on 762526)	AR	
-35	AN960D8	WASHER (88044) (16 reqd on 762525 and 14 reqd on 762526)	AR	
-36	MS21042L08	NUT (96906) (16 reqd on 762525 and 14 reqd on 762526)	AR	
	763978	PLATE INSTL, leveling *(see fig. 30 for reqd)*	REF	
	763978-3L	BRACKET ASSY, leveling plate	2	
	763978-3R	BRACKET ASSY, leveling plate	1	
-37	763978-4L	BRACKET, leveling plate	1	
-38	763978-4R	BRACKET, leveling plate	1	
	763978-5	WASHER, leveling plate	1	
-39	231900	PLATE, leveling	1	

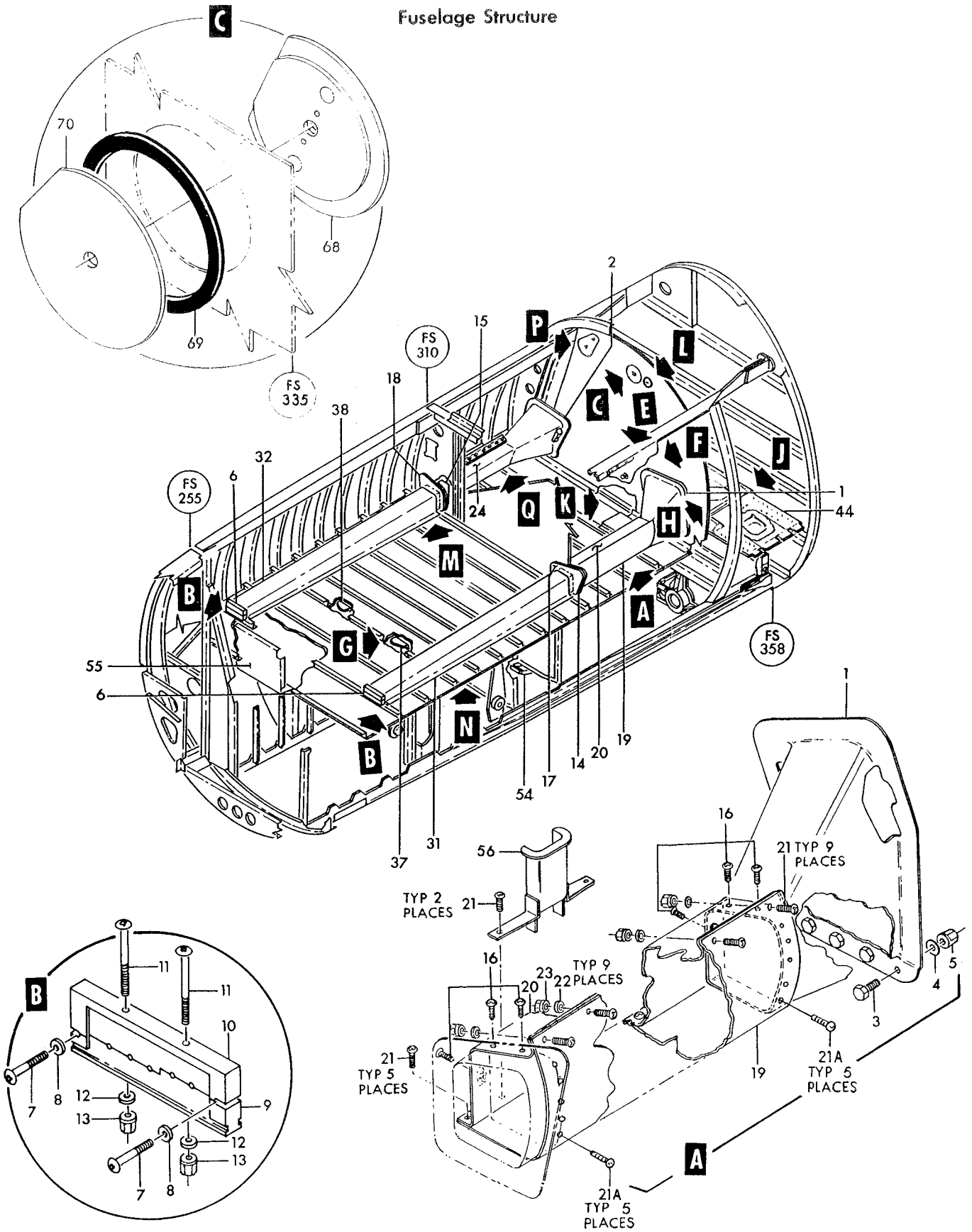

Figure 39—Fuselage Structure Fuselage Station 255 to 358 (Continued)(Sheet 1 of 3)

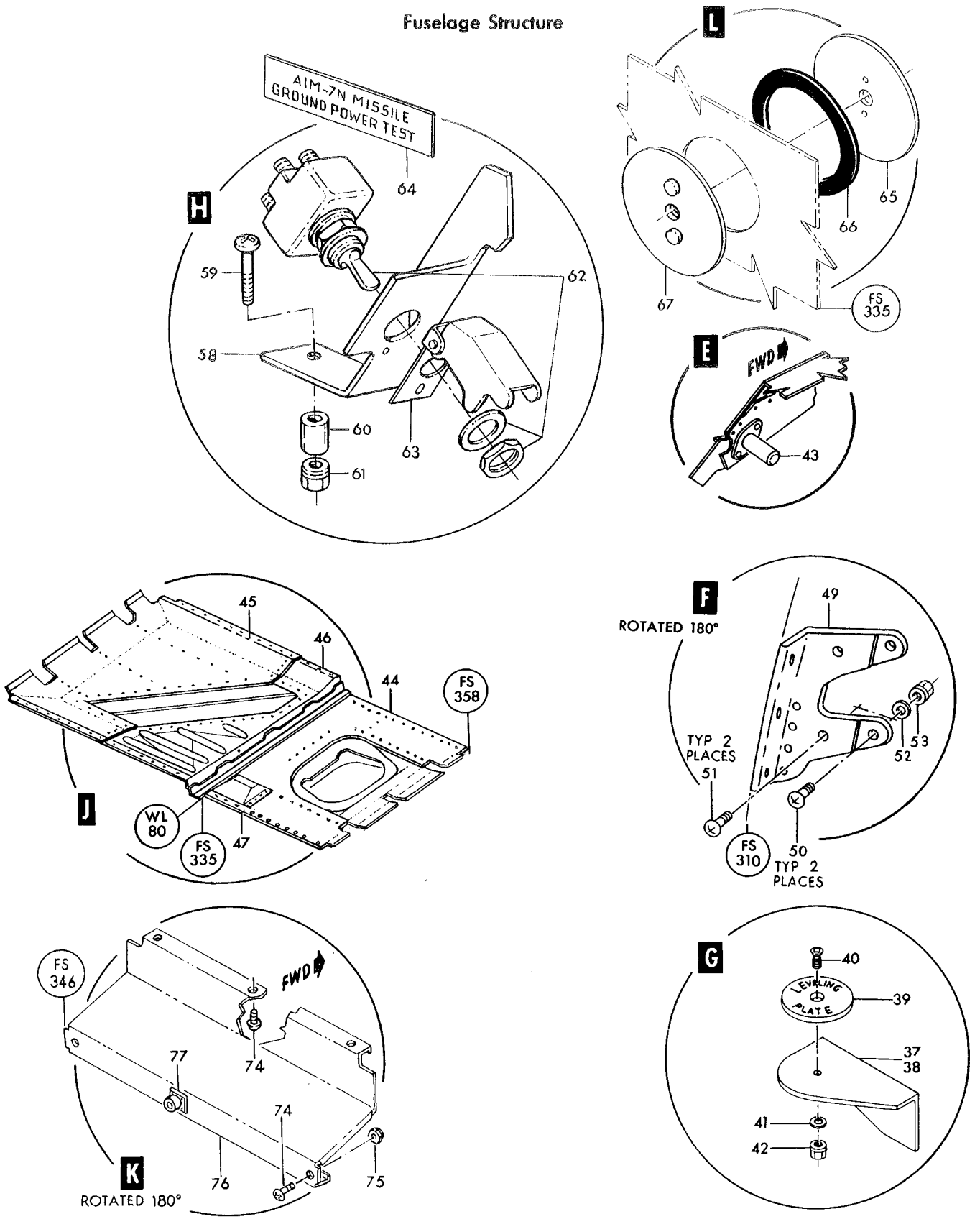

Figure 39—Fuselage Structure Fuselage Station 255 to 358 (Continued) (Sheet 2 of 3)

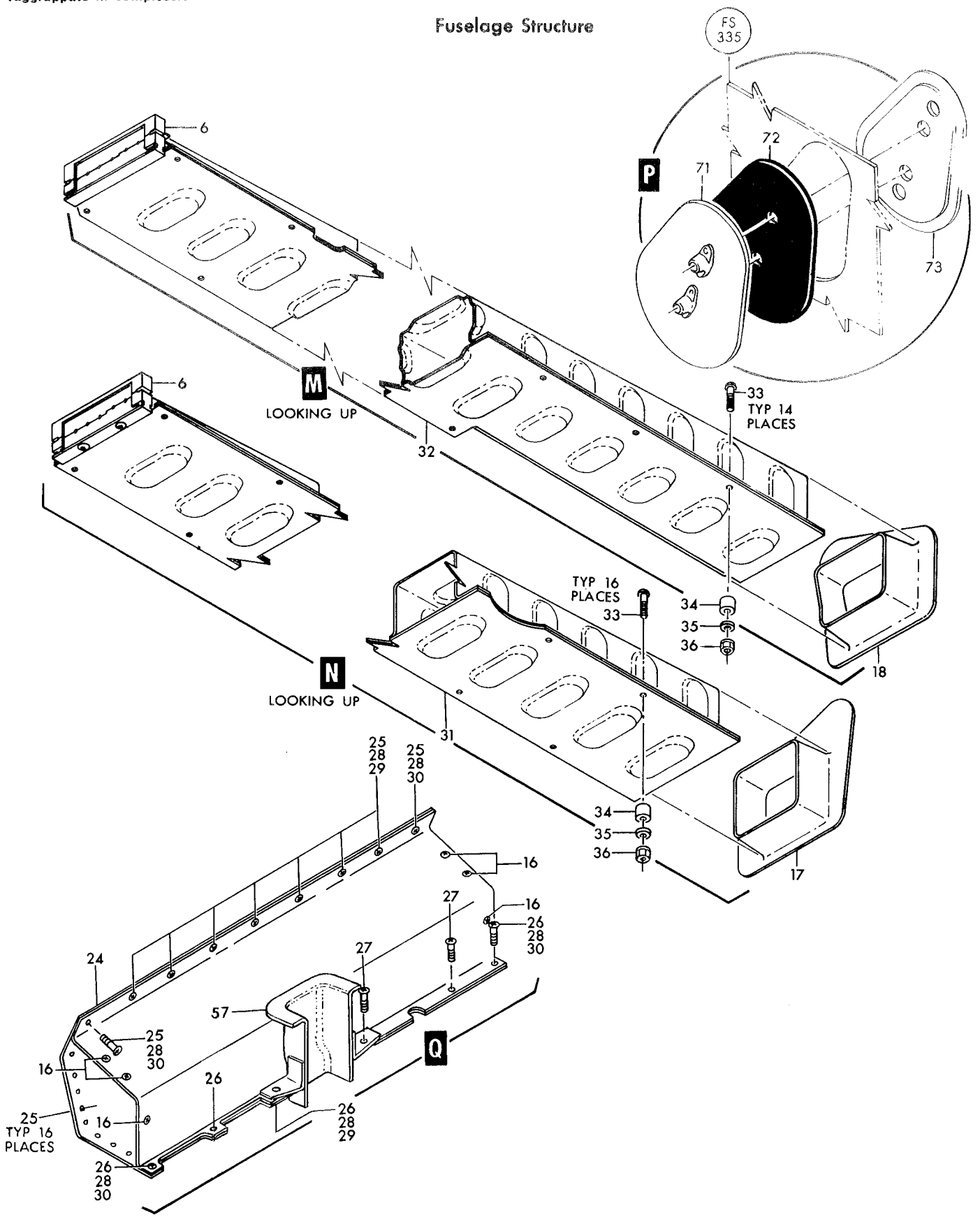

Figure 39—Fuselage Structure Fuselage Station 255 to 358 (Continued) (Sheet 3 of 3)

Figura e particolare	NDR	1 2 3 4 5 6 7 DENOMINAZIONE	Quant.	Codice applicab.
		Attaching Parts		
39-40	AN507-632R6	. . . SCREW (88044)	1	
-41	AN960D6	. . . WASHER (88044)	1	
-42	MS21042L06	. . . NUT (96906)	1	
		——————✲——————		
	764478-4L	. FITTING INSTL, anti-personnel screen *(see fig. 30 for reqd)*	REF	
	764478-4R	. FITTING INSTL, anti-personnel screen *(see fig. 30 for reqd)*	REF	
-43	2150	. . FITTING, ball-lok female (84256)	1	
	851205-103	. FLOOR INSTL, auxiliary fuel tank *(see fig. 30 for reqd)*	REF	
-44	851205-105	. . FLOOR, auxiliary fuel tank *(see fig. 100)*	1	
	785347-19	. . ATTACHMENT INSTL, auxiliary fuel tank lacing *(see fig. 101)*	1	
-45	773422-101	. . COVER, hydraulic lines	1	
-46	773423-501	. . COVER ASSY, control cable	1	
-47	778453-1	. . PAN, auxiliary fuel tank floor	1	
		Attaching Parts		
	MS24621-29	. . SCREW (96906)	24	
		——————✲——————		
	783344-125	. WEB INSTL, fuselage station 310 pressure bulkhead LH *(see fig. 30 for reqd)*	REF	
	783344-117	. WEB INSTL, fuselage station 310 pressure bulkhead RH *(see fig. 30 for reqd)*	REF	
	783344-127	. . WEB ASSY, pressure bulkhead LH	1	
	783344-121	. . WEB ASSY, pressure bulkhead RH	1	
-49	775116-1	. . . FITTING, probe support LH	1	
		Attaching Parts		
-50	NAS623-3-6	. . . SCREW (80205)	2	
-51	NAS623-3-8	. . . SCREW (80205)	2	
-52	AN960D10	. . . WASHER (88044)	4	
-53	MS21042L3	. . . NUT (96906)	4	
		——————✲——————		
	784622-103	. . . ANGLE INSTL, electronic compartment fuselage station 310	1	
	761578-503	. . RETAINER INSTL, electronic compartment cover *(see fig. 48)*	1	
	773719-501	. STIFFENER INSTL, fuselage station 315 bulkhead *(see fig. 30 for reqd)*	REF	
	773719-9	. . ZEE ASSY, bulkhead	1	
-54	769299-1	. . . FITTING, plumb line	1	
-55	775323-103	. BULKHEAD ASSY, liquid oxygen compartment *(see fig. 30 for reqd)*	REF	
	775323-105	. . BULKHEAD	1	
	775323-5	. . PLATE, seal	1	
	850129-101	. FAIRLEAD INSTL, ammunition compartment crossover conduit LH *(see fig. 30 for reqd)*	REF	
	850129-103	. FAIRLEAD INSTL, ammunition compartment crossover conduit RH *(see fig. 30 for reqd)*	REF	
-56	850127-101	. . FAIRLEAD ASSY, ammunition compartment LH crossover conduit	1	
-57	850128-101	. . FAIRLEAD ASSY, ammunition compartment RH crossover conduit	1	
	760163-145	. BULKHEAD INSTL, fuselage station 335 (LH only) *(see fig. 30 for reqd)*	REF	
	851245-101	. SWITCH INSTL, AIM-7N missile ground power test *(see fig. 30 for reqd)*	REF	
-58	851285-101	. . BRACKET, AIM-7N missile ground power test	1	
		Attaching Parts		
-59	NAS623-3-7	. . SCREW (80205)	1	
-60	NAS1056E6-025	. . SPACER (80205)	1	
-61	MS21042L3	. . NUT (96906)	1	
-62	MS24523-23	. . SWITCH, (S25) toggle (96906)	1	
-63	MS25224-1	. . GUARD (96906)	1	
-64	851283-101	. . DECAL	1	
		——————✲——————		
	760163-119	A. COVER INSTL, fuselage station 335 bulkhead *(see fig. 30 for reqd)*	REF	
-65	786279-1	A. . COVER ASSY, electric feed-thru ammunition compartment and auxiliary fuel tank	1	
-66	728407-1	A. . GASKET, electric feed-thru ammunition compartment and auxiliary fuel tank	1	
-67	786280-1	A. . COVER ASSY, forward electric feed-thru ammunition compartment and fuel tank	1	

Figura e particolare	NDR	1	2	3	4	5	6	7	DENOMINAZIONE	Quant.	Codice applicab.
39	NAS623-3-2	A.	.						SCREW (80205)	1	
	760163-115	A.							COVER INSTL, fuselage station 335 bulkhead *(see fig. 30 for reqd)*	REF	
-68	783783-1	A.	.						COVER ASSY, ammunition compartment and auxiliary fuel tank filler	1	
-69	783784-1	A.	.						GASKET, ammunition compartment and auxiliary fuel tank filler	1	
-70	783785-1	A.	.						COVER, ammunition compartment and auxiliary fuel tank filler	1	
	NAS623-3-2	A.	.						SCREW (80205)	2	
	760163-117	A.							COVER INSTL, fuselage station 335 bulkhead *(see fig. 30 for reqd)*	REF	
-71	787226-1	A.	.						COVER ASSY, ammunition compartment and auxiliary fuel tank vent	1	
-72	787225-1	A.	.						GASKET, ammunition compartment and auxiliary fuel tank vent	1	
-73	787224-1	A.	.						COVER ASSY, ammunition compartment and auxiliary fuel tank vent	1	
	NAS623-3-2	A.	.						SCREW (80205)	2	
	783501-501	A.							PARTITION INSTL, fuselage station 346 removable case stowage bay *(see fig. 30 for reqd)*	1	
	783501-9	A.	.						PARTITION ASSY, case stowage bay removable	1	
									Attaching Parts		
-74	NAS623-3-1	A.	.						SCREW (80205)	5	
-75	MS21042L3	A.	.						NUT (96806)	2	
-76	783501-11	A.	.	.					PARTITION, case stowage bay removable	1	
-77	CA2182-2	A.	.	.					RECEPTACLE, dummy (71468)	1	
									Attaching Parts		
	AN515-4R6	A.	.	.					SCREW (88044)	4	
	AN960-4	A.	.	.					WASHER (88044)	4	
	MS21042L04	A.	.	.					NUT (96906)	4	

A - Only for FB

Figura e particolare	NDR	DENOMINAZIONE	Quant.	Codice applicab.
		FUSELAGE STRUCTURE FUSELAGE STATION 358 TO 614		
40	849144-101	STRUCTURE ASSY, fuselage station 358 to 422 LH *(see fig. 31 for reqd)*	REF	
	849144-103	STRUCTURE ASSY, fuselage station 358 to 422 RH *(see fig. 31 for reqd)*	REF	
	769626-503	BEAM INSTL, rack recess center LH *(see fig. 44)*	1	
- 1	770123-17	DOOR, LH access *(see fig. 61)*	1	
	770123-18	DOOR, RH access *(see fig. 61)*	1	
	769662-1	SEGMENT INSTL, fuselage station 364 LH	1	
	769662-2	SEGMENT INSTL, fuselage station 364 RH	1	
- 2	769662-3	SEGMENT ASSY, fuselage station 364 LH *(see fig. 104)*	1	
	769662-4	SEGMENT ASSY, fuselage station 364 RH *(see fig. 104)*	1	
	769663-101	BULKHEAD INSTL, fuselage station 370 LH	1	
	769663-102	BULKHEAD INSTL, fuselage station 370 RH	1	
- 3	769663-103	SEGMENT ASSY, fuselage station 370 LH *(see fig. 104)*	1	
	769663-104	SEGMENT ASSY, fuselage station 370 RH *(see fig. 104)*	1	
	769664-101	SEGMENT INSTL, fuselage station 376 LH	1	
	769664-102	SEGMENT INSTL, fuselage station 376 RH	1	
- 4	769664-103	SEGMENT ASSY, fuselage station 376 LH *(see fig. 104)*	1	
	769664-104	SEGMENT ASSY, fuselage station 376 RH *(see fig. 104)*	1	
	769665-101	SEGMENT INSTL, fuselage station 382 LH	1	
	769665-102	SEGMENT INSTL, fuselage station 382 RH	1	
- 5	769665-103	SEGMENT ASSY, fuselage station 382 LH *(see fig. 104)*	1	
	769665-104	SEGMENT ASSY, fuselage station 382 RH *(see fig. 104)*	1	
	769666-101	BULKHEAD INSTL, fuselage station 388 LH	1	
	769666-102	BULKHEAD INSTL, fuselage station 388 RH	1	
- 6	769666-103	SEGMENT ASSY, fuselage station 388 LH *(see fig. 104)*	1	
	769666-104	SEGMENT ASSY, fuselage station 388 RH *(see fig. 104)*	1	
	769667-101	SEGMENT INSTL, fuselage station 394 LH	1	
	769667-102	SEGMENT INSTL, fuselage station 394 RH	1	
- 7	769667-103	SEGMENT ASSY, fuselage station 394 LH *(see fig. 104)*	1	
	769667-104	SEGMENT ASSY, fuselage station 394 RH *(see fig. 104)*	1	
- 8	850239-101	RING INSTL, fuselage station 400 LH	1	
	850239-102	RING INSTL, fuselage station 400 RH	1	
	769669-101	SEGMENT INSTL, fuselage station 406 LH	1	
	769669-102	SEGMENT INSTL, fuselage station 406 RH	1	
- 9	769669-103	SEGMENT ASSY, fuselage station 406 LH *(see fig. 104)*	1	
	769669-104	SEGMENT ASSY, fuselage station 406 RH *(see fig. 104)*	1	
	769670-101	SEGMENT INSTL, fuselage station 411 LH	1	
	769670-102	SEGMENT INSTL, fuselage station 411 RH	1	
-10	769670-103	SEGMENT ASSY, fuselage station 411 LH *(see fig. 104)*	1	
	769670-104	SEGMENT ASSY, fuselage station 411 RH *(see fig. 104)*	1	
	850238-101	SEGMENT INSTL, fuselage station 416 LH	1	
	850238-102	SEGMENT INSTL, fuselage station 416 RH	1	
-11	850238-103	SEGMENT ASSY, fuselage station 416 LH *(see fig. 104)*	1	
	850238-104	SEGMENT ASSY, fuselage station 416 RH *(see fig. 104)*	1	
	770111-501	LONGERON INSTL, lower fuselage station 358 to 422 rack recess LH *(see fig. 44)*	1	
	770111-502	LONGERON INSTL, lower fuselage station 358 to 422 rack recess RH *(see fig. 44)*	1	
	769933-501	DOOR INSTL, fuselage station 406 to 417 fuel pump access LH *(see fig. 61)*	1	
	769933-502	DOOR INSTL, fuselage station 406 to 417 fuel pump access RH *(see fig. 61)*	1	
	783412-101	LONGERON INSTL, fuselage station 358 to 444 upper left side	1	
	783412-102	LONGERON INSTL, fuselage station 358 to 444 upper right side	1	
-12	783412-103	LONGERON ASSY, fuselage station 358 to 444 upper LH *(see fig. 108)*	1	
	783412-104	LONGERON ASSY, fuselage station 358 to 444 upper RH *(see fig. 108)*	1	
	769580-1	TANK ATTACHMENT INSTL, LH 1/2 pan special stores fwd main fuel *(see fig. 104)*	1	
	769580-2	TANK ATTACHMENT INSTL, RH 1/2 pan special stores fwd main fuel *(see fig. 104)*	1	
	851062-103	LINER INSTL, forward main fuel tank LH	1	
	851062-105	LINER INSTL, forward main fuel tank RH	1	

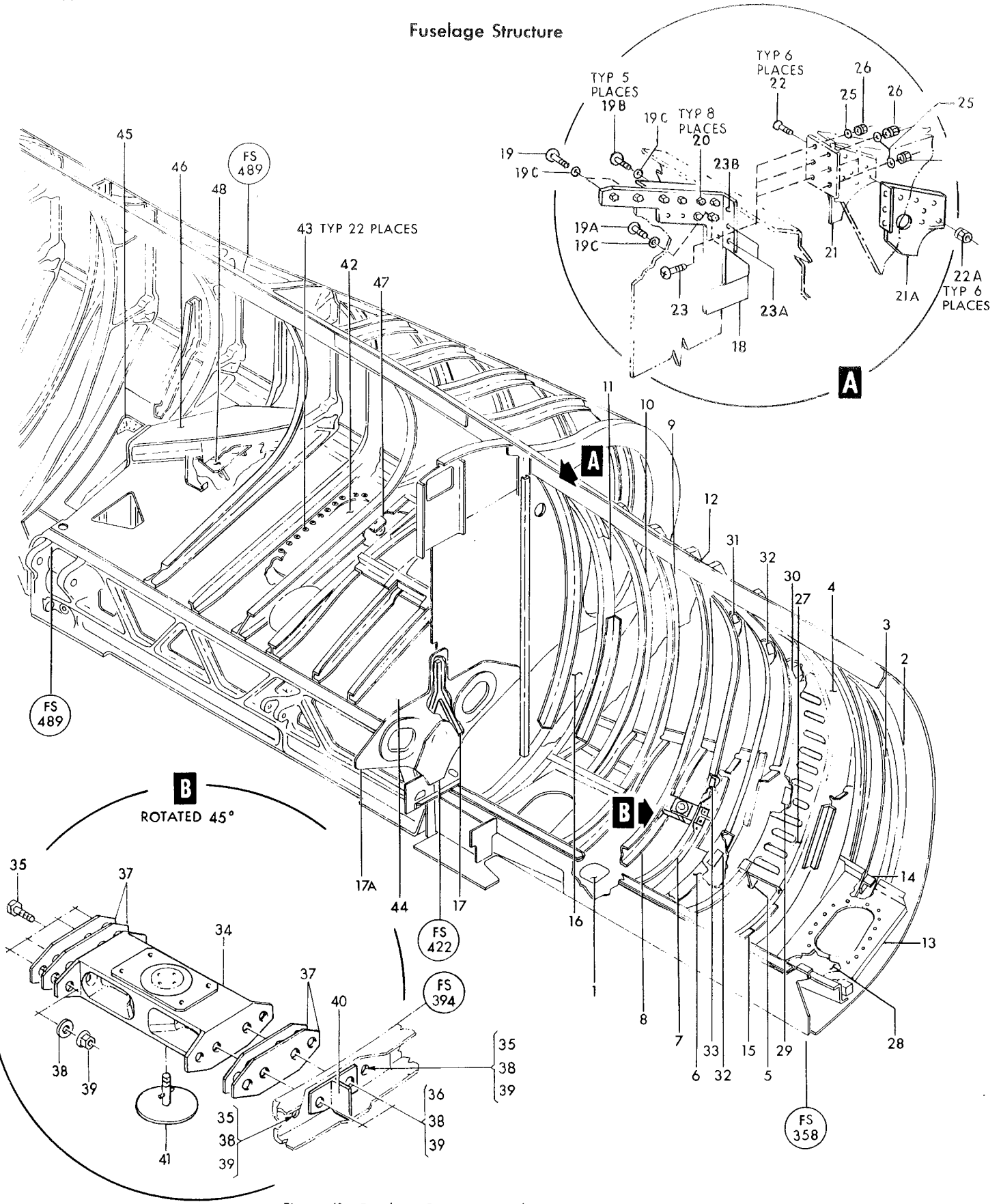

Figure 40—Fuselage Structure Fuselage Station 358 to 614

Figura e particolare	NDR	DENOMINAZIONE	Quant.	Codice applicab.
40-13	851181-101	PAN INSTL, left side forward fuel pump *(see fig. 104)*	1	
	851180-101	PAN INSTL, right side forward fuel pump *(see fig. 104)*	1	
-14	770801-1	SUPPORT, fuselage station 364 fuel tank liner LH	1	
	770801-2	SUPPORT, fuselage station 364 fuel tank liner RH	1	
-15	770889-1	SUPPORT, fuselage station 376 fuel tank liner LH	1	
	770889-2	SUPPORT, fuselage station 376 fuel tank liner RH	1	
	769787-103	BULKHEAD INSTL, half LH	1	
	769787-105	BULKHEAD INSTL, half RH	1	
-16	769787-107	BULKHEAD ASSY, half LH	1	
	769787-109	BULKHEAD ASSY, half RH	1	
	769580-29	TANK ATTACHMENT INSTL, fuselage station 422 special stores forward main fuel LH *(see fig. 104)*	1	
	769580-30	TANK ATTACHMENT INSTL, fuselage station 422 special stores forward main fuel RH *(see fig. 104)*	1	
	770870-1	WEB ASSY, fuselage station 422 fuel tank seal (LH only) *(see fig. 102 and 105)*	1	
	770870-5	WEB ASSY, fuel tank	1	
-17	762604	STIFFENER, fuselage station 422 fuel tank seal (Lockheed spec dwg)	1	
-17A	770870-3	WEB, fuselage station 422 fuel tank seal (Lockheed spec dwg)	1	
-18	850978-101	FITTING, inboard attachment LH	1	
	850978-102	FITTING, inboard attachment RH	1	
		Attaching Parts		
-19	NAS623-3-4	SCREW (80205)	2	
-19A	NAS623-3-5	SCREW (80205)	1	
-19B	NAS623-3-6	SCREW (80205)	5	
-19C	AN960-10L	WASHER (88044)	8	
-20	MS21042L3	NUT (96906)	8	
	850279-101	BRACKET INSTL, fuselage station 422 LH switch	1	6701-6765
	850279-107	BRACKET INSTL, fuselage station 422 LH switch	1	6766-6790
	850279-113	BRACKET INSTL, fuselage station 422 LH switch	1	6791-
	850279-102	BRACKET INSTL, fuselage station 422 RH switch	1	6701-6765
	850279-108	BRACKET INSTL, fuselage station 422 RH switch	1	6766-6790
	850279-114	BRACKET INSTL, fuselage station 422 RH switch	1	6791-
	850279-103	BRACKET ASSY, fuselage station 422 door switch	1	6701-6765
	850279-109	BRACKET ASSY, fuselage station 422 door switch	1	6766-6790
	850279-115	BRACKET ASSY, fuselage station 422 door switch	1	6791-
	769787-125	FITTING INSTL, bulkhead LH	1	
	769787-126	FITTING INSTL, bulkhead RH	1	
-21	783812-101	FITTING, fuselage station 422 outer LH	1	
	783812-102	FITTING, fuselage station 422 outer RH	1	
-21A	850977-101	FITTING, fuselage station 422 LH	1	
	850977-102	FITTING, fuselage station 422 RH	1	
		Attaching Parts		
-22	NAS623-4-5	SCREW (80205)	6	
-22A	MS21042L4	NUT (96906)	6	
-23	NAS623-3-9	SCREW (80205)	3	
-23A	NAS623-3-11	SCREW (80205)	2	
-23B	NAS1203-11	SCREW (80205)	1	
-25	727532-1	WASHER	6	
-26	MS21042L3	NUT (96906)	6	
-27	760075-49	DOOR, bleed air duct service *(see fig. 51)*	1	
		Attaching Parts		
	NAS1203-2	SCREW (80205)	10	
	770575-101	DUCT INSTL, BLC bleed air outlet LH *(see fig. 51)*	1	
	770575-102	DUCT INSTL, BLC bleed air outlet RH *(see fig. 51)*	1	
	769932-109	DOOR INSTL, fuselage station 358 to 370 fuel pump access LH *(see fig. 61)*	1	
	769932-110	DOOR INSTL, fuselage station 358 to 370 fuel pump access RH *(see fig. 61)*	1	

Figura e particolare	NDR	DENOMINAZIONE (1 2 3 4 5 6 7)	Quant.	Codice applicab.
40-28	770386-1	SUPPORT ASSY, left side forward fuel pump *(see fig. 44)*	1	
	770318-1	SUPPORT ASSY, right side forward fuel pump *(see fig. 44)*	1	
	760731-57L	FITTING INSTL, bulkhead LH	1	
	760731-57R	FITTING INSTL, bulkhead RH	1	
	761337-3L	FITTING, scoop attachment LH	1	
-29	761337-3R	FITTING, scoop attachment RH	1	
-30	761337-4L	FITTING, scoop attachment LH	1	
	761337-4R	FITTING, scoop attachment RH	1	
	760732-59L	FITTING INSTL, bulkhead LH	1	
	760732-59R	FITTING INSTL, bulkhead RH	1	
-31	761337-5L	FITTING, scoop attachment LH	1	
	761337-5R	FITTING, scoop attachment RH	1	
-32	761337-6L	FITTING, scoop attachment LH	2	
	761337-6R	FITTING, scoop attachment RH	2	
-33	761337-7L	FITTING, scoop attachment LH	1	
	761337-7R	FITTING, scoop attachment RH	1	
	799302-101	FITTING INSTL, fus sta 396 pylon attach LH	1	
	799302-102	FITTING INSTL, fus sta 396 pylon attach RH	1	
-34	799315-101	FITTING, fus sta 396 pylon attach	1	
		Attaching Parts		
-35	NAS1104-9	BOLT (80205)	6	
-36	NAS1104-10	BOLT (80205)	2	
-37	799303-101	SHIM, fus sta 396 pylon attach fitting	4	
-38	AN960-416	WASHER (88044)	8	
-39	MS21042L4	NUT (96906)	8	
		*		
-40	850161-101	TEE, fus sta 394 overturn channel LH	1	
	850161-102	TEE, fus sta 394 overturn channel RH	1	
-41	799385-101	COVER ASSY, fus sta 396 pylon attach hole *(see fig. 61)*	1	
	760290-101	FLOOR INSTL, fuselage station 422 to 489 LH *(see fig. 31 for reqd)*	REF	
	760290-506	FLOOR INSTL, fuselage station 422 to 489 RH *(see fig. 31 for reqd)*	REF	
	764136-101	SUPPORT INSTL, firewall fuel shutoff valve control linkage (LH only) *(see fig. 112)*	1	
-42	760290-13	PLATE, fuselage station 422 to 489 floor	1	
		Attaching Parts		
-43	NAS623-3-2	SCREW (80205)	22	
		*		
-44	760290-21	WEB ASSY, fuselage station 422 to 489 floor LH	1	
	760290-22	WEB ASSY, fuselage station 422 to 489 floor RH	1	
	764361-11	TANK ATTACHMENT INSTL, main aft fuel LH *(see fig. 108)*	1	
	764361-12	TANK ATTACHMENT INSTL, main aft fuel RH *(see fig. 108)*	1	
-45	783458-1	FITTING, fuselage station 481 to 489 support LH	1	
	783458-2	FITTING, fuselage station 481 to 489 support RH	1	
-46	785393-1	BEAM, main landing gear liquid spring support LH	1	
	785393-2	BEAM, main landing gear liquid spring support RH	1	
	761060-4	SHIM, laminated	1	
	794527-7	BRACKET ASSY, main landing gear forward door LH *(see fig. 241)*	1	
	794527-8	BRACKET ASSY, main landing gear forward door RH *(see fig. 241)*	1	
-47	763955	STOP ASSY, main landing gear forward door *(see fig. 239)*	1	
		Attaching Parts		
	AN4-12A	BOLT (88044)	4	
	AN960D416	WASHER (88044)	4	
		*		
	760290-27	FITTING INSTL, fuselage station 422 to 489 LH *(see fig. 31 for reqd)*	REF	
	760290-28	FITTING INSTL, fuselage station 422 to 489 RH *(see fig. 31 for reqd)*	REF	
-48	760980-501	FITTING ASSY, liquid spring support LH *(see fig. 237)*	1	
	760980-502	FITTING ASSY, liquid spring support RH *(see fig. 237)*	1	

Figura e particolare	NDR	DENOMINAZIONE 1 2 3 4 5 6 7	Quant.	Codice applicab.
		FUSELAGE STRUCTURE FUSELAGE STATION 358 TO 614 (CONTINUED)		
41	761467-31	. ANGLE INSTL, fuselage station 422 to 555 LH *(see fig. 31 for reqd)*	REF	
	761467-32	. ANGLE INSTL, fuselage station 422 to 555 RH *(see fig. 31 for reqd)*	REF	
- 1	761467-6R	. . ANGLE RH	1	
	761467-6L	. . ANGLE LH	1	
- 2	761467-7R	. . ANGLE RH	1	
	761467-7L	. . ANGLE LH	1	
- 3	761467-51	. . ANGLE RH	1	
	761467-9L	. . ANGLE LH	1	
- 4	761467-10R	. . ANGLE RH	1	
	761467-10L	. . ANGLE LH	1	
- 5	761467-14R	. . ANGLE RH	1	
	761467-14L	. . ANGLE LH	1	
- 6	761467-15R	. . ANGLE RH	1	
	761467-15L	. . ANGLE LH	1	
	761467-101	. WING MATING PLANE INSTL, fuselage station 422 to 555 LH *(see fig. 31 for reqd)*	REF	
	761467-102	. WING MATING PLANE INSTL, fuselage station 422 to 555 RH *(see fig. 31 for reqd)*	REF	
- 7	766143-1	. . NAMEPLATE, torque actuator mounting bolt	1	
	761467-103	. . WEB ASSY, fuselage station 422 to 555 wing mating plane LH	1	
- 8	761467-104	. . WEB ASSY, fuselage station 422 to 555 wing mating plane RH	1	
	774206-9	. . . LACING ATTACHMENT INSTL, aft main fuel tank LH *(see fig. 107)*	1	
	774206-10	. . . LACING ATTACHMENT INSTL, aft main fuel tank RH *(see fig. 107)*	1	
- 9	784215-3	. . SUPPORT INSTL, roll rate gyro electronic equipment (RH only) *(see fig. 186)*	1	
	760490-501	. WEB INSTL, fuselage station 437 to 457 canted LH *(see fig. 31 for reqd)*	REF	
	760490-502	. WEB INSTL, fuselage station 437 to 457 canted RH *(see fig. 31 for reqd)*	REF	
	760490-11	. . WEB ASSY, fuselage station 437 to 457 canted LH	1	
-10	760490-12	. . WEB ASSY, fuselage station 437 to 457 canted RH	1	
	798976-101	. . . NAMEPLATE, wing attaching instructions LH	1	
-11	798976-103	. . . NAMEPLATE ,wing attaching instructions RH	1	

Fuselage Structure

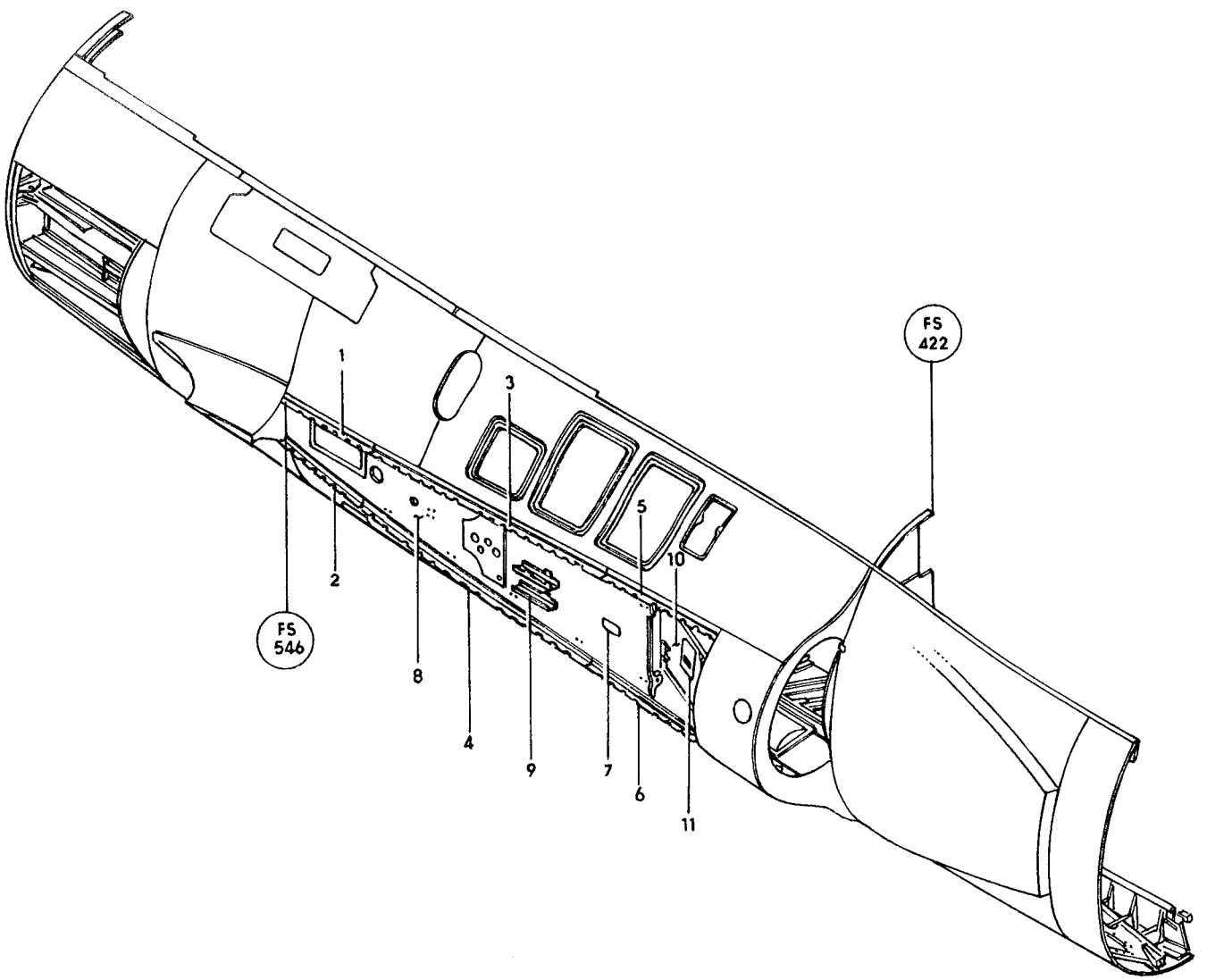

Figure 41 — Fuselage Structure Fuselage Station 358 to 614 (Continued)

Figura e particolare	NDR	DENOMINAZIONE 1 2 3 4 5 6 7	Quant.	Codice applicab.
		FUSELAGE STRUCTURE FUSELAGE STATION 489 TO 614		
42	783224-107	SIDE PANEL INSTL, fus sta 489 to 614 lower LH *(see fig. 31 for reqd)*	REF	
	783224-108	SIDE PANEL INSTL, fus sta 489 to 614 lower RH *(see fig. 31 for reqd)*	REF	
- 1	783091-101	LONGERON, fus sta 489 to 520 lower	1	
	783091-102	LONGERON, fus sta 489 to 520 lower	1	
		Attaching Parts		
- 2	MS20007-16	BOLT (96906)	1	
- 3	MS20007-14	BOLT (96906)	1	
- 4	MS20007-12	BOLT (96906)	1	
- 5	NAS1106-11D	BOLT (80205)	6	
- 6	MS20006-14	BOLT (96906)	2	
- 7	MS20002C7	WASHER (96906)	3	
- 8	MS20002-7	WASHER (96906)	3	
- 9	AN960-616L	WASHER (88044)	6	
-10	MS20002C6	WASHER (96906)	2	
-11	MS20002-6	WASHER (96906)	2	
-12	EB070	NUT, self-locking double hexagon high tension (72962)	3	
-13	NAS679C6	NUT (80205)	6	
-14	EB064	NUT, self-locking double hexagon high tension (72962)	2	
-15	783463-109	LONGERON ASSY, fus sta 520 to 614 lower	1	
	783463-110	LONGERON ASSY, fus sta 520 to 614 lower	1	
-16	783172-501	FITTING ASSY, fus sta 614 longeron LH *(see fig. 45)*	1	
	783172-502	FITTING ASSY, fus sta 614 longeron RH *(see fig. 45)*	1	
		Attaching Parts		
-17	MS20005-10	BOLT (96906) (1 reqd LH and 2 reqd RH)	AR	
-18	MS20005-12	BOLT LH (96906)	1	
-19	MS20006-10	BOLT (96906)	1	
-20	MS20006-12	BOLT (96906)	3	
-21	MS20002C5	WASHER (96906)	2	
-22	MS20002C6	WASHER (96906)	4	
-23	MS20002-5	WASHER (96906)	3	
-24	MS20002-6	WASHER (96906)	4	
-25	A29185-2	NUT (56878)	2	
-26	A29185-3	NUT (56878)	4	
	783226-501	LONGERON INSTL, fus sta 444 to 614 upper LH *(see fig. 31 for reqd)*	REF	
	783226-503	LONGERON INSTL, fus sta 444 to 614 upper RH *(see fig. 31 for reqd)*	REF	
-27	783226-29	LONGERON ASSY, fus sta 444 to 614 upper LH	1	
	783226-31	LONGERON ASSY, fus sta 444 to 614 upper RH	1	
-28	783086-1	FITTING ASSY, fus sta 614 upper longeron LH *(see fig. 45)*	1	
	783086-2	FITTING ASSY, fus sta 614 upper longeron RH *(see fig. 45)*	1	
		Attaching Parts		
-29	MS20006-8	BOLT (96906)	2	
-30	MS20006-10	BOLT (96906)	3	
-31	MS20006-12	BOLT (96906)	2	
-32	MS20002C6	WASHER (96906)	7	
-33	MS20002-6	WASHER (96906)	7	
-34	NAS679C6	NUT (80205)	7	
	786456-101	PANEL INSTL, fus sta 579 to 614 bottom *(see fig. 31 for reqd)*	REF	
-35	786456-103	PANEL ASSY, fus sta 579 to 614 bottom	1	
-36	786456-7	COVER ASSY, fus sta 579 to 614 bottom	1	
		Attaching Parts		
-37	AN520-10R10	SCREW (88044)	23	
-38	NAS1203-2	SCREW (80205)	2	
-39	MS21042L3	NUT (96906)	12	
-40	786558-1	COVER, drag chute mechanism	1	
-41	786559-1	GASKET, drag chute mechanism	1	

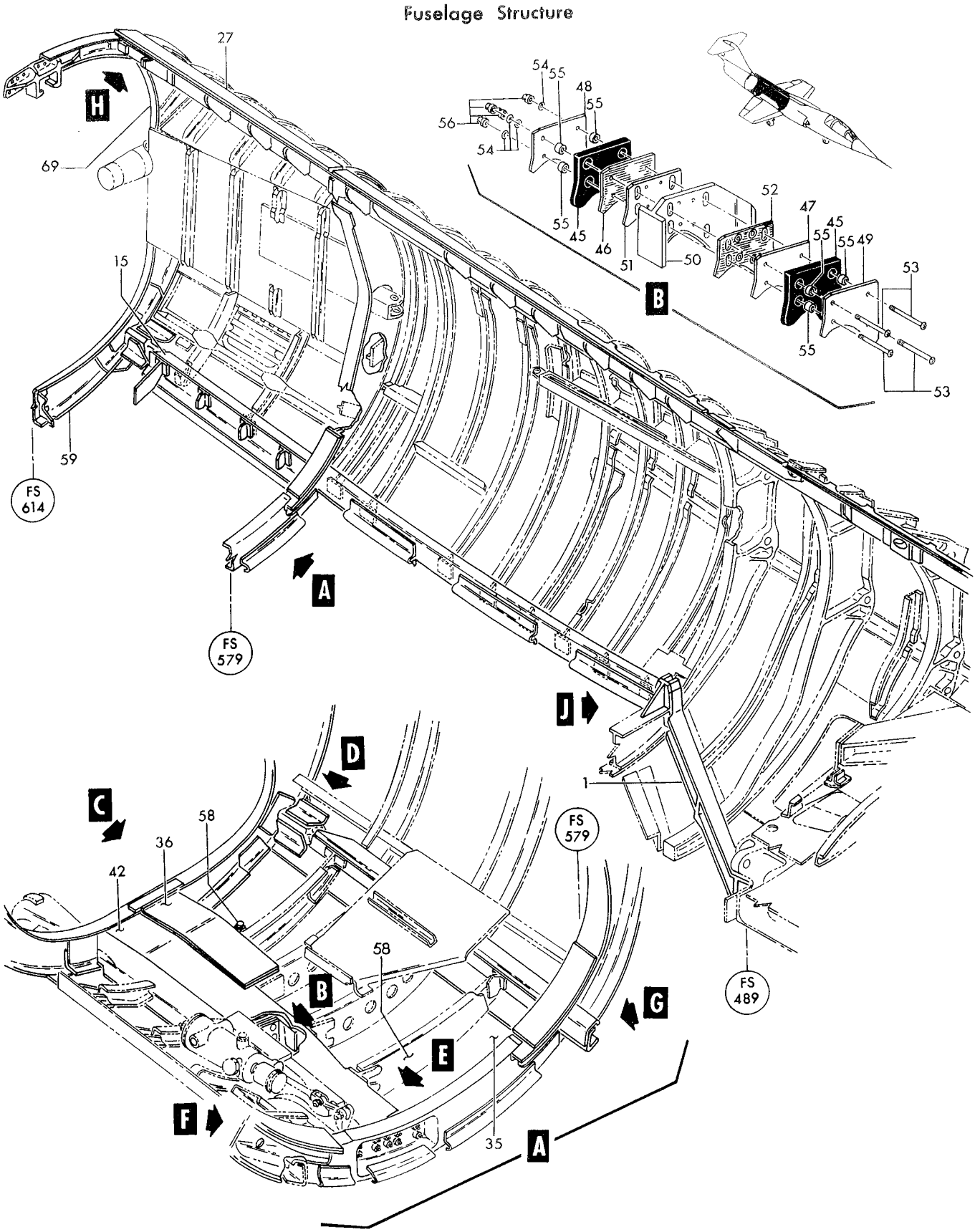

Figure 42 — Fuselage Structure Fuselage Station 489 to 614 (Sheet 1 of 2)

Fuselage Structure

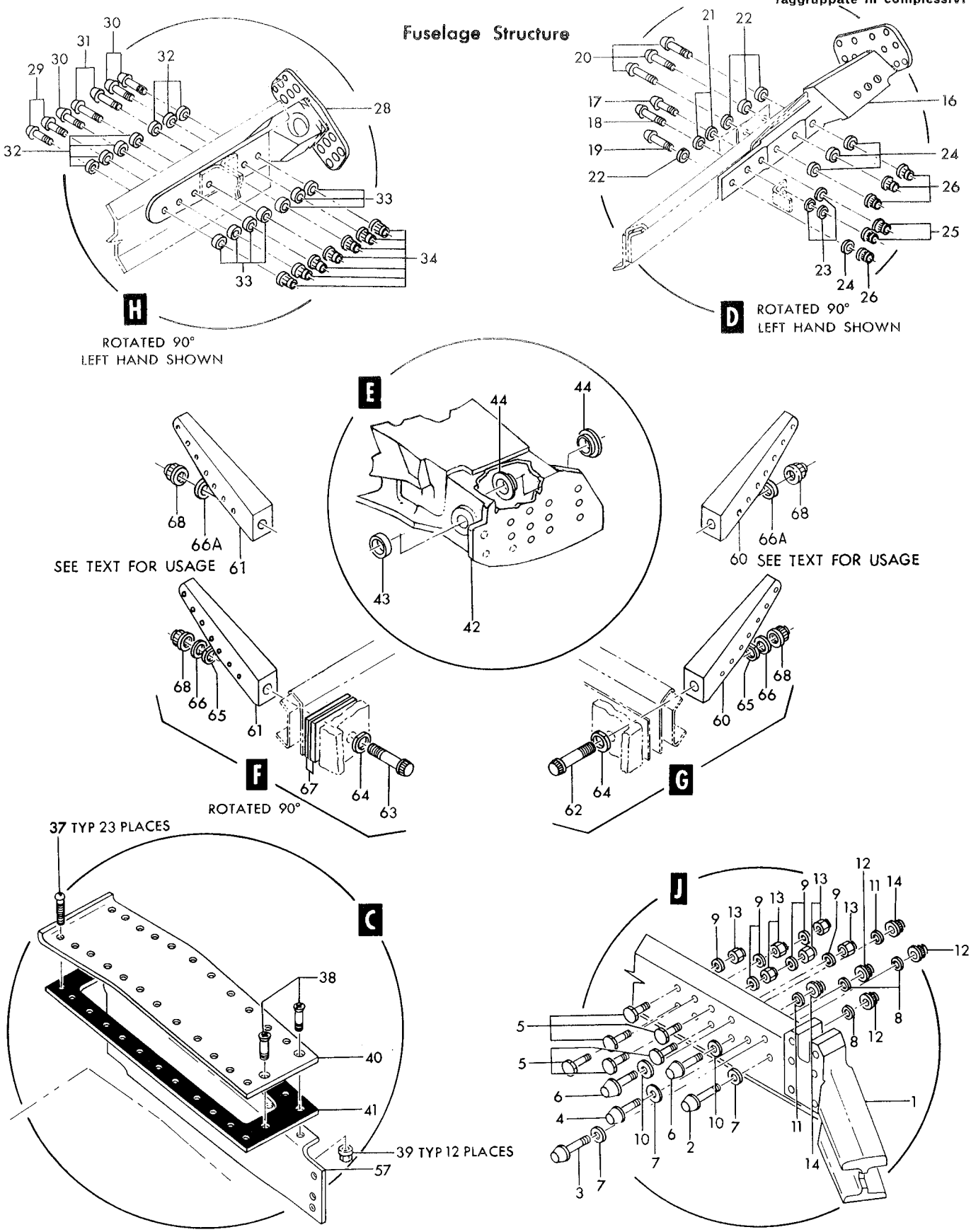

Figure 42 — Fuselage Structure Fuselage Station 489 to 614 (Sheet 2 of 2)

Figura e particolare	NDR	1	2	3	4	5	6	7	DENOMINAZIONE	Quant.	Codice applicab.
42	786925-1								DOOR INSTL, arresting hook pivot shaft access *(see fig. 61)*	1	
	786560-101								SUPPORT INSTL, fus sta 579 to 614 arresting hook	1	
-42	786376-101								SUPPORT ASSY, arresting hook	1	
-43	728405-1								BUSHING, arresting hook	1	
-44	728406-1								BUSHING, arresting hook flanged	2	
	786955-1								BUMPER ASSY, arresting hook	1	
-45	786954-1								BUMPER, arresting hook rubber	2	
-46	786952-1								PLATE, arresting hook bumper outer serrated	1	
-47	786952-2								PLATE, arresting hook bumper outer serrated	1	
-48	786953-1								PLATE, arresting hook bumper retaining	1	
-49	786953-2								PLATE, arresting hook bumper retaining	1	
-50	786955-3								FITTING ASSY, arresting hook	1	
	786704-1								FITTING, arresting hook bumper	1	
-51	786951-1								PLATE, arresting hook bumper inner serrated	1	
-52	786952-1								PLATE, arresting hook bumper inner serrated	1	
-53	NAS623-3-28								SCREW (80205)	4	
-54	AN960-10								WASHER (88044)	4	
-55	NAS43DD4-30								SPACER (80205)	8	
-56	MS21042L3								NUT (96906)	4	
-57	786557-1								SUPPORT ASSY, drag chute mechanism	1	
-58	784267-501								FITTING INSTL, engine compartment *(see fig. 246)*	2	
	786600-117								PANEL INSTL, fus sta 614 fwd section bottom	1	
-59	786600-13								PANEL ASSY, fus sta 614 fwd section bottom *(see fig. 256)*	1	
	786459-7								SPLICE INSTL, fus sta 579 lower *(see fig. 31 for reqd)*	REF	
-60	786435-1								BRACKET, fus sta 579 lower LH	1	
-61	786435-2								BRACKET, fus sta 579 lower RH	1	
									Attaching Parts		
	NAS623-3-7								SCREW (80205)	7	
	AN960-10L								WASHER (88044)	7	
	MS21042L3								NUT (96906)	7	
-62	NAS628-20								BOLT (80205)	1	
-63	NAS628-22								BOLT (80205)	1	
-64	728512-1								WASHER, fus sta 579 lower bracket	2	
-65	728513-1	A.							WASHER	2	6701-6765
-66	MS20002-8	A.							WASHER (96906)	2	6701-6765
-66A	852852-101	B.							WASHER, fus sta 579 frame	1	
-67	786585-1								SHIM, fus sta 579 lower bracket	AR	
-68	EB080								NUT, self-locking double hexagon high tension (72962)	2	
	798262-105								ATTACHMENT INSTL, fus sta 489 bulkhead roller bracket LH *(see fig. 31 for reqd)*	REF	
	798262-106								ATTACHMENT INSTL, fus sta 489 bulkhead roller bracket RH *(see fig. 31 for reqd)*	REF	
	786600-101								BULKHEAD INST, fus sta 614 fwd section LH *(see fig. 31 for reqd)*	REF	
	786600-103								BULKHEAD INSTL, fus sta 614 fwd section RH *(see fig. 31 for reqd)*	REF	
-69	786600-105								BULKHEAD ASSY, fus sta 614 fwd section LH *(see fig. 43 and 251)*	1	
	786600-107								BULKHEAD ASSY, fus sta 614 fwd section RH *(see fig. 43)*	1	
	786600-109								WEB ASSY, LH	1	
	786600-111								WEB ASSY, RH	1	
	767561-1								TAB INSTL, fus sta 614 rudder cable LH *(see fig. 67)*	1	
	851954-101								TAB INSTL, fus sta 614 rudder cable RH *(see fig. 67)*	1	6701-6800
	767561-2								TAB INSTL, fus sta 614 rudder cable RH *(see fig. 67)*	1	6801-

A - Removed per AA.1F-104S-OT-158
B - Reqd per AA.1F-104S-OT-158

Figura e particolare	NDR	1 2 3 4 5 6 7	DENOMINAZIONE	Quant.	Codice applicab.
			FUSELAGE STRUCTURE FUSELAGE STATION 614 AFT		
43	851417-101		TAIL CONE INSTL *(see fig. 32 for reqd)*	REF	
-1	851417-103		TAIL CONE ASSY	1	
-2	769170-105		STRUCTURE ASSY, aft fuselage	1	
-3	851409-101		DOOR, drain access	1	
			Attaching Parts		
	NAS560HK3-0		SCREW (80205)	12	
			*		
-4	760224-11		SKIN, aft section	1	
-5	760224-55		BULKHEAD, aft section LH	1	
	760224-56		BULKHEAD, aft section RH	1	
-6	760224-57		BULKHEAD, aft section LH	1	
	760224-58		BULKHEAD, aft section RH	1	
-7	MS27253C1		NAMEPLATE (96906)	1	
-8	762580		RING, aft cone	1	
-9	763081		SPACER, tail cone	2	
-10	784121-101		PAN INSTL, rudder quadrant drain	1	
-10A	784122-101		PAN ASSY, rudder quadrant drain	1	
			Attaching Parts		
-11	NAS623-3-1		SCREW (80205)	20	
-11A	NAS623-3-1	A.	SCREW (80205)	5	6701-6740
	NAS1103-1	B.	BOLT (80205)	5	
-12	NAS623-3-2		SCREW (80205)	8	
-13	NAS517-3-1		SCREW (80205)	2	
			*		
	784750-1		SHEAR PIN INSTL, aft fuselage section *(see fig. 32 for reqd)*	REF	
-14	761640		FITTING, shear pin	6	
			Attaching Parts		
-15	R3106T6-3		LOCKBOLT (29666)	2	
-16	R3805R6C		COLLAR (29666)	2	
			*		
	786600-105		BULKHEAD ASSY, fuselage station 614 forward section LH *(see fig. 42 for reqd)*	REF	
	786600-107		BULKHEAD ASSY, fuselage station 614 forward section RH *(see fig. 42 for reqd)*	REF	
-16A	760979		BUSHING, fuselage station 614 bulkhead installation	3	
	783502-1		LONGERON INSTL, fuselage station 614 to 639 upper LH *(see fig. 32 for reqd)*	REF	
	783502-2		LONGERON INSTL, fuselage station 614 to 639 upper RH *(see fig. 32 for reqd)*	REF	
	783502-7		LONGERON ASSY, upper LH	1	
	783502-8		LONGERON ASSY, upper RH	1	
-17	783017-1		FITTING, fuselage station 614 aft upper longeron *(see fig. 45)*	1	
			Attaching Parts		
-18	NAS1204-3		SCREW (80205)	4	
-19	HL50-8-5		PIN (73197)	16	
-20	HL50-10-4		PIN (73197)	2	
-21	HL90-8A		COLLAR (73197)	16	
-22	HL90-10A		COLLAR (73197)	2	
-23	MS21042L4		NUT (96906)	4	
			*		
	783805-1		LONGERON INSTL, fuselage station 614 to 685 lower LH *(see fig. 32 for reqd)*	REF	
	783805-3		LONGERON INSTL, fuselage station 614 to 685 lower RH *(see fig. 32 for reqd)*	REF	
	783805-15		LONGERON ASSY, lower LH	1	
	783805-16		LONGERON ASSY, lower RH	1	
-24	784311-1		FITTING ASSY, lower longeron LH *(see fig. 45)*	1	
-25	784311-2		FITTING ASSY, lower longeron RH *(see fig. 45)*	1	
			Attaching Parts		
-26	NAS1204-4		SCREW (80205)	4	
-27	MS20006-8		BOLT (96906)	2	
-28	MS20006-6		BOLT (96906)	3	
-29	MS20002-6		WASHER (under nut) (96906)	3	
-30	MS20002C6		WASHER (under bolt head) (96906)	5	
-31	AN960-416		WASHER (88044)	4	

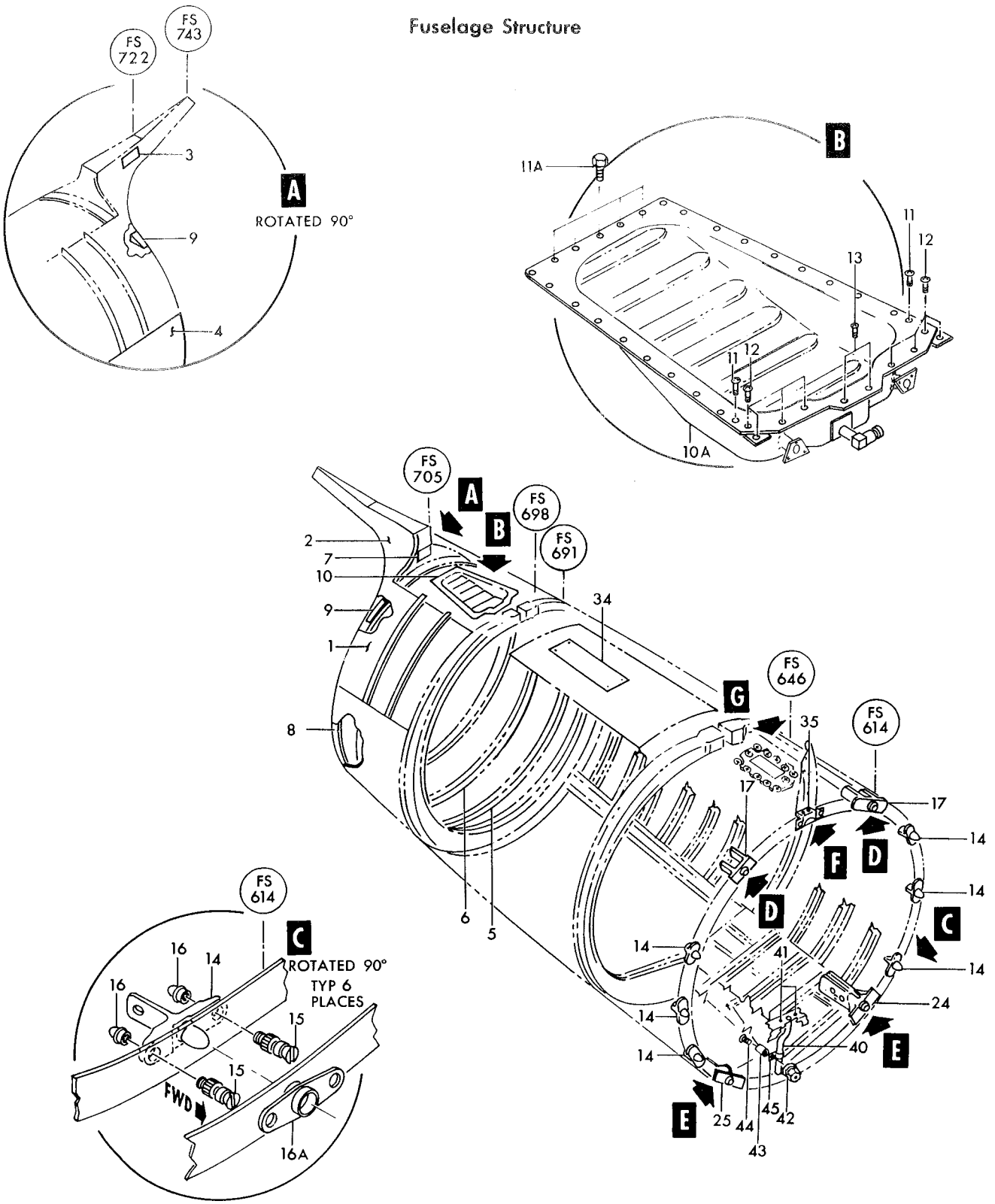

Figure 43—Fuselage Structure Fuselage Station 614 Aft (Sheet 1 of 2)

Fuselage Structure

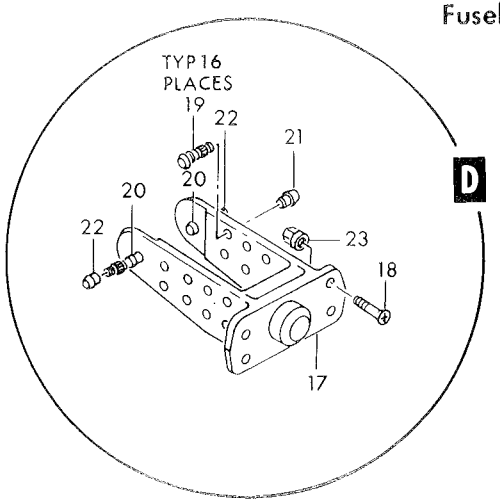

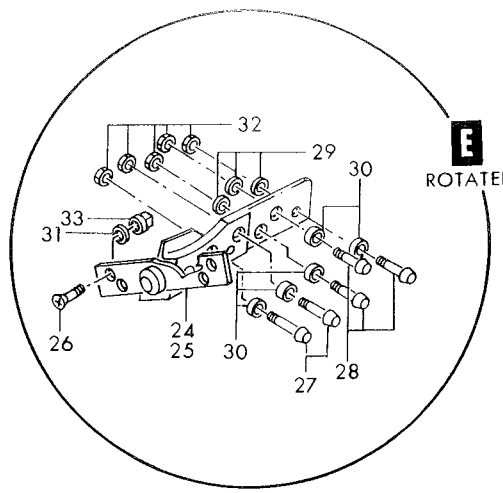

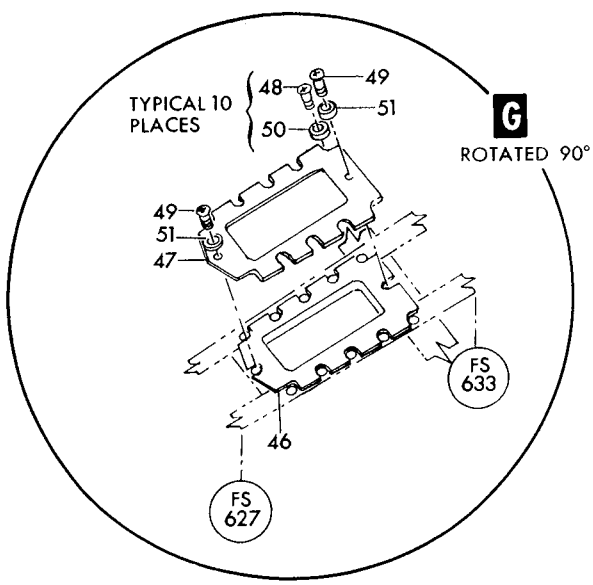

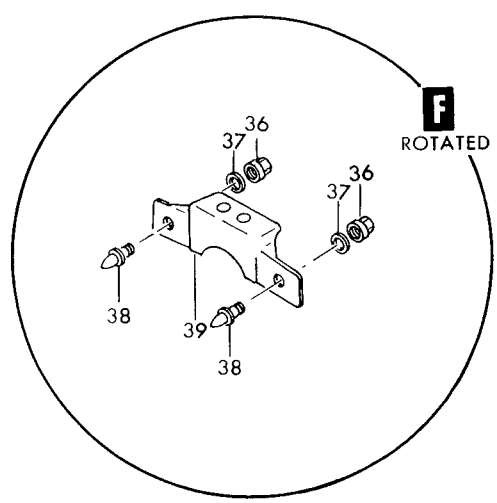

Figure 43—Fuselage Structure Fuselage Station 614 Aft (Sheet 2 of 2)

Figura e particolare	NDR	1 2 3 4 5 6 7 DENOMINAZIONE	Quant.	Codice applicab.
43-32	A29185-3	NUT (56878)	5	
-33	MS21042L4	NUT (96906)	4	
	785078-1	NAMEPLATE INSTL, empennage attaching instructions *(see fig. 32 for reqd)*	REF	
-34	785077-1	NAMEPLATE, empennage attaching instructions	1	
-35	784134-1	FITTING ASSY, dorsal attachment *(see fig. 32 for reqd)*	REF	
-36	MS21042L7	NUT (96906)	2	
-37	AN960-716	WASHER (88044)	2	
-38	727763-1	PIN, dorsal shear	2	
-39	784134-3	FITTING, dorsal attachment	1	
	773662-1	SCUPPER INSTL, fuselage station 614 aft fuel drain *(see fig. 32 for reqd)*	REF	
-40	773663-1	SCUPPER ASSY, fuel drain	1	
		Attaching Parts		
-41	AN502-10-6	SCREW (88044)	2	
-42	MS21042L3	NUT (96906)	1	
-43	NAS43DD3-26	SPACER (80205)	1	
-44	AN515-8R12	SCREW (88044)	1	
-45	TA529TD6	CLAMP, loop type support (84971)	1	
	789441-1	GASKET INSTL, stabilizer servo input linkage *(see fig. 32 for reqd)*	REF	
-46	762784	GASKET, stabilizer servo input linkage seal	1	
-47	762857	DOUBLER, stabilizer servo input linkage seal	1	
		Attaching Parts		
-48	NAS517-3-5	SCREW (80205)	10	
-49	NAS623-3-6	SCREW (80205)	2	
-50	LS2816-4	WASHER, countersunk (36659)	10	
-51	LS881-6	WASHER, plain (36659)	2	

A - Removed per AA.1F-104S-OT-105
B - Reqd per AA.1F-104S-OT-105

Figura e particolare	NDR	DENOMINAZIONE 1 2 3 4 5 6 7	Quant.	Codice applicab.
		EXTERNAL STORES RACK RECESS AND SUPPORTS FUSELAGE STATION 358 TO 422		
44	769335-101	. RING INSTL, fuselage station 358 *(see fig. 31 for reqd)*	REF	
	769335-119	. . RING ASSY, fuselage station 358 aft	1	
	769580-107	. . . ATTACHMENT INSTL, main fuel special stores *(see fig. 104)*	1	
- 1	NAS1203-11	. . SCREW (80205)	2	
- 2	MS21042L3	. . NUT (96906)	2	
	769335-103	. BULKHEAD INSTL, fuselage station 358 forward LH *(see fig. 30 for reqd)*	REF	
	769335-105	. BULKHEAD INSTL, fuselage station 358 forward RH *(see fig. 30 for reqd)*	REF	6701-6765
	769335-139	. BULKHEAD INSTL, fuselage station 358 forward RH *(see fig. 30 for reqd)*	REF	6766-
- 3	842047-101	. . LATCH, ejector rack fitting (LH only)	1	
		Attaching Parts		
- 4	AN3H4A	. . BOLT (88044) (LH only)	2	
- 5	AN960D10	. . WASHER (88044) (LH only)	2	
- 6	786211-1	. . CLIP, ejector rack fitting (LH only)	1	
	769335-113	. . BULKHEAD ASSY, fuselage station 358 forward LH *(see fig. 101)*	1	
	769335-115	. . BULKHEAD ASSY, fuselage station 358 forward RH *(see fig. 101)*	1	6701-6765
	769335-141	. . BULKHEAD ASSY, fuselage station 358 forward RH *(see fig. 101)*	1	6766-
- 7	852046-101	. . . BUSHING, bomb rack latch (RH only)	2	
	769335-107	. BEAM INSTL, fuselage station 358 (NHA 849138-101)	1	
	769335-111	. . BEAM ASSY, fuselage station 358 LH	1	
	769335-112	. . BEAM ASSY, fuselage station 358 RH	1	
-18	850155-101	. . . BEAM ASSY, rack recess LH	1	
-19	850155-102	. . . BEAM ASSY, rack recess RH	1	
		Attaching Parts		
-20	NAS623-3-4	. . . SCREW (80205)	6	
-21	NAS623-3-5	. . . SCREW (80205)	11	
-24	NAS623-4-7	. . . SCREW (80205)	9	
-24A	AN960-10L	. . . WASHER (88044)	6	
-25	MS21042L4	. . . NUT (96906)	9	
-26	MS21042L3	. . . NUT (96906)	17	
-27	769520-1	. . . FITTING, upper longeron tie LH	1	
-28	769520-2	. . . FITTING, upper longeron tie RH	1	
		Attaching Parts		
-29	NAS1106-16D	. . . BOLT (80205)	1	
-30	AN960D616	. . . WASHER (88044)	1	
-31	AN320-6	. . . NUT (88044)	1	
	MS24665-283	. . . COTTER PIN (96906)	1	
	766215-19	. FITTING INSTL, fuselage station 358 to 444 LH *(see fig. 31 for reqd)*	REF	
	766215-20	. FITTING INSTL, fuselage station 358 to 444 RH *(see fig. 31 for reqd)*	REF	
-32	769756-1	. . FITTING, longeron upper fuselage station 358 LH	1	
-32A	769756-2	. . FITTING, longeron upper fuselage station 358 RH	1	
		Attaching Parts		
-33	NAS1104-10	. . BOLT (80205)	7	
-34	NAS1204-10	. . SCREW (80205)	1	
-35	AN960D416	. . WASHER (88044)	8	
-36	766501-1	. . SHIM, upper longeron fuselage station 358	1	
-37	MS21042L4	. . NUT (96906)	8	
	769626-13	. SEAL INSTL, rack recess *(see fig. 31 for reqd)*	REF	
-50	769626-23	. . SEAL, rack recess	2	
	770111-501	. LONGERON INSTL, fuselage station 358 to 422 lower rack recess LH *(see fig. 40 for reqd)*	REF	
	770111-502	. LONGERON INSTL, fuselage station 358 to 422 lower rack recess RH *(see fig. 40 for reqd)*	REF	
-51	766352-37	. . SHIM, tapered	1	
-52	770111-7	. . SEAL, rack recess	1	

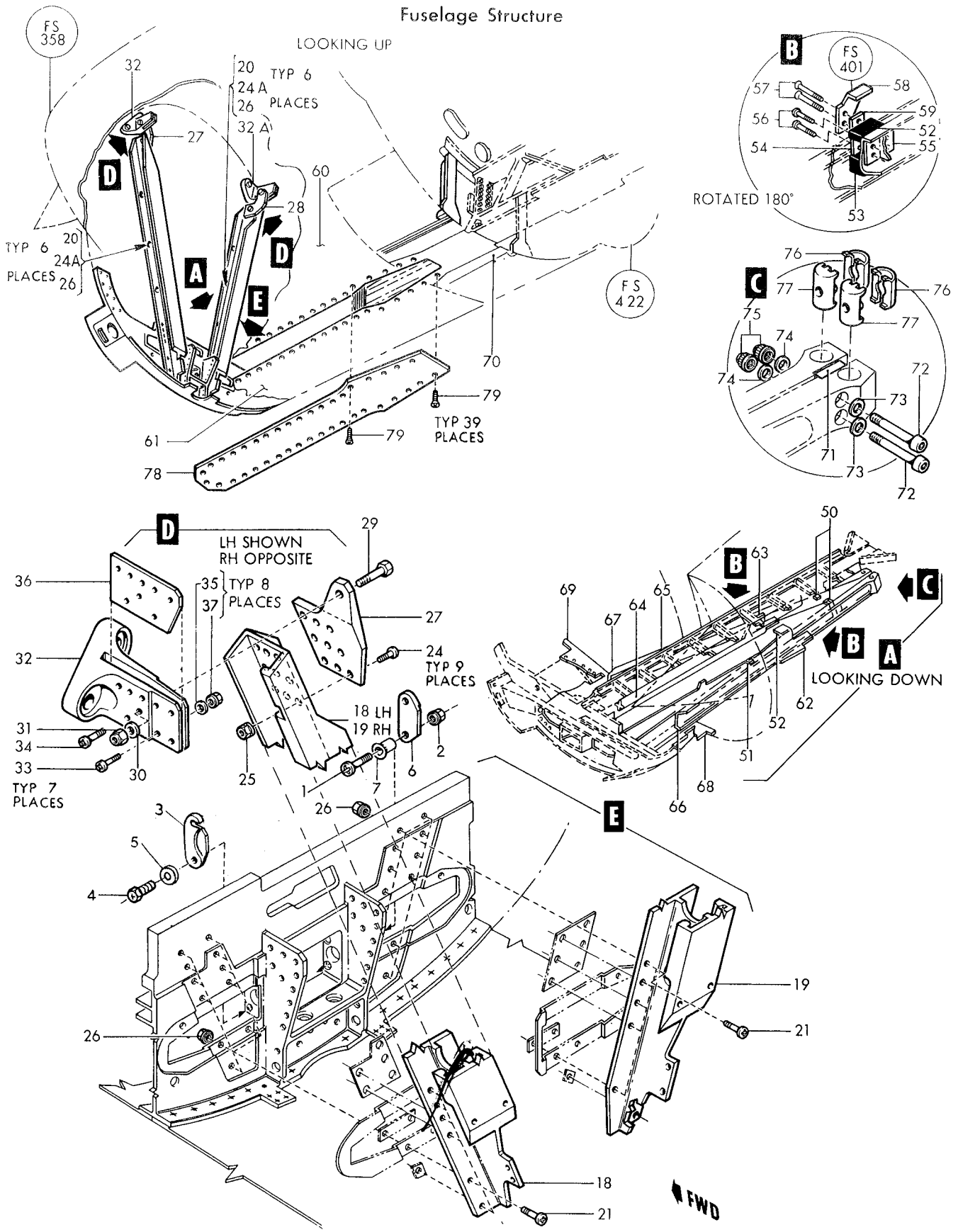

Figure 44–External Stores Rack Recess and Supports Fuselage Station 358 to 422

Figura e particolare	NDR	DENOMINAZIONE 1 2 3 4 5 6 7	Quant.	Codice applicab.
44-53	770111-9	SEAL, rack recess	1	
-54	770017-1	SPACER, rack recess	1	
-55	769396-1	CLIP, rack recess	1	
	769671-5	CHANNEL INSTL, fuselage station 416 LH	1	
	769671-6	CHANNEL INSTL, fuselage station 416 RH	1	
	770111-23	LONGERON AND BEAM ASSY, fuselage station 358 to 422 lower rack recess LH	1	
	770111-24	LONGERON AND BEAM ASSY, fuselage station 358 to 422 lower rack recess RH	1	
-56	NAS1204-21	SCREW (80205)	2	
-57	NAS1204-22	SCREW (80205)	2	
	AN960D416	WASHER (88044)	4	
	MS21042L4	NUT (96906)	4	
-58	793163-2	PAD, fuselage station 400 rack recess LH	1	
	793163-1	PAD, fuselage station 400 rack recess RH	1	
-59	793165-1	SHIM, fuselage station 400 pad rack recess	1	
-60	770123-11	SKIN, fuselage station 358 to 422 rack recess LH	1	
-61	770123-12	SKIN, fuselage station 358 to 422 rack recess RH	1	
	769890-501	BEAM ASSY, lower LH	1	
	769890-502	BEAM ASSY, lower RH	1	
-62	769522-1	BEAM, lower LH	1	
-63	769522-2	BEAM, lower RH	1	
-64	769523-1	BEAM ASSY, upper LH	1	
-65	769523-2	BEAM ASSY, upper RH	1	
	769523-3	BEAM, upper LH	1	
	769523-4	BEAM, upper RH	1	
-66	769395-501	LONGERON ASSY, fuselage station 358 to 422 lower rack recess LH	1	
-67	769395-502	LONGERON ASSY, fuselage station 358 to 422 lower rack recess RH	1	
	769394-1	LONGERON, lower rack recess LH	1	
	769394-2	LONGERON, lower rack recess RH	1	
-68	770386-1	SUPPORT ASSY, left side forward fuel pump *(see fig. 40 for reqd)*	REF	
-69	770318-1	SUPPORT ASSY, right side forward fuel pump *(see fig. 40 for reqd)*	REF	
	769626-503	BEAM INSTL, rack recess center LH *(see fig. 40 for reqd)*	REF	
-70	769626-65	BEAM ASSY, rack recess center	1	
	769626-63	BEAM ASSY, rack recess center	1	
	770111-5	ATTACHMENT INSTL, lower fuselage station 358 to 422 rack recess *(see fig. 31 for reqd)*	REF	
-71	760228-4	SPACER, fuselage station 358 to 422 longeron rack recess	1	
-72	MS20005-46	BOLT (96906)	2	
-73	MS20002C5	WASHER, (under bolt head) (96906)	2	
-74	MS20002-5	WASHER, (under nut) (96906)	2	
-75	EB054	NUT, self-locking double hexagon high tension (72962)	2	
-76	LS4893-10	RETAINER, barrel nut (36659)	2	
-77	2752-108	NUT, barrel (72962)	2	
	787482-1	COVER INSTL, rack recess (NHA 849138-101)	1	
-78	787482-3	COVER, rack recess	1	
		Attaching Parts		
-79	NAS1204-6	SCREW (80205)	39	

Figura e particolare	NDR	1 2 3 4 5 6 7 DENOMINAZIONE	Quant.	Codice applicab.
		AFT SECTION ATTACHMENTS		
45	763441-5	SEAL INSTL, fuselage station 614 bulkhead *(see fig. 32 for reqd)*	REF	
- 1	763624	RETAINER, fuselage station 614 aft bulkhead	1	
- 2	763626	SEAL, fuselage station 614 aft bulkhead	1	
- 3	784311-1	FITTING ASSY, fuselage station 614 lower longeron LH *(see fig. 43 for reqd)*	REF	
- 4	784311-2	FITTING ASSY, fuselage station 614 lower longeron RH *(see fig. 43 for reqd)*	REF	
- 5	783017-1	FITTING, fuselage station 614 aft upper longeron *(see fig. 43 for reqd)*	REF	
- 6	NAS577-8A	NUT, self-locking, barrel (80205) (NHA 849136-101)	2	
- 7	NAS578-8B	RETAINER, barrel nut (80205) (NHA 849136-101)	2	
	783502-3	LONGERON INSTL, fuselage station 614 to 639 upper barrel *(see fig. 32 for reqd)*	REF	
	783502-11	DOOR ASSY, upper longeron *(see fig. 60)*	1	
	783502-12	DOOR ASSY, upper longeron *(see fig. 60)*	1	
- 8	783924-1	BOLT ASSY, upper longeron fuselage station 614	2	
- 9	728287-1	BOLT, fuselage station 614 upper fuselage attaching	1	
-10	783767-1	WASHER, fuselage station 614 upper fuselage attaching	1	
-11	725985-3	PIN, fuselage station 614 upper fuselage attaching safety	1	
-12	728298-1	RING, fuselage station 614 upper fuselage attaching	1	
-13	18 3-4	RING, fuselage station 614 upper fuselage attaching (75005)	1	
-14	783924-5	CHAIN, fuselage station 614 upper fuselage attaching	1	
		Attaching Parts		
-15	AN515-4R4	SCREW (88044)	1	
-16	MS21042L04	NUT (96906)	1	
		*		
	763441-503	SEAL INSTL, fuselage station 614 bulkhead (NHA 849140-101)	1	
-17	763623-3L	RETAINER, fuselage station 614 bulkhead seal	1	
-18	763623-3R	RETAINER, fuselage station 614 bulkhead seal	1	
-19	763623-7	RETAINER, fuselage station 614 bulkhead seal	2	
-20	763623-8	RETAINER, fuselage station 614 bulkhead seal	2	
-21	784200-1	STRIP, fuselage station 614 bulkhead seal	2	
-23	787469-3	RETAINER, fuselage station 614 bulkhead seal LH	1	
-24	787469-1	RETAINER, fuselage station 614 bulkhead seal RH	1	
-25	784558-1	STRIP, fuselage station 614 retainer seal	2	
-26	763625-3	SEAL, forward fuselage station 614 bulkhead	2	
-27	763625-4	SEAL, forward fuselage station 614 bulkhead	2	
-28	763625-5	SEAL, forward fuselage station 614 bulkhead	2	
-29	763625-6	SEAL, forward fuselage station 614 bulkhead	2	
-31	763625-13	SEAL, forward fuselage station 614 bulkhead LH	1	
-32	763625-11	SEAL, forward fuselage station 614 bulkhead RH	1	
-33	763627-3	SEAL, fuselage station 614 bulkhead bulb	2	
-34	763627-4L	SEAL, fuselage station 614 bulkhead bulb	1	
-35	763627-4R	SEAL, fuselage station 614 bulkhead bulb	1	
-36	763627-5L	SEAL, fuselage station 614 bulkhead bulb	1	
-37	763627-5R	SEAL, fuselage station 614 bulkhead bulb	1	
-38	763625-9	SEAL, forward fuselage station 614 bulkhead	2	
-39	763628	WASHER, fuselage station 614 bulb seal attaching	14	
-40	783172-501	FITTING ASSY, fuselage station 614 longeron LH *(see fig. 42 for reqd)*	REF	
-41	783172-502	FITTING ASSY, fuselage station 614 longeron RH *(see fig. 42 for reqd)*	REF	
	783183-101	BOLT ASSY, fuselage station 614 lower attachment (NHA 849071-101)	2	
-42	783183-103	BOLT ASSY, lower fuselage attachment	1	
-43	LS9326-2	BOLT, fuselage station 614 lower fuselage attaching (36659)	1	
-44	726088-3	WASHER, fuselage station 614 lower fuselage attaching	1	
-45	726087-3	RING, fuselage station 614 lower fuselage attaching	1	
-46	726089-3	PIN, fuselage station 614 lower fuselage attaching safety	1	
-47	18 3-4	RING, fuselage station 614 lower fuselage attaching (75005)	1	
-48	761798-5	CHAIN, fuselage station 614 lower fuselage attaching	1	
-49	783086-1	FITTING ASSY, fuselage station 614 upper longeron LH *(see fig. 42 for reqd)*	REF	
-50	783086-2	FITTING ASSY, fuselage station 614 upper longeron RH *(see fig. 42 for reqd)*	REF	
-51	SL40-14	NUT, self-locking, barrel (97393) *(see fig. 31 for reqd)*	REF	
-52	LS4893-14C	RETAINER, barrel nut (36659) *(see fig. 31 for reqd)*	REF	

Fuselage Structure

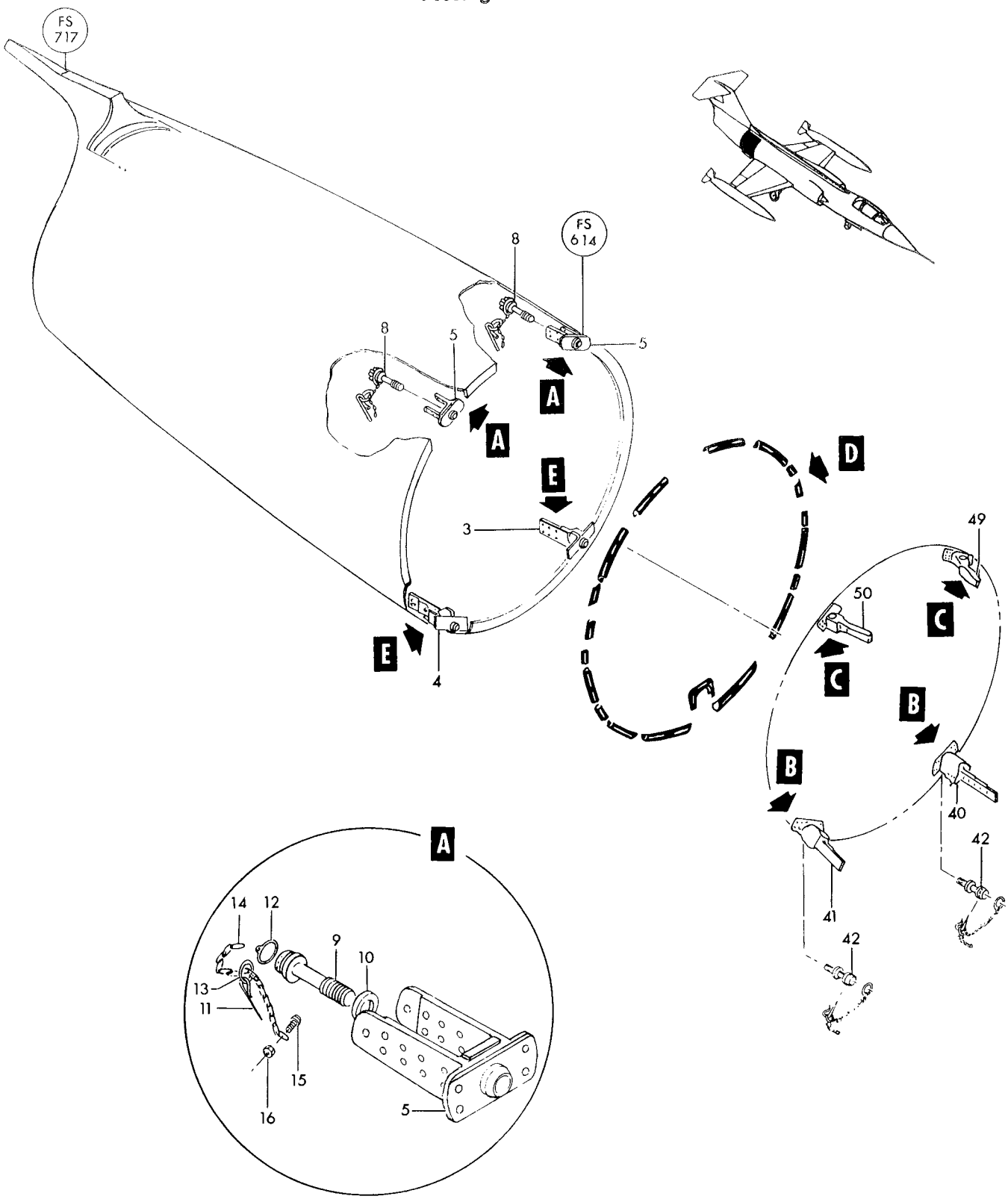

Figure 45—Aft Section Attachments (Sheet 1 of 2)

Fuselage Structure

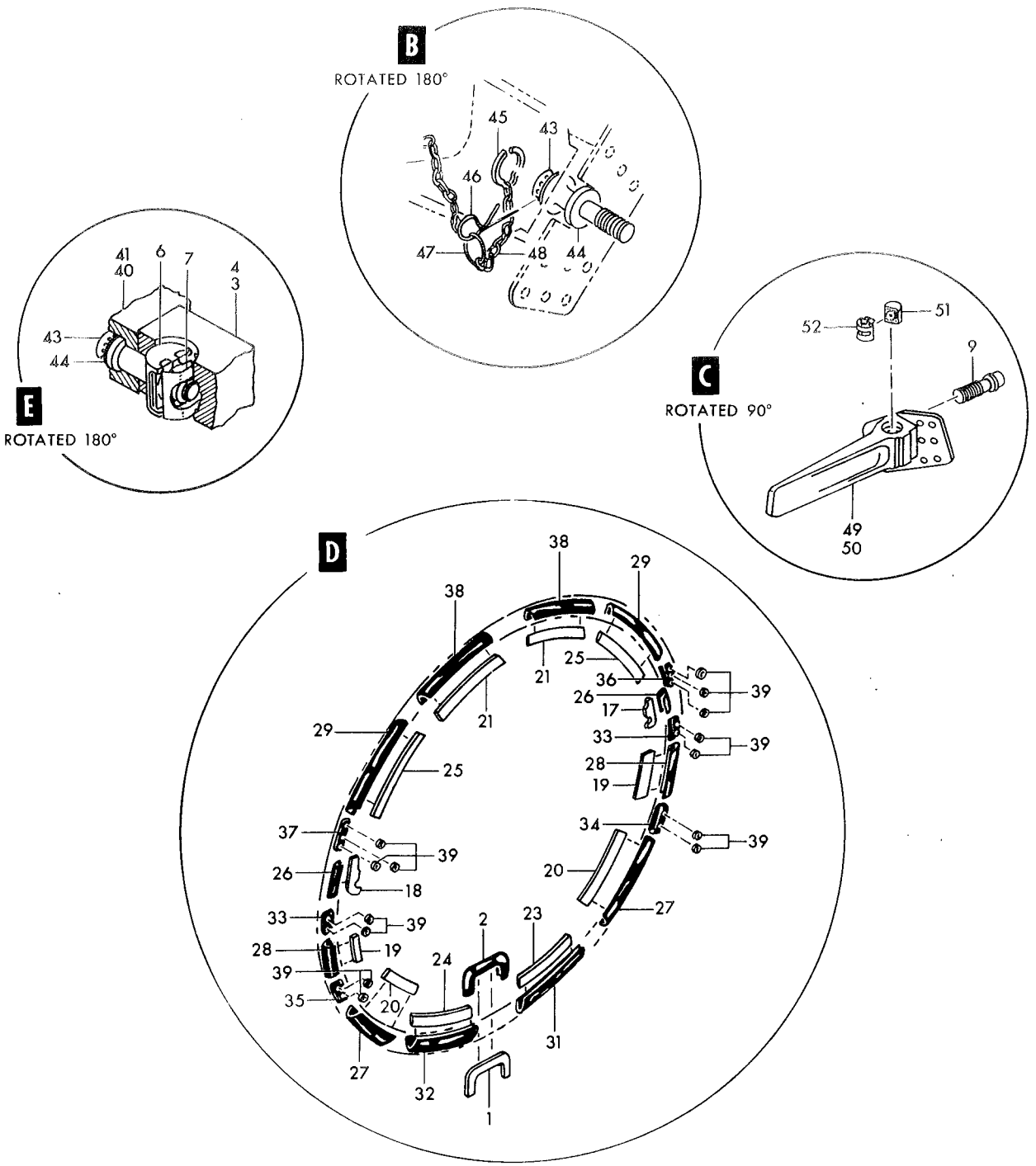

Figure 45—Aft Section Attachments (Sheet 2 of 2)

Figura e particolare	NDR	DENOMINAZIONE 1 2 3 4 5 6 7	Quant.	Codice applicab.
		ELECTRICAL BAY ACCESS DOOR		
46	790854-1	DOOR INSTL, fuselage station 255 to 315 RH electrical bay access (NHA 849141-101)	1	6701-6765
	790854-101	DOOR INSTL, fuselage station 255 to 315 RH electrical bay access (NHA 849141-101)	1	6766-
-1	R4G	RING, camloc fastener snap (71286)	33	
-2	4002-3	STUD, camloc fastener (71286)	33	
-3	4002G	GROMMET, camloc fastener (71286)	33	
-4	790854-3	DOOR ASSY, fuselage station 255 to 315 RH electrical bay access	1	
-5	MS27253-2	NAMEPLATE, identification and modification (96906)	1	
-6	797712-1	DECAL, electrical bay door prop	1	
-7	R4G	RING, camluc fastener snap (71286)	7	
-8	4002-2	STUD, camloc fastener (71286)	7	
-9	4002G	GROMMET, camloc fastener (71286)	7	
-10	784133-5	DOOR ASSY, inner electrical bay access	1	
-11	726280-3	SPRING, access door hinge	2	
-12	762793-16	PIN, bay door hinge	1	
-13	762791	HINGE, access door lower half	1	
-14	762790	HINGE, access door upper half	1	
	790854-5	DOOR ASSY, electrical bay access	1	
	790855-1	SCOOP INSTL, refrigerator ram air	1	
-15	790853-1	SCOOP ASSY, refrigerator ram air *(see fig. 151)*	1	
-16	762792	HINGE, electrical bay access door half	1	
		Attaching Parts		
-17	NAS517-3-3	SCREW (80205)	19	
-18	NAS1203-4	SCREW (80205)	2	
		*		
	774675-1	DOOR INSTL, electrical bay oxygen bottle filler access	1	
-19	774675-3	DOOR ASSY, oxygen bottle access	1	
-20	774675-9	PIN, hinge	1	
-21	727835-1	SPRING, oxygen bottle access door hinge	2	
-22	774676-1	HINGE, oxygen bottle access door half	1	
-23	774677-1	HINGE, oxygen bottle access door half	1	
-24	R4G	RING, camloc fastener snap (71286)	4	
-25	4002-2	STUD, camloc fastener (71286)	4	
-26	4002G	GROMMET, camloc fastener (71286)	4	
-27	762793-13	PIN, electrical bay door hinge	1	
-28	LS408	CLIP (hinge pin lock) (36659)	1	
		Attaching Parts		
-29	NAS1203-4	SCREW (80205)	1	
-30	AN960D10	WASHER (88044)	1	
-31	MS21042L3	NUT (96906)	1	
		*		
	788202-1	SUPPORT AND PROP INSTL, electrical bay door (NHA 849141-101)	1	
	788202-3	SUPPORT ASSY, electrical bay door prop	1	
-32	763039-7	SHIM, electrical bay door	1	
-33	763039-8	FILLER, electrical bay door	1	
-34	788202-7	SUPPORT, electrical bay door	1	
		Attaching Parts		
-35	NAS623-3-5	SCREW (80205)	3	
		*		
-36	763144	PLATE, electrical bay door prop	1	
-37	NAS43-3-42	SPACER (80205)	1	
-38	763143	PLATE, electrical bay door prop adjustment	1	
-39	NAS623-3-18	SCREW (80205)	1	
-40	AN960C10L	WASHER (88044)	1	
-41	LS881-7	WASHER, aluminum (36659)	1	
-42	MS21042L3	NUT (96906)	1	
-43	778024-1	PROP ASSY, RH electrical bay door	1	
-44	778023-1	TUBE, door prop	1	

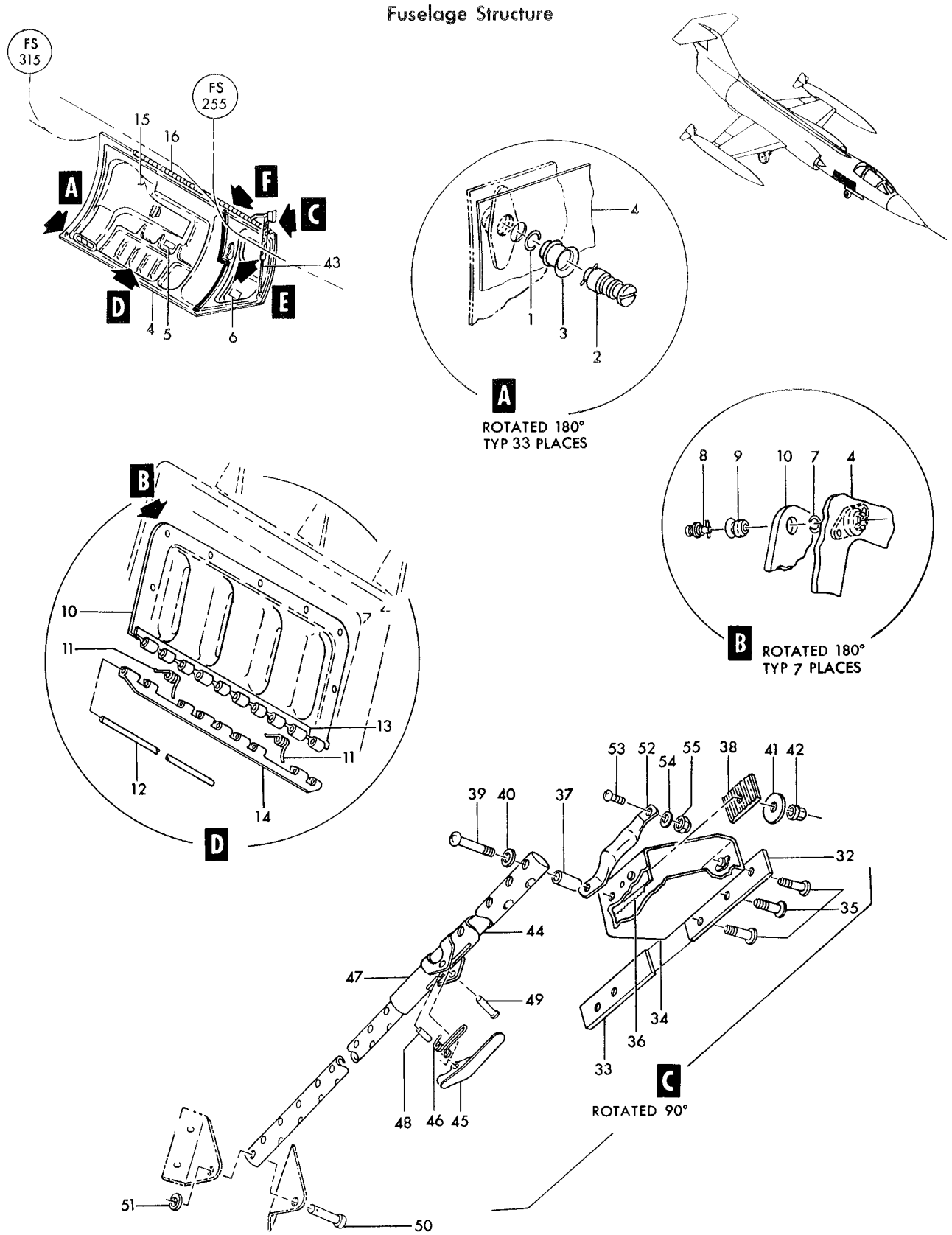

Figure 46—Electrical Bay Access Door (Sheet 1 of 2)

Fuselage Structure

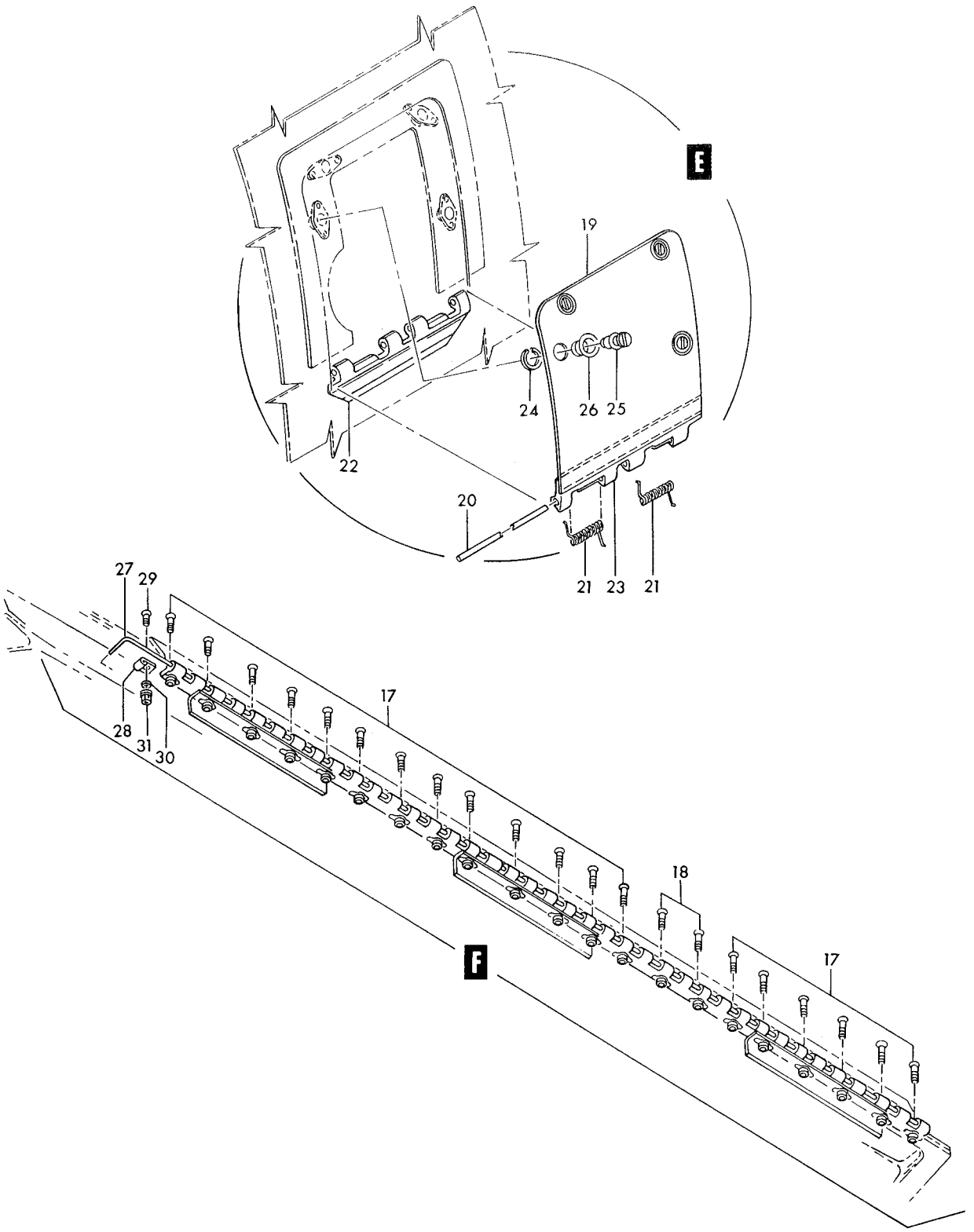

Figure 46—Electrical Bay Access Door (Sheet 2 of 2)

Figura e particolare	NDR	DENOMINAZIONE 1 2 3 4 5 6 7	Quant.	Codice applicab.
46-45	778021-1	TRIGGER, door prop	1	
-46	762065	SPRING, door prop	1	
-47	761981-7	TUBE ASSY, ammunition compartment cover	1	
-48	762068	SPACER, door prop	1	
-49	LS1121-4-27	RIVET, semi-tubular (36659)	1	
-50	MS20392-2C21	PIN (96906)	1	
-51	AN960C10	WASHER (88044)	1	
-52	778154-1	TRUSS, electrical bay door prop	1	
		Attaching Parts		
-53	NAS623-3-3	SCREW (80205)	1	
-54	AN960D10	WASHER (88044)	1	
-55	MS21042L3	NUT (96906)	1	

Figura e particolare	NDR	DENOMINAZIONE	Quant.	Codice applicab.
		ELECTRONIC COMPARTMENT COVER		
47	784086-109	COVER INSTL, electronic compartment (NHA 849141-101)	1	
-1	784086-113	COVER ASSY, electronic compartment *(see fig. 176)*	1	
	784534-1	DORSAL INSTL, electronic compartment cover	1	
-2	NAS517-3-2	SCREW (80205)	1	
-3	NAS623-3-3	SCREW (80205)	2	
-4	NAS623-3-2	SCREW (80205)	10	
-5	784472-503	ANTENNA ASSY, dorsal fin complete iff *(see fig. 200)*	1	
	784282-1	DORSAL ASSY, electronic compartment cover *(see fig. 59)*	1	
	763562	PLUG INSTL, electronic compartment mechanism witness hole	1	
-6	763563	PLUG ASSY, electronic compartment mechanism witness hole	4	
		Attaching Parts		
	AN507-632R6	SCREW (88044)	1	
	AN960D6	WASHER (88044)	1	
	MS21042L06	NUT (96906)	1	
		*		
	784086-9	PANEL ASSY, electronic compartment	1	
-7	760209-59	SEAL, electronic compartment cover	1	
-8	760209-53	GUARD, electronic compartment panel	1	
-9	784088-1	PANEL ASSY, electronic compartment cover transparent	1	
-10	761577L	RAIL, electronic compartment cover	1	
	761577R	RAIL, electronic compartment cover	1	
		Attaching Parts		
-11	NAS1203-9	SCREW (80205)	19	
-12	NAS1203-11	SCREW (80205)	2	
	AN960D10	WASHER (88044)	15	
	MS21042L3	NUT (96906)	13	
		*		
-13	780060-3	CLIP, electronic compartment cover	1	
	784089-1	BRACE INSTL, electronic compartment cover	1	
-14	782860-1	SHIM, aft canopy pivot	15	
-15	NAS517-3-5	SCREW (80205)	2	
-16	AN960D10	WASHER (88044)	2	
-17	MS21042L3	NUT (96906)	2	
-18	780060-5	FRAME, electronic compartment cover	1	
-19	780060-7	GUSSET, electronic compartment cover	1	
-20	780060-9	GUSSET, electronic compartment cover	1	
-21	NAS623-3-2	SCREW (80205)	10	
-22	AN960D10	WASHER (88044)	10	
-23	MS21042L3	NUT (96906)	10	
-24	762555	ANGLE, seal retainer	1	
-25	762556	ANGLE, seal retainer	1	
-26	784086-5	BULKHEAD ASSY, electronic compartment cover	1	
-27	762557	ANGLE, seal retainer	1	
-28	762558	ANGLE, seal retainer	1	
-29	762559	ANGLE, seal retainer	1	
-30	762576	ANGLE, seal retainer	1	
-31	762594L	SUPPORT, electronic canopy pressure seal	1	
-32	762594R	SUPPORT, electronic canopy pressure seal	1	
-33	774115-1	SUPPORT, electronic canopy pressure seal angle	1	
-33A	780935-1	SUPPORT ASSY, defogger duct	1	
-34	784151-1	STIFFENER, electronic compartment cover brace LH	1	
-34A	784151-2	STIFFENER, electronic compartment cover brace RH	1	
-35	NAS623-3-2	SCREW (80205)	4	
-36	NAS623-3-4	SCREW (80205)	2	
-37	AN960D10	WASHER (88044)	6	
-38	MS21042L3	NUT (96906)	6	
	762848-4	LATCH INSTL, electronic compartment cover mechanism *(see fig. 48)*	1	
-39	MS27253-1	NAMEPLATE (96906)	1	
-40	760209-23	PLATE, electronic compartment cover splice	4	

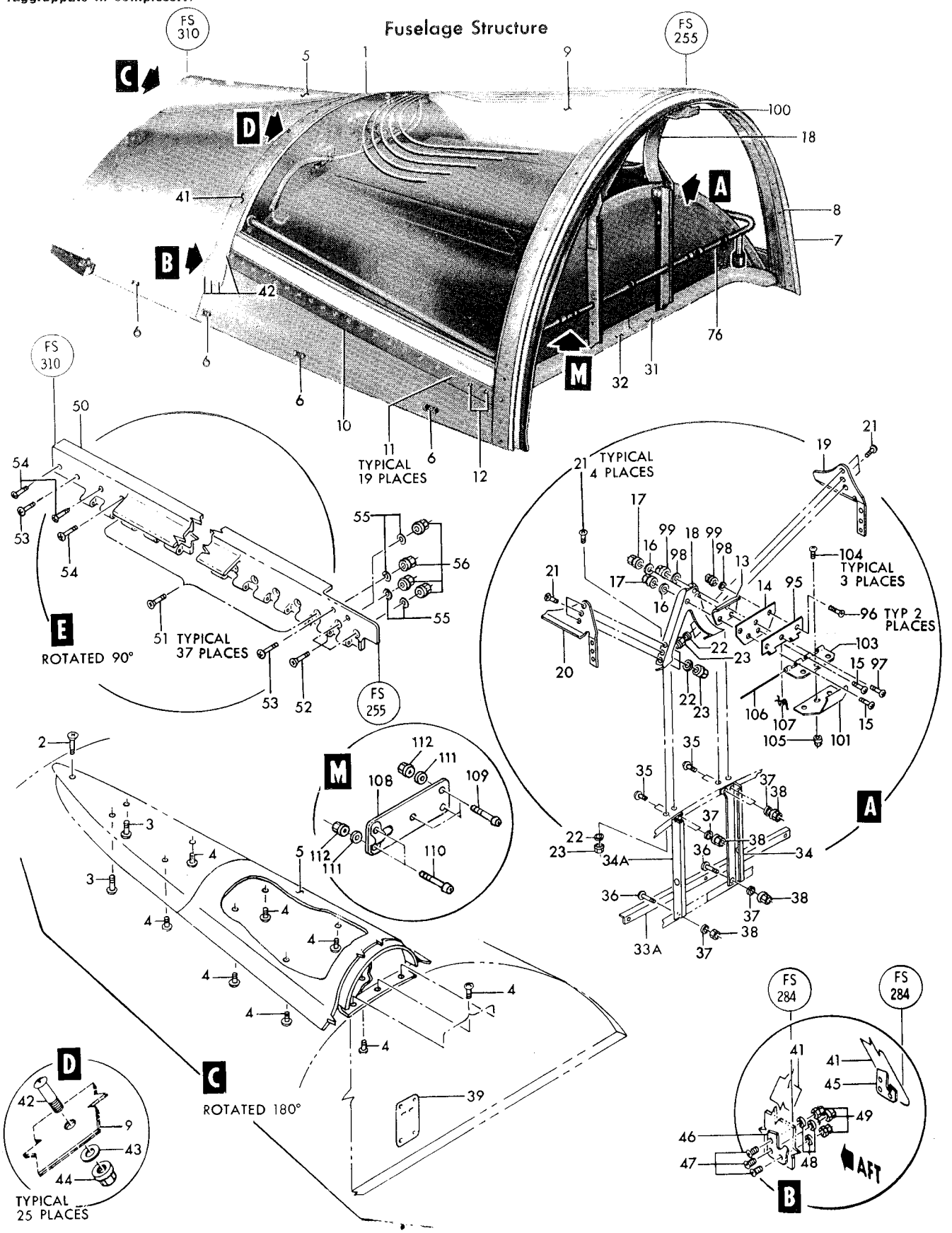

Figure 47—Electronic Compartment Cover (Sheet 1 of 2)

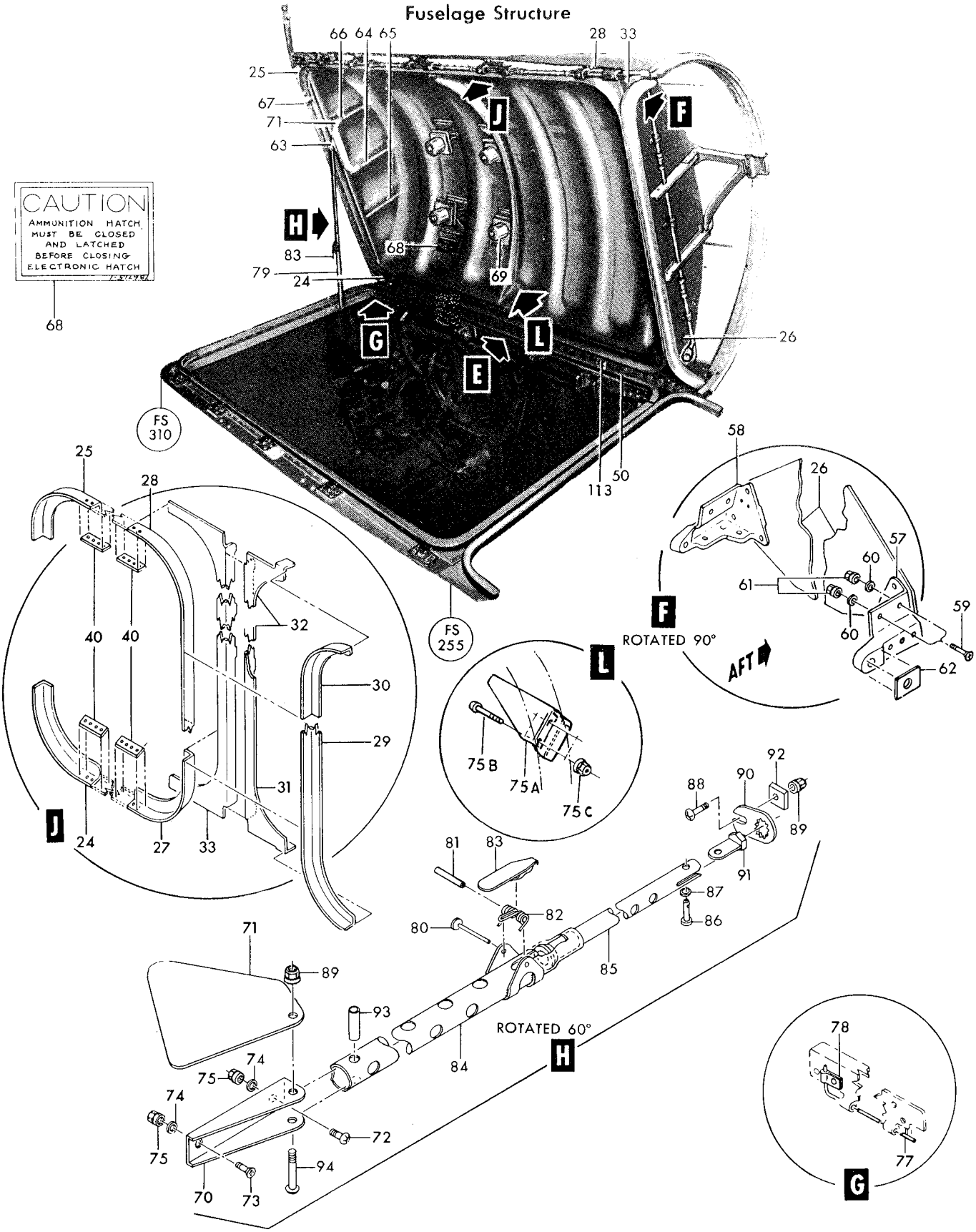

Figure 47—Electronic Compartment Cover (Sheet 2 of 2)

Figura e particolare	NDR	1 2 3 4 5 6 7 DENOMINAZIONE	Quant.	Codice applicab.
47-41	760209-24	RETAINER, electronic compartment cover (glass)	1	
		Attaching Parts		
-42	NAS1203-2	SCREW (80205)	33	
-43	AN960D10	WASHER (88044)	25	
-44	MS21042L3	NUT (96906)	25	
-45	762196L	RETAINER, electronic compartment cover panel seal	1	
-46	762196R	RETAINER, electronic compartment cover panel seal	1	
		Attaching Parts		
-47	AN515-6R6	SCREW (88044)	3	
-48	AN960D6	WASHER (88044)	3	
-49	MS21042L06	NUT (96906)	3	
	784086-25	LONGERON ASSY, electronic compartment cover LH	1	
	784086-26	LONGERON ASSY, electronic compartment cover RH	1	
-50	774177-1	HINGE, electronic compartment cover upper	1	
		Attaching Parts		
-51	NAS517-3-3	SCREW (80205)	37	
-52	NAS1203-6	SCREW (80205)	2	
-53	NAS623-3-5	SCREW (80205)	2	
-54	NAS623-3-4	SCREW (80205)	3	
-55	AN960D10	WASHER (88044)	4	
-56	MS21042L3	NUT (96906)	4	
-57	762441L	SUPPORT, fwd cover	1	
-58	762441R	SUPPORT, fwd cover	1	
		Attaching Parts		
-59	NAS1203-11	SCREW (80205)	2	
-60	AN960D10	WASHER (88044)	2	
-61	MS21042L3	NUT (96906)	2	
-62	760209-31	SHIM, electronic compartment cover	1	
	784086-111	BULKHEAD ASSY, electronic compartment cover	1	
-63	760209-15	ZEE, electronic compartment cover	1	
-64	760209-16	STIFFENER, electronic compartment cover	1	
-65	760209-17	STIFFENER, electronic compartment cover	1	
-66	760209-30	STIFFENER, electronic compartment cover	1	
-67	784086-13	STOP, electronic compartment cover	1	
-68	786715-1	DECAL, electronic compartment cover	1	
-69	784636-3	SUPPORT INSTL, electronic compartment cover phi computer *(see fig. 176)*	1	
	784589-3	BRACKET INSTL, electronic compartment cover	1	
-70	798699-101	CHANNEL, electronic compartment cover prop	1	
-71	798700-101	BRACKET, electronic compartment cover prop	1	
-72	NAS623-3-2	SCREW (80205)	1	
-73	NAS1203-2	SCREW (80205)	1	
-74	AN960-10L	WASHER (88044)	2	
-75	MS21042L3	NUT (96906)	2	
-75A	851261-101	BRACKET, alert align unit mounting connector *(see fig. 176 for reqd)*	REF	
		Attaching Parts		
-75B	NAS623-3-1	SCREW (80205) *(see fig. 176 for reqd)*	2	
-75C	MS21042L3	NUT (96906) *(see fig. 176 for reqd)*	2	
-76	785552-3	DUCT INSTL, electronic compartment defogging *(see fig. 143)*	1	
-77	760209-51	PIN, electronic compartment cover hinge	1	
-78	762793-17	LOCK, fus sta 255 to 315 electrical bay access door RH	1	
	784589-1	PROP INSTL, electronic compartment cover	1	
-79	784314-1	PROP ASSY, electronic compartment cover	1	
-80	LS1121-4-27	RIVET, semi tubular (36659)	1	
-81	762068	SPACER, prop electronic compartment cover	1	

Figura e particolare	NDR	DENOMINAZIONE	Quant.	Codice applicab.
47-82	762065	SPRING, prop electronic compartment cover	1	
-83	761984	TRIGGER, prop electronic compartment cover	1	
-84	784312-1	TUBE ASSY, electronic compartment cover prop	1	
-85	784313-1	TUBE ASSY, electronic compartment cover prop	1	
-86	MS20392-2C17	PIN (96906)	1	
-87	AN960C10	WASHER (88044)	1	
-88	NAS623-3-3	SCREW (80205)	1	
-89	MS21042L3	NUT (96906)	2	
-90	LS451-42	LOCK, hex bolt (36659)	1	
-91	728316-1	FITTING, electronic compartment cover	1	
-92	784315-1	SPACER, electronic compartment cover prop fitting	1	
-93	NAS42HT6-44	SPACER (80205)	1	
-94	NAS517-3-14	SCREW (80205)	1	
	LS2816-4	WASHER, csk (36659)	AR	
-95	782861-1	HINGE, canopy aft pivot upper retainer (half)	1	
		Attaching Parts		
-96	NAS623-3-5	SCREW (80205)	2	
-97	NAS623-3-6	SCREW (80205)	1	
-98	AN960D10	WASHER (88044)	3	
-99	MS21042L3	NUT (96906)	3	
-100	FL0242-101	CLIP ASSY, canopy aft pivot retainer	1	
-101	MBEU1033GQ5	FLAP, canopy arch retaining (U1604) (see AA13-IQ7A-4) *(see fig. 212 for reqd)*	REF	
-103	782862-1	HINGE, canopy aft pivot lower retainer (half)	1	
-104	NAS623-3-2	SCREW (80205) *(see fig. 212)*	3	
-105	MS21042L3	NUT (96906)	3	
-106	780060-49	PIN, canopy aft pivot retainer hinge	1	
-107	780060-51	SPRING, electronic compartment cover clip detent	1	
-108	MBEU9684-3	COVER STOWAGE OF DUST (U1604) (see AA13-IQ7A-4)	1	
		Attaching Parts		
-109	AN507-832R6	SCREW (88044)	3	
-110	AN515-8R8	SCREW (88044)	2	
-111	AN960D8	WASHER (88044)	5	
-112	MS21042L08	NUT (96906)	5	
-113	761576	HINGE, electronic compartment cover lower *(see fig. 48 for reqd)*	REF	

Figura e particolare	NDR	1 2 3 4 5 6 7 DENOMINAZIONE	Quant.	Codice applicab.
		ELECTRONIC COMPARTMENT COVER HINGE, SEAL, TRANSVERSE SUPPORT AND LATCHING MECHANISM		
48	761578-3	. HINGE INSTL, electronic compartment cover (LH only) *(see fig. 30 for reqd)*	REF	
-1	761576	. . HINGE, electronic compartment cover lower *(see fig. 47)*	1	
		Attaching Parts		
-2	NAS623-3-4	. . SCREW (80205)	21	
-3	NAS1203-2	. . SCREW (80205)	18	
-4	NAS1203-4	. . SCREW (80205)	2	
-5	NAS623-3-6	. . SCREW (80205)	1	
-6	AN960-10	. . WASHER (88044)	42	
-7	LS881-14	. . WASHER, plain aluminum (36659)	4	
-8	MS21042L3	. . NUT (96906)	42	
		*		
	761578-5	. RETAINER INSTL, electronic compartment cover (RH only) *(see fig. 30 for reqd)*	REF	
-9	761578-9	. . RETAINER, electronic compartment cover	1	
-10	NAS1203-4	. . SCREW (80205)	1	
-11	AN960-10	. . WASHER (88044)	1	
-12	MS21042L3	. . NUT (96906)	1	
	761578-503	. RETAINER INSTL, electronic compartment cover *(see fig. 39 for reqd)*	REF	
-13	761578-19	. . RETAINER, electronic compartment cover	1	
	761578-507	. RETAINER AND FAIRING INSTL, electronic compartment cover (LH only) *(see fig. 30 for reqd)*	REF	
-14	761581	. . FAIRING, electronic compartment still forward	1	
-15	785003-1	. . RETAINER, electronic compartment cover seal forward LH	1	
		Attaching Parts		
-16	NAS1203-5	. . SCREW (80205)	1	
-17	NAS1203-4	. . SCREW (80205)	1	
	AN960-10L	. . WASHER (88044)	2	
	MS21042L3	. . NUT (96906)	2	
		*		
-18	782619-1	. . WASHER, fuselage station 255 to 260 cross beam	1	
-19	782619-3	. . WASHER, fuselage station 255 to 260 cross beam	1	
-20	762214	. . RETAINER, electronic compartment cover seal aft LH	1	
-21	762548	. . FAIRING, electronic compartment still aft	1	
		Attaching Parts		
-22	NAS623-3-2	. . SCREW (80205)	3	
-23	AN960-10	. . WASHER (88044)	3	
-24	MS21042L3	. . NUT (96906)	3	
		*		
	761578-505	. SEAL INSTL, electronic compartment cover (NHA 849141-101)	1	
-25	751104-1	. . SEAL ASSY, electronic compartment cover *(see fig. 139)*	1	
-26	761730	. . CLIP, canopy seal retaining	1	
-27	785002-1	. . RETAINER, electronic compartment cover seal forward RH	1	
		Attaching Parts		
-28	NAS1203-4	. . SCREW (80205)	3	
	AN960-10L	. . WASHER (88044)	3	
	MS21042L3	. . NUT (96906)	3	
		*		
-29	762215	. . RETAINER, electronic compartment cover	1	
-30	AN365-832	A. . NUT (88044)	1	6701-6740
-31	AN960-8	. . WASHER (88044)	1	
-32	NAS42DD5-38	. . SPACER (80205)	1	
-33	AN515-8R20	. . SCREW (88044)	1	
-34	3-16 3	. . CLAMP, hose (77860)	1	
	784446-1	. SUPPORT INSTL, electronic compartment transverse beam (NHA 849141-101)	1	
-35	784446-7	. . SUPPORT ASSY, transverse beam electronic compartment	1	
-36	784442-1	. . . BEAM ASSY, electronic compartment transverse	1	
-37	784443-1	. . . BRACKET, electronic compartment transverse beam support LH	1	
-38	784443-2	. . . BRACKET, electronic compartment transverse beam support RH	1	
-39	784445-1	. . . SHIM, electronic compartment transverse beam support (10 max)	AR	

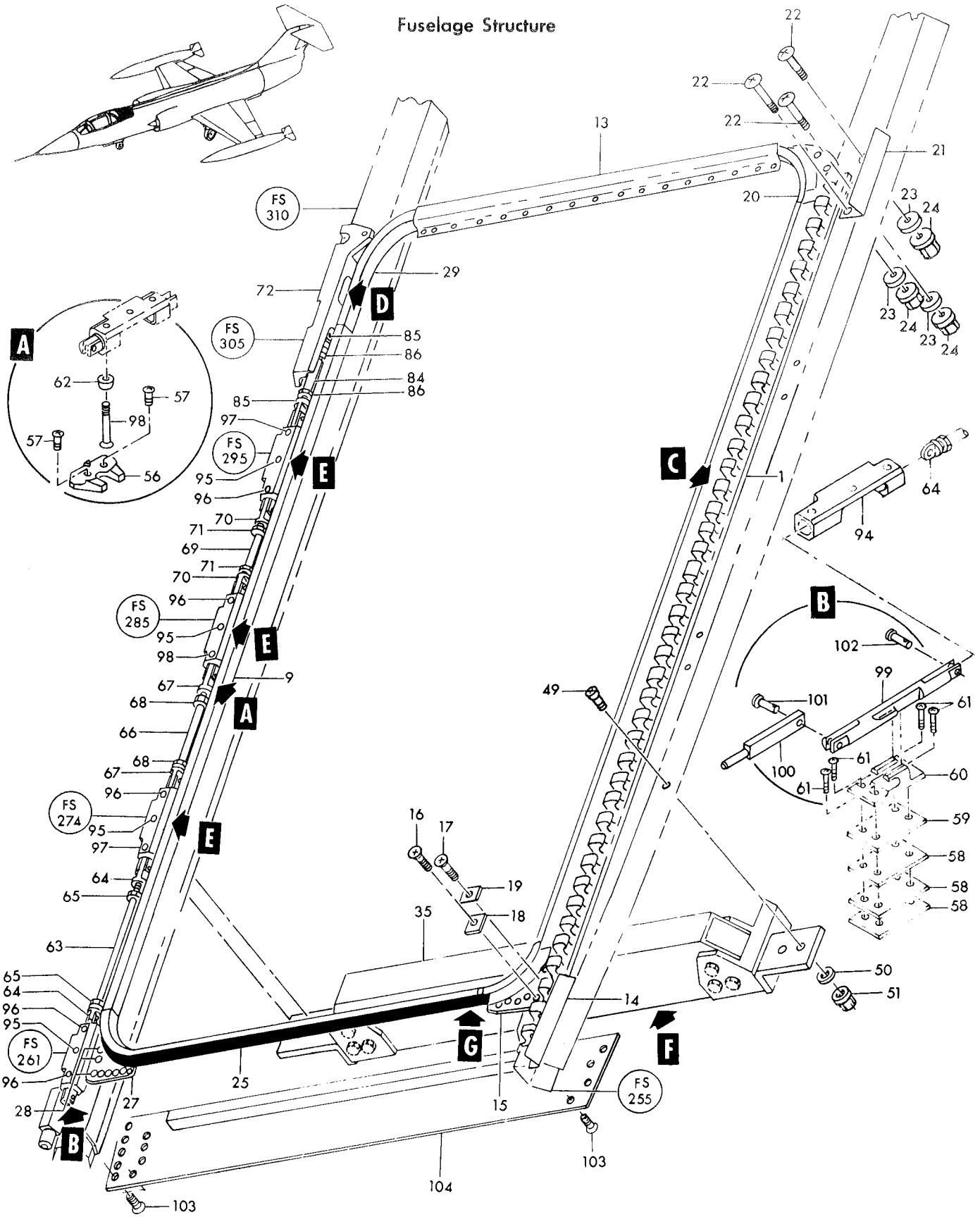

Figure 48—Electronic Compartment Cover Hinge Seal, Transverse Support and Latching Mechanism (Sheet 1 of 2)

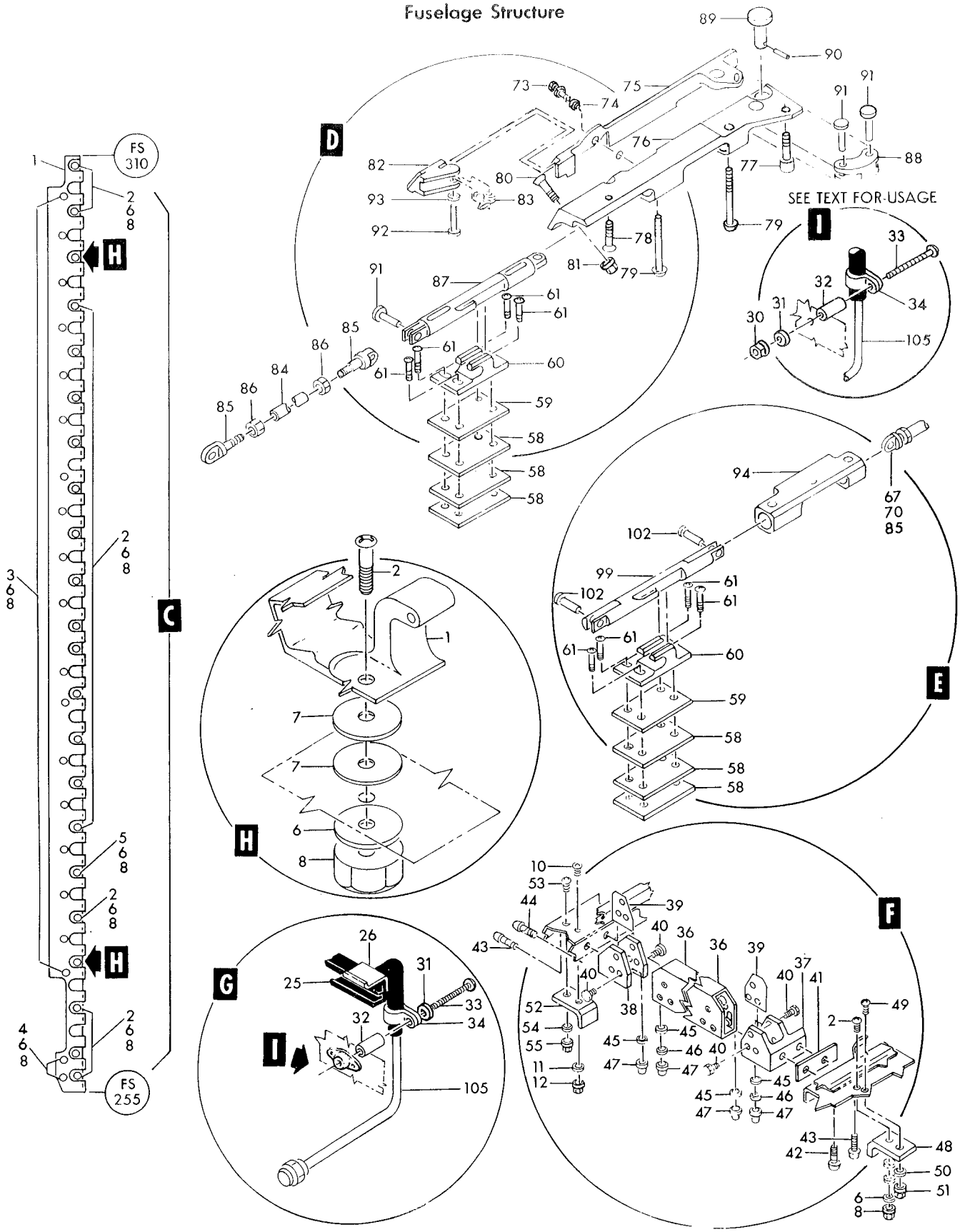

Figure 48—Electronic Compartment Cover Hinge, Seal, Transverse Support and Latching Mechanism (Sheet 2 of 2)

Figura e particolare	NDR	DENOMINAZIONE	Quant.	Codice applicab.
48-40	NAS1104-4	BOLT (80205)	12	
-41	784444-1	SHIM, electronic compartment transverse beam support (3 max)	AR	
-42	MS20004-12	BOLT (96906)	1	
-43	MS20004-10	BOLT (96906)	2	
-44	MS20004-8	BOLT (96906)	1	
-45	MS20002C4	WASHER (96906)	4	
-46	MS20002-4	WASHER (96906)	2	
-47	EB048	NUT, self-loking double hexagon high tension (72962)	4	
	784446-3	ANGLE INSTL, electronic compartment transverse beam LH *(see fig. 38 for reqd)*	REF	
-48	766115-11	ANGLE, electronic compartment transverse beam	1	
-49	NAS1203-4	SCREW (80205)	1	
-50	AN960-10L	WASHER (88044)	1	
-51	MS21042L3	NUT (96906)	1	
	784446-5	ANGLE INSTL, electronic compartment transverse beam RH *(see fig. 38 for reqd)*	REF	
-52	766115-11	ANGLE, electronic compartment transverse beam	1	
-53	NAS623-3-4	SCREW (80205)	1	
-54	AN960-10L	WASHER (88044)	1	
-55	MS21042L3	NUT (96906)	1	
	762848-3	CATCH INSTL, electronic compartment cover RH *(see fig. 30 for reqd)*	REF	
-56	772600-1	GUIDE, electronic compartment cover mechanism index	1	
		Attaching Parts		
-57	NAS221-8	SCREW (80205)	2	
		*		
-58	763062	SHIM, cover catch (3 reqd per catch)	15	
-59	763061	PLATE, latching mechanism adjusting	5	
-60	763049	CATCH, latching mechanism	5	
		Attaching Parts		
-61	NAS623-3-6	SCREW (80205)	4	
		*		
	762848-4	LATCH INSTL, electronic compartment cover mechanism *(see fig. 47 for reqd)*	REF	
-62	726371-3	SPACER, latching mechanism	1	
	763059-5	TUBE ASSY, electronic compartment cover latching mechanism	1	
-63	763055-5	TUBE, electronic compartment cover latching mechanism	1	
-64	726310-3	ROD END, latching mechanism	2	
-65	AN316-4R	NUT (88044)	2	
	763059-4	TUBE ASSY, electronic compartment cover latching mechanism	1	
-66	763055-4	TUBE, electronic compartment cover latching mechanism	1	
-67	726310-3	ROD END, latching mechanism	2	
-68	AN316-4R	NUT (88044)	2	
	763059-3	TUBE ASSY, electronic compartment cover latching mechanism	1	
-69	763055-3	TUBE, electronic compartment cover latching mechanism	1	
-70	726310-3	ROD END, latching mechanism	2	
-71	AN316-4R	NUT (88044)	2	
	763054	HOUSING ASSY, aft electronic compartment cover latching mechanism	1	
-72	763054-3	HANDLE ASSY, latching mechanism	1	
-73	4002-6	STUD, camloc fastener (71286)	1	
-74	4002H	GROMMET, camloc fastener (71286)	1	
	R4G	RING, camloc fastener snap (71286)	1	
-75	763057	HANDLE, latching mechanism	1	
-76	763054-4	HOUSING ASSY, aft latching mechanism	1	
		Attaching Parts		
-77	NAS221-10	SCREW (80205)	1	
-78	NAS517-3-6	SCREW (80205)	1	
-79	NAS623-3-16	SCREW (80205)	2	
-80	NAS1203-2	SCREW (80205)	1	
-81	MS21042L3	NUT (96906)	1	
		*		
	763053	HOUSING, aft	1	
-82	763058	DETENT, latching mechanism	1	
-83	726311-3	SPRING, latching mechanism detent	1	

Figura e particolare	NDR	DENOMINAZIONE 1 2 3 4 5 6 7	Quant.	Codice applicab.
48	763059-3	TUBE ASSY, electronic compartment cover latching mechanism	1	
-84	763055-3	TUBE, electronic compartment cover latching mechanism	1	
-85	726310-3	ROD END, latching mechanism	2	
-86	AN316-4R	NUT (88044)	2	
-87	763052	BAR, latching mechanism aft lock	1	
-88	766153-1	LINK, latching mechanism	1	
-89	764992	PIN, aft housing assembly	1	
-90	NAS561P3-12	ROLLPIN (80205)	1	
-91	MS20392-2C13	PIN (96906)	3	
-92	MS20392-1C25	PIN (96906)	1	
-93	AN960C6	WASHER (88044)	1	
-94	763051	HOUSING, latching mechanism	4	
-95	NAS517-3-6	SCREW (80205)	4	
-96	NAS623-3-16	SCREW (80205)	5	
-97	NAS1203-22	SCREW (80205)	2	
-98	NAS1203-20	SCREW (80205)	1	
-99	763050	BAR, latching mechanism lock	4	
-100	765867-1	ROD, latching mechanism lock	1	
-101	MS20392-2C23	PIN (96906)	1	
-102	MS20392-2C13	PIN (96906)	7	
	793283-1	BEAM INSTL, fuselage station 255 to 259 cross *(see fig. 30 for reqd)*	REF	
-103	NAS1203-2	SCREW (80205)	13	
	AN960-10L	WASHER (88044)	13	
	MS21042L3	NUT (96906)	13	
-104	793283-3	BEAM ASSY, fuselage station 255 to 259 cross	1	
	784238-13	RETAINER INSTL, aft seal *(see fig. 203)*	1	
-105	781704-57	TUBE ASSY, canopy seal pressurization (NHA 784973-1) *(see fig. 139 for reqd)*	REF	

A - Removed per AA.1F-104S-OT-109

Figura e particolare	NDR	DENOMINAZIONE	Quant.	Codice applicab.
		AMMUNITION/FUEL COMPARTMENT COVER		
49	784123-107	COVER INSTL, ammunition/fuel compartment (NHA 849141-101)	1	
	784123-55	PROP AND FITTING INSTL, ammunition/fuel compartment cover	1	
-1	MS20392-2C15	PIN (96906)	1	
-2	MS21042L3	NUT (96906)	1	
-3	NAS623-3-14	SCREW (80205)	1	
-4	AN960C10	WASHER (88044)	1	
-5	762064	FITTING, access door	1	
-6	761983-11	PROP ASSY, ammunition compartment cover	1	
-7	LS1121-4-27	RIVET, semitubular (36659)	1	
-8	762068	SPACER, prop	1	
-9	762065	SPRING, prop	1	
-10	761984	TRIGGER, prop	1	
-11	761981-6	TUBE ASSY, ammunition compartment cover	1	
-12	761980-7	TUBE, ammunition compartment cover	1	
-13	784123-109	COVER ASSY, ammunition/fuel compartment *(see fig. 59)*	1	
-14	MS21042L4	NUT (96906)	1	
-15	AN960-416L	WASHER (88044)	1	
-16	728363-1	EYEBOLT, antenna cover	1	
-17	NAS517-3-3	SCREW (80205)	1	
	795979-1	RETAINER, hinge pin	1	
-18	796774-1	PIN, ammunition compartment cover hinge	1	
-19	785898-1	HINGE, ammunition compartment cover lower	1	
-20	764961-6	HINGE, ammunition compartment cover upper	1	
		Attaching Parts		
-21	NAS623-3-2	SCREW (80205)	19	
		*		
-22	764927-501	LATCH ASSY, ammunition compartment	2	
		Attaching Parts		
	AN507-1032R8	SCREW (88044)	8	
		*		
-23	MS16624-1018	RING (96906)	2	
-24	LS1673-3-18	PIN, retainer ring (36659)	1	
-25	LS3859-3-28	BUSHING, plain (36659)	1	
-26	726834-3	SPRING, ammunition compartment cover latch mechanism hook	1	
-27	761979	RELEASE, ammunition compartment cover latch assy hook	1	
-28	MS21042L4	NUT (96906)	1	
-29	NAS222-32	SCREW (80205)	1	
-30	NAS43DD4-18	SPACER (80205)	2	
-31	726831-3	SPACER, latch	1	
	764927-3	HOOK ASSY, ammunition compartment cover	1	
-32	761978	HOOK, ammunition compartment cover latch mechanism	1	
-33	726830-3	BUSHING, cover	1	
-34	764928-501	HOUSING ASSY, latch mechanism	1	
-35	764926	GUIDE, ammunition compartment cover latch mechanism	1	
		Attaching Parts		
-36	NAS623-3-2	SCREW (80205)	1	
-37	NAS623-3-3	SCREW (80205)	1	
		*		
-38	786715-1	DECAL, electronic compartment cover caution	1	
	785219-101	ANTENNA INSTL, top UHF *(see fig. 200)*	1	
-39	NAS623-3-6	SCREW (80205)	8	
-40	784123-25	PIN ASSY, ammunition/fuel compartment cover latch	2	
-41	MS21042L08	NUT (96906)	1	
-42	792909-1	PIN, ammunition compartment cover latch	1	
-43	726833-3	BUSHING, cover latch pin	1	
-44	764722	BRACKET, ammunition compartment cover latch PIN	1	
-45	762099	PLATE, ammunition compartment cover adjusting	2	
-46	762100	SHIM, ammunition compartment cover latch mechanism	6	

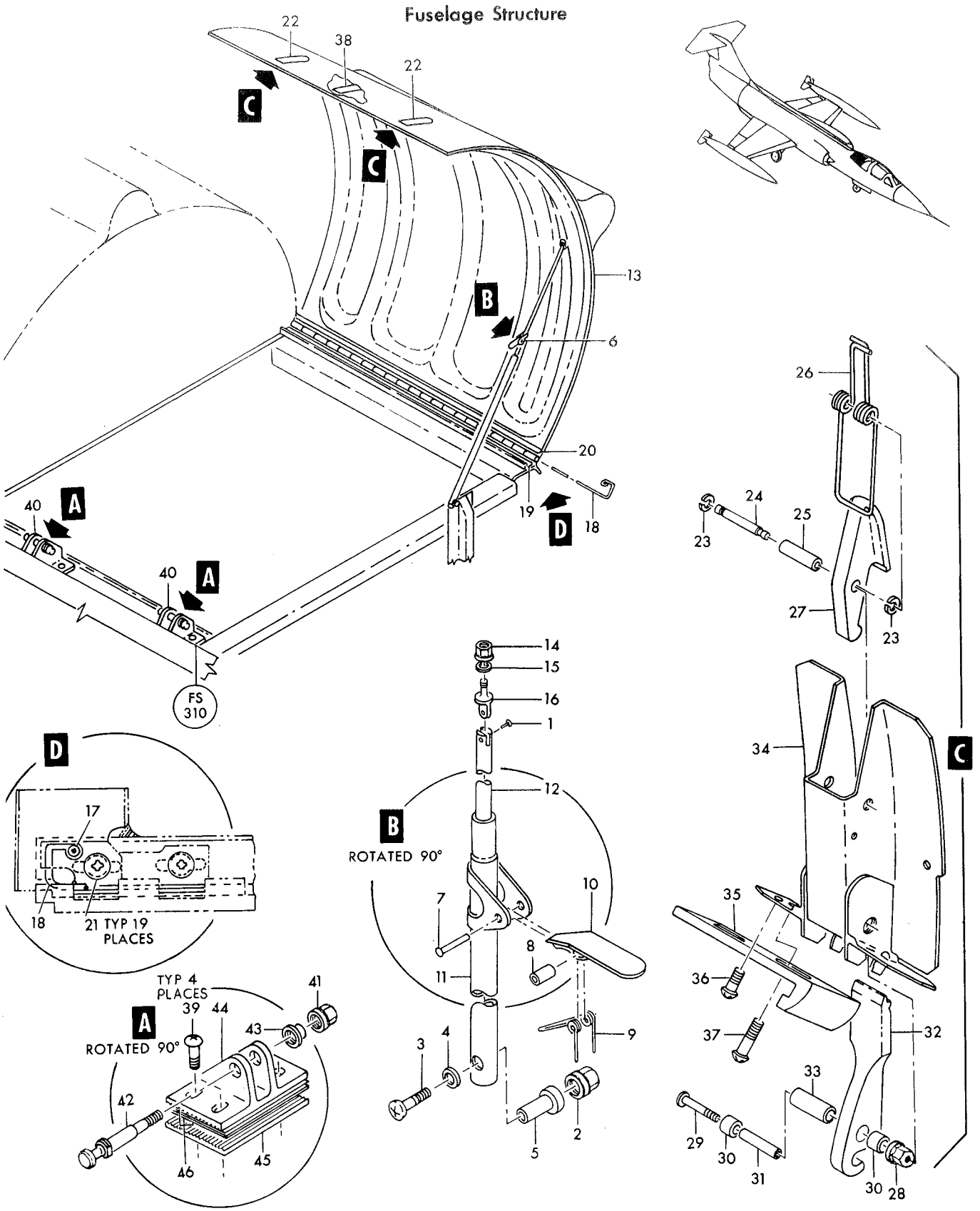

Figure 49—Ammunition/Fuel Compartment Cover

Figura e particolare	NDR	1 2 3 4 5 6 7 DENOMINAZIONE	Quant.	Codice applicab.
		RAM AIR TURBINE DOOR AND RELEASE MECHANISM		
50	784007-1	. TURBINE INSTL, ram air *(see fig. 114 for reqd)*	REF	
	784007-3	. . DOOR ASSY, ram air turbine	1	
- 1	761455-501	. . . DOOR ASSY, ram air turbine	1	
- 2	761455-13	. . . . DOOR, ram air turbine access	1	
		Attaching Parts		
	NAS1203-2	. . . . SCREW (80205)	10	
		——————☼——————		
- 3	MS27253-1	. . . . NAMEPLATE, identification and modification (96906)	1	
		Attaching Parts		
- 4	AN515-3R4	. . . . SCREW (88044)	4	
- 5	AN936A3	. . . . WASHER (88044)	4	
- 6	AN340-3	. . . . NUT (88044)	4	
- 7	761350	. . . ANGLE, ram air turbine support	1	
- 8	761321-501	B. . . SUPPORT ASSY, ram air turbine	1	
		Attaching Parts		
- 9	NAS1104-6	. . . BOLT (80205)	10	
		——————☼——————		
-10	726137-3	. . . . BUSHING, ram air support bracket	1	
-11	726138-3	. . . . BUSHING, ram air support bracket	1	
-12	AN178H22	. . BOLT (88044)	1	
-13	AN178H20	. . BOLT (88044)	1	
-14	726136-4	. . SPACER, ram air turbine	1	
-15	726136-3	. . SPACER, ram air turbine	1	
-16	AN960D816	. . WASHER (88044)	2	
-17	AN960-1016L	. . WASHER (shim) (88044)	2	
-18	NAS1021A8	. . NUT (80205)	2	
-19	0-3572	. . CYLINDER, ram air turbine actuating and damping (A0359) (alternate to 1602) (see AA9-0-3572-4)	1	
	1602	. . CYLINDER, ram air turbine actuating and damping (99895) (Lockheed spec dwg 668102-3) (see T.O. 9P2-3-24-3) (alternate to 0-3572)	REF	
		Partial Breakdown Follows		
-20	1543	. . . ROD END, ram air turbine cylinder (99895)	1	
-21	AN6232C1 1-2	. . . FELT (88044)	1	
-22	MS28782-10	. . . RING, back-up (96906)	1	
-23	AN6227B10	. . . PACKING (88044)	1	
-24	MS28783-1	. . . RING, back-up (96906)	1	
-25	AN6230-1	. . . GASKET (88044)	1	
-26	1541	. . . WASHER, piston rod end (99895)	1	
-27	MS28782-21	. . . RING, back-up (96906)	1	
-28	AN6227B21	. . . PACKING (88044)	1	
-29	1605	. . . SPRING, ram air turbine cylinder (99895)	1	
-30	1540	. . . LOCKNUT, ram air turbine cylinder (99895)	1	
-31	AN6290-2	. . . GASKET (88044)	1	
-32	1544	. . . NAMEPLATE, ram air turbine cylinder (99895)	1	
-33	NAS1104-44	. . BOLT (80205)	1	
-34	NAS1104-16	. . BOLT (80205)	1	
	AN960D416	. . WASHER (88044)	4	
	MS21042L4	. . NUT (96906)	2	
-35	761775	. . CLEVIS, ram air turbine latch	1	
-36	AN960D616	. . WASHER (88044)	1	
-37	777601-1	. . SPRING, ram air turbine latch adjustment clevis flat	1	
-38	777601-3	. . SPRING, ram air turbine latch adjustment clevis flat	1	
-39	NAS43DD4-36	. . SPACER (80205)	1	
-40	MS20500-428	. . NUT (96906)	1	
-41	AN24-13	. . BOLT (88044)	1	
-42	AN960D416	. . WASHER (88044)	1	
-43	AN320-4	. . NUT (88044)	1	
-44	MS24665-134	. . COTTER PIN (96906)	1	
-45	765489-1	. . LATCH, ram air turbine release *(see fig. 89)*	1	

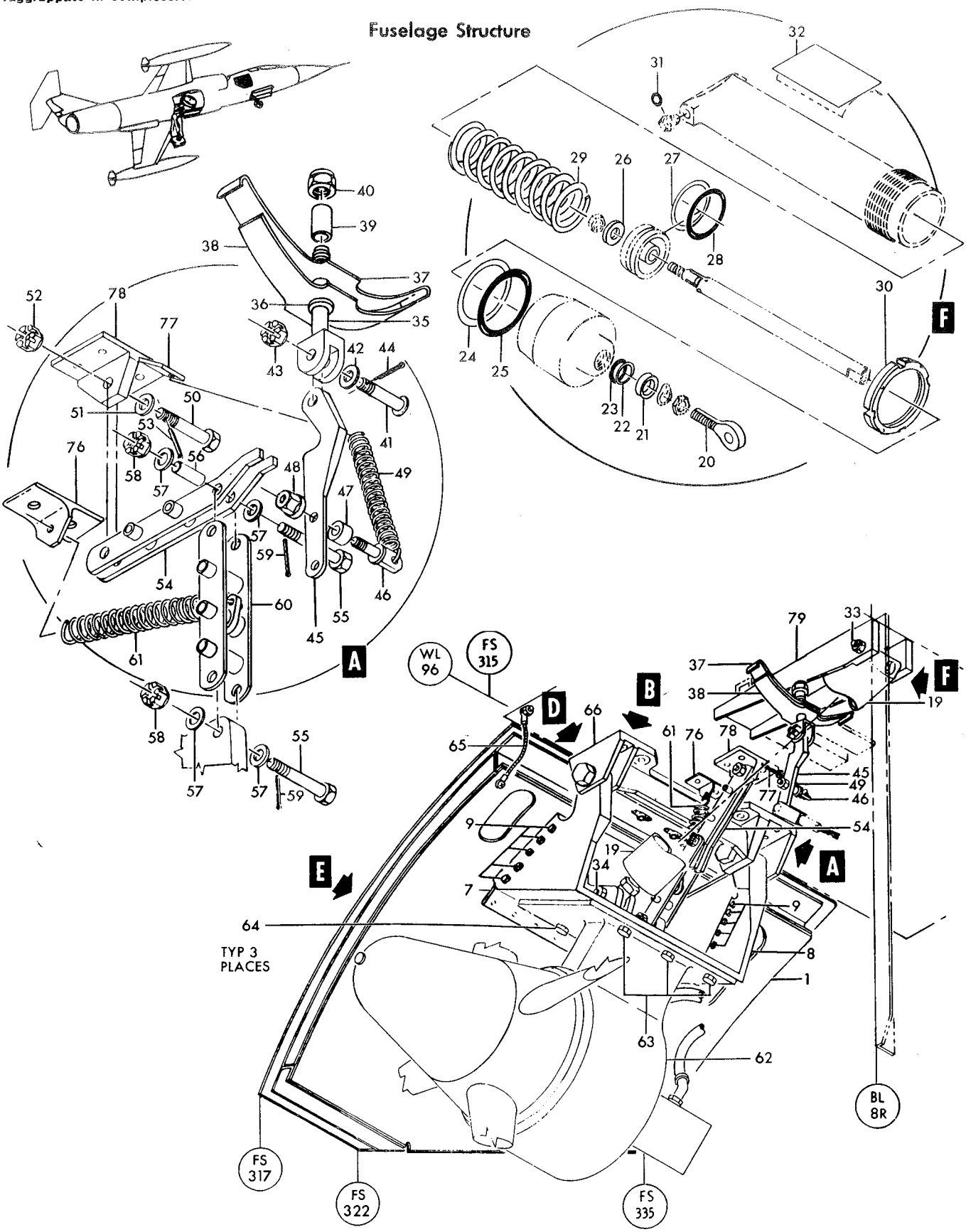

Figure 50—Ram Air Turbine Door and Release Mechanism (Sheet 1 of 2)

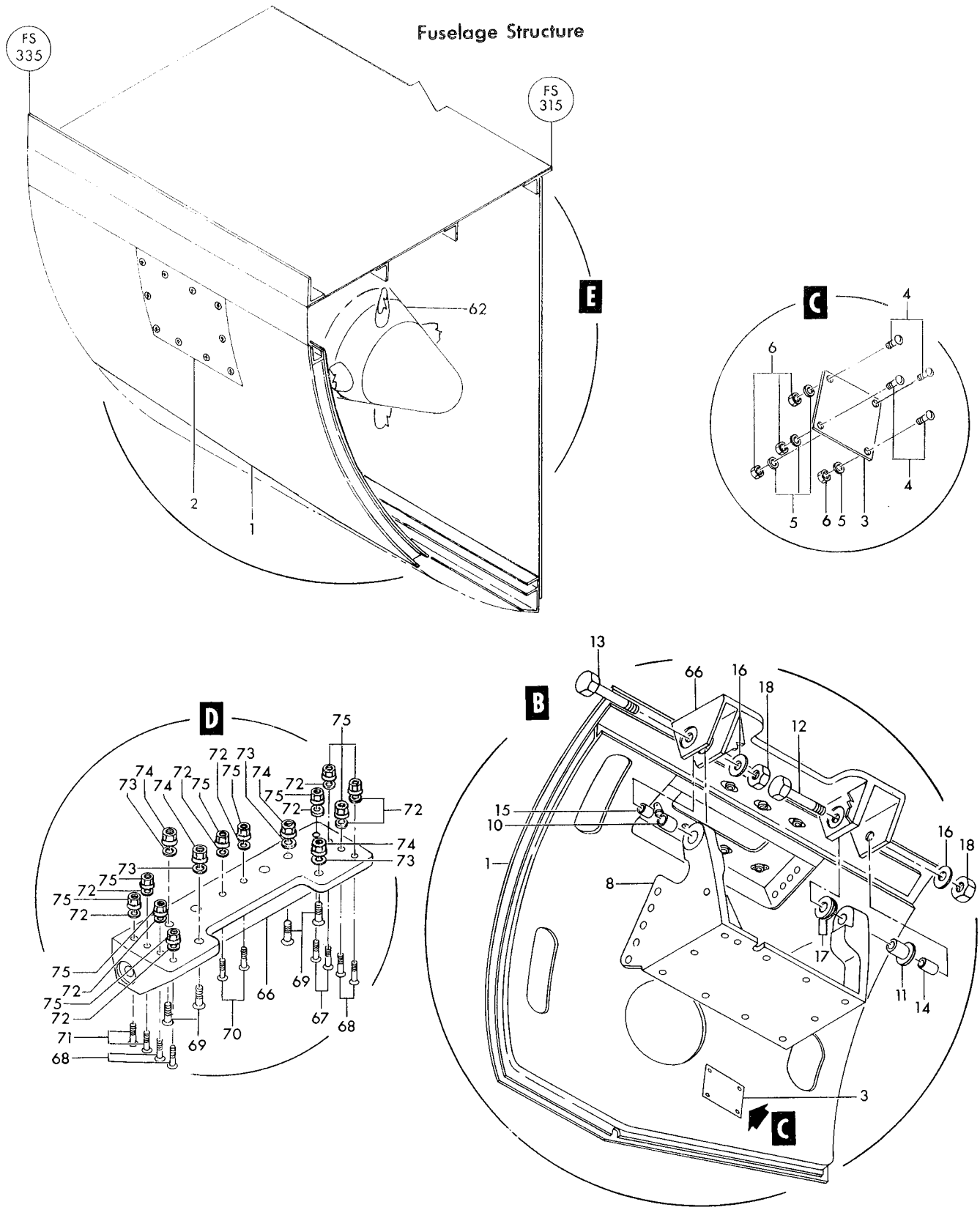

Figure 50—Ram Air Turbine Door and Release Mechanism (Sheet 2 of 2)

Figura e particolare	NDR	1 2 3 4 5 6 7	DENOMINAZIONE	Quant.	Codice applicab.
50-46	AN42B6A	. .	BOLT (88044)	1	
-47	NAS42DD6-20	. .	SPACER (80205)	1	
-48	MS21042L3	. .	NUT (96906)	1	
-49	726105-3	. .	SPRING, ram air turbine latch tension	1	
-50	NAS1104-8D	. .	BOLT (80205)	1	
-51	AN960D416	. .	WASHER (88044)	1	
-52	AN320-4	. .	NUT (88044)	1	
-53	MS24665-134	. .	COTTER PIN (96906)	1	
-54	761716	. .	LINK ASSY, ram air turbine lock	1	
-55	NAS1104-12D	. .	BOLT (80205)	2	
-56	731825-1	. .	ROLLER, ram air turbine latch	1	
-57	AN960D416	. .	WASHER (88044)	4	
-58	AN320-4	. .	NUT (88044)	2	
-59	MS24665-134	. .	COTTER PIN (96906)	2	
-60	761717	. .	LINK ASSY, ram air turbine	1	
-61	726104-3	. .	SPRING, ram air turbine linkage tension	1	
-62	6506700	A. .	AUXILIARY SET, (G1) ram air turbine generator and pump (A1620) (05151) (Lockheed spec dwg 668442-5) (see T.O. 9H7-3-11-4) *(see fig. 127)*	1	
			Attaching parts		
-63	NAS1104-20	. .	BOLT (80205)	3	
-64	NAS1104-18	. .	BOLT (80205)	3	
	AN960D416	. .	WASHER (88044)	6	
	MS21042L4	. .	NUT (96906)	6	
-65	MS25083-1BB5	. .	JUMPER (96906)	1	
			Attaching Parts		
	NAS517-3-2	. .	SCREW (80205)	1	
	NAS623-3-3	. .	SCREW (80205)	1	
	MS21042L3	. .	NUT (96906)	2	
	761379-501	.	STRUCTURE INSTL, RH fus sta 315 to 335 floor *(see fig. 38 for reqd)* . .	REF	
-66	761750	. .	HINGE, ram air turbine door	1	
			Attaching Parts		
-67	NAS517-3-8	. .	SCREW (80205)	2	
-68	NAS623-3-8	. .	SCREW (80205)	4	
-69	NAS623-4-10	. .	SCREW (80205)	4	
-70	NAS623-3-5	. .	SCREW (80205)	2	
-71	NAS1203-8	. .	SCREW (80205)	2	
-72	AN960D10	. .	WASHER (88044)	10	
-73	AN960D416	. .	WASHER (88044)	4	
-74	MS21042L4	. .	NUT (96906)	4	
-75	MS21042L3	. .	NUT (96906)	10	
-76	761990	. .	CLIP, ram air turbine linkage lock	1	
			Attaching Parts		
	NAS221-11	. .	SCREW (80205)	2	
	AN960D10	. .	WASHER (88044)	2	
	MS21042L3	. .	NUT (96906)	2	
-77	765488-1	. .	CLIP, ram air turbine latch spring	1	
-78	761747	. .	BRACKET, ram air turbine door support link	1	
			Attaching Parts		
	NAS221-11	. .	SCREW (80205)	4	
	AN960D10	. .	WASHER (88044)	4	
	MS21042L3	. .	NUT (96906)	4	
-79	761746	. .	FITTING, ram air turbine actuator	1	

Figura e particolare	NDR	1 2 3 4 5 6 7 DENOMINAZIONE	Quant.	Codice applicab.
		Attaching Parts		
50	NAS221-12	SCREW (80205)	9	
	NAS221-15	SCREW (80205)	2	
	AN960D10	WASHER (88044)	11	
	MS21042L3	NUT (96906)	11	

A - Modified per AA.1F-104-OT-787
B - Modified per AA.1F-104S-OT-159

Figura e particolare	NDR	DENOMINAZIONE 1 2 3 4 5 6 7	Quant.	Codice applicab.
		ENGINE AIR INTAKE DUCT		
51	850016-101	SCOOP INSTL, engine air LH *(see fig. 31 for reqd)*	REF	
	850016-102	SCOOP INSTL, engine air RH *(see fig. 31 for reqd)*	REF	
- 1	850189-101	ACTUATOR INSTL, aux inlet door LH *(see fig. 52)*	1	
	850189-102	ACTUATOR INSTL, aux inlet door RH *(see fig. 52)*	1	
- 2	849130-101	SCOOP ASSY, (HR12) engine air anti-icing	1	
	849130-102	SCOOP ASSY, (HR13) engine air anti-icing	1	
	850016-103	SCOOP ASSY, LH engine air	1	
	850016-104	SCOOP ASSY, RH engine air	1	
- 3	850216-103	FITTING INSTL, aux air inlet door LH *(see fig. 52)*	1	
	850216-104	FITTING INSTL, aux air inlet door RH *(see fig. 52)*	1	
	850231-101	SKIN INSTL, engine air scoop LH	1	
	850231-102	SKIN INSTL, engine air scoop RH	1	
- 4	850231-103	SKIN, engine air scoop LH	1	
	850231-104	SKIN, engine air scoop (RH	1	
		Attaching Parts		
- 5	NAS1203-1	SCREW (80205)	1	
- 6	NAS1203-3	SCREW (80205)	73	
- 7	NAS1203-6	SCREW (80205)	15	
		———————☼———————		
- 8	850231-105	SKIN, engine air scoop LH	1	
	850231-106	SKIN, engine air scoop RH	1	
		Attaching Parts		
- 9	NAS1203-2	SCREW (80205)	1	
-10	NAS1203-3	SCREW (80205)	32	
-11	NAS1203-6	SCREW (80205)	20	
-12	NAS1203-7	SCREW (80205)	6	
		———————☼———————		
-13	849256-101	DOOR INSTL, aux air inlet LH *(see fig. 52)*	1	
	849256-102	DOOR INSTL, aux air inlet RH *(see fig. 52)*	1	
	763831L	RING INSTL, fuselage station 376 engine air scoop	1	
	763831R	RING INSTL, fuselage station 376 engine air scoop	1	
-14	763831-3L	RING ASSY, engine air scoop	1	
	763831-3R	RING ASSY, engine air scoop	1	
-15	763766L	FITTING, engine air scoop ring lower	1	
	763766R	FITTING, engine air scoop ring lower	1	
-16	763767L	FITTING, engine air scoop ring upper	1	
	763767R	FITTING, engine air scoop ring upper	1	
	763831-6L	SEGMENT ASSY, engine air scoop	1	
	763831-6R	SEGMENT ASSY, engine air scoop	1	
-17	763768L	FITTING, engine air scoop segment lower	1	
	763768R	FITTING, engine air scoop segment lower	1	
-18	763769L	FITTING, engine air scoop segment lower	1	
	763769R	FITTING, engine air scoop segment lower	1	
-19	849920-101	ELECTRICAL INSTL, LH duct anti-icing *(see fig. 191)*	1	
	849920-103	ELECTRICAL INSTL, RH duct anti-icing *(see fig. 191)*	1	
	761397-101	SCOOP INSTL, forward fuselage station 376	1	
	761397-102	SCOOP INSTL, forward fuselage station 376	1	
	761397-103	SCOOP ASSY, forward fuselage station 376	1	
	761397-104	SCOOP ASSY, forward fuselage station 376	1	
-20	763827-3L	SKIN, fuselage station 358 to 370 engine bleed air duct	1	
-21	763827-3R	SKIN, fuselage station 358 to 370 engine bleed air duct	1	
		Attaching Parts		
-22	NAS517-3-3	SCREW (80205)	24	
-23	NAS517-3-6	SCREW (80205)	58	
		———————☼———————		
-24	850189-103	LATCH DOOR INSTL, aux air inlet *(see fig. 52)*	1	
	850189-104	LATCH DOOR INSTL, aux air inlet *(see fig. 52)*	1	
-25	850147-101	STRUCTURE INSTL, aux air inlet door guide LH *(see fig. 52)*	1	
	850147-102	STRUCTURE INSTL, aux air inlet door guide RH *(see fig. 52)*	1	

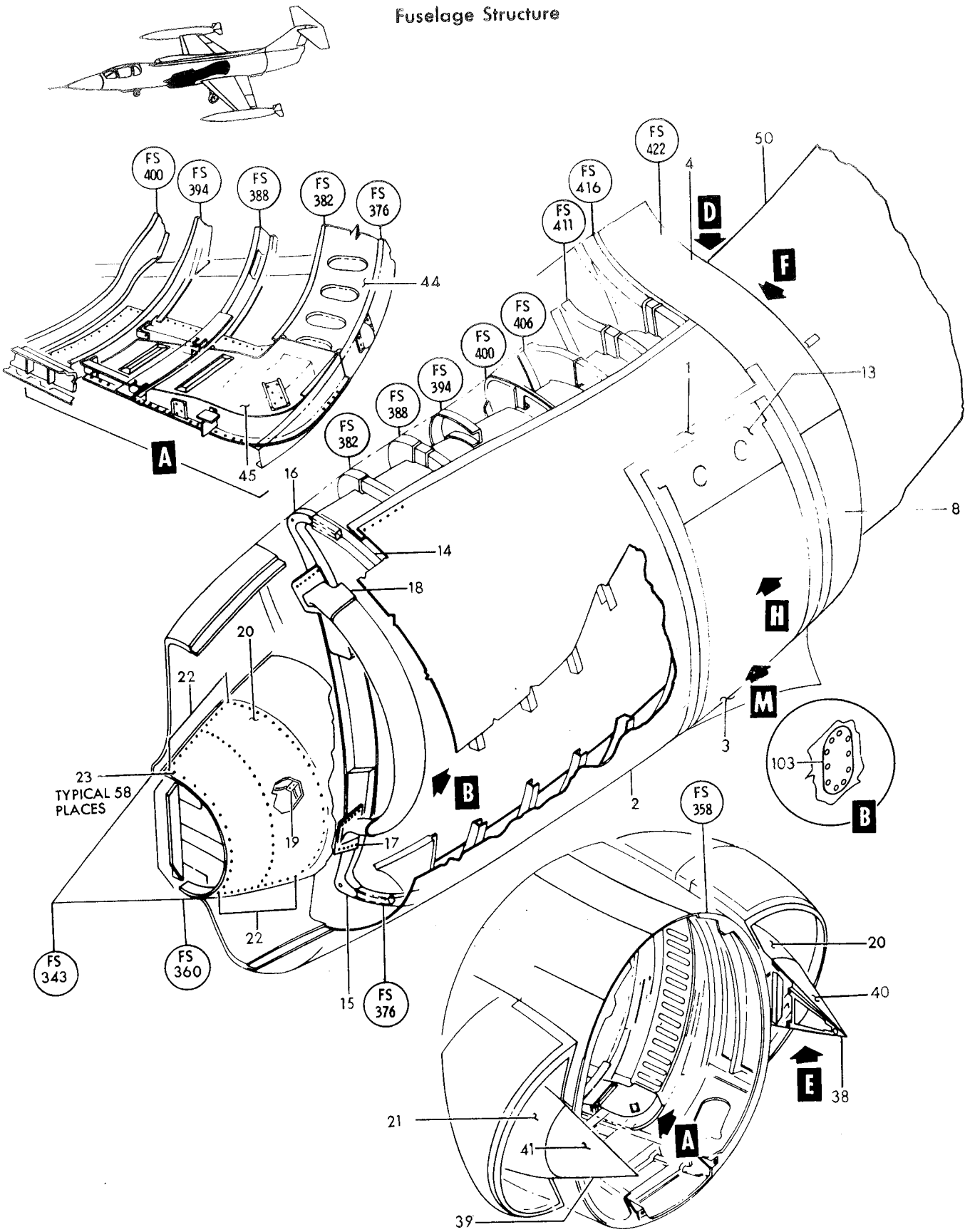

Figure 51 — Engine Air Intake Duct (Sheet 1 of 4)

Fuselage Structure

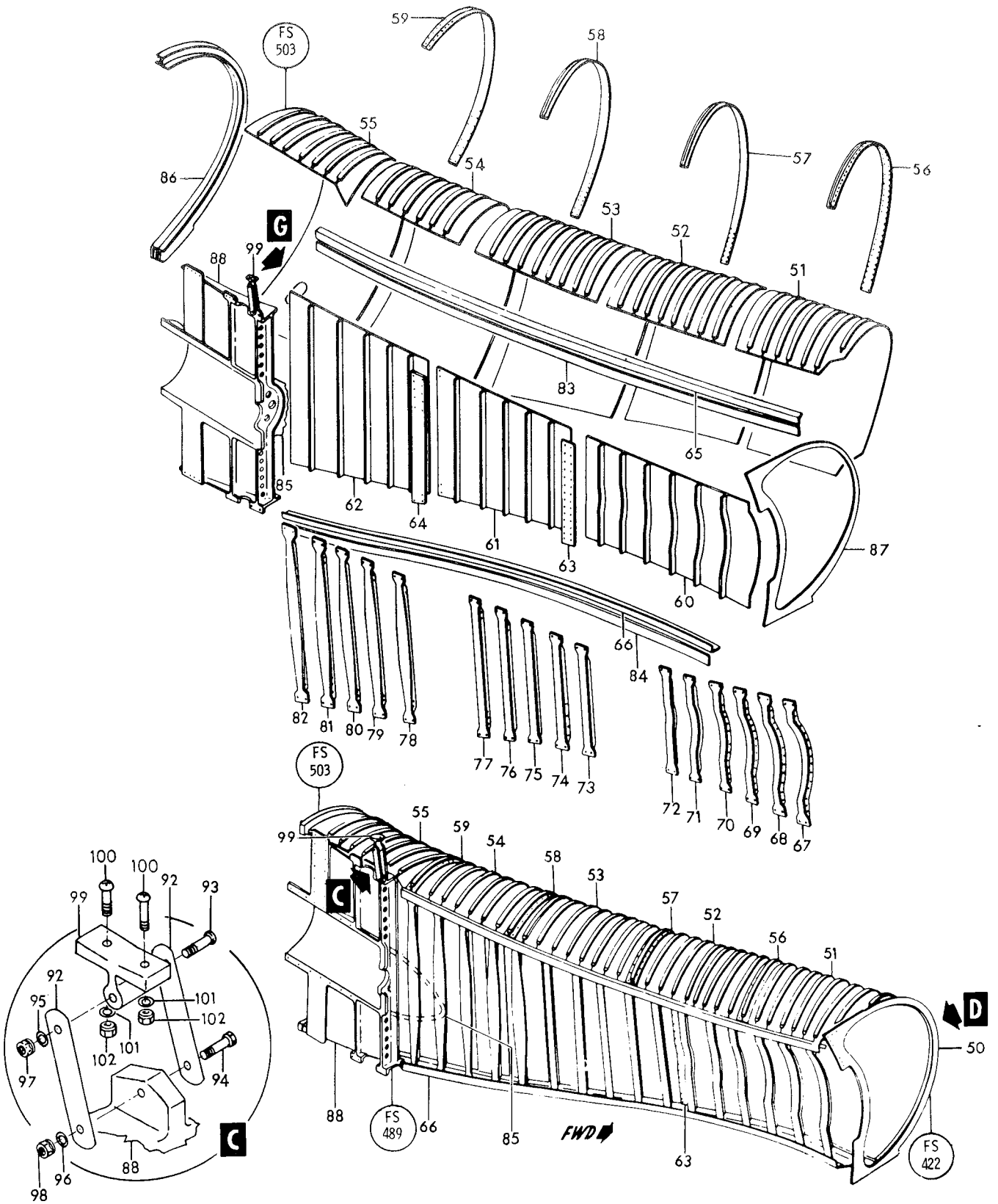

Figure 51—Engine Air Intake Duct (Sheet 2 of 4)

Fuselage Structure

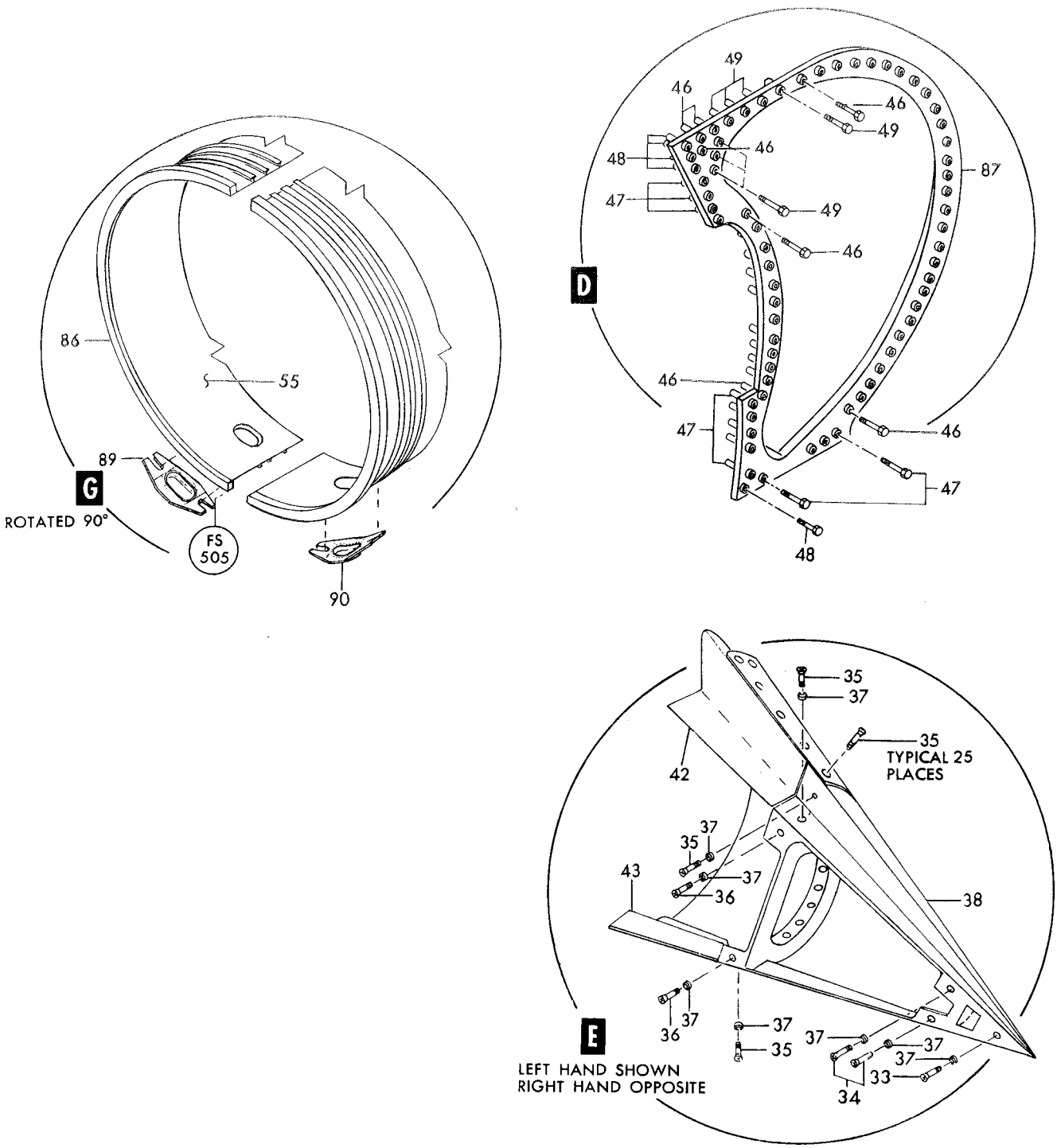

Figure 51 – Engine Air Intake Duct (Sheet 3 of 4)

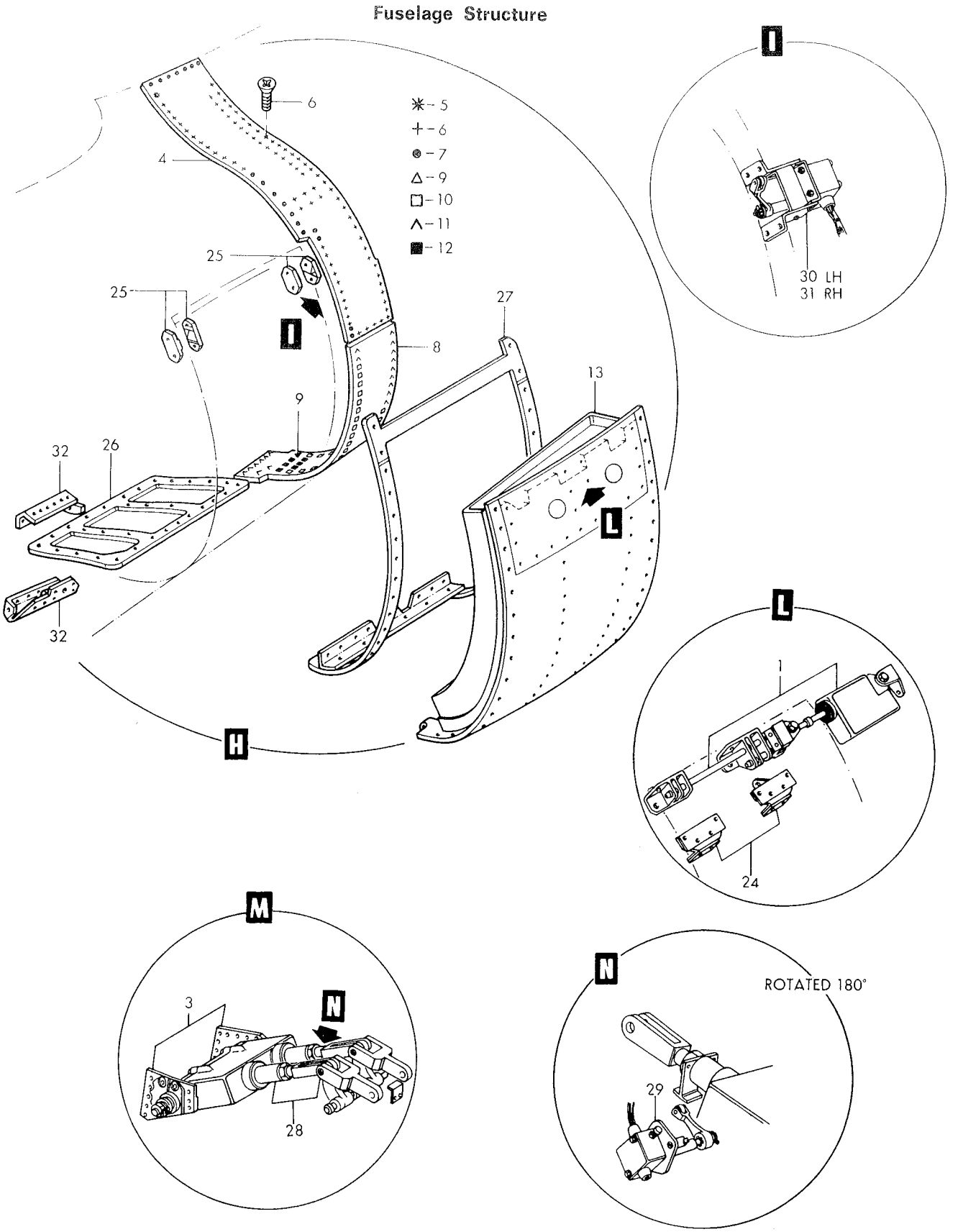

Figure 51-Engine Air Intake Duct (Sheet 4 of 4)

Figura e particolare	NDR	1 2 3 4 5 6 7 DENOMINAZIONE	Quant.	Codice applicab.
51-26	850234-101	DOOR INSTL, fuselage station 400 to 416 lower access LH *(see fig. 52)*	1	
	850234-102	DOOR INSTL, fuselage station 400 to 416 lower access RH *(see fig. 52)*	1	
-27	850159-101	SEAL INSTL, auxiliary air inlet door LH *(see fig. 52)*	1	
	850159-102	SEAL INSTL, auxiliary air inlet door RH *(see fig. 52)*	1	
-28	850216-101	ACTUATOR INSTL, aux air inlet door LH *(see fig. 52)*	1	
	850216-102	ACTUATOR INSTL, aux air inlet door RH *(see fig. 52)*	1	
-29	850060-101	SENSING SWITCH INSTL, aux inlet open door LH *(see fig. 52)*	1	
	850060-103	SENSING SWITCH INSTL, aux inlet open door RH *(see fig. 52)*	1	
-30	850058-101	SENSING SWITCH INSTL, aux air inlet left hand side closed door *(see fig. 52)*	1	
-31	850059-101	SENSING SWITCH INSTL, aux air inlet right hand side closed door *(see fig. 52)*	1	
-32	850454-101	SEAL INSTL, actuator bay LH *(see fig. 52)*	1	
	850454-102	SEAL INSTL, actuator bay RH *(see fig. 52)*	1	
	761397-115	CONE INSTL, forward fuselage station 376 LH (NHA 849138-101)	1	
	761397-116	CONE INSTL, forward fuselage station 376 RH (NHA 849138-101)	1	
	785764-3	CONE ASSY, (HR3) LH engine air scoop anti-icing	1	
	785764-4	CONE ASSY, (HR5) RH engine air scoop anti-icing	1	
		Attaching Parts		
-33	LS575-3-8	BOLT, internal hexagonal head (36659)	1	
-34	LS575-3-11	BOLT, internal hexagonal head (36659)	2	
-35	NAS517-3-3	SCREW (80205)	28	
-36	LS575-3-11	BOLT, internal hexagonal head (36659)	2	
-37	AN960D10	WASHER (88044)	8	
		*		
	761397-51	CONE ASSY, forward fuselage station 376	1	
	761397-52	CONE ASSY, forward fuselage station 376	1	
-38	761448L	TIP ASSY, BLC duct forward	1	
-39	761448R	TIP ASSY, BLC duct forward	1	
-40	761397-20L	SKIN, forward fuselage station 376	1	
-41	761397-20R	SKIN, forward fuselage station 376	1	
	762551L	SUPPORT ASSY, engine air scoop upper cone	1	
	762551R	SUPPORT ASSY, engine air scoop upper cone	1	
-42	762551-3L	ZEE, engine air scoop upper cone	1	
	762551-3R	ZEE, engine air scoop upper cone	1	
	762535L	SUPPORT ASSY, engine air scoop lower cone	1	
	762535R	SUPPORT ASSY, engine air scoop lower cone	1	
-43	762535-3L	ZEE, engine air scoop lower cone	1	
	762535-3R	ZEE, engine air scoop lower cone	1	
	770575-101	DUCT INSTL, BLC bleed air outlet LH *(see fig. 40 for reqd)*	REF	
	770575-102	DUCT INSTL, BLC bleed air outlet RH *(see fig. 40 for reqd)*	REF	
-44	760075-63	COVER ASSY, LH BLC bleed air	1	
	760075-64	COVER ASSY, RH BLC bleed air	1	
	770576-1	HOUSING ASSY, BLC bleed air outlet	1	
	770576-2	HOUSING ASSY, BLC bleed air outlet	1	
-45	770576-3	PAN, BLC bleed air outlet	1	
	770576-4	PAN, BLC bleed air outlet	1	
	760219-117	DUCT INSTL, engine air LH *(see fig. 31 for reqd)*	REF	
	760219-118	DUCT INSTL, engine air RH *(see fig. 31 for reqd)*	REF	
-46	LS575-3-9	BOLT, internal hexagonal head (36659)	36	
-47	LS575-3-10	BOLT, internal hexagonal head (36659)	20	
-48	LS575-3-11	BOLT, internal hexagonal head (36659)	5	
-49	LS575-3-12	BOLT, internal hexagonal head (36659)	7	
-50	760219-93	DUCT ASSY, engine air LH	1	
	760219-94	DUCT ASSY, engine air RH	1	
	760219-95	SKIN ASSY, engine air duct LH	1	
	760219-96	SKIN ASSY, engine air duct RH	1	
-51	760219-6L	SKIN, air duct	1	

Figura e particolare	NDR	DENOMINAZIONE	Quant.	Codice applicab.
51	760219-6R	SKIN, air duct	1	
-52	760219-7L	SKIN, air duct	1	
	760219-7R	SKIN, air duct	1	
-53	760219-41L	SKIN, air duct	1	
	760219-41R	SKIN, air duct	1	
-54	760219-8L	SKIN, air duct	1	
	760219-8R	SKIN, air duct	1	
-55	760219-103	SKIN, LH air duct	1	
	760219-104	SKIN, RH air duct	1	
-56	760219-109	SPLICE, LH air duct	1	
	760219-110	SPLICE, RH air duct	1	
-57	760219-111	SPLICE, LH air duct	1	
	760219-112	SPLICE, RH air duct	1	
-58	760219-113	SPLICE, LH air duct	1	
	760219-114	SPLICE, RH air duct	1	
-59	760219-115	SPLICE, LH air duct	1	
	760219-116	SPLICE, RH air duct	1	
	760219-97	BACK ASSY, engine air duct LH	1	
	760219-98	BACK ASSY, engine air duct RH	1	
-60	760219-107	SKIN, LH air duct	1	
	760219-108	SKIN, RH air duct	1	
-61	760219-99	SKIN, LH air duct	1	
	760219-100	SKIN, RH air duct	1	
-62	760219-101	SKIN, LH air duct	1	
	760219-102	SKIN, RH air duct	1	
-63	760219-31L	SPLICE, air duct	1	
	760219-31R	SPLICE, air duct	1	
-64	760219-32	SPLICE, air duct	1	
-65	760219-36L	ANGLE, air duct	1	
	760219-36R	ANGLE, air duct	1	
-66	760219-37L	ANGLE, air duct	1	
	760219-37R	ANGLE, air duct	1	
-67	760219-13L	TEE, air duct back	1	
	760219-13R	TEE, air duct back	1	
-68	760219-14L	TEE, air duct back	1	
	760219-14R	TEE, air duct back	1	
-69	760219-15L	TEE, air duct back	1	
	760219-15R	TEE, air duct back	1	
-70	760219-16L	TEE, air duct back	1	
	760219-16R	TEE, air duct back	1	
-71	760219-17L	TEE, air duct back	1	
	760219-17R	TEE, air duct back	1	
-72	760219-18L	TEE, air duct back	1	
	760219-18R	TEE, air duct back	1	
-73	760219-19L	TEE, air duct back	1	
	760219-19R	TEE, air duct back	1	
-74	760219-20L	TEE, air duct back	1	
	760219-20R	TEE, air duct back	1	
-75	760219-21L	TEE, air duct back	1	
	760219-21R	TEE, air duct back	1	
-76	760219-22L	TEE, air duct back	1	
	760219-22R	TEE, air duct back	1	
-77	760219-23L	TEE, air duct back	1	
	760219-23R	TEE, air duct back	1	
-78	760219-24L	TEE, air duct back	1	
	760219-24R	TEE, air duct back	1	
-79	760219-25L	TEE, air duct back	1	
	760219-25R	TEE, air duct back	1	
-80	760219-26L	TEE, air duct back	1	
	760219-26R	TEE, air duct back	1	

Figura e particolare	NDR	DENOMINAZIONE	Quant.	Codice applicab.
51-81	760219-27L	TEE, air duct back	1	
	760219-27R	TEE, air duct back	1	
-82	760219-28L	TEE, air duct back	1	
	760219-28R	TEE, air duct back	1	
-83	760219-59	FAIRING ASSY, engine air duct LH	1	
	760219-60	FAIRING ASSY, engine air duct RH	1	
-84	760219-61	FAIRING ASSY, engine air duct LH	1	
	760219-62	FAIRING ASSY, engine air duct RH	1	
-85	760219-63	FAIRING ASSY, engine air duct *(see fig. 53)*	1	
	760219-64	FAIRING ASSY, engine air duct *(see fig. 53)*	1	
-86	763173-501	RING ASSY, LH frame support	1	
	763173-502	RING ASSY, RH frame support	1	
-87	760073-29L	RING ASSY, fuselage station 422 bulkhead	1	
	760073-29R	RING ASSY, fuselage station 422 bulkhead	1	
-88	774234-1	HOUSING, LH engine air duct starter (match comp do not stk sep) *(see fig. 53)*	1	
	774234-2	HOUSING, RH engine air duct starter (match comp do not stk sep) *(see fig. 53)*	1	
	784341-15	SUPPORT INSTL, generator and alternator cooling duct LH	1	
-89	784347-1	SUPPORT, generator and alternator cooling duct LH *(see fig. 253)*	1	
	784341-13	SUPPORT INSTL, generator and alternator cooling duct RH	1	
-90	763702R	SUPPORT, generator and alternator cooling duct RH *(see fig. 253)*	1	
	764361-7	TANK ATTACHMENT INSTL, main aft fuel LH starter housing *(see fig. 108)*	1	
	764361-8	TANK ATTACHMENT INSTL, main aft fuel RH starter housing *(see fig. 108)*	1	
	760219-77	FASTENER INSTL, engine air duct *(see fig. 31 for reqd)*	REF	
-92	760219-40	STRAP, engine air duct	2	
		Attaching Parts		
-93	NAS623-4-20	SCREW (80205)	1	
-94	NAS1105-20D	BOLT (80205)	1	
-95	AN960D416	WASHER (88044)	1	
-96	AN960-516	WASHER (88044)	1	
-97	MS21042L4	NUT (96906)	1	
-98	MS21042L5	NUT (96906)	1	
		*		
-99	760972	HANGER, engine air duct attachment	1	
		Attaching Parts		
-100	NAS623-4-12	SCREW (80205)	2	
-101	AN960D416	WASHER (88044)	2	
-102	MS21042L4	NUT (96906)	2	
		*		
-103	760075-49	DOOR, bleed air duct service *(see fig. 40 for reqd)*	REF	

Figura e particolare	NDR	1 2 3 4 5 6 7	DENOMINAZIONE	Quant.	Codice applicab.
			AUXILIARY AIR INLET ACCESS DOOR AND SENSING SWITCH INSTL		
52	850189-101	.	ACTUATOR INSTL, aux inlet door LH *(see fig. 51 for reqd)*	REF	
	850189-102	.	ACTUATOR INSTL, aux inlet door RH *(see fig. 51 for reqd)*	REF	
- 1	850186-101	.	FITTING ASSY, LH	1	
	850186-102	. .	FITTING ASSY, RH	1	
			Attaching Parts		
- 2	NAS1154-11	. .	SCREW (80205)	1	
- 3	NAS1153-2	. .	SCREW (80205)	1	
- 4	1107T100-7	. .	ACTUATOR, (B68) electro-mechanical (A2898) (98889) (Lockheed spec dwg 670977-107) (For spare replacement use 1107T100-9) *(see fig. 192 and 194)*	1	
	1107T100-9	A. .	ACTUATOR, (B68) electro-mechanical (A2898) (98889) (Lockheed spec dwg 670977-109) (Spare replacement for 1107T100-7) *(see fig. 192 and 194)*	1	
- 5	850183-101	A. .	SEAL, door latch actuator	1	
- 6	HF4CL2	A. .	ROD END (73134)	1	
			Attaching Parts		
- 7	NAS623-4-15	A. .	SCREW (80205)	1	
- 8	NAS1104-10D	A. .	BOLT (80205)	1	
- 9	AN320-4	A. .	NUT (88044)	1	
-10	MS24665-134	A. .	COTTER PIN (96906)	1	
	850189-103	.	LATCH DOOR INSTL, aux air inlet *(see fig. 51 for reqd)*	REF	
	850189-104	.	LATCH DOOR INSTL, aux air inlet *(see fig. 51 for reqd)*	REF	
-11	851361-101	. .	FITTING, fuselage station 411 aux door latch LH	1	
	851361-102	. .	FITTING, fuselage station 411 aux door latch RH	1	
-12	851362-101	. .	FITTING, fuselage station 406 aux door latch LH	1	
	851362-102	. .	FITTING, fuselage station 406 aux door latch RH	1	
-13	850182-101	. .	SHIM, auxiliary door latch fitting	AR	
-14	850266-101	. .	SHIM, auxiliary door latch fitting	AR	
			Attaching Parts		
-15	NAS1153-5	. .	SCREW (80205)	4	
-16	NAS1153-7	. .	SCREW (80205)	4	
-17	NAS623-3-5	. .	SCREW (80205)	4	
-18	AN960-10L	. .	WASHER (88044)	AR	
	849256-101	.	DOOR INSTL, aux air inlet LH *(see fig. 51 for reqd)*	REF	
	849256-102	.	DOOR INSTL, aux air inlet RH *(see fig. 51 for reqd)*	REF	
-19	849256-103	. .	DOOR ASSY, aux air inlet	1	
	849256-104	. .	DOOR ASSY, aux air inlet	1	
			Attaching Parts		
-20	NAS1204-4	. .	SCREW (80205)	2	
-20A	NAS1204-3	. .	SCREW (80205)	2	
-21	NAS1204-7	. .	SCREW (80205)	14	
-21A	NAS1204-5	. .	SCREW (80205)	4	
-22	NAS1204-6	. .	SCREW (80205)	2	
-23	NAS1204-9	. .	SCREW (80205)	2	
-23A	AN960D10	. .	WASHER (88044)	6	
-23B	MS21042L4	. .	NUT (96906)	10	
-24	849264-101	. . .	SKIN, upper LH	1	
	849264-102	. . .	SKIN, upper RH	1	
-25	849259-101	. . .	SKIN, outer LH	1	
	849259-102	. . .	SKIN, outer RH	1	
-26	851125-101	. . .	SHIM	1	
	849265-101	. . .	HINGE ASSY, aux air inlet door LH	1	
	849265-102	. . .	HINGE ASSY, aux air inlet door RH	1	
			Attaching Parts		
-27	NAS1203-6	. . .	SCREW (80205)	8	
-28	NAS1203-3	. . .	SCREW (80205)	22	
-29	NAS623-3-4	. . .	SCREW (80205)	10	

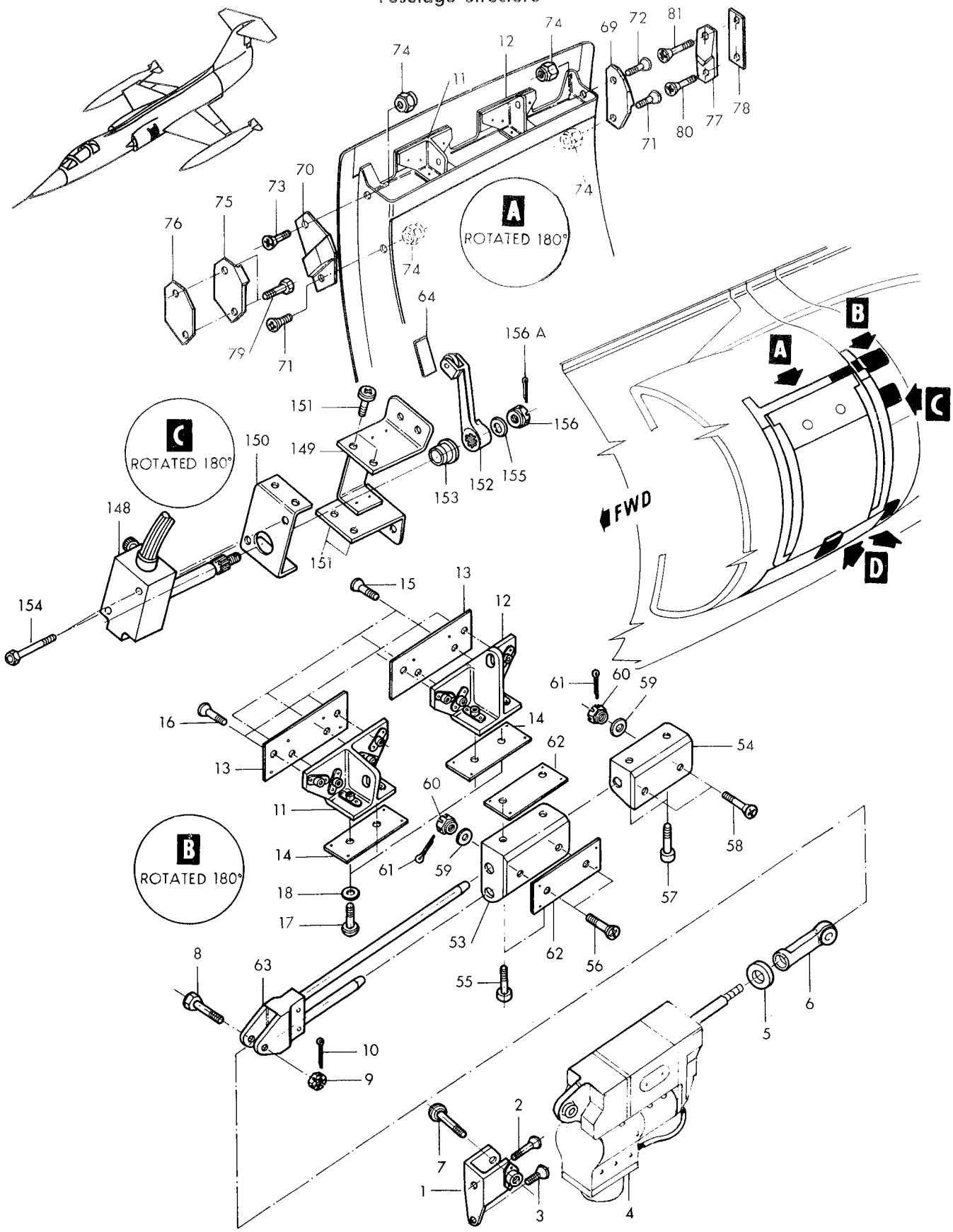

Figure 52–Engine Air Intake Duct Access Door and Hinge Cover (Sheet 1 of 3)

Fuselage Structure

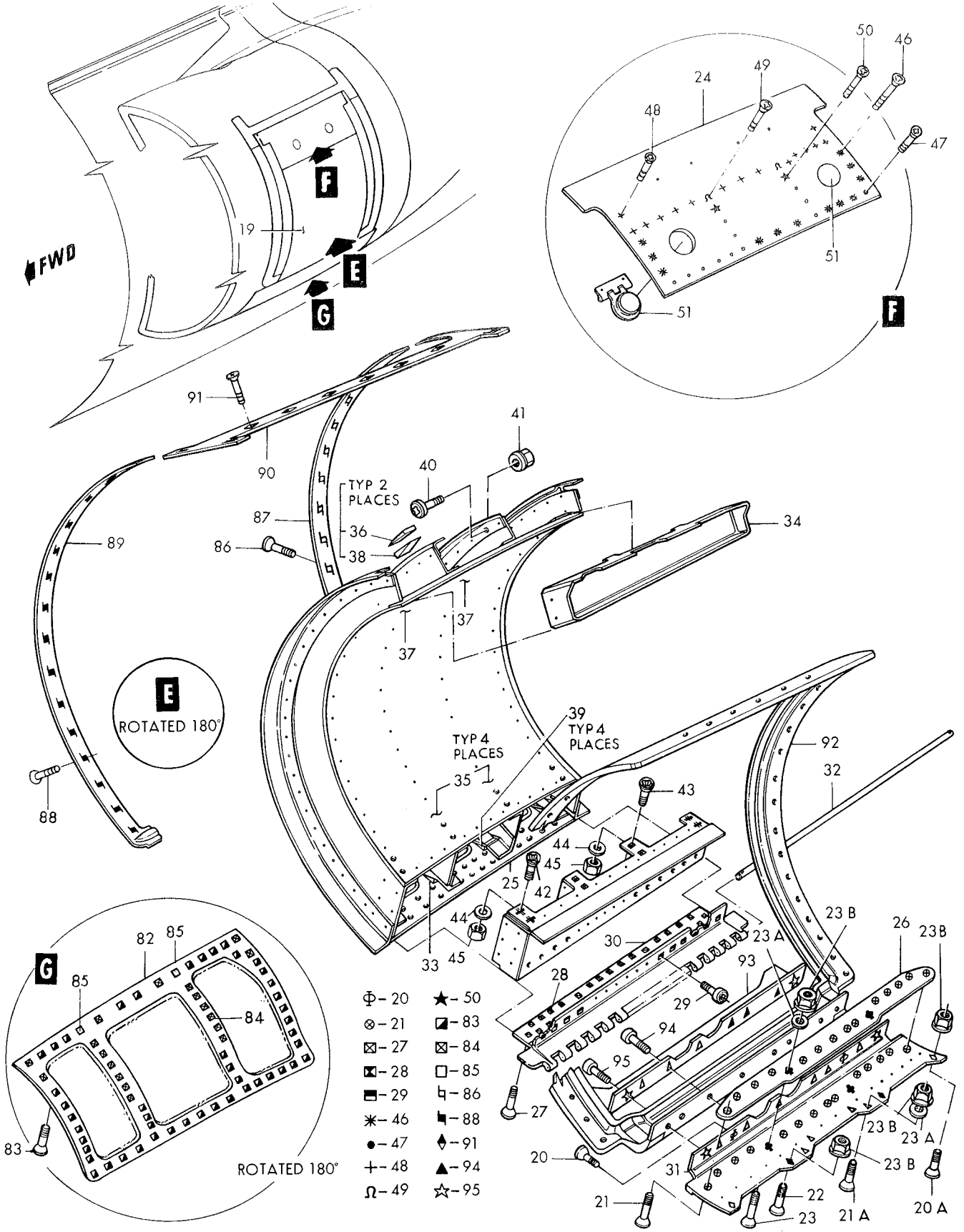

Figure 52–Engine Air Intake Duct Access Door and Hinge Cover (Sheet 2 of 3)

AA.1F-F104S-4

Fuselage Structure

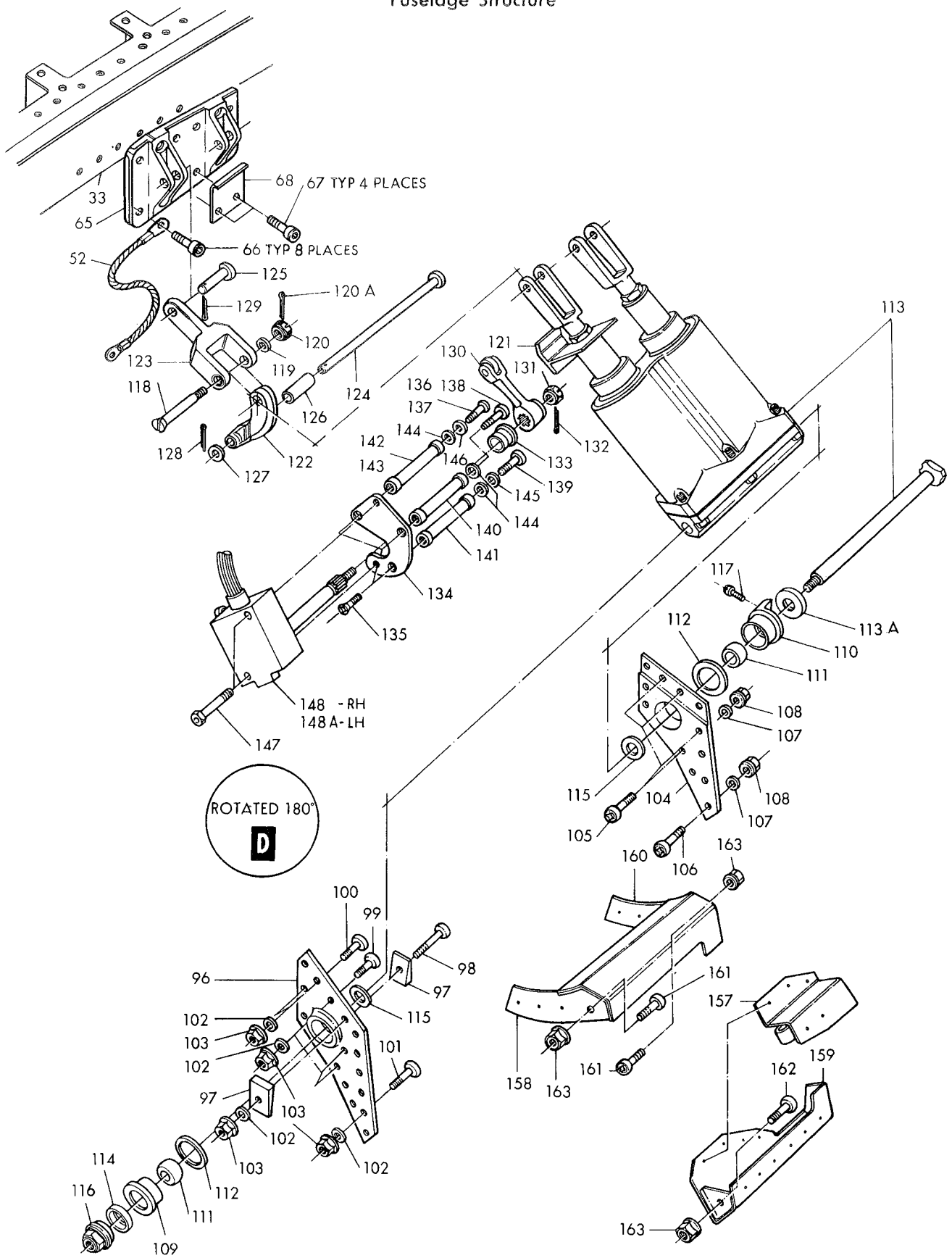

Figure 52–Engine Air Intake Duct Access Door and Hinge Cover (Sheet 3 of 3)

Figura e particolare	NDR	1	2	3	4	5	6	7	DENOMINAZIONE	Quant.	Codice applicab.
52-30	849263-101								HINGE HALF LH	1	
	849263-102								HINGE HALF RH	1	
-31	851329-101								HINGE LOWER LH	1	
	851329-102								HINGE LOWER RH	1	
-32	849265-103								PIN	1	
-33	849257-101								BEAM, lover LH	1	
	849257-102								BEAM, lover RH	1	
-34	849258-101								BEAM, upper LH	1	
	849258-102								BEAM, upper RH	1	
-35	849284-101								SHIM	4	
-36	849284-103								SHIM	2	
-37	849284-105								SHIM	2	
-38	849284-107								SHIM	2	
-39	849284-109								SHIM	4	
									Attaching Parts		
-40	NAS623-3-4								SCREW (80205)	1	
-41	MS21042L3								NUT (96906)	1	
-42	NAS1203-3D								SCREW (80205)	4	
-43	NAS1203-4D								SCREW (80205)	4	
-44	AN960-10L								WASHER (88044)	8	
-45	Z7763-3								NUT (72962)	8	
	MS24665-132								COTTER PIN (96906)	8	
-46	NAS1203-2								SCREW (80205)	12	
-47	NAS1203-3								SCREW (80205)	12	
-48	NAS1203-4								SCREW (80205)	15	
-49	NAS1203-5								SCREW (80205)	2	
-50	NAS1203-6								SCREW (80205)	2	
									*		
-51	KM713-16-051								DOOR ASSY (71286)	2	
-52	MS25083-2CC5								JUMPER (96906)	1	
	850189-105								FITTING INSTL, aux inlet door LH	1	
	850189-106								FITTING INSTL, aux inlet door RH	1	
-53	851359-101								FITTING, fuselage station 411 aux door latch fixed LH	1	
	851359-102								FITTING, fuselage station 411 aux dorr latch fixed RH	1	
-54	851360-101								FITTING, fuselage station 406 aux door latch fixed LH	1	
	851360-102								FITTING, fuselage station 406 aux door latch fixed RH	1	
									Attaching Parts		
-55	LS9683C4H								SCREW (36659)	2	
-56	LS9643C4D								SCREW (36659)	2	
-57	LS9683C5H								SCREW (36659)	2	
-58	LS9643C5D								SCREW (36659)	2	
-59	AN960-10L								WASHER (88044)	AR	
-60	Z7763-3								NUT (72962)	4	
-61	MS24665-132								COTTER PIN (96906)	4	
-62	850266-101								SHIM	AR	
									*		
-63	850227-101	A.							PIN ASSY, aux door actuator	1	
-64	850058-103								PLATE	1	
	850216-105								FITTING INSTL, aux air inlet door LH	1	
	850216-106								FITTING INSTL, aux air inlet door RH	1	
-65	850219-101								ATTACH FITTING, aux air inlet door actuator LH	1	
	850219-102								ATTACH FITTING, aux air inlet door actuator RH	1	
									Attaching Parts		
-66	LS575-3-15H								BOLT (36659)	8	
-67	LS575-3-16H								BOLT (36659)	4	
									*		
-68	850283-101								PIN RETAINER, aux air inlet door actuator linkage	1	
	850147-103								FITTING INSTL, aux air inlet door guide LH	1	
	850147-104								FITTING INSTL, aux air inlet door guide RH	1	
-69	850150-101								FITTING, fuselage station 400 aux air inlet door guide LH	1	

Figura e particolare	NDR	DENOMINAZIONE	Quant.	Codice applicab.
52	850150-102	FITTING, fuselage station 400 aux air inlet door guide RH	1	
-70	850151-101	FITTING, fuselage station 415 aux air inlet door guide LH	1	
	850151-102	FITTING, fuselage station 415 aux air inlet door guide RH	1	
		Attaching Parts		
-71	NAS1154-3	SCREW (80205)	2	
-72	NAS1154-4	SCREW (80205)	1	
-73	NAS1154-6	SCREW (80205)	1	
-74	NAS1022N4	NUT (80205)	4	
	MS27253-1	NAMEPLATE (96906)	1	
	850147-101	STRUCTURE INSTL, aux air inlet door guide LH *(see fig. 51 for reqd)*	REF	
	850147-102	STRUCTURE INSTL, aux air inlet door guide RH *(see fig. 51 for reqd)*	REF	
-75	850148-101	FITTING, fuselage station 416 aux air inlet door guide LH	1	
	850148-102	FITTING, fuselage station 416 aux air inlet door guide RH	1	
-76	850152-101	FILLER	AR	
-77	850149-101	FITTING, fuselage station 400 aux air inlet door guide LH	1	
	850149-102	FITTING, fuselage station 400 aux air inlet door guide RH	1	
-78	850153-101	FILLER	AR	
		Attaching Parts		
-79	NAS1154-7	BOLT (80205)	2	
-80	NAS517-4-12	SCREW (80205)	1	
-81	NAS517-4-13	SCREW (80205)	1	
	850234-101	DOOR INSTL, fuselage station 400 to 416 lower access LH *(see fig. 51 for reqd)*	REF	
	850234-102	DOOR INSTL, fuselage station 400 to 416 lower access RH *(see fig. 51 for reqd)*	REF	
-82	851322-101	DOOR, fuselage station 400 to 416 lower access LH	1	
	851322-102	DOOR, fuselage station 400 to 416 lower access RH	1	
		Attaching Parts		
-83	NAS1203-4	SCREW (80205)	47	
-84	NAS1203-6	SCREW (80205)	18	
-85	NAS1203-8	SCREW (80205)	2	
	850159-101	SEAL INSTL, auxiliary air inlet door LH *(see fig. 51 for reqd)*	REF	
	850159-102	SEAL INSTL, auxiliary air inlet door RH *(see fig. 51 for reqd)*	REF	
	850159-103	RETAINER, aux air inlet door LH	1	
	850159-104	RETAINER, aux air inlet door RH	1	
		Attaching Parts		
-86	NAS517-3-4	SCREW (80205)	16	
-87	850159-111	RETAINER, fwd LH	1	
	850159-112	RETAINER, fwd RH	1	
	850159-105	RETAINER, aux air inlet door LH	1	
	850159-106	RETAINER, aux air inlet door RH	1	
		Attaching Parts		
-88	NAS517-3-4	SCREW (80205)	17	
-89	850159-109	RETAINER, aft LH	1	
	850159-110	RETAINER, aft RH	1	
-90	850159-107	RETAINER, upper LH	1	
	850159-108	RETAINER, upper RH	1	
		Attaching Parts		
-91	NAS517-3-4	SCREW (80205)	6	
-92	850157-101	SEAL ASSY, aux air inlet door LH	1	
	850157-102	SEAL ASSY, aux air inlet door RH	1	
-93	850160-101	SUPPORT, lower hinge seal LH	1	
	850160-102	SUPPORT, lower hinge seal RH	1	
		Attaching Parts		
-94	NAS1124-7H	SCREW (80205)	6	
-95	NAS1124-8H	SCREW (80205)	2	

Figura e particolare	NDR	DENOMINAZIONE	Quant.	Codice applicab.
52	850216-103	FITTING INSTL, aux air inlet door LH *(see fig. 51 for reqd)*	REF	
	850216-104	FITTING INSTL, aux air inlet door RH *(see fig. 51 for reqd)*	REF	
-96	850252-101	FITTING, aux door actuator LH	1	
	850252-102	FITTING, aux door actuator RH	1	
		Attaching Parts		
-97	766352-57	SHIM (1 under joggle and 1 on top)	2	
-98	NAS1203-3	SCREW (80205)	1	
-99	NAS623-3-3	SCREW (80205)	3	
-100	NAS623-3-4	SCREW (80205)	2	
-101	NAS623-3-5	SCREW (80205)	10	
-102	NAS620A10L	WASHER (80205)	16	
-103	MS21042L3	NUT (96906)	16	
-104	850253-101	FITTING, aux door actuator LH	1	
	850253-102	FITTING, aux door actuator RH	1	
		Attaching Parts		
-105	NAS623-3-3	SCREW (80205)	4	
-106	NAS623-3-5	SCREW (80205)	8	
-107	NAS620A10L	WASHER (80205)	12	
-108	MS21042L3	NUT (96906)	12	
-109	850478-101	BUSHING ASSY, aux door actuator	1	
-110	850254-101	BUSHING ASSY, aux door actuator	1	
-111	TGA10	BEARING (77896)	1	
-112	850255-101	SHIM, aux door actuator	AR	
	850216-101	ACTUATOR INSTL, aux air inlet door LH *(see fig. 51 for reqd)*	REF	
	850216-102	ACTUATOR INSTL, aux air inlet door RH *(see fig. 51 for reqd)*	REF	
-113	0-3576	CYLINDER, hydraulic, dual rod, manifolded type II sys (A0359) (alternate to 6040-103)	1	
	6040-103	CYLINDER, hydraulic, dual rod, manifolded type II sys (00286) (Lockheed spec 670942-103) (alternate to 0-3576)	REF	
		Attaching Parts		
-113A	850273-101	WASHER	1	
-114	68117WM	WASHER (03680)	1	
-115	AN960-1016L	WASHER (88044)	2	
-116	68117NM	NUT (03680)	1	
-117	AN500A8-6	SCREW (88044)	1	
-118	851312-101	BOLT, aux door actuator linkage	2	
-119	LS881-7	WASHER (36659)	2	
-120	AN320-3	NUT (88044)	2	
-120A	MS24665-132	COTTER PIN (96906)	2	
-121	851311-101	STRIKER TEE, sensing switch, aux air inlet door open LH	1	
	851311-102	STRIKER TEE, sensing switch, aux air inlet door open RH	1	
-122	850217-101	IDLER, aux door actuator	2	
-123	850218-103	LINK, aux door actuator	2	
		Attaching Parts		
-124	850250-101	PIN, aux door actuator idler	1	
-125	850251-101	PIN, aux door actuator linkage	2	
-126	NAS43DD6-56	SPACER (80205)	1	
-127	5712-88-62	WASHER (86928)	1	
-128	MS24665-153	COTTER PIN (96906)	1	
-129	MS24665-283	COTTER PIN (96906)	2	
	850060-101	SENSING SWITCH INSTL, aux inlet open door LH *(see fig. 51 for reqd)*	REF	
	850060-103	SENSING SWITCH INSTL, aux inlet open door RH *(see fig. 51 for reqd)*	REF	
-130	850263-101	ACTUATION ARM, switch aux air inlet door open assy of LH	1	
	850263-103	ACTUATION ARM, switch aux air inlet door open assy of RH	1	
-131	AN320-3	NUT (88044)	1	
-132	MS24665-130	COTTER PIN (96906)	1	

Figura e particolare	NDR	1 2 3 4 5 6 7 DENOMINAZIONE	Quant.	Codice applicab.
52-133	850260-101	BUSHING	1	
-134	850262-105	SUPPORT PLATE, aux air inlet door sensing switch	1	
-135	NAS1203-2	SCREW (80205)	3	
-136	NAS1203-4	SCREW (80205) (only RH)	1	
-137	NAS1203-6	SCREW (80205) (only LH)	1	
-138	NAS623-3-1	SCREW (80205)	1	
-139	NAS623-3-3	SCREW (80205)	1	
-140	850261-109	SPACER	1	
-141	850261-111	SPACER	1	
-142	850261-111	SPACER (only RH)	1	
-143	850261-113	SPACER (only LH)	1	
-144	850060-105	SHIM	3	
-145	AN960D10	WASHER (88044)	1	
-146	LS2816-4	WASHER (36659)	1	
-147	NAS1103-23	BOLT (80205)	2	
-148	80B200	SWITCH, (S172) dpdt spring return rotary actuator (98816) (LH inlet door closed position) (Lockheed spec dwg 740418-101) *(see fig. 192 for reqd)*	REF	
-148A	80B225	SWITCH, dpdt spring return rotary actuator (98816) (LH inlet door open position) (Lockheed spec dwg 740418-103) *(see fig. 192 for reqd)*	REF	
	850058-101	SENSING SWITCH INSTL, aux air inlet left hand side closed door *(see fig. 51 for reqd)*	REF	
	850059-101	SENSING SWITCH INSTL, aux air inlet right hand side closed door *(see fig. 51 for reqd)*	REF	
-149	850058-105	BRACKET ASSY	1	
-150	850256-101	CHANNEL	1	
		Attaching Parts		
-151	NAS623-3-2	SCREW (80205)	4	
-152	850259-101	ACTUATION ARM, aux air inlet closed door LH	1	
	850259-103	ACTUATION ARM, aux air inlet closed door RH	1	
-153	850260-101	BUSHING, switch arm aux air inlet door	1	
-154	NAS1103-23	BOLT (80205)	2	
-155	AN960D10	WASHER (88044)	1	
-156	AN320-3	NUT (88044)	1	
-156A	MS24665-130	COTTER PIN (96906)	1	
	850454-101	SEAL INSTL, actuator bay LH *(see fig. 51 for reqd)*	REF	
	850454-102	SEAL INSTL, actuator bay RH *(see fig. 51 for reqd)*	REF	
-157	850453-101	VALVE, drain hole LH	1	
	850453-102	VALVE, drain hole RH	1	
-158	850454-107	PLATE	1	
-159	850454-109	PLATE	1	
-160	850454-111	PLATE	1	
-161	NAS623-3-4	SCREW (80205)	2	
-162	NAS623-3-5	SCREW (80205)	1	
-163	MS21042L3	NUT (96906)	3	

A - Reqd per AA.1F-104S-OT-134A

Figura e particolare	NDR	DENOMINAZIONE 1 2 3 4 5 6 7	Quant.	Codice applicab.
		ENGINE AIR INTAKE DUCT SPLITTER SEAL		
53	775198-1	. SEAL INSTL, air intake splitter duct *(see fig. 31 for reqd)*	REF	
- 1	775199-1	. . SEAL, air intake duct upper	1	
- 2	775342-1	. . SEAL, air intake duct end	2	
- 3	775343-1	. . SEAL, air intake duct center	2	
- 4	775200-1	. . SEAL, air intake duct lower	1	
- 5	760219-63	. FAIRING ASSY, engine air duct *(see fig. 51 for reqd)*	REF	
	760219-64	. FAIRING ASSY, engine air duct *(see fig. 51 for reqd)*	REF	
- 6	774234-1	. HOUSING, LH engine air duct starter (match comp do not stk sep) *(see fig. 51 for reqd)*	REF	
	774234-2	. HOUSING, RH engine air duct starter (match comp do not stk sep) *(see fig. 51 for reqd)*	REF	

Fuselage Structure

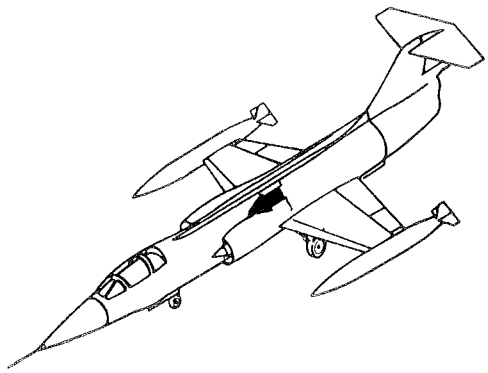

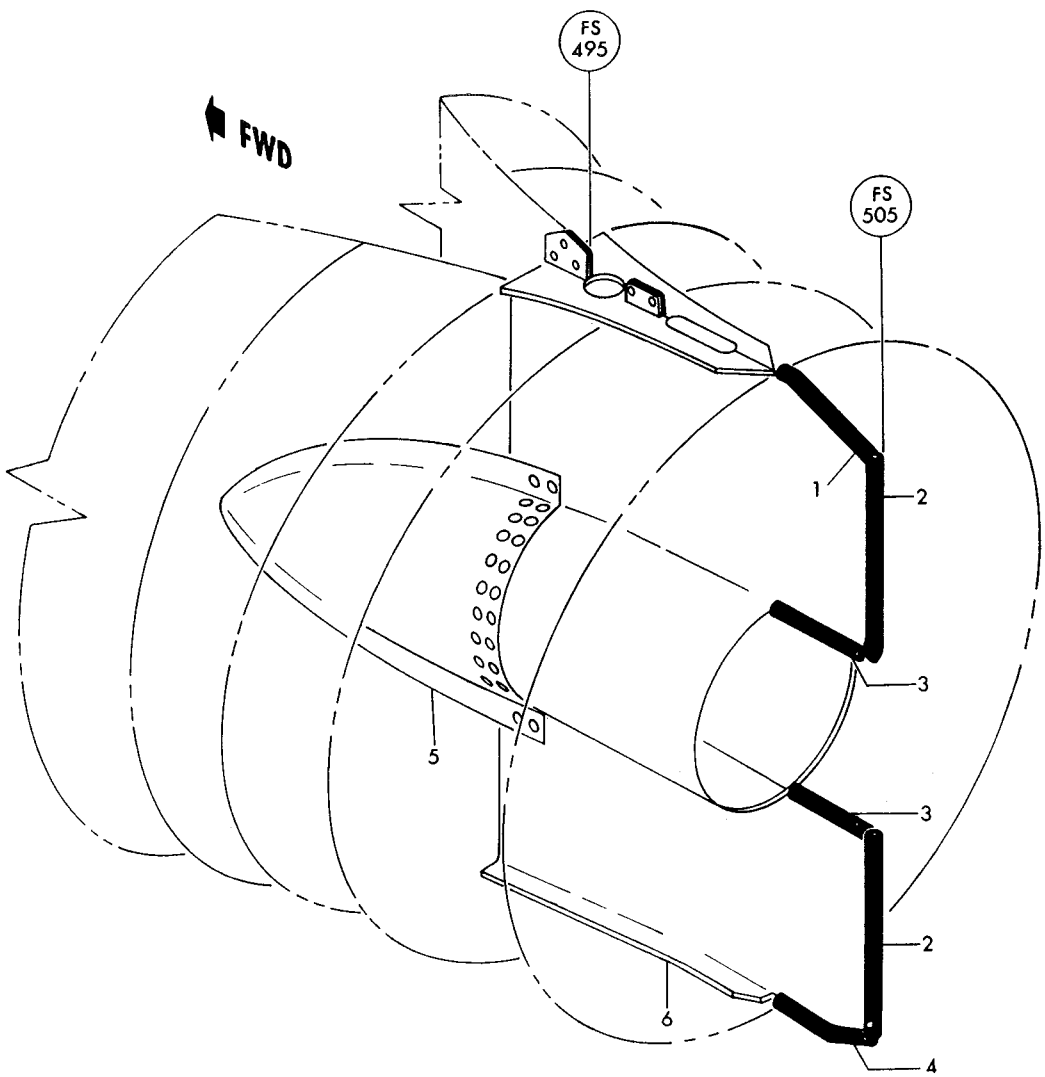

Figure 53—Engine Air Intake Duct Splitter Seal

Figura e particolare	NDR	1 2 3 4 5 6 7 DENOMINAZIONE	Quant.	Codice applicab.
		ENGINE GROUND COOLING DOORS		
54	761069L	. DOOR INSTL, ground cooling *(see fig. 31 for reqd)*	REF	
	761069R	. DOOR INSTL, ground cooling *(see fig. 31 for reqd)*	REF	
- 1	761069-15	. . DOOR ASSY, ground cooling LH	1	
- 2	761069-16	. . DOOR ASSY, ground cooling RH	1	
		Attaching Parts		
	NAS1204-4	. . SCREW (80205)	4	
		*		
- 3	761069-4L	. . . FLAPPER ASSY, ground cooling door	1	
	761069-4R	. . . FLAPPER ASSY, ground cooling door	1	
- 4	761069-5L	. . . FLAPPER ASSY, ground cooling door	1	
	761069-5R	. . . FLAPPER ASSY, ground cooling door	1	
- 5	761133	. . . . HINGE, flapper doors half	1	
- 6	761069-9	. . . SUPPORT ASSY, ground cooling door	1	
	761069-10	. . . . CHANNEL, ground cooling door	1	
- 7	761134	. . . . HINGE, flapper doors center half	1	
- 8	761069-11	. . . PIN, hinge	2	
- 9	726098-3	. . . SPRING, flapper doors hinge	2	
	783288-103	A. FRAME INSTL, upper RH ground cooling door *(see fig. 31 for reqd)*	REF	6701-6790; 6831-6840
	—	C. FRAME INSTL, upper RH ground cooling door *(see fig. 31 for reqd)*	REF	6791-6830
	783288-105	B. FRAME INSTL, upper RH ground cooling door *(see fig. 31 for reqd)*	REF	6841-
	775044-105	. . DOOR INSTL, upper RH ground cooling	1	6701-6790; 6831-
	852508-101	C. . DOOR INSTL, upper RH ground cooling	1	6791-6830
-10	775044-107	A. . . DOOR ASSY, upper RH ground cooling (Reworked and reidentified to 775044-109 per AA.1F-104-OT-799)	1	6701-6840
	775044-109	B. . . DOOR ASSY, upper RH ground cooling (Supersedes 775044-107 per AA.1F-104-OT-799)	1	6841-
		Attaching Parts		
	NAS623-3-2	. . . SCREW (80205)	5	
	775044-17	. . . SHIM, upper RH ground cooling	2	
	MS21042L3	. . . NUT (96906)	5	
		*		
-11	775053-101	. . . . HINGE, ground cooling door upper half	1	
-12	775213-103	. . . . HINGE, ground cooling door lower half	1	
-13	775044-15	. . . . PIN, hinge	1	
-15	728701-101	A. . . . SPRING, hinge	3	6701-6840
	728701-103	B. . . . SPRING, hinge	3	
	775044-11	. . . . SHIM	1	
		Attaching Parts		
	NAS1203-3	. . . . SCREW (80205)	5	
		*		
-16	775043-103	A. DOOR ASSY, top LH ground cooling (Reworked and reidentified to 775043-105 per AA.1F-104-OT-799) (NHA 775043-101)	1	6701-6840
	775043-105	B. DOOR ASSY, top LH ground cooling (Supersedes 775043-103 per AA.1F-104-OT-799) (NHA 775043-101)	1	6841-
-17	775043-5	. . WELDED ASSY, top LH ground cooling door	1	
-18	775054-1	. . HINGE, ground cooling door half	1	
-19	775043-25	. . HINGE, top LH ground cooling door half	1	
		Attaching Parts		
	NAS623-3-2	. . SCREW (80205)	5	
	775043-19	. . SHIM, top LH ground cooling door	1	
	MS21042L3	. . NUT (96906)	5	
		*		
-20	775043-11	. . PIN, hinge	1	
-21	728701-101	A. . SPRING, hinge	2	6701-6840
	728701-103	B. . SPRING, hinge	2	
	761036-107	. DOUBLER INSTL, fuselage station 489 to 505 engine access *(see fig. 31 for reqd)*	REF	
	761036-108	. DOUBLER INSTL, fuselage station 489 to 505 engine access *(see fig. 31 for reqd)*	REF	
-22	761036-20	. . CHAIN, fuselage station 489 to 505 engine access	2	

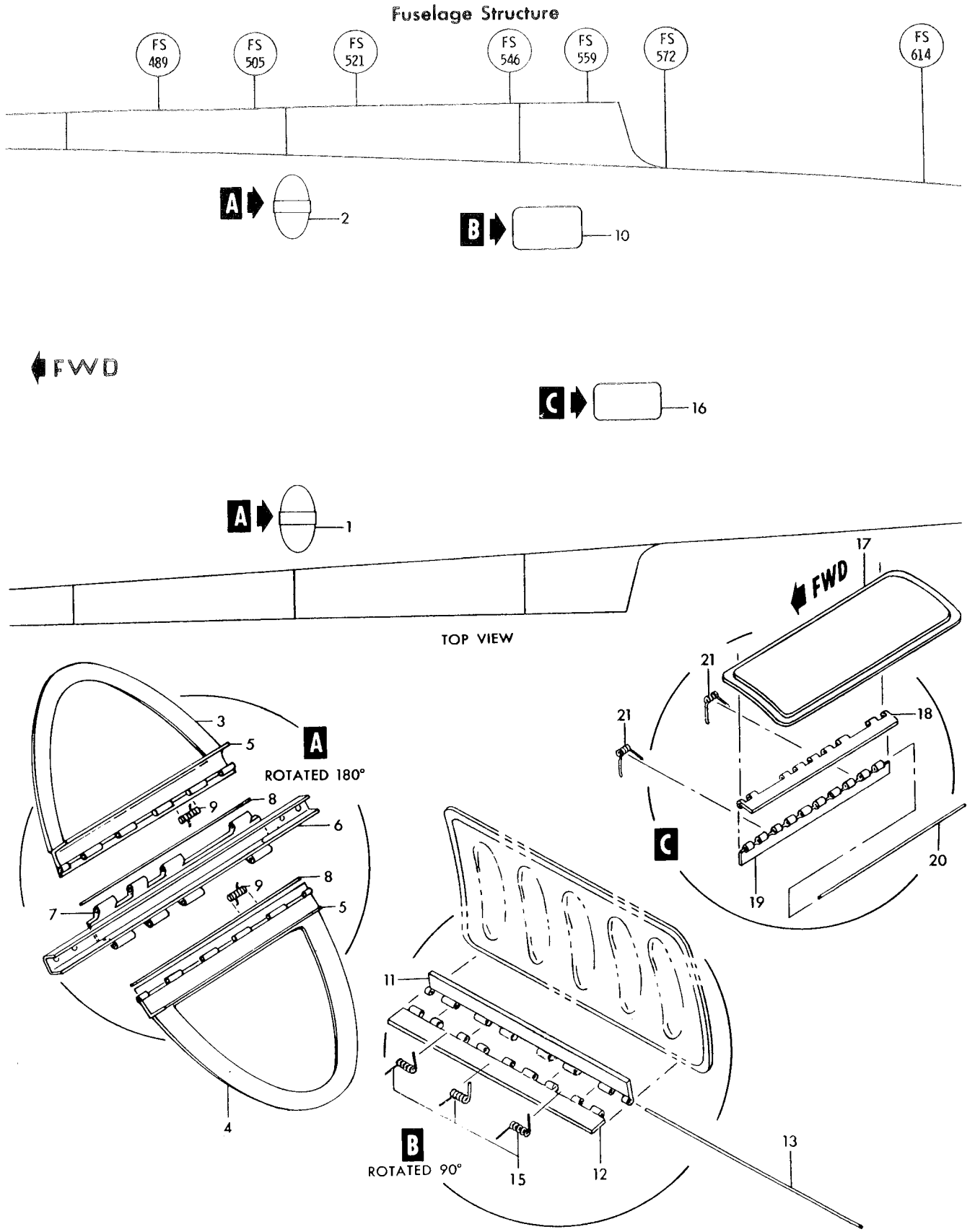

Figure 54—Engine Ground Cooling Doors (Sheet 1 of 3)

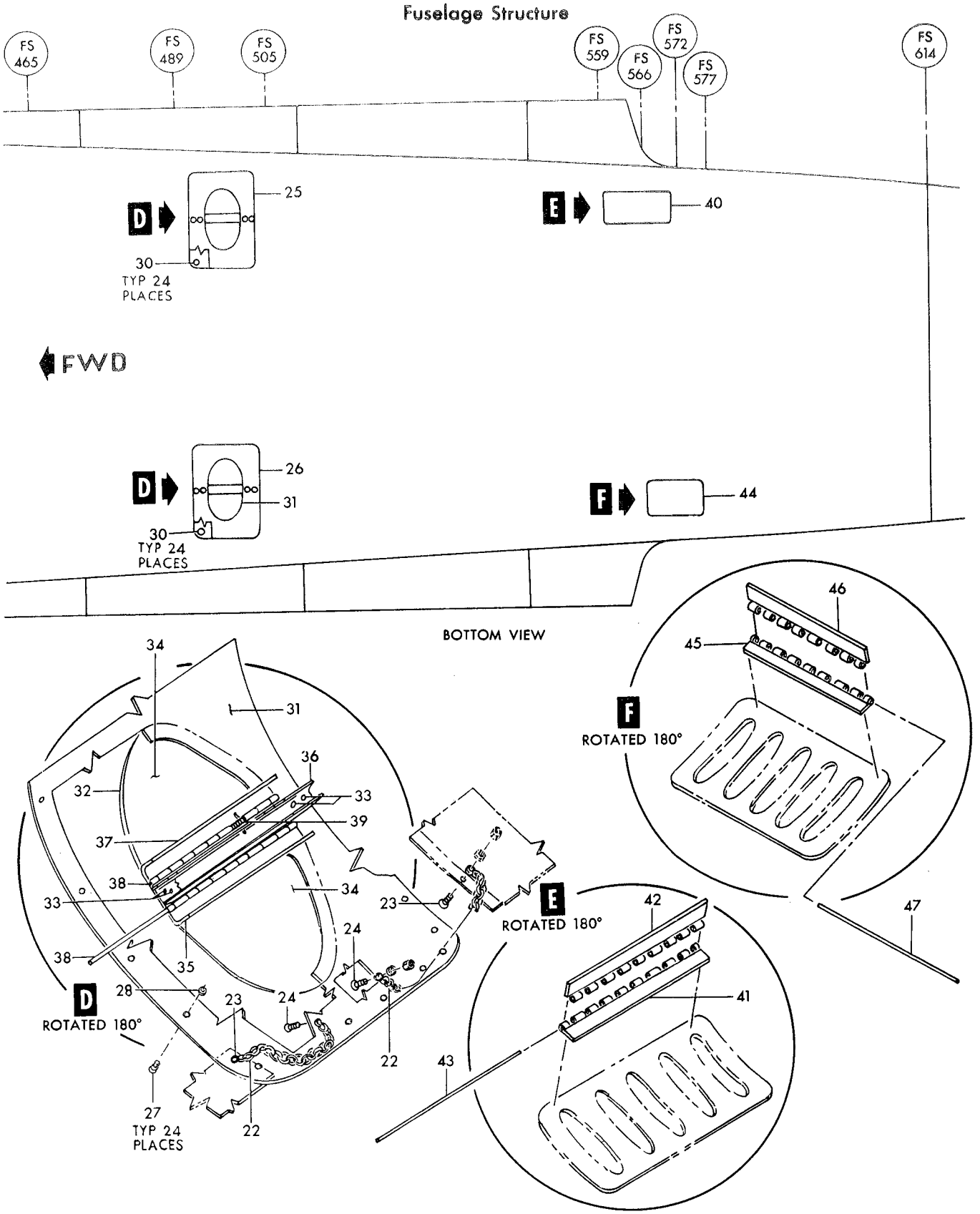

Figure 54—Engine Ground Cooling Doors (Sheet 2 of 3)

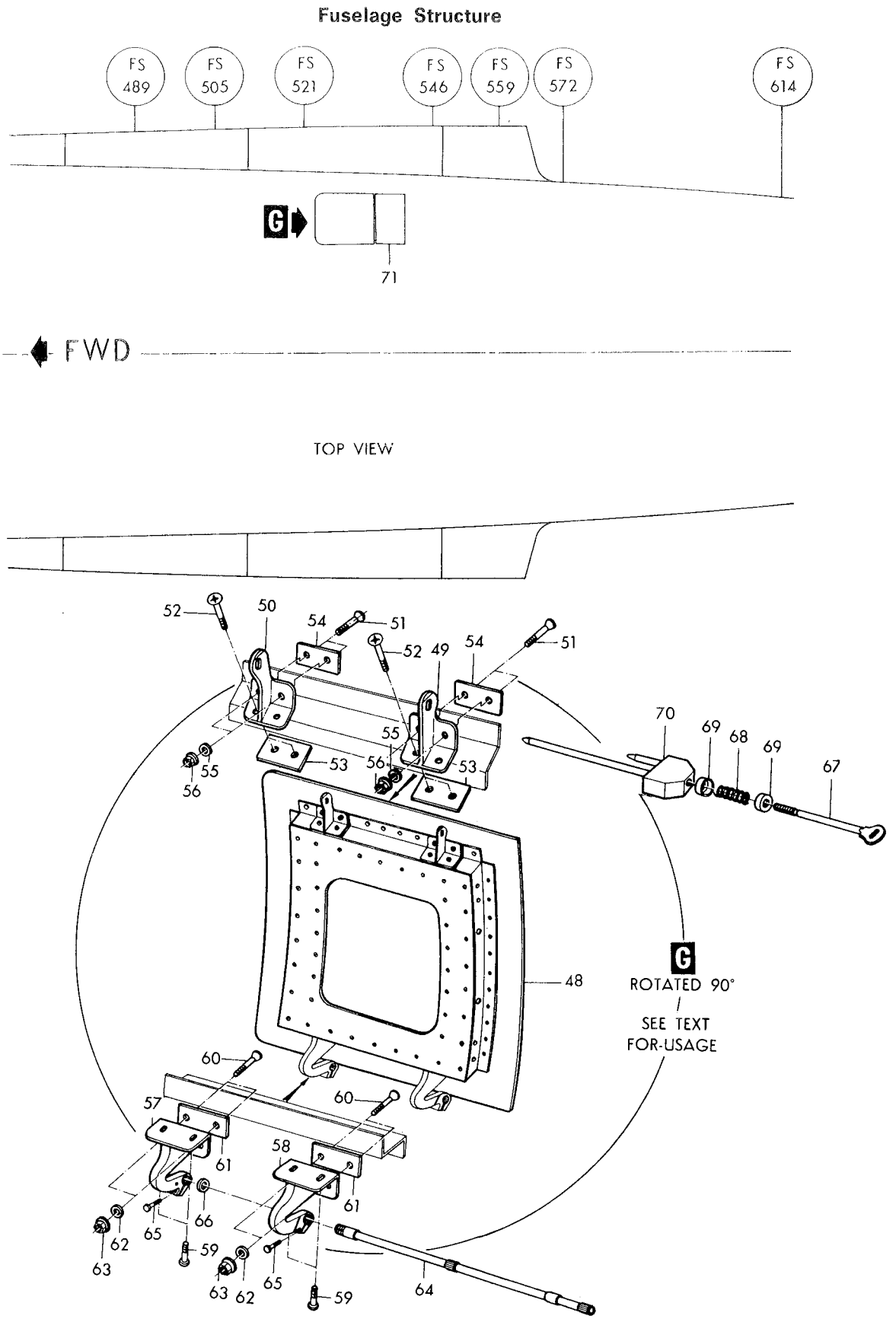

Figure 54-Engine Ground Cooling Doors (Sheet 3 of 3)

Figura e particolare	NDR	1	2	3	4	5	6	7	DENOMINAZIONE	Quant.	Codice applicab.
									Attaching Parts		
54-23	AN507-440R6								SCREW (88044)	2	
-24	AN507-440R8								SCREW (88044)	2	
	AN960D4								WASHER (88044)	4	
	MS21042L04								NUT (96906)	4	
									✲		
	761036-101								DOOR INSTL, fuselage station 489 to 505 engine access *(see fig. 31 for reqd)*	REF	
	761036-102								DOOR INSTL, fuselage station 489 to 505 engine access *(see fig. 31 for reqd)*	REF	
-25	761036-103								DOOR ASSY, complete	1	
-26	761036-104								DOOR ASSY, complete	1	
									Attaching Parts		
-27	CA18001T-O								STUD NUT (11907)	24	
-28	CA18003T								RETAINING RING (11907)	24	
-30	CA1810								RECEPTACLE (11907)	24	
									✲		
	761036-105								DOOR ASSY, engine access LH	1	
	761036-106								DOOR ASSY, engine access RH	1	
-31	761036-111								DOOR, engine access flapper LH	1	
	761036-112								DOOR, engine access flapper RH	1	
-32	761036-4								DOOR ASSY, engine access flapper	1	
									Attaching Parts		
-33	NAS517-4-3								SCREW (80205)	4	
	AN960D416								WASHER (88044)	4	
	MS21042L4								NUT (96906)	4	
									✲		
-34	761036-21								FLAPPER ASSY, fuselage station 489 to 505 engine access	2	
-35	761133								HINGE, flapper doors half	1	
-36	761036-6								CHANNEL, fuselage station 489 to 505 engine access	1	
-37	761134								HINGE, flapper doors half	1	
-38	761036-16								PIN, hinge	2	
-39	726098-3								SPRING, flapper doors hinge	1	
	783536-1								SKIN INSTL, fuselage station 552 to 579 lower LH *(see fig. 31 for reqd)*	REF	
	783536-3								SKIN ASSY, fuselage station 552 to 579 lower LH	1	
	775041-1								DOOR INSTL, lower LH ground cooling	1	
-40	775041-3								DOOR ASSY, lower LH ground cooling	1	
									Attaching Parts		
	NAS623-3-2								SCREW (80205)	5	
	775041-19								SHIM, lower LH ground cooling	2	
	AN960D10								WASHER (88044)	5	
	MS21042L3								NUT (96906)	5	
									✲		
-41	775041-13								HINGE, lower LH ground cooling door half	1	
-42	775041-15								HINGE, lower LH ground cooling door half	1	
-43	775041-17								PIN, hinge	1	
	783287-101								FRAME INSTL, lower RH ground cooling door *(see fig. 31 for reqd)*	REF	6701-6790; 6831-
	—	C.							FRAME INSTL, lower RH ground cooling door *(see fig. 31 for reqd)*	REF	6791-6830
	783287-3								FRAME ASSY, lower RH ground cooling door	1	6701-6790; 6831-
	—	C.							FRAME ASSY, lower RH ground cooling door	1	6791-6830
	775042-1								DOOR INSTL, lower RH ground cooling	1	6701-6790; 6831-
	852572-101	C.							DOOR INSTL, fus sta 566 to 577 lower cooling	1	6791-6830
-44	775042-3								DOOR ASSY, lower RH ground cooling	1	6701-6790; 6831-
	852572-103	C.							DOOR ASSY, fus sta 566 to 577 lower cooling	1	6791-6830
									Attaching Parts		
	NAS623-3-2								SCREW (80205)	5	6701-6790; 6831-
	NAS1203-6	C.							BOLT (80205)	5	6791-6830
	775042-19								SHIM, lower RH ground cooling	2	6701-6790; 6831-
	852372-111	C.							SHIM, fus sta 566 to 577 lower cooling	1	6791-6830
	MS21042L3								NUT (96906)	5	6701-6790; 6831-
									✲		
-45	775042-13								HINGE, lower RH ground cooling door half	1	6701-6790; 6831-
	852573-105	C.							HINGE, fus sta 566 to 577 lower cooling (NHA 852573-101)	1	6791-6830

Figura e particolare	NDR	1 2 3 4 5 6 7	DENOMINAZIONE	Quant.	Codice applicab.
54-46	775042-15		HINGE, lower RH ground cooling door half	1	6701-6790; 6831-
	852573-103	C.	HINGE, fus sta 566 to 577 lower cooling (NHA 852573-101)	1	6791-6831
-47	775042-17		PIN, hinge	1	6701-6790; 6831-
	852573-107	C.	PIN, fus sta 566 to 577 lower cooling (NHA 852573-101)	1	6791-6831
-48	852596-101	C.	DOOR INSTL, starter exhaust-power unit	1	6791-6830
	852583-101	C.	. DOOR ASSY, starter exhaust-power unit	1	6791-6830
-49	852552-101	C.	. FITTING, exhaust latch door	1	6791-6830
-50	852574-101	C.	. FITTING, exhaust latch door	1	6791-6830
			Attaching Parts		
-51	NAS1203-6	C.	. SCREW (80205)	4	6791-6830
-52	NAS623-3-3	C.	. SCREW (80205)	4	6791-6830
-53	852633-101	C.	. SHIM, exhaust door hinge fitting	2	6791-6830
-54	852634-101	C.	. SHIM, exhaust door latch	2	6791-6830
-55	AN960C10	C.	. WASHER (88044)	4	6791-6830
-56	MS21043-3	C.	. NUT (96906)	4	6791-6830
-57	852666-101	C.	. FITTING, exhaust hinge door	1	6791-6830
-58	852667-101	C.	. FITTING, exhaust hinge door	1	6791-6830
			Attaching Parts		
-59	NAS623-3-2	C.	. SCREW (80205)	4	6791-6830
-60	NAS1203-6	C.	. SCREW (80205)	4	6791-6830
-61	852632-101	C.	. SHIM, exhaust door hinge fitting	2	6791-6830
-62	AN960C10	C.	. WASHER (88044)	4	6791-6830
-63	MS21043-3	C.	. NUT (96906)	4	6791-6830
-64	852595-101	C.	. SHAFT, exhaust door	1	6791-6830
-65	AN502-10-8	C.	. SCREW (88044)	2	6791-6830
-66	785785-101	C.	. WASHER (11 max)	AR	6791-6830
	852584-101	C.	LATCH INSTL, exhaust door	1	6791-6830
-67	852591-101	C.	. ROD, exhaust latch-door plunger	1	6791-6830
-68	852586-101	C.	. SPRING, exhaust latch-door	1	6791-6830
-69	852599-101	C.	. RETAINER, exhaust door spring end	2	6791-6830
-70	852588-101	C.	. PIN, exhaust latch-door	1	6791-6830
-71	852577-101	C.	COVER INSTL, fus sta 539 to 546 *(see fig. 61 for reqd)*	REF	6791-6830

A - Removed per AA.1F-104-OT-799
B - Reqd per AA.1F-104-OT-799
C - Only per partial incorporation of SPU system

Figura e particolare	NDR	1 2 3 4 5 6 7 DENOMINAZIONE	Quant.	Codice applicab.
		KEELSON FUSELAGE STATION 422 TO 489		
55	783171-1	KEELSON INST, fuselage station 422 to 489 *(see fig. 31 for reqd)*	REF	
	783171-3	ATTACHMENT INSTL, fuselage station 422 to 489 *(see fig. 31 for reqd)*	REF	
- 1	NAS632-42	BOLT (80205)	1	
	MS20002C12	WASHER (96906)	1	
	MS20002-12	WASHER (96906)	1	
	EB126	NUT, self-locking (72962)	1	
- 2	EWSB26-8-22	BOLT, shear (56878)	3	
	AN960-816	WASHER (88044)	3	
	MS20002C8	WASHER (96906)	3	
	NAS1022AB	NUT (80205)	3	
- 3	EWSB26-8-16	BOLT, shear (56878)	2	
	AN960-816	WASHER (88044)	2	
	MS20002C8	WASHER (96906)	2	
	NAS1022A8	NUT (80205)	2	
- 4	NAS628-16	BOLT (80205)	3	
	MS20002C8	WASHER (96906)	3	
	AN960-816	WASHER (88044)	3	
	NAS1021A8	NUT (80205)	3	
- 5	NAS628-25	BOLT (80205)	2	
- 6	MS20002C8	WASHER (96906)	2	
- 7	MS20002-8	WASHER (2 maximum used) (96906)	2	
- 8	2752-080	NUT, barrel floating (72962)	2	
- 9	LS4893-8	RETAINER, barrel nut (36659)	2	
-10	NAS623-3-7	SCREW (80205) (reqd on 783171-1)	20	
	AN960D10	WASHER (88044) (reqd on 783171-1)	20	
	MS21042L3	NUT 96906) (reqd on 783171-1)	20	
-11	NAS1104-10	BOLT (80205)	2	
-12	NAS1104-12	BOLT (80205)	2	
	AN960D416	WASHER (88044)	4	
	MS21042L4	NUT (96906)	4	
-13	NAS1105-16D	BOLT (80205) (reqd on 783171-3)	2	
	AN960D516	WASHER (88044) (reqd on 783171-3)	2	
	MS21042L5	NUT (96906) (reqd on 783171-3)	2	
-14	NAS625-12	BOLT (80205)	2	
	MS20002C5	WASHER (96906)	2	
	MS20002-5	WASHER (96906)	2	
	EB054	NUT, self-locking (72962)	2	
-15	NAS624-12	BOLT (80205)	6	
	MS20002C4	WASHER (96906)	6	
	MS20002-4	WASHER (96906)	6	
	EB048	NUT, self-locking (72962)	6	
-16	NAS1104-8	BOLT (80205)	1	
	AN960D416	WASHER (88044)	1	
	MS21042L4	NUT (96906)	1	
-17	NAS623-3-8	SCREW (80205)	2	
	AN960D10	WASHER (88044)	2	
	MS21042L3	NUT (96906)	2	
-18	NAS623-3-4	SCREW (80205)	6	
-19	NAS623-3-5	SCREW (80205)	16	
-20	NAS623-3-6	SCREW (80205)	2	
-21	NAS517-3-4	SCREW (80205)	1	
	AN960D10	WASHER (88044)	23	
	MS21042L3	NUT (96906)	23	
-22	AN4-6A	BOLT (88044)	3	
	AN960D416	WASHER (88044)	3	
	MS21042L4	NUT (96906)	3	
-23	MS20010-26	BOLT (96906)	1	
-24	MS20002C10	WASHER (96906)	1	
-25	MS20002-10	WASHER (2 maximum used) (96906)	2	

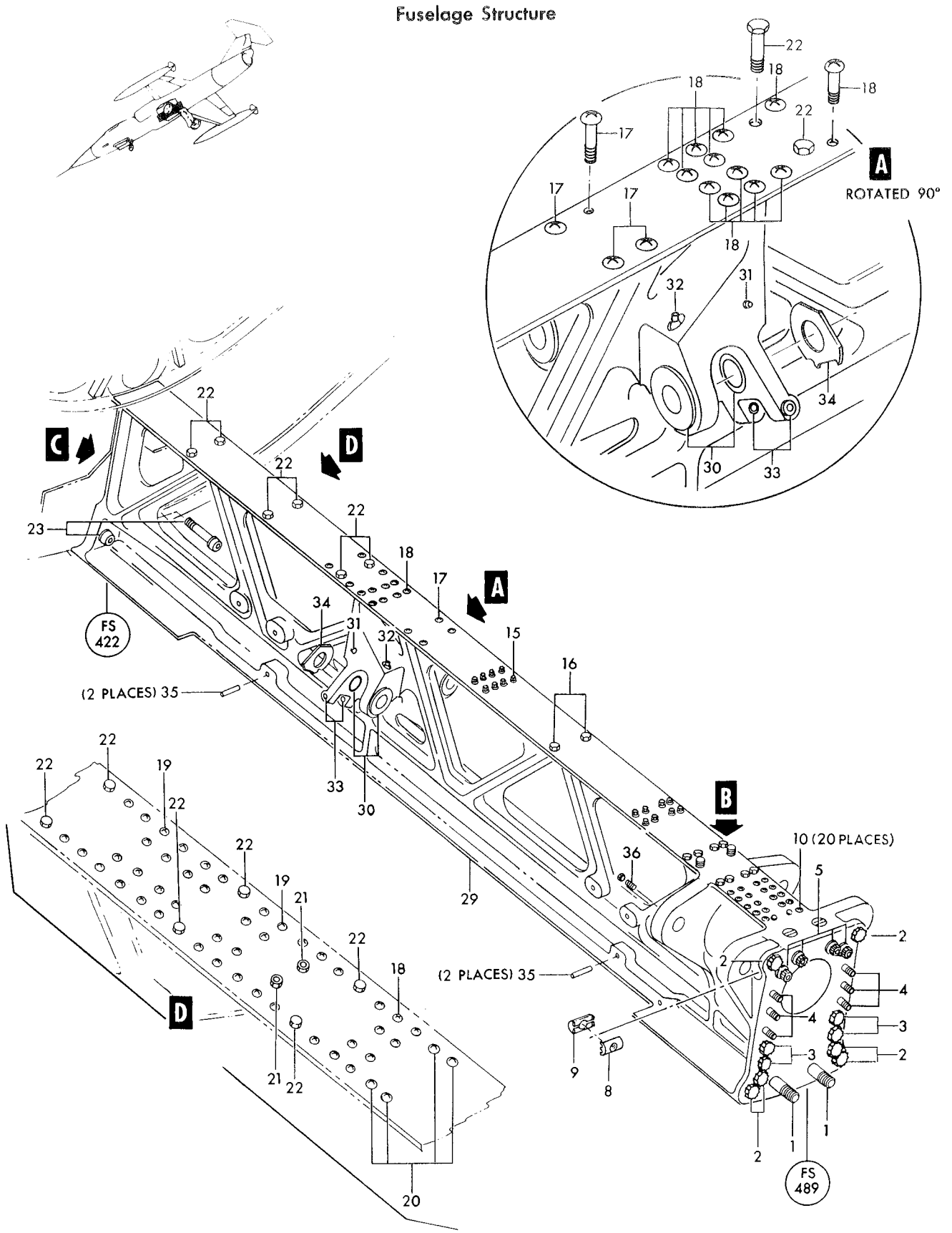

Figure 55—Keelson Fuselage Station 422 to 489 (Sheet 1 of 2)

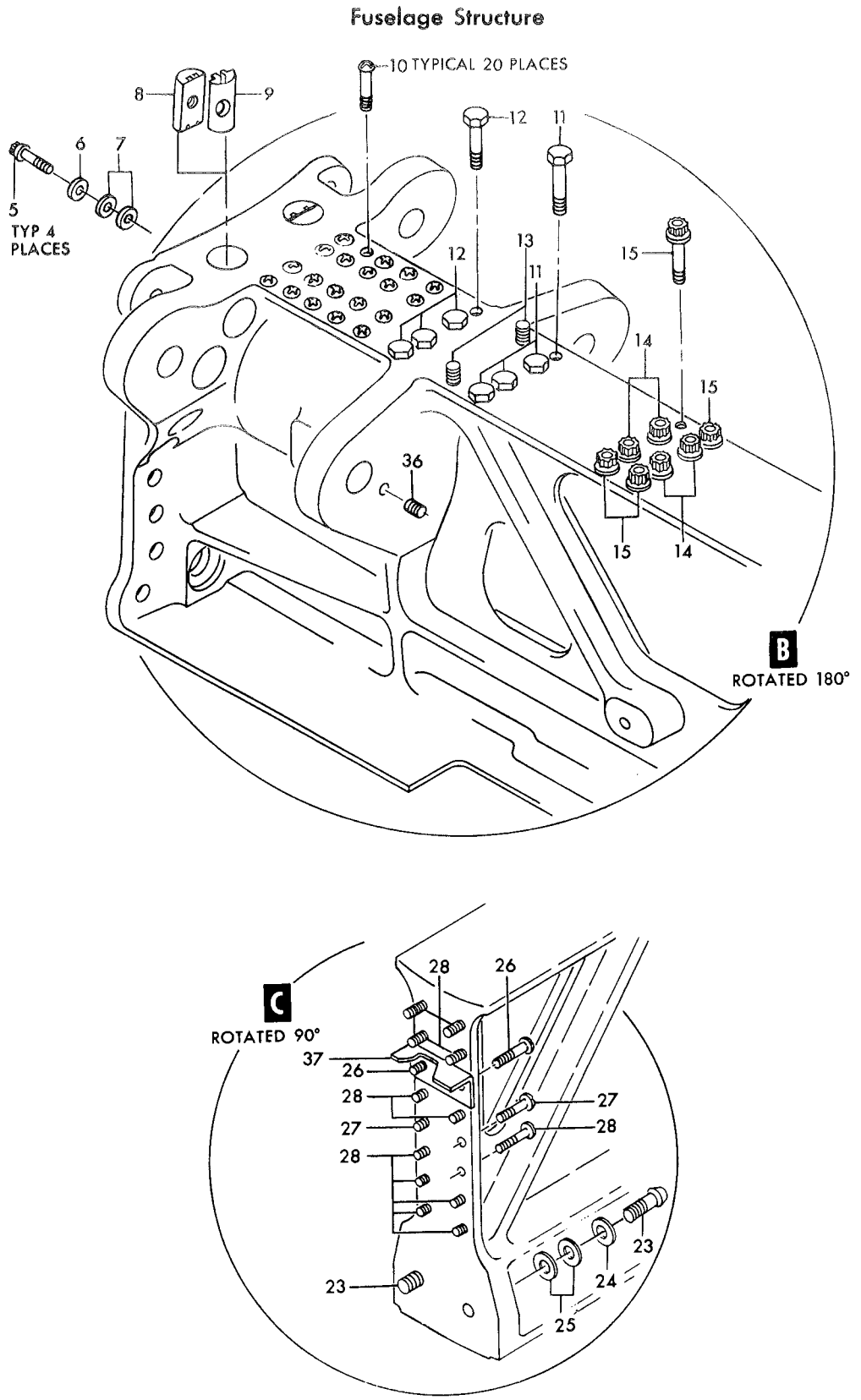

Figure 55—Keelson Fuselage Station 422 to 489 (Sheet 2 of 2)

Figura e particolare	NDR	1	2	3	4	5	6	7	DENOMINAZIONE	Quant.	Codice applicab.
55-26	NAS623-4-10			SCREW (80205)						1	
-27	NAS623-4-6			SCREW (80205)						1	
-28	NAS623-4-9			SCREW (80205)						6	
	AN960D416			WASHER (88044)						8	
	MS21042L4			NUT (96906)						8	
-29	783170-1			KEELSON ASSY, fuselage station 422 to 489 (reqd on 783171-1) *(see fig. 31 for reqd)*						1	
-30	760191				BUSHING, landing gear support keelson					4	
-31	MS15001-1				FITTING (lubrication) (96906)					2	
-32	MS15001-4				FITTING (lubrication) (96906)					2	
-33	762711				BUSHING, main landing gear door mechanism					4	
-34	761333				SHIM, landing gear support bushing					2	
-35	LS3859R4-30				BUSHING, main landing gear support keelson assy (36659)					4	
-36	NAS1394C4L				INSERT (80205)					2	
-37	771117-1			PLATE ASSY, forward main fuel tank hydraulic line cover (reqd on 783171-3)						1	

Figura e particolare	NDR	1 2 3 4 5 6 7 DENOMINAZIONE	Quant.	Codice applicab.
		FIREWALL FUSELAGE STATION 489 TO 505		
56	761847-207	. FIREWALL INSTL, fuselage station 489 to 505 LH *(see fig. 31 for reqd)*	REF	
	761847-205	. FIREWALL INSTL, fuselage station 489 to 505 RH *(see fig. 31 for reqd)*	REF	
- 1	762324L	. . BRACKET ASSY, firewall seal	1	
- 2	761847-55L	. . ANGLE, fuselage station 489 to 505 firewall	1	
- 3	761847-55R	. . ANGLE, fuselage station 489 to 505 firewall	1	
- 4	762341	. . SUPPORT ASSY, fuselage station 489 firewall	1	
- 5	761847-225	. . WEB ASSY, fuselage station 489 to 505 firewall LH	1	
- 6	761847-221	. . WEB ASSY, fuselage station 489 to 505 firewall RH	1	
- 7	761847-193	. . PANEL ASSY, fuselage station 489 to 505 firewall LH	1	
- 8	761847-199	. . PANEL ASSY, fuselage station 489 to 505 firewall RH	1	
- 9	761847-52L	. . BRACKET, fuselage station 489 to 505 firewall	1	
-10	761847-52R	. . BRACKET, fuselage station 489 to 505 firewall	1	
-11	761847-20	. . ANGLE, fuselage station 489 to 505 rfirewall	1	
-12	761847-229	. . WEB ASSY, fuselage station 489 to 505 firewall LH	1	
-13	761847-213	. . WEB ASSY, fuselage station 489 to 505 firewall RH	1	
-14	785946-1	. . BRACKET, fuselage station 505 outboard firewall seal LH	1	
-15	785761-101	. . BRACKET, fuselage station 505 outboard firewall seal RH	1	
-16	761847-38	. . SEAL, fuselage station 505 firewall	1	
	761847-3	. SHIELD INSTL, fuselage station 489 to 505 firewall *(see fig. 31 for reqd)*	REF	6701-6790; 6831-
	—	A. SHIELD INSTL, fuselage station 489 to 505 firewall *(see fig. 31 for reqd)*	REF	6791-6830
-17	761847-97	. . ANGLE, fuselage station 489 to 505 firewall LH	1	
-18	761847-98	. . ANGLE, fuselage station 489 to 505 firewall RH	1	
-19	762324R	. . BRACKET ASSY, firewall seal	1	
-20	761847-9	. . COVER ASSY, fuselage station 489 to 505 firewall	1	
-21	761847-79	. . COVER ASSY, fuselage station 489 to 505 firewall access	1	
-22	761847-81	. . DOOR ASSY, fuselage station 489 to 505 firewall	1	6701-6790; 6831-
	—	A. . DOOR ASSY, fuselage station 489 to 505 firewall	1	6791-6830
-22A	852812-101	A. . . FLANGE, firewall stiffener	1	6791-6830
		Attaching Parts		
-23	NAS1103-3	B. . BOLT (80205)	34	
-23A	NAS1103-3	. . BOLT (80205)	1	6701-6790; 6831-
-23B	NAS1103-4	A. . BOLT (80205)	1	6791-6830
-24	NAS221-8	. . SCREW (80205)	30	
-24A	NAS1103-4	B. . BOLT (80205)	6	
-24B	NAS1103-4	. . BOLT (80205)	3	6701-6790; 6831-
-24C	NAS1103-5	A. . BOLT (80205)	3	6791-6830
-24D	LS9661C10	A. . WASHER (36659)	3	6791-6830
-25	NAS1103-5	. . BOLT (80205)	1	
-25A	NAS1103-5	. . BOLT (80205)	1	6701-6790; 6831-
-25B	NAS1103-6	A. . BOLT (80205)	1	6791-6830
-25C	LS9661C10	A. . WASHER (36659)	1	6791-6830
-26	764516	. . WEB ASSY, firewall lower	1	
-27	761847-11	. . WEB ASSY, fuselage station 489 to 505 firewall	1	
-28	763907	. . PLATE, fuselage station 505 upper firewall stiffener	2	
-29	763918	. . HAT, firewall upper stiffener	1	
-30	762591L	. . WEB, upper firewall	1	
-31	762591R	. . WEB, upper firewall	1	
-32	761847-37	. . SPLICE, fuselage station 489 to 505 firewall	1	
-33	761847-60	. . SPLICE, fuselage station 489 to 505 firewall	1	
-34	750464-101	. TUBE ASSY, fuel strainer (36659) (Lockheed spec dwg 750464-101) *(see fig. 112 for reqd)*	REF	

A - Only per partial incorporation of SPU system
B - All parts marked with letter B serve also to install partial incorporation of SPU system

Fuselage Structure

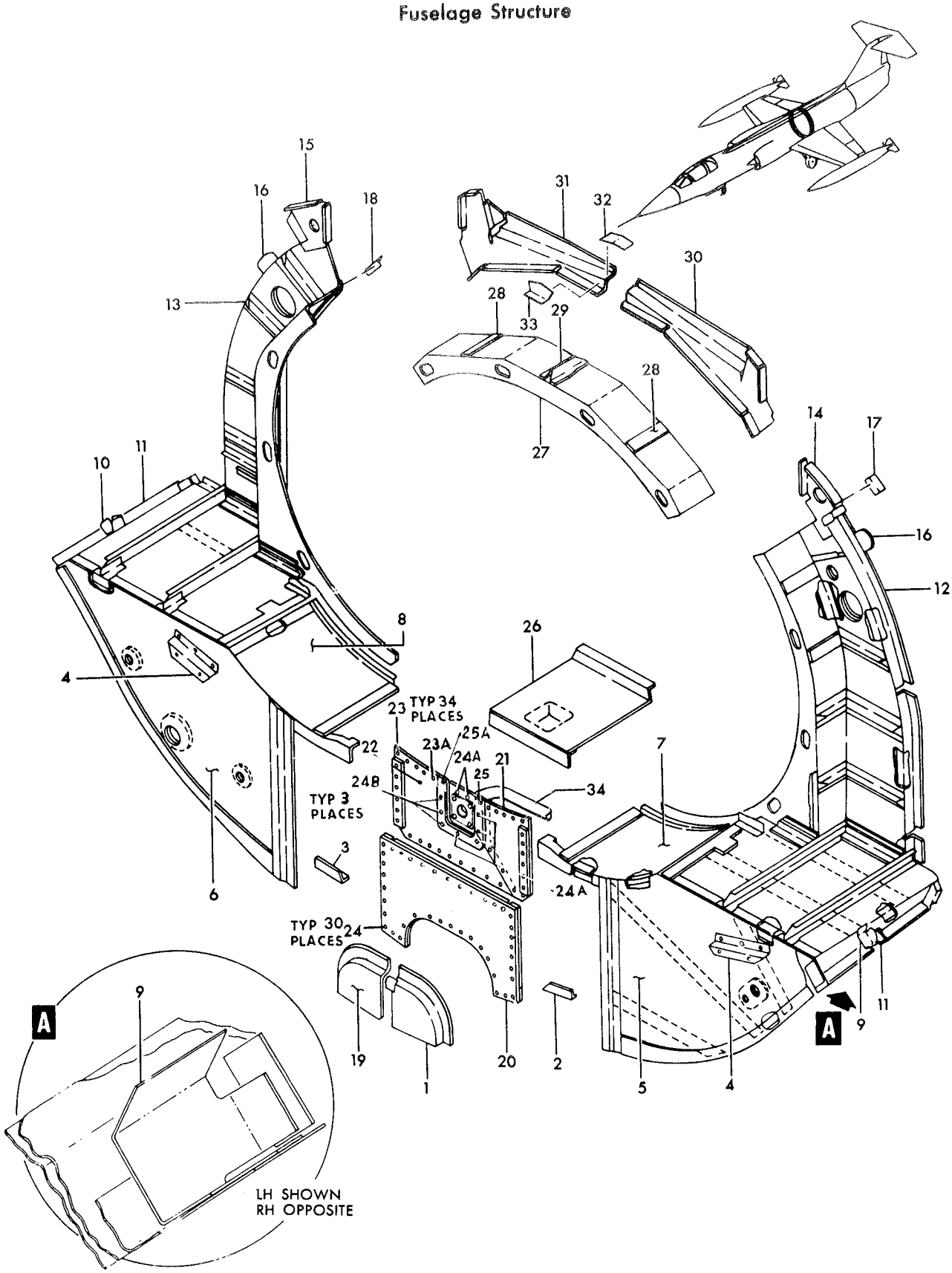

Figure 56—Firewall Fuselage Station 489 to 505 (Sheet 1 of 2)

Fuselage Structure

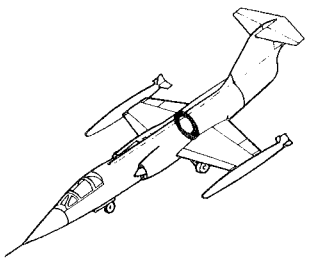

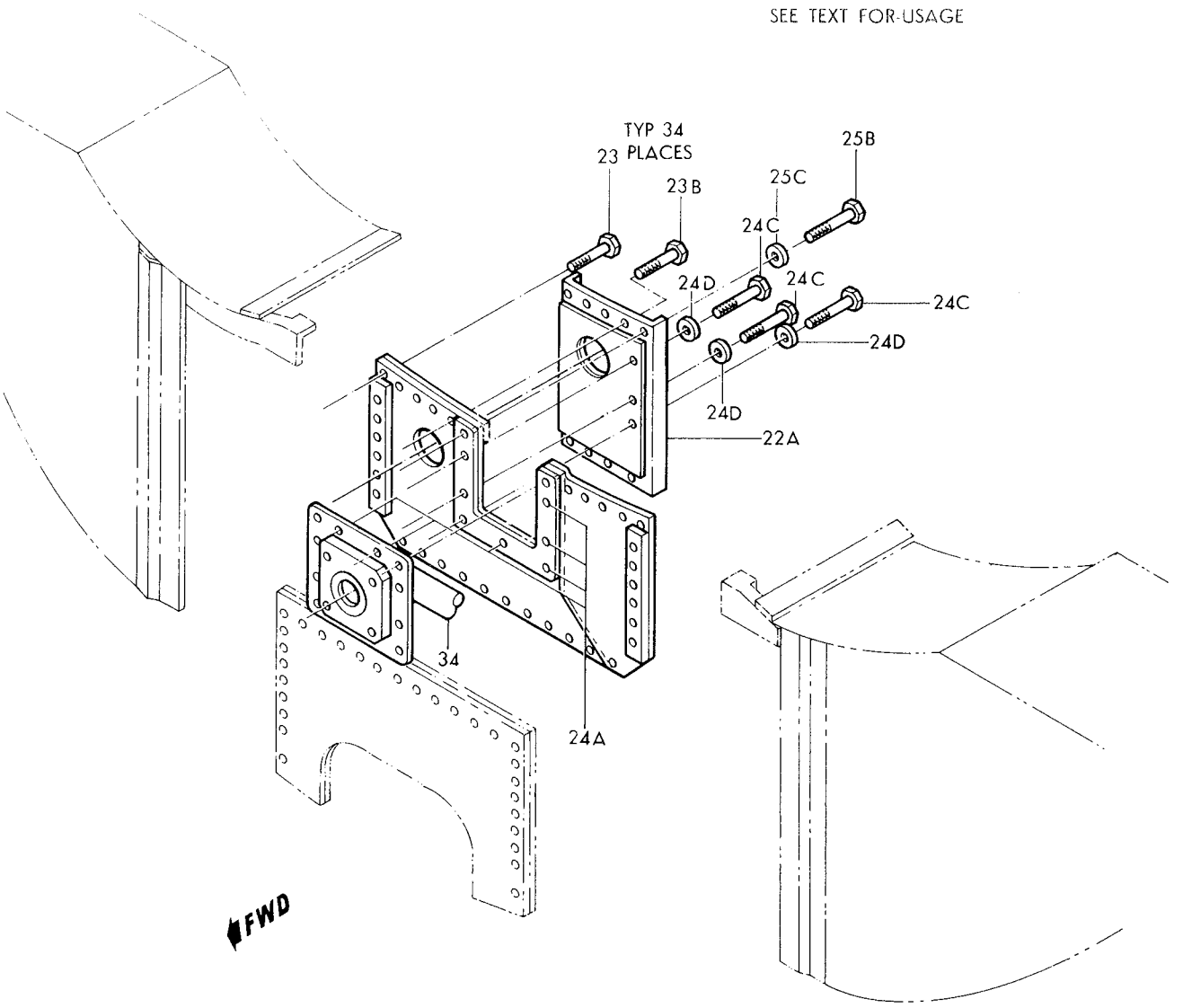

Figure 56-Firewall Fuselage Station 489 to 505 (Sheet 2 of 2)

Figura e particolare	NDR	DENOMINAZIONE 1 2 3 4 5 6 7	Quant.	Codice applicab.
		VENTRAL FIN COMPLETE		
57	851541-103	FIN INSTL, fwd ventral (NHA 849138-101)	1	
-1	851540-109	FIN ASSY, fwd ventral	1	
		Attaching Parts		
-2	MS20004-10	BOLT (96906)	1	
-3	MS20008-28	BOLT (96906)	1	
-4	MS20005-24	BOLT (96906)	1	
-5	NAS623-4-4	SCREW (80205)	1	
-6	MS20002C4	WASHER (96906)	1	
-7	MS20002C8	WASHER (96906)	1	
-8	MS20002C5	WASHER (96906)	1	
-8A	AN960D416	WASHER (88044)	1	
-9	NAS577-4A	NUT, self-locking, barrel (80205)	1	
-10	NAS578-4B	RETAINER, barrel nut (80205)	1	
-11	NAS577-8A	NUT, self-locking, barrel (80205)	1	
-12	NAS578-8B	RETAINER, barrel nut (80205)	1	
-13	NAS577-5A	NUT, self-locking, barrel (80205)	1	
-14	NAS578-5B	RETAINER, barrel nut (80205)	1	
-15	851538-101	LEADING EDGE, ventral fin	1	
-16	851539-101	BEAM, front ventral fin	1	
-17	768598-105	BEAM, rear ventral fin	1	
-18	851540-107	SEAL, ventral fin assy	1	
-19	767462-63	SEAL, ventral fin assy	1	
-20	767462-61	SEAL, ventral fin assy	1	
-21	767462-59	SEAL, ventral fin assy	1	
-22	767462-57	SEAL, ventral fin assy	1	
-23	772508-1	FAIRING ASSY, ventral fin fwd	1	
		Attaching Parts		
	NAS1203-2	SCREW (80205)	28	
-24	768430-7	SEAL, fwd ventral fin	1	
-24A	772007-1	DECAL, symmetry point	3	
	769834-3	FIN INSTL, aft ventral (complete with antenna) (NHA 849138-101)	1	
-25	769833-501	FIN ASSY, aft ventral *(see fig. 201)*	1	
		Attaching Parts		
-26	AN4-11A	BOLT (88044)	3	
-27	AN4-10A	BOLT (88044)	1	
-28	AN960D416	WASHER (88044)	4	
-29	769832-5	SHIM, aft ventral fin	1	
-30	769832-1	SHIM, aft ventral fin	1	
-31	769832-9	SHIM, aft ventral fin	1	
-32	SL40-428	NUT, self-locking, barrel (97393)	2	
-33	LS4893-4C	RETAINER, barrel nut (36659)	2	
-34	MS21042L4	NUT (96906)	1	
	767684-49	BOND ASSY, aft ventral fin	1	
-35	2752-048	NUT, self-locking, barrel (72962)	1	
-36	773383-1	RETAINER, barrel nut	1	
-37	768516-1	SEAL, aft ventral fin	1	
-38	768517-1	SEAL, aft ventral fin	1	
-42	767684-7	RIB, ventral fin	1	
-43	767684-9	RIB, ventral fin	1	
-44	767684-11	RIB, ventral fin	1	
-45	769835-1	SEAL, aft ventral fin	2	
-46	769836-1	SEAL, aft ventral fin	2	

Fuselage Structure

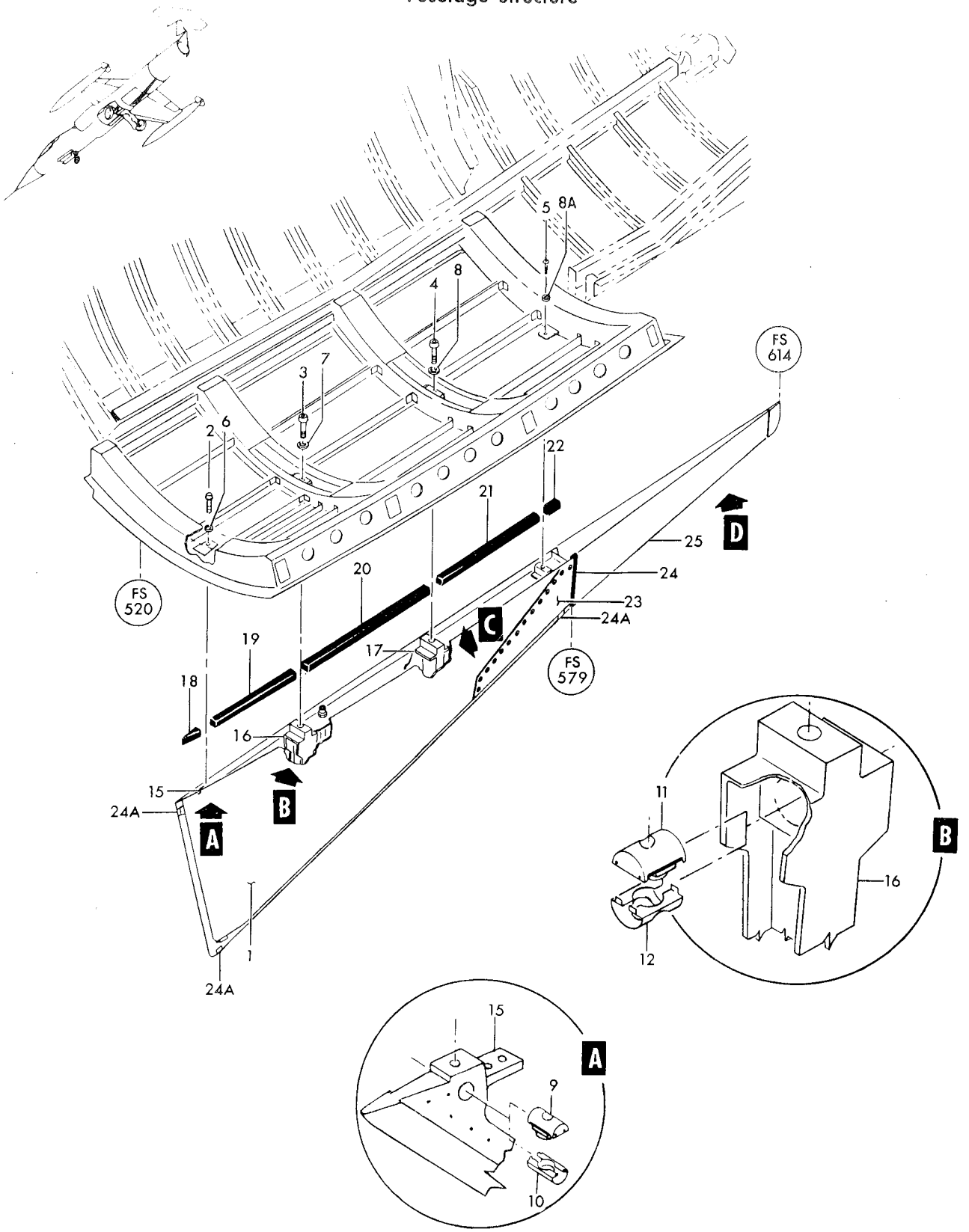

Figure 57 — Ventral Fin Complete (Sheet 1 of 2)

Fuselage Structure

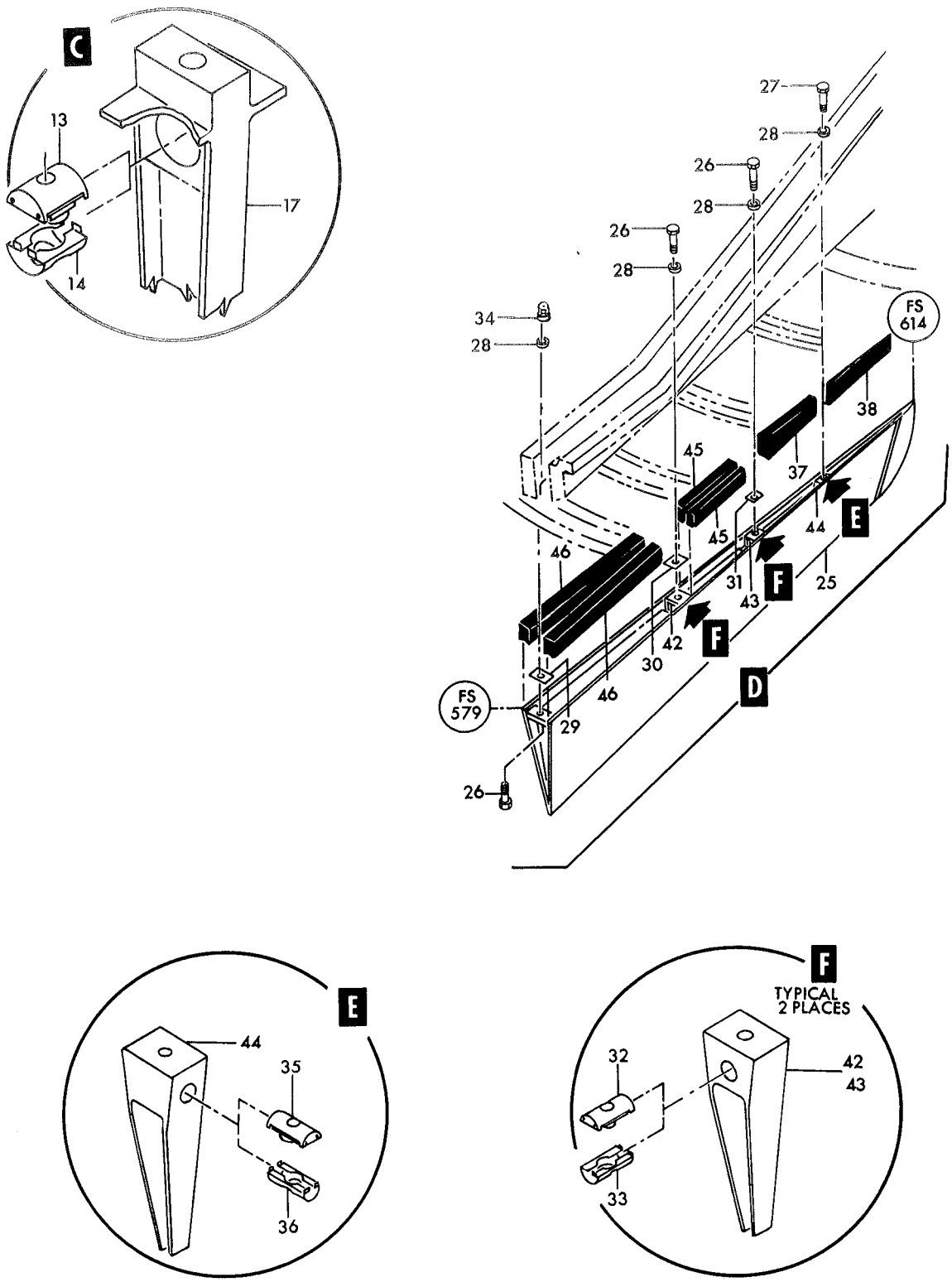

Figure 57—Ventral Fin Complete (Sheet 2 of 2)

Figura e particolare	NDR	DENOMINAZIONE 1 2 3 4 5 6 7	Quant.	Codice applicab.
		SPEED BRAKES		
58	760217L	FLAP INSTL, dive brake (NHA 849140-101)	1	6701-6740
	760217-107	FLAP INSTL, dive brake (NHA 849140-101)	1	6741-
	760217R	FLAP INSTL, dive brake (NHA 849140-101)	1	6701-6740
	760217-108	FLAP INSTL, dive brake (NHA 849140-101)	1	6741-
-1	760217-3L	FLAP ASSY, dive brake	1	
	760217-3R	FLAP ASSY, dive brake	1	
-2	750370	ROLLER, dive flap track	2	
-3	NAS460-1216	WASHER (80205)	2	
-4	AN960D1216	WASHER (88044)	2	
-5	NAS1022A12	NUT (80205)	2	
-6	726225	SPACER, dive flap track roller	2	
-7	MS15001-4	FITTING, (lub) (96096)	1	
-8	MS15001-1	FITTING, (lub) (96906)	4	
	760217-33	SHIM	1	
	760217-34	SHIM	1	
-9	MS21042L3	NUT (96906)	8	
-10	AN960D10	WASHER (88044)	8	
-11	NAS623-3-8	SCREW (80205)	8	
-12	762245L	FRAME ASSY, dive flap	1	
	762245R	FRAME ASSY, dive flap	1	
-13	726267-3	BUSHING, dive flap frame	2	
-14	726267-4	BUSHING, dive flap frame	2	
-15	760217-4L	SPOTWELD ASSY, dive flap	1	
	760217-4R	SPOTWELD ASSY, dive flap	1	
-16	MS21042L3	NUT (96906)	6	
-17	AN960D10	WASHER (88044)	6	
-18	NAS623-3-5	SCREW (80205)	6	
	LS2107-6-8	SHIM, dive flap frame (36659)	2	
	LS2107-12-8	SHIM, dive flap frame (36659)	3	
	760217-103	SHIM	2	
	760217-105	SHIM	2	
-19	MS21042L4	NUT (96906)	8	
-20	AN960D416	WASHER (88044)	8	
-21	NAS623-4-6	SCREW (80205)	8	
-22	MS27253-2	NAMEPLATE, identification and modification (96906)	1	
-23	762246L	BEAM, dive flap upper side	1	
	762246R	BEAM, dive flap upper side	1	
-24	762247L	BEAM, dive flap lower side	1	
	762247R	BEAM, dive flap lower side	1	
-25	761752	YOKE ASSY, dive flap (NHA 760217L) (NHA 760217-107) (NHA 760217R) (NHA 760217-108)	1	
-26	726079-3	BUSHING, dive flap yoke	2	
-27	MS15001-1	FITTING, lub (96906) (NHA 760217L) (NHA 760217-107) (NHA 760217R) (NHA 760217-108)	2	
-28	726229	LOCK, dive flap yoke pin (NHA 760217L) (NHA 760217-107) (NHA 760217R) (NHA 760217-108)	2	
		Attaching Parts		
-29	NAS623-3-5	SCREW (80205)	2	
	AN960D10	WASHER (88044)	4	
	MS21042L3	NUT (96906)	2	
-30	726227	PIN, dive flap cylinder (NHA 760217L) (NHA 760217R)	1	6701-6740
	726227-101	PIN, dive flap cylinder (NHA 760217-107) (NHA 760217-108)	1	6741-
-31	726228	LOCK, dive flap cylinder pin (NHA 760217L) (NHA 760217-107) (NHA 760217R) (NHA 760217-108)	1	
		Attaching Parts		
-32	NAS623-3-8	SCREW (80205)	1	
-33	AN960D10	WASHER (88044)	2	
-34	MS21042L3	NUT (96906)	1	

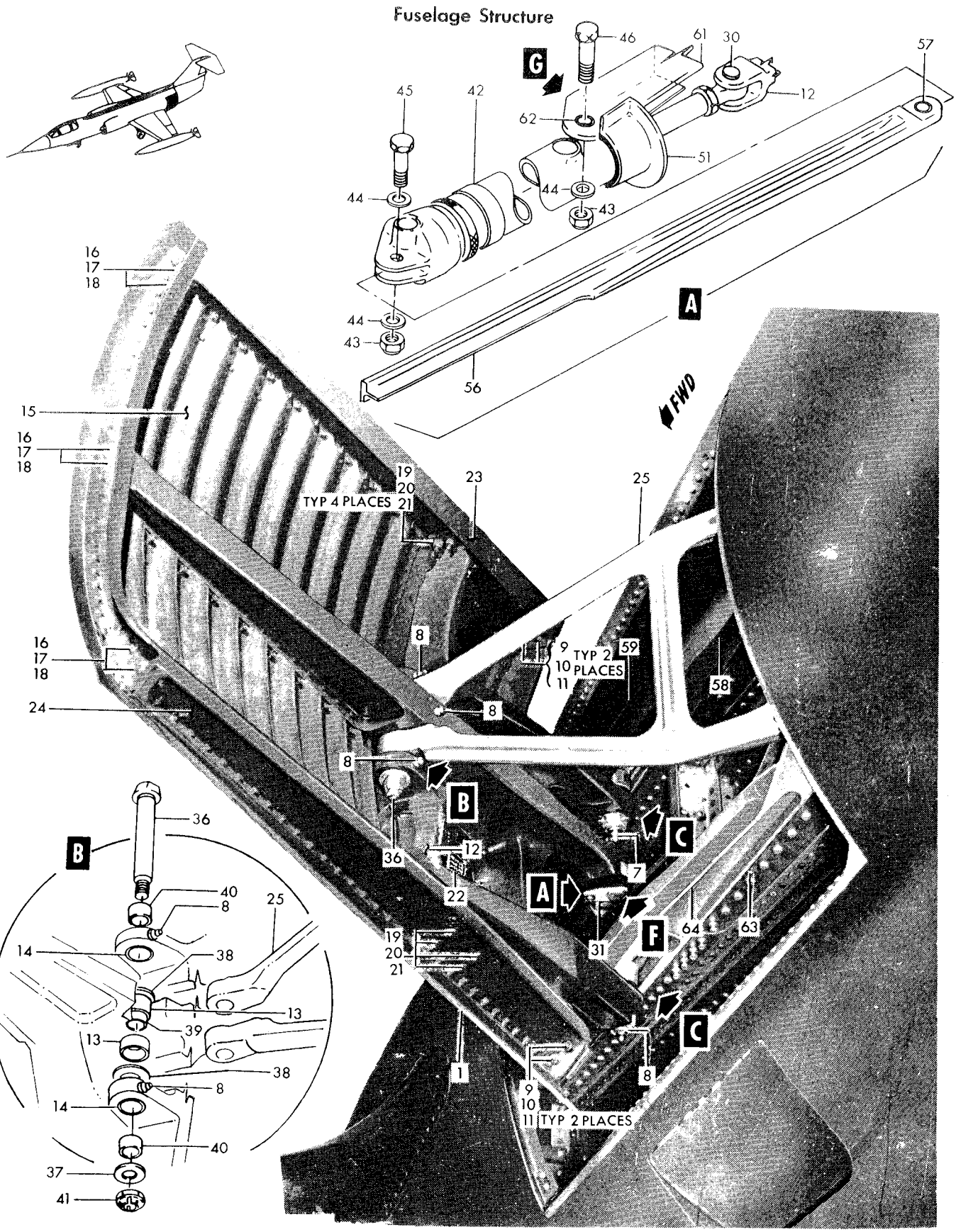

Figure 58—Speed Brakes (Sheet 1 of 2)

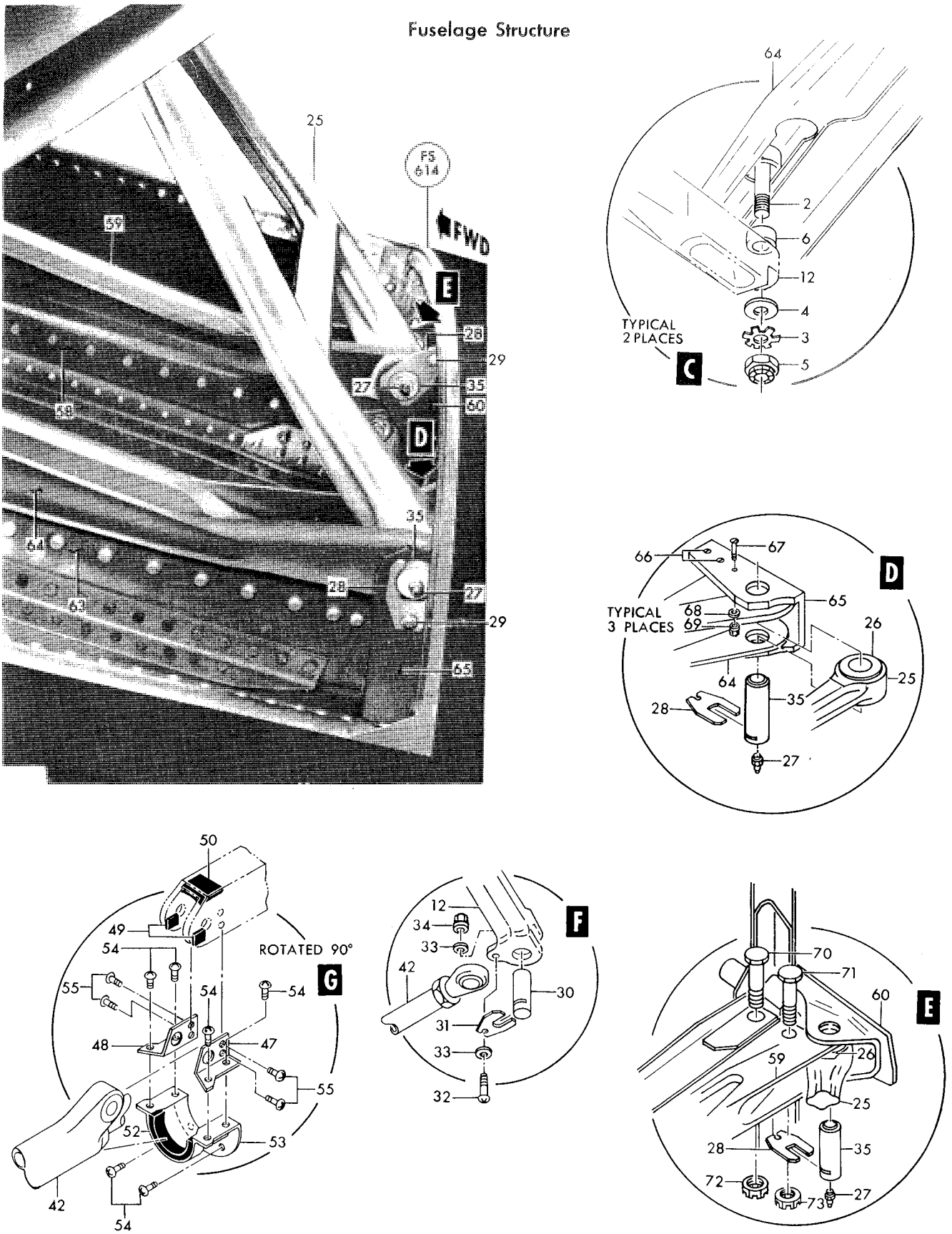

Figure 58—Speed Brakes (Sheet 2 of 2)

Figura e particolare	NDR	DENOMINAZIONE	Quant.	Codice applicab.
58	MS24665-304	COTTER PIN (96906) (NHA 760217L) (NHA 760217-107) (NHA 760217R) (NHA 760217-108)	1	
-35	726230	PIN, dive flap yoke (NHA 760217L) (NHA 760217-107) (NHA 760217R) (NHA 760217-108)	2	
-36	726231	BOLT, dive flap (NHA 760217L) (NHA 760217-107) (NHA 760217R) (NHA 760217-108)	1	
-37	726223	WASHER, dive flap (NHA 760217L) (NHA 760217-107) (NHA 760217R) (NHA 760217-108)	1	
-38	726224	WASHER, dive flap yoke (NHA 760217L) (NHA 760217-107) (NHA 760217R) (NHA 760217-108)	2	
-39	726226-3	SPACER, dive flap (NHA 760217L) (NHA 760217-107) (NHA 760217R) (NHA 760217-108)	1	
-40	726226-4	SPACER, dive flap (NHA 760217L) (NHA 760217-107) (NHA 760217R) (NHA 760217-108)	2	
-41	AN310-8	NUT (88044) (NHA 760217L) (NHA 760217-107) (NHA 760217R) (NHA 760217-108)	1	
	ASCT509T6-2	LOCKBOLT (29666)	36	
	ASCT509T6-4	LOCKBOLT (29666)	23	
	LCC6	COLLAR, lockbolt (29666)	59	
	784882-101	CYLINDER INSTL, dive flap LH *(see fig. 31 for reqd)*	REF	6701-6866
	784882-103	CYLINDER INSTL, dive flap LH *(see fig. 31 for reqd)*	REF	6867-
	784882-102	CYLINDER INSTL, dive flap RH *(see fig. 31 for reqd)*	REF	6701-6866
	784882-104	CYLINDER INSTL, dive flap RH *(see fig. 31 for reqd)*	REF	6867-
-42	1171L000-505	CYLINDER, aircraft dive flap system actuator (A0359) (75662) (Lockheed spec dwg 668088-101) (see T.O. 9H2-4-132-3) *(see fig. 126)*	1	6701-6866
	1171L000-507	CYLINDER, aircraft dive flap system actuator (A0359) (75662) (Lockheed spec dwg 668088-103) (see T.O. whn avail.) *(see fig. 126)*	1	6867-
-43	NAS1022A8	NUT (80205)	2	
-44	AN960D816	WASHER (88044)	3	
-45	NAS1108-18D	BOLT (80205)	1	
-46	NAS1108-38D	BOLT (80205) *(see fig. 95)*	1	
	767762-1	SEAL INSTL, dive flap cylinder fus sta 579 LH *(see fig. 31 for reqd)*	REF	
	767762-2	SEAL INSTL, dive flap cylinder fus sta 579 RH *(see fig. 31 for reqd)*	REF	
-47	767762-3	CLIP, dive flap cylinder *(see fig. 95)*	1	
-48	767762-4	CLIP, dive flap cylinder *(see fig. 95)*	1	
-49	767762-7	SEAL, dive flap cylinder	2	
-50	767762-9	SEAL, dive flap cylinder	1	
-51	767762-11	SEAL ASSY, dive flap cylinder	1	
-52	767762-5	SEAL, dive flap cylinder	1	
-53	767761-1	CAP, dive flap cylinder seal *(see fig. 95)*	1	
-54	NAS221-9	SCREW (80205)	6	
-55	NAS221-12	SCREW (80205)	4	
	AN960D10	WASHER (88044)	10	
	MS21042L3	NUT (96906)	8	
	761222-11L	SUPPORT INSTL, dive flap cylinder *(see fig. 31 for reqd)*	REF	
	761222-11R	SUPPORT INSTL, dive flap cylinder *(see fig. 31 for reqd)*	REF	
-56	761222-3L	SUPPORT ASSY, dive flap cylinder	1	
	761222-3R	SUPPORT ASSY, dive flap cylinder	1	
	761220L	CAP ASSY, dive flap cylinder support	1	
	761220R	CAP ASSY, dive flap cylinder support	1	
-57	726002-3	BUSHING, dive flap cylinder support	1	
	761349-105	STRUCTURE INSTL, dive flap LH *(see fig. 31 for reqd)*	REF	6701-6840
	761349-129	STRUCTURE INSTL, dive flap LH *(see fig. 31 for reqd)*	REF	6841-
	761349-111	STRUCTURE INSTL, dive flap RH *(see fig. 31 for reqd)*	REF	6701-6840
	761349-131	STRUCTURE INSTL, dive flap RH *(see fig. 31 for reqd)*	REF	6841-
	761349-107	STRUCTURE ASSY, dive flap LH	1	6701-6840
	761349-133	STRUCTURE ASSY, dive flap LH	1	6841-
	761349-125	STRUCTURE ASSY, dive flap RH	1	6701-6840
	761349-135	STRUCTURE ASSY, dive flap RH	1	6841-
-58	761464-3L	TRACK ASSY, dive flap upper	1	
	761464-3R	TRACK ASSY, dive flap upper	1	
-59	761131L	TRACK, upper flap	1	
	761131R	TRACK, upper flap	1	
-60	760932-501	FITTING INSTL, fus sta 614 bulkhead engine mount *(see fig. 251)*	1	

Figura e particolare	NDR	DENOMINAZIONE	Quant.	Codice applicab.
		1 2 3 4 5 6 7		
58	760932-502	FITTING INSTL, fus sta 614 bulkhead engine mount *(see fig. 251)*	1	
	761349-109	STRUCTURE ASSY, dive flap LH	1	6701-6840
	761349-137	STRUCTURE ASSY, dive flap LH	1	6841-
	761349-127	STRUCTURE ASSY, dive flap RH	1	6701-6840
	761349-139	STRUCTURE ASSY, dive flap RH	1	6841-
	761349-115	PANEL ASSY, back LH	1	
	761349-116	PANEL ASSY, back RH	1	
-61	761257	SUPPORT ASSY, dive flap cylinder *(see fig. 95)*	1	
-62	726002-4	BUSHING, dive flap cylinder support	2	
-63	761465-3L	TRACK ASSY, dive flap lower	1	
	761465-3R	TRACK ASSY, dive flap lower	1	
-64	761132L	TRACK, lower flap	1	
	761132R	TRACK, lower flap	1	
-65	761390L	FITTING, lower	1	
	761390R	FITTING, lower	1	
-66	NAS623-4-5	SCREW (80205)	2	
-67	NAS623-4-9	SCREW (80205)	1	
-68	AN960D416	WASHER (88044)	3	
-69	MS21042L4	NUT (96906)	3	
	761464L	TRACK INSTL, upper dive flap *(see fig. 31 for reqd)*	REF	
	761464R	TRACK INSTL, upper dive flap *(see fig. 31 for reqd)*	REF	
-70	NAS1110-14D	BOLT (80205)	1	
-71	NAS1108-10D	BOLT (80205)	1	
-72	AN320-10	NUT (88044)	1	
-73	AN320-8	NUT (88044)	1	
	MS24665-355	COTTER PIN (96906)	1	

Figura e particolare	NDR	1 2 3 4 5 6 7 DENOMINAZIONE	Quant.	Codice applicab.
		DORSAL STRUCTURE AND ACCESS DOORS		
59- 1	784282-1	. DORSAL ASSY, electronic compartment cover *(see fig. 47 for reqd)*	REF	
- 2	784123-109	. COVER ASSY, ammunition/fuel compartment *(see fig. 49 for reqd)*	REF	
	760909-3	. DOOR INSTL, mid fuselage dorsal bleed air *(see fig. 60 for reqd)*	REF	
- 3	760900	. . DOOR, dorsal access	1	
		Attaching Parts		
	NAS517-3-2	. . SCREW (80205)	8	
		——————✲——————		
	760909-5	. DUCT INSTL, dorsal bleed air *(see fig. 60 fir reqd)*	REF	
- 4	760904	. . SKIN ASSY, dorsal	1	
- 5	760901-17	. . . FORMER ASSY, dorsal door support	2	
- 6	760901-19	. . . FORMER ASSY, dorsal door support	1	
- 7	760899-4	. . . FORMER, dorsal	1	
	760909-4	. . DOOR INSTL, forward body dorsal bleed air duct	1	
- 8	760900	. . . DOOR, dorsal access	1	
		Attaching Parts		
	NAS517-3-2	. . . SCREW (80205)	8	
		——————✲——————		
	768224-1	. DOOR INSTL, dorsal bleed air *(see fig. 152 for reqd)*	REF	
	768224-3	. DOOR INSTL, dorsal bleed air *(see fig. 152 for reqd)*	REF	
- 9	760900	. . DOOR, dorsal access	1	
		Attaching Parts		
	NAS517-3-2	. . SCREW (80205)	8	
		——————✲——————		
	770726-1	. DOOR INSTL, dorsal access *(see fig. 60 for reqd)*	REF	
	770726-3	. . DOOR ASSY, dorsal access	1	
-10	770726-9	. . . DOOR ASSY, dorsal access	1	
		Attaching Parts		
-10A	NAS517-3-1	. . . SCREW (80205)	16	
-10B	NAS1203-2	. . . SCREW (80205)	8	
		——————✲——————		
-11	760907	. SKIN ASSY, dorsal *(see fig. 60 for reqd)*	REF	
-12	760901-17	. . FORMER ASSY, dorsal door support	2	
-13	761784	. DOOR ASSY, main tank forward access *(see fig. 60 for reqd)*	REF	
-14	760908-4	. . SKIN ASSY, dorsal	1	
-15	760901-17	. . . FORMER ASSY, forsal door support	2	
-16	760905	. SKIN ASSY, dorsal *(see fig. 60 for reqd)*	REF	
-17	760901-17	. . FORMER ASSY, dorsal door support	1	
-18	760901-25	. . FORMER ASSY, dorsal door support	1	
-19	760908-101	. SKIN ASSY, dorsal *(see fig. 60 for reqd)*	REF	
	760908-103	. . SKIN, dorsal	1	
-20	760901-25	. . FORMER ASSY, dorsal door support	2	
-21	761783	. DOOR ASSY, main tank aft *(see fig. 60 for reqd)*	REF	
-22	760908-3	. . SKIN ASSY, dorsal	1	
-23	760901-17	. . . FORMER ASSY, dorsal door support	2	
-24	760908-7	. SKIN ASSY, dorsal *(see fig. 60 for reqd)*	REF	
-25	760901-21	. . FORMER ASSY, dorsal door support	1	
-26	760901-23	. . FORMER ASSY, dorsal door support	1	
-27	760908-5	. SKIN ASSY, dorsal *(see fig. 60 for reqd)*	REF	
-28	760901-21	. . FORMER ASSY, dorsal door support	1	
-29	760901-23	. . FORMER ASSY, dorsal door support	1	
-30	777655-3	. SKIN ASSY, dorsal *(see fig. 152 for reqd)*	REF	
	760909-4	. . DOOR INSTL, forward body dorsal bleed air duct	1	
-31	760900	. . . DOOR, dorsal access	1	
		Attaching Parts		
	NAS517-3-2	. . . SCREW (80205)	8	
		——————✲——————		
-32	770727-7	. . FORMER, dorsal skin	1	
-33	777219-503	. DOOR ASSY, dipstick access *(see fig. 248 for reqd)*	REF	
	777211-1	. DORSAL INSTL, fus sta 518 to 577 *(see fig. 31 for reqd)*	REF	

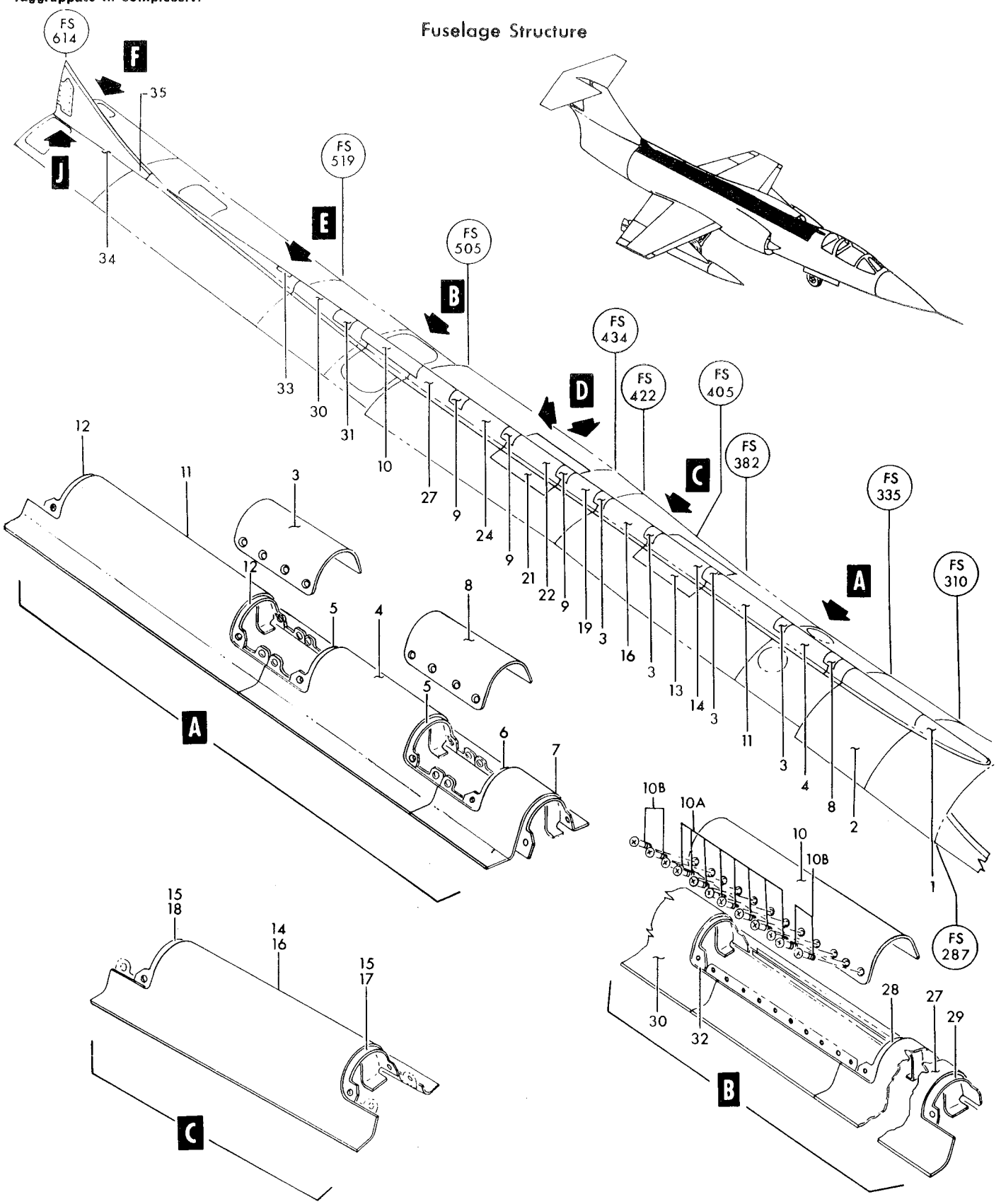

Figure 59—Dorsal Structure and Access Doors (Sheet 1 of 2)

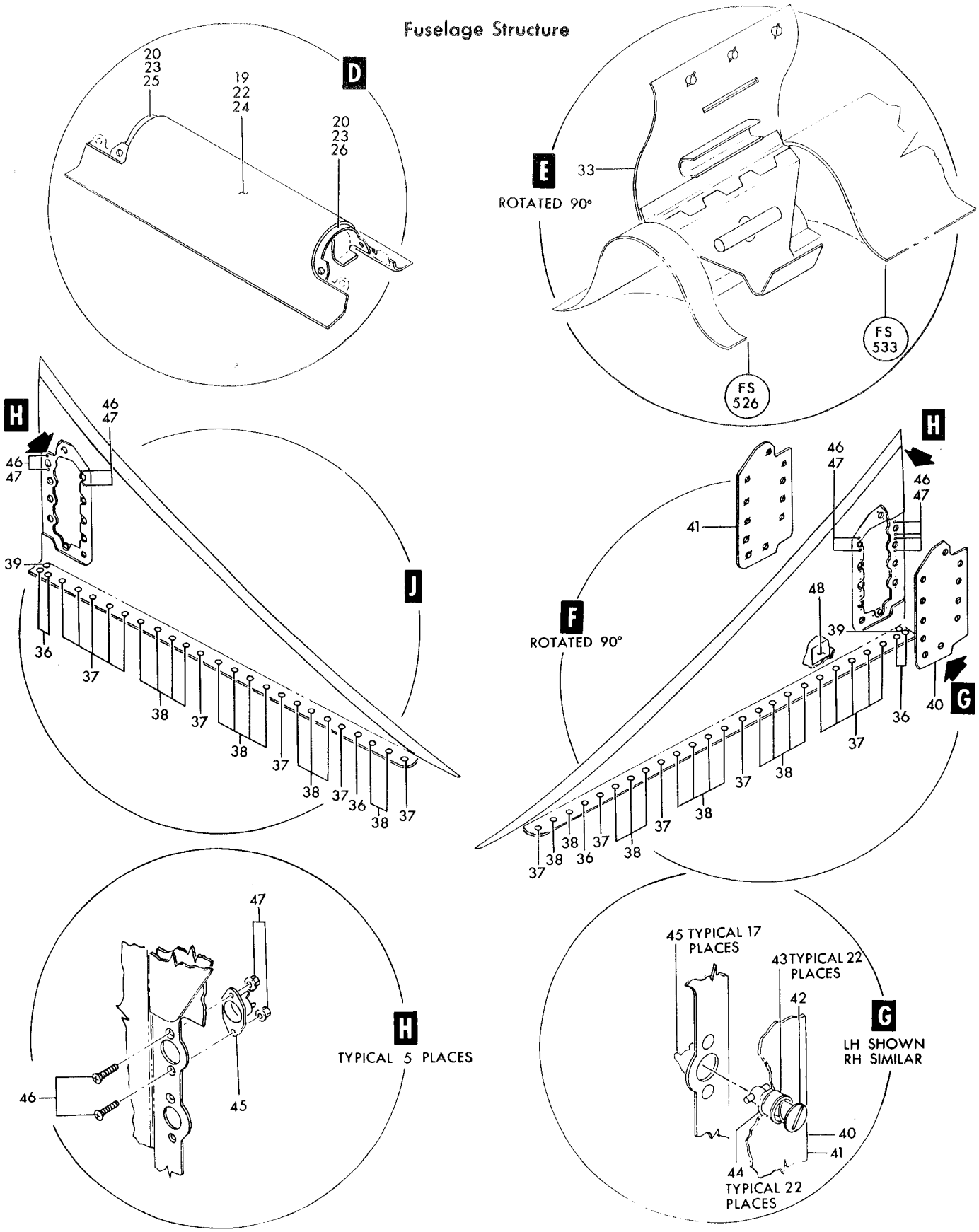

Figure 59— Dorsal Structure and Access Doors (Sheet 2 of 2)

Figura e particolare	NDR	DENOMINAZIONE 1 2 3 4 5 6 7	Quant.	Codice applicab.
59	777211-13	DORSAL ASSY, fus sta 518 to 577	1	
-34	761411-101	DORSAL INSTL, forward	1	6701-6765
	761411-109	DORSAL INSTL, forward	1	6766-
-35	761411-105	DORSAL ASSY, forward	1	6701-6765
	761411-111	DORSAL ASSY, forward	1	6766-
		Attaching Parts		
-36	NAS1203-4	SCREW (80205)	6	
-37	NAS1203-3	SCREW (80205)	18	
-38	NAS1203-2	SCREW (80205)	26	
-39	NAS623-3-6	SCREW (80205)	2	
-40	761411-103	DOOR ASSY, forward dorsal	1	6701-6765
	761411-113	DOOR ASSY, forward dorsal	1	6766-
-41	761411-18	DOOR ASSY, forward dorsal	1	6701-6765
	761411-115	DOOR ASSY, forward dorsal	1	6766-
		Attaching Parts		
-42	4002-2	STUD, camloc fastener (71286)	11	
-43	4002G	GROMMET, camloc fastener (71286)	11	
-44	R4G	RING, camloc fastener snap (71286)	11	
-45	214-16	RECEPTACLE, camloc fastener (71286)	22	
		Attaching Parts		
-46	AN507-632R6	SCREW (88044)	10	
-47	MS21042L06	NUT (96906)	10	
-48	MS27253-1	NAMEPLATE (96906)	1	

Figura e particolare	NDR	DENOMINAZIONE 1 2 3 4 5 6 7	Quant.	Codice applicab.
		ACCESS COVERS AND DOORS UPPER FUSELAGE		
60	783031-1	. DOOR INSTL, canopy torque tube access *(see fig. 37 for reqd)*	REF	
- 1	780622-1	. . DOOR ASSY, torque tube access	1	
		Attaching Parts		
- 2	NAS517-3-2	. . SCREW (80205)	8	
		——————✲——————		
- 3	780621-3	. . GASKET, torque tube access door	1	
- 4	760146-41	. COVER, fuselage station 252 LH cockpit structure (probe light receptacle) *(see fig. 36 for reqd)*	REF	
	783315-501	. DOOR INSTL, fuselage station 322 to 335 rigging pin and switch access LH *(see fig. 30 for reqd)*	1	
- 5	760339-6	. . COVER, fuselage station 335 rigging pin access door	1	
		Attaching Parts		
	NAS1203-2	. . SCREW (80205)	10	
		——————✲——————		
- 6	779932-1	. . PAN ASSY, fuselage station 322 to 328 switch access	1	
		Attaching Parts		
	NAS623-3-3	. . SCREW (80205)	5	
		——————✲——————		
	AN960-10L	. . WASHER (88044)	5	
- 7	779933-501	. . DOOR ASSY, fuselage station 322 to 328 switch access	1	
- 8	793257-1	. . . POSITIONER, precheck switch	1	
		Attaching Parts		
	NAS517-3-3	. . . SCREW (80205)	3	
	AN960D10	. . . WASHER (88044)	3	
	MS21042L3	. . . NUT (96906)	3	
		——————✲——————		
- 9	772513-1	. . . HINGE, lower switch panel access door half	1	
-10	779933-101	. . . PIN, access door hinge	1	
-11	726280-3	. . . SPRING, access door hinge	1	
-12	777089-3	. . . HINGE, upper switch panel access door half	1	
	779933-3	. . . SPOTWELD ASSY, switch access	1	
-13	779933-5	. . . . DOOR, switch access	1	
		Attaching Parts		
	4002-4	. . . . STUD, camloc fastener (71286)	3	
	4002H	. . . . GROMMET, camloc fastener (71286)	3	
	R4G	. . . . RING, camloc fastener snap (71286)	3	
		——————✲——————		
	766642-1	. DOOR INSTL, fuselage station 328 rigging pin access RH *(see fig. 30 for reqd)*	REF	
-14	766642-7	. . COVER, fuselage station 328 rigging pin access	1	
		Attaching Parts		
-15	NAS517-3-3	. . SCREW (80205)	14	
-16	NAS463XDD10	. . SHIM (80205)	6	
		——————✲——————		
-17	774159-103	. COVER ASSY, fuselage station 335 to 358 auxiliary fuel tank *(see fig. 152 for reqd)*	REF	
		Attaching Parts		
-18	NAS623-3-5	. SCREW (80205)	4	
	NAS1203-3	. SCREW (80205)	58	
		——————✲——————		
-20	760211-47	. . DOOR, fuel tank cover	2	
		Attaching Parts		
	NAS1203-2	. . SCREW (80205)	14	
		——————✲——————		
	760909-5	. . DUCT INSTL, dorsal bleed air *(see fig. 59)*	1	
	760214-503	. COVER INSTL, fuselage station 358 to 422 fuel tank (NHA 849140-101)	1	
	760214-75	. . COVER ASSY, fuselage station 358 to 422 fuel tank	1	
	774369-501	. . . SWITCH INSTL, forward main fuel tank pressure *(see fig. 102)*	1	
	760909-6	. . . DUCT INSTL, dorsal bleed air *(see fig. 152)*	1	
	760909-3	. . . . DOOR INSTL, mid fuselage dorsal bleed air (1 reqd on 849138-101 and 1 reqd on 849140-101) *(see fig. 59 and 152)*	4	

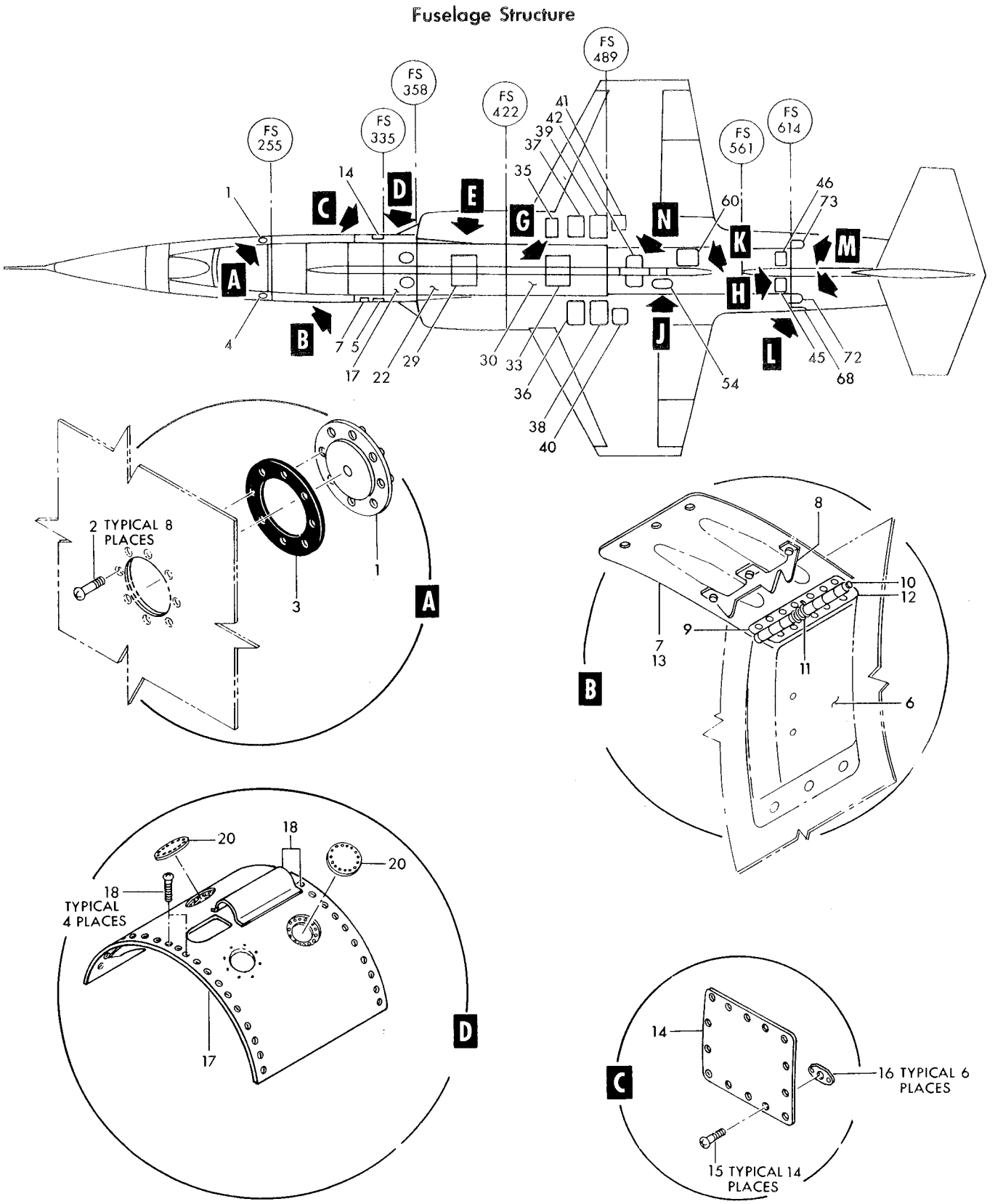

Figure 60—Access Covers and Doors Upper Fuselage (Sheet 1 of 3)

Fuselage Structure

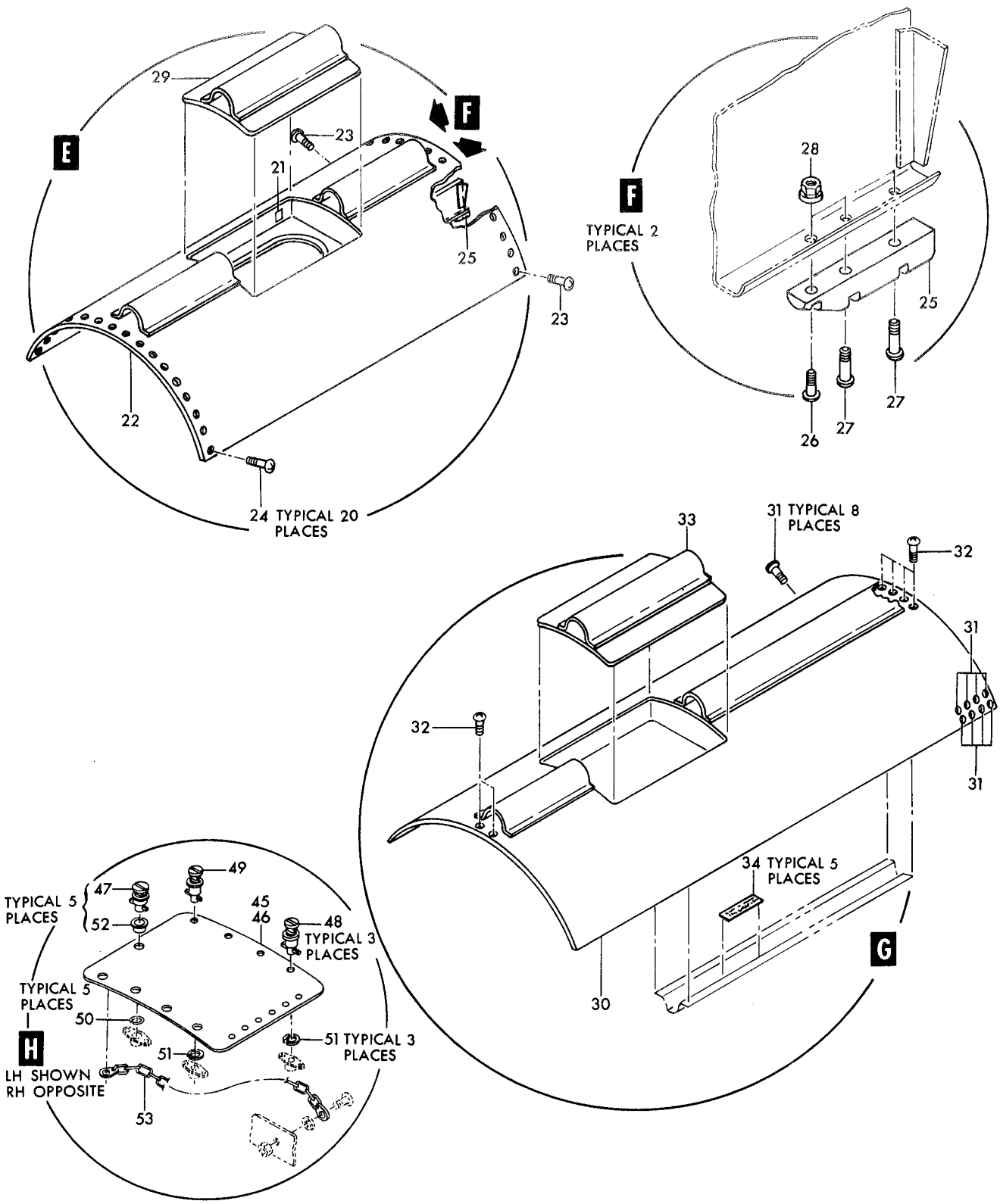

Figure 60—Access Covers and Doors Upper Fuselage (Sheet 2 of 3)

Fuselage Structure

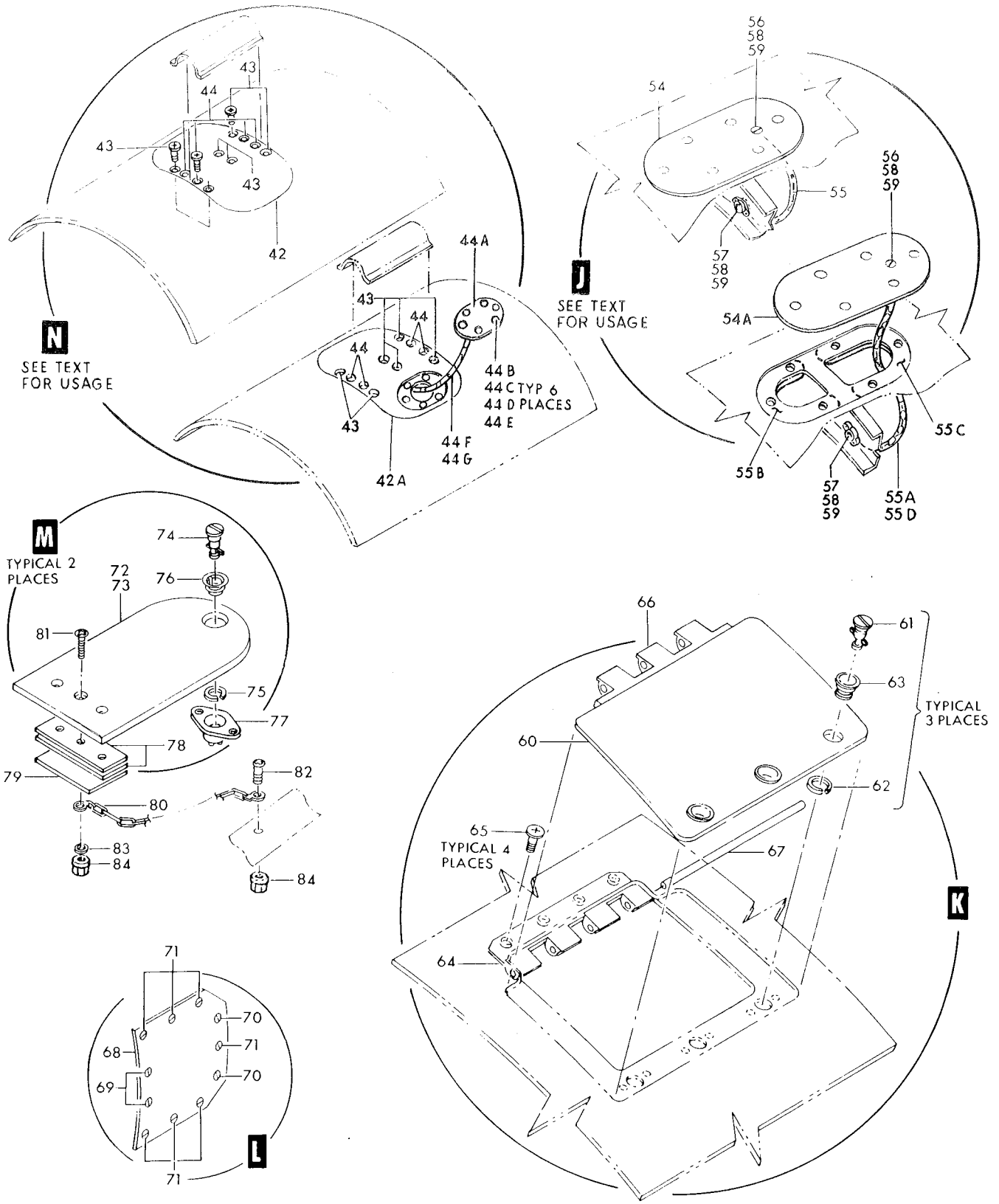

Figure 60—Access Covers and Doors Upper Fuselage (Sheet 3 of 3)

Figura e particolare	NDR	DENOMINAZIONE	Quant.	Codice applicab.
		1 2 3 4 5 6 7		
60	769580-5	ATTACHMENT INSTL, special stores forward main fuel tank cover *(see fig. 104)*	1	
-21	MS27253-2	NAMEPLATE, (96906)	1	
		Attaching Parts		
	AN515-3R4	SCREW (88044)	4	
	AN936A3	WASHER (88044)	4	
	AN340-3	NUT (88044)	4	
-22	760214-71	COVER ASSY, fuel tank *(see fig. 102)*	1	
		Attaching Parts		
-23	NAS517-4-5	SCREW (80205)	2	
	NAS1203-4	SCREW (80205)	96	
-24	NAS1203-3	SCREW (80205)	20	
	760905	SKIN ASSY, dorsal *(see fig. 59)*	1	
	760907	SKIN ASSY, dorsal *(see fig. 59)*	1	
-25	776418-1	GUARD, fuel tank cover	2	
		Attaching Parts		
-26	NAS623-3-4	SCREW (80205)	1	
-27	NAS623-3-9	SCREW (80205)	2	
-28	MS21042L3	NUT (96906)	3	
-29	761784	DOOR ASSY, main tank fwd access *(see fig. 59)*	1	
		Attaching Parts		
	NAS517-3-2	SCREW (80205)	30	
	776893-111	COVER INSTL, fuselage station 422 to 489 fuel tank (NHA 849140-101)	1	
-30	776893-117	COVER ASSY, fuel tank	1	
		Attaching Parts		
-31	NAS517-4-4	SCREW (80205)	16	
-32	NAS623-3-4	SCREW (80205)	6	
	NAS517-3-4	SCREW (80205)	114	
	NAS1203-7	SCREW (80205)	50	
	764361-5	TANK ATTACHMENT INSTL, main aft fuel upper *(see fig. 108)*	1	
	768224-5	DUCT INSTL, dorsal bleed air *(see fig. 152)*	1	
	776893-119	COVER ASSY, fuel tank	1	
	760908-5	SKIN ASSY, dorsal *(see fig. 59)*	1	
	760908-101	SKIN ASSY, dorsal *(see fig. 59)*	1	
	760908-7	SKIN ASSY, dorsal *(see fig. 59)*	1	
-33	761783	DOOR ASSY, main tank aft *(see fig. 59)*	1	
		Attaching Parts		
	NAS517-3-2	SCREW (80205)	30	
	769261-1	RETAINER INSTL, fuselage station 422 to 489 aft fuel tank LH (NHA 849140-101)	1	
	769261-501	RETAINER INSTL, fuselage station 422 to 489 aft fuel tank RH (NHA 849140-101)	1	
-34	727371-1	DECAL, bolt torque (NHA 769261-501 requires a qty. of 4)	5	
	761089	COVER INSTL, leading edge flap switch *(see fig. 31 for reqd)*	REF	
-35	761089-9	COVER ASSY, leading edge flap switch	1	
		Attaching Parts		
	NAS1203-2	SCREW (80205)	6	
	761086L	DOOR INSTL, saddle tank access *(see fig. 31 for reqd)*	REF	
	761086R	DOOR INSTL, saddle tank access *(see fig. 31 for reqd)*	REF	
-36	761086-9	DOOR ASSY, saddle tank access LH	1	
-37	761086-10	DOOR ASSY, saddle tank access RH	1	
		Attaching Parts		
	NAS517-3-3	SCREW (80205)	34	
	761087L	DOOR INSTL, saddle tank access *(see fig. 31 for reqd)*	REF	
	761087R	DOOR INSTL, saddle tank access *(see fig. 31 for reqd)*	REF	

Figura e particolare	NDR	DENOMINAZIONE	Quant.	Codice applicab.
60-38	761087-9	DOOR ASSY, saddle tank access LH	1	
-39	761087-10	DOOR ASSY, saddle tank access RH	1	
		Attaching Parts		
	NAS517-3-3	SCREW (80205)	34	
		✲		
	761088-501	DOOR INSTL, fuselage station 489 to 505 controls access LH *(see fig. 31 for reqd)*	REF	
	761088R	DOOR INSTL, fuselage station 489 to 505 controls access RH *(see fig. 31 for reqd)*	REF	
-40	761088-11	DOOR ASSY, controls access LH	1	
		Attaching Parts		
	NAS1203-3	SCREW (80205)	28	
		✲		
-41	761088-12	DOOR ASSY, controls access RH	1	
		Attaching Parts		
	NAS1203-3	SCREW (80205)	28	
		✲		
	784962-1	A. DOOR INSTL, top fuselage station 489 to 505 fuel valve access *(see fig. 31 for reqd)*	REF	6701-6815
	852211-101	B. DOOR INSTL, top fuselage station 489 to 505 fuel valve access *(see fig. 31 for reqd)*	REF	6816-
	770731-1	COLLAR, dorsal air duct support *(see fig. 152)*	2	
	770974-1	DUCT ASSY, dorsal bleed air *(see fig. 152)*	1	
	4439-32	RING, rigid tube connector (98159) *(see fig. 152)*	1	
-42	784962-3	A. DOOR ASSY, fuel valve access (Modified and reidentified to 852211-103 per AA.1F-104-OT-764)	1	6701-6815
-42A	852211-103	B. DOOR ASSY, fuel valve access (Supersedes 784962-3 per AA.1F-104-OT-764)	1	6816-
		Attaching Parts		
	NAS1203-3	SCREW (80205)	50	
-43	NAS623-3-3	SCREW (80205)	6	
-44	NAS623-3-5	SCREW (80205)	4	
		✲		
	770726-1	DOOR INSTL, dorsal access *(see fig. 59)*	1	
	852211-111	B. COVER ASSY, fuel valve access	1	
-44A	852211-119	B. COVER, fuel valve access	1	
-44B	4002-3	B. STUD camloc (71286)	6	
-44C	244-16	B. RECEPTACLE, camloc (71286)	6	
-44D	4002G	B. GROMMET, camloc (71286)	6	
-44E	R4G	B. RING, snap (71286)	6	
-44F	RS106-80	B. CHAIN ASSY, access cover (86831)	1	
-44G	852211-121	B. TUBE, fuel valve access	1	
	761066-3L	DOOR INSTL, fuselage station 614 control disconnect *(see fig. 31 for reqd)*	REF	
	761066-3R	DOOR INSTL, fuselage station 614 control disconnect *(see fig. 31 for reqd)*	REF	
-45	761066-4L	DOOR ASSY, fuselage station 614 control disconnect	1	
-46	761066-4R	DOOR ASSY, fuselage station 614 control disconnect	1	
		Attaching Parts		
-47	4002-2	STUD (71286)	5	
-48	2700-3	STUD, camloc fastener (71286)	3	
-49	2700-5	STUD, camloc fastener (71286)	1	
-50	R4G	RING, camloc fastener snap (71286)	5	
-51	2600SW2	WASHER, camloc fastener split (71286)	4	
-52	4002G	GROMMET, camloc fastener (71286)	5	
		✲		
-53	761066-13	CHAIN, control disconnect door	1	
		Attaching Parts		
	AN515-4R4	SCREW (88044)	1	
	MS21042L04	NUT (96906)	1	
		✲		
	766936-1	C. DOOR INSTL, dual pressure regulator inspection *(see fig. 31 for reqd)*	REF	6701-6865
	852404-101	D. DOOR INSTL, dual pressure regulator inspection *(see fig. 31 for reqd)*	REF	6866-
-54	766936-5	C. DOOR, dual pressure regulator inspection	1	6701-6865
	852404-103	D. DOOR ASSY, dual pressure regulator inspection	1	6866-
-54A	852404-107	D. DOOR, dual pressure regulator inspection	1	6866-

Figura e particolare	NDR	1 2 3 4 5 6 7	DENOMINAZIONE	Quant.	Codice applicab.
60			Attaching Parts		
	2700-3	D. . .	STUD, camloc fastener (71286)	6	6866-
	NAS1203-2	C. .	SCREW (80205)	6	6701-6865
-55	766936-7	C. .	CHAIN, dual pressure regulator inspection door	1	6701-6865
-55A	852404-113	D. .	CHAIN, dual pressure regulator inspection door	1	6866-
-55B	852404-109	D. .	SHIM, dual pressure regulator inspection door	1	6866-
-55C	852404-111	D. .	SHIM, dual pressure regulator inspection door	1	6866-
-55D	852404-115	D. .	TUBING, dual pressure regulator inspection door	1	6866-
			Attaching Parts		
-56	AN507-440R6	. .	SCREW (88044) (NHA 766936-1) (NHA 852404-103)	1	
-57	AN515-4R6	. .	SCREW (88044)	1	
-58	AN960D4	. .	WASHER (88044) (1 on 766936-1 and 1 on 852404-103)	2	
-59	MS21042L04	. .	NUT (96906) (1 on 766936-1 and 1 on 852404-103)	2	
	777227-1	.	DOOR INSTL, oil tank access *(see fig. 31 for reqd)*	REF	
-60	777227-3	. .	DOOR ASSY, oil tank access	1	
			Attaching Parts		
-61	4002-3	. .	STUD, camloc fastener (71286)	3	
-62	R4G	. .	RING, camloc fastener snap (71286)	3	
-63	4002G	. .	GROMMET, camloc fastener (71286)	3	
-64	777225-1	. . .	HINGE, oil tank upper	1	
			Attaching Parts		
-65	NAS517-3-2	. . .	SCREW (80205)	4	
-66	777226-1	. . .	HINGE, oil tank lower	1	
-67	777227-7	. . .	PIN, hinge	1	
	784751-1	.	DOOR INSTL, aft fuselage electrical disconnect *(see fig. 31 for reqd)*	REF	
-68	784751-3	. .	DOOR ASSY, aft fuselage electrical disconnect	1	
			Attaching Parts		
-69	4002-5	. .	STUD, camloc fastener (71286)	2	
-70	2700-6	. .	STUD, camloc fastener (71286)	2	
-71	2700-4	. .	STUD, camloc fastener (71286)	7	
	R4G	. .	RING, camloc fastener snap (71286)	2	
	4002G	. .	GROMMET, camloc fastener (71286)	2	
	AN515-4R4	. .	SCREW (door chain) (88044)	1	
	MS21042L04	. .	NUT (door chain) (96906)	1	
	784789-1	. .	FITTING, aft fuselage electrical disconnect door	1	
	784789-3	. .	FITTING, aft fuselage electrical disconnect door	1	
-72	783502-11	.	DOOR ASSY, upper longeron *(see fig. 45 for reqd)*	REF	
-73	783502-12	.	DOOR ASSY, upper longeron *(see fig. 45 for reqd)*	REF	
			Attaching Parts		
-74	4002-2	.	STUD, camloc fastener (71286)	1	
-75	R4G	.	RING, camloc fastener snap (71286)	1	
-76	4002G	.	GROMMET, camloc fastener (71286)	1	
-77	214-16	.	RECEPTACLE, camloc fastener (71286)	1	
	783502-35	. .	COVER, upper longeron	1	
	783502-36	. .	COVER, upper longeron	1	
-78	783502-39	. .	FILLER, upper longeron	2	
-79	783502-37	. .	CATCH, upper longeron	1	
-80	760936-24	. .	CHAIN, upper longeron	1	
			Attaching Parts		
-81	AN507-440R8	. .	SCREW (88044)	1	
-82	AN515-4R4	. .	SCREW (88044)	1	
-83	AN960D4	. .	WASHER (88044)	1	
-84	MS21042L4	. .	NUT (96906)	2	

A - Removed per AA.1F-104-OT-764
B - Reqd per AA.1F-104-OT-764
C - Removed per AA.1F-104-OT-792
D - Reqd per AA.1F-104-OT-792

Figura e particolare	NDR	1 2 3 4 5 6 7 DENOMINAZIONE	Quant.	Codice applicab.
		ACCESS COVERS AND DOORS LOWER FUSELAGE		
61	786197-1	. DOOR INSTL, adapter access fuselage station 244 to 255 *(see fig. 36 for reqd)*	REF	
- 1	786197-3	. . SKIN, adapter access fuselage station 244 to 255	1	
		Attaching Parts		
- 2	NAS1203-2	. . SCREW (80205)	19	
- 3	NAS517-4-4	. . SCREW (80205)	2	
- 4	NAS517-4-3	. . SCREW (80205)	15	
- 5	NAS517-4-2	. . SCREW (80205)	7	
- 6	NAS517-3-3	. . SCREW (80205)	8	
- 7	NAS517-3-2	. . SCREW (80205)	5	
	766637-3	E. PANEL INSTL, fuselage station 305 to 335 access (NHA 849141-101)	1	6701-6815
	766637-101	F. PANEL INSTL, fuselage station 305 to 335 access (NHA 849141-101)	1	6816-
- 8	764726-503	E. . DOOR ASSY, transformer-rectifier access	1	6701-6815
	764726-3	E. . . WELD ASSY, transformer-rectifier access	1	6701-6815
	852190-101	F. . DOOR INSTL, transformer-rectifier access	1	
- 8A	852190-103	F. . . DOOR ASSY, trasformer-rectifier access	1	
	852190-105	F. . . . WELD ASSY, transformer-rectifier access	1	
- 8B	852196-101	F. . . LIGHT INSTL, fuselage station 305 to 335 lower navigation *(see fig. 198)*	1	
		Attaching Parts		
	NAS1203-2	. . . SCREW (80205)	27	
- 9	774958-1	C. DOOR ASSY, fuselage station 315 to 324 case clean out *(see fig. 230 for reqd)*	REF	6701-6740
	774958-101	D. DOOR ASSY, fuselage station 315 to 324 case clean out *(see fig. 230 for reqd)*	REF	
	850248-101	. DOOR INSTL, fuselage station 340 to 352 external stores electrical access (RH only) *(see fig. 30 for reqd)*	REF	
-10	783952-3	. . DOOR, fuselage station 340 to 352 external stores electrical access	1	
		Attaching Parts		
-11	NAS1203-4	. . SCREW (80205)	10	
-12	NAS1203-2	. . SCREW (80205)	22	
	850247-101	. DOOR INSTL, fuselage station 340 to 352 LH *(see fig. 30 for reqd)*	REF	
	760111-19	. . DOOR ASSY, fuselage station 340 to 352 LH	1	
-13	760111-21	. . . DOOR, fuselage station 340 to 352 LH	1	
		Attaching Parts		
-14	NAS1203-4	. . . SCREW (80205)	10	
-15	NAS1203-2	. . . SCREW (80205)	22	
-16	763693	. . . GROMMET, fuel drain valve	2	
	778791-109	A. COVER INSTL, fuselage station 335 to 358 (NHA 849138-101)	1	6701-6720
	778791-121	B. COVER INSTL, fuselage station 335 to 358 (NHA 849138-101)	1	6701-6765
	778791-123	. COVER INSTL, fuselage station 335 to 358 (NHA 849138-101)	1	6766-
-18	778791-107	A. . COVER ASSY, fuselage station 335 to 358 (Modified and reidentified to 778791-115 per AA.1F-104-OT-749C)	1	6701-6720
	778791-115	B. . COVER ASSY, fuselage station 335 to 358 (Supersedes 778791-107 per AA.1F-104-OT-749C)	1	6721-
		Attaching Parts		
-19	NAS1203-4	. . SCREW (80205)	35	
-20	NAS1204-6	. . SCREW (80205)	1	
-21	778791-103	A. . . DOOR ASSY, access	1	6701-6720
	778791-117	B. . . DOOR ASSY, access	1	
		Attaching Parts		
-22	4002-1	. . . STUD, camloc fastener (71286)	6	
	R4G	. . . RING, camloc fastener snap (71286)	6	
	4002G	. . . GROMMET, camloc fastener (71286)	6	
	214-16	. . . RECEPTACLE, camloc fastener (71286)	6	
-23	RS107-60	. . . . CHAIN ASSY, access door (86831)	1	
	769932-109	. DOOR INSTL, fuselage station 358 to 370 fuel pump access LH *(see fig. 40 for reqd)*	REF	

Fuselage Structure

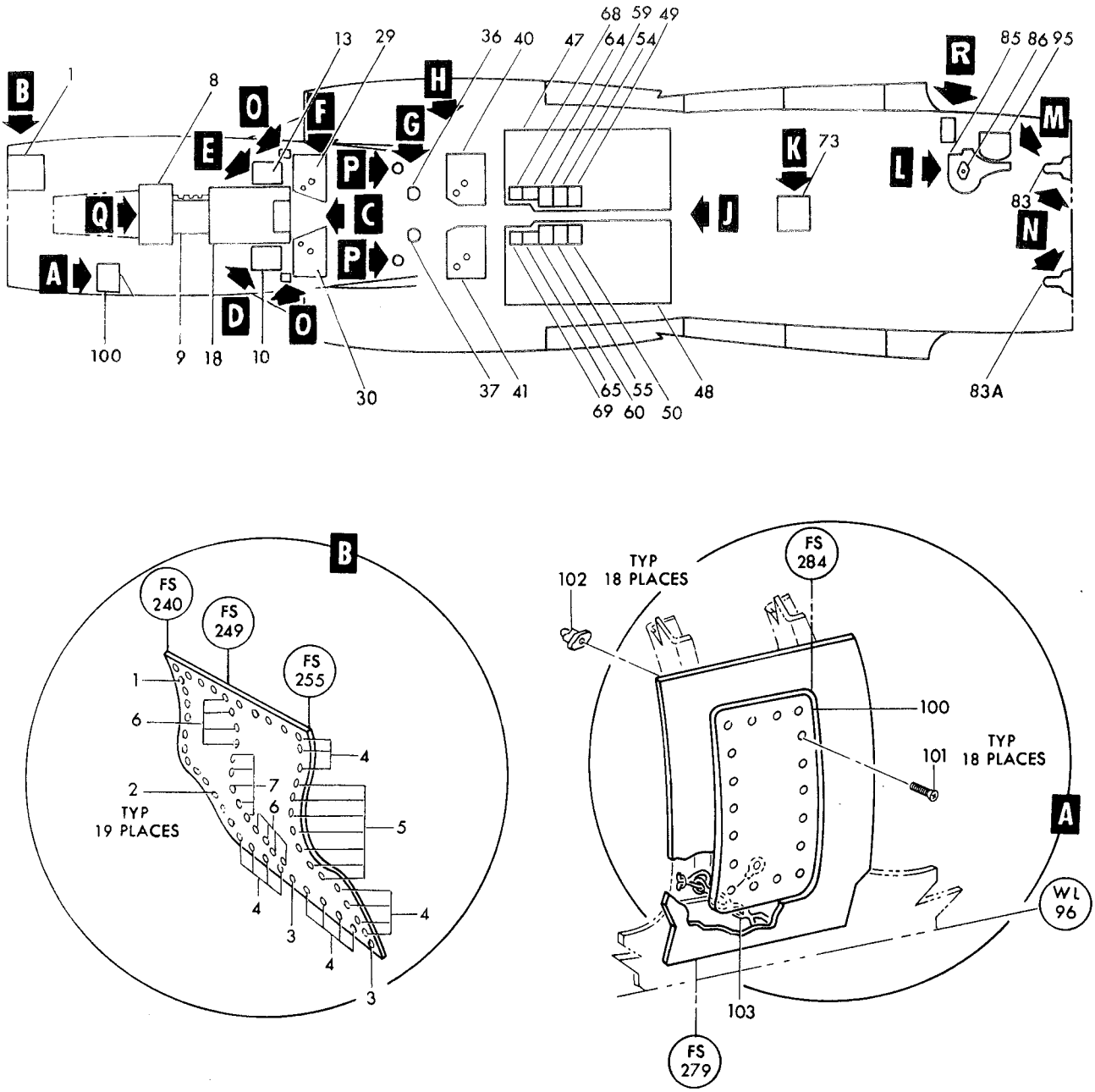

Figure 61—Access Covers and Doors Lower Fuselage (Sheet 1 of 4)

Fuselage Structure

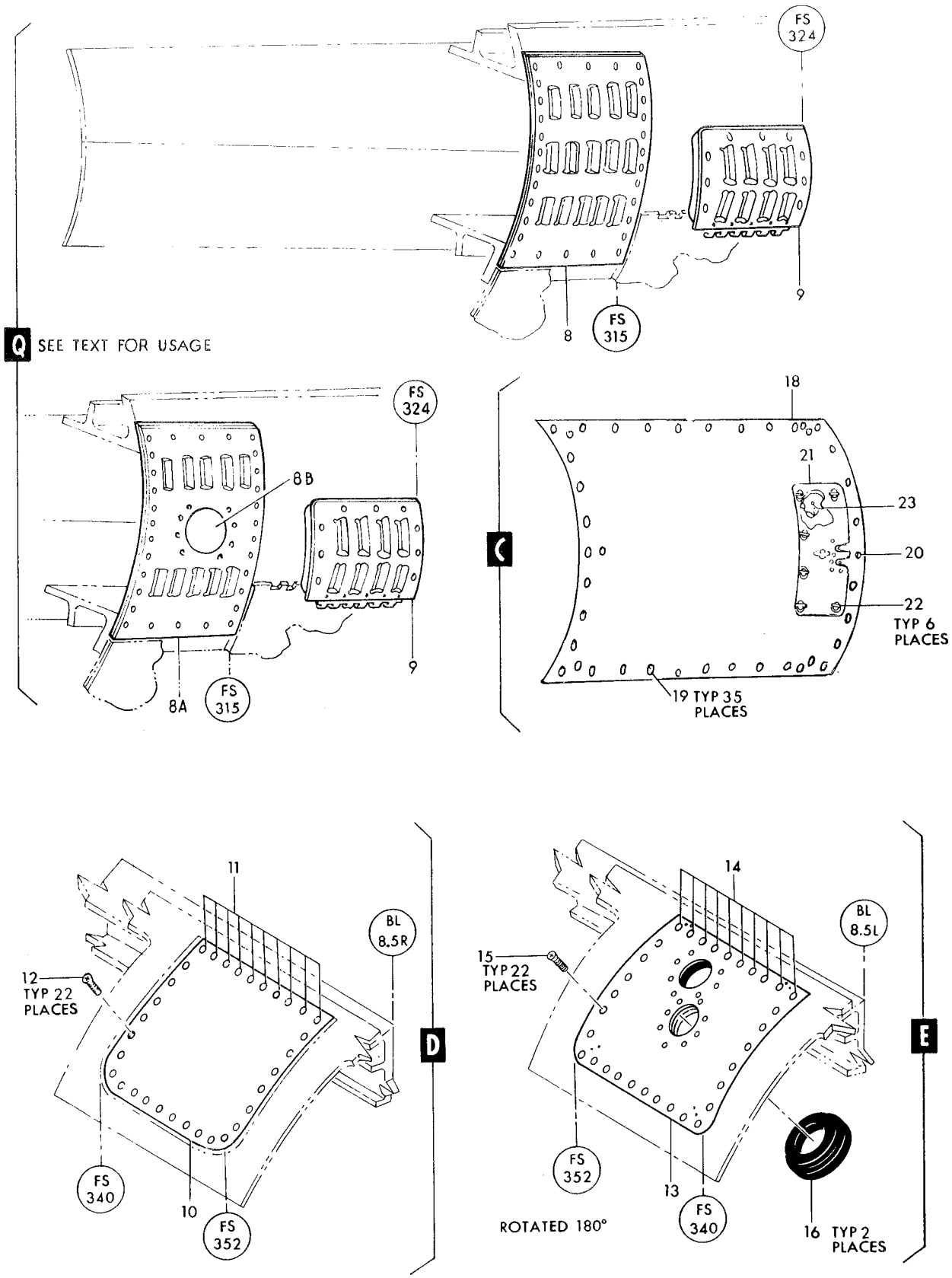

Figure 61—Access Covers and Doors Lower Fuselage (Sheet 2 of 4)

Fuselage Structure

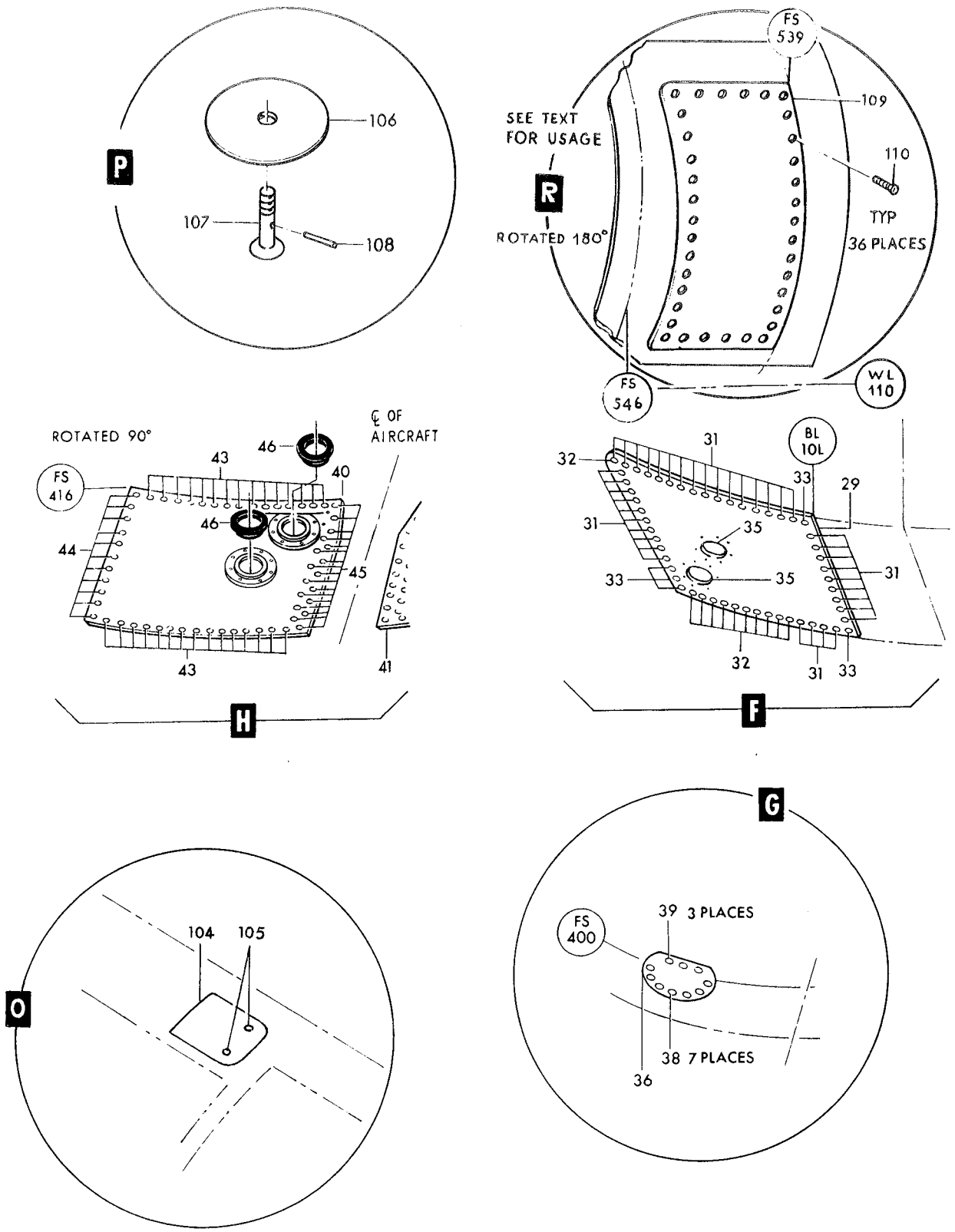

Figure 61—Access Covers and Doors Lower Fuselage (Sheet 3 of 4)

Fuselage Structure

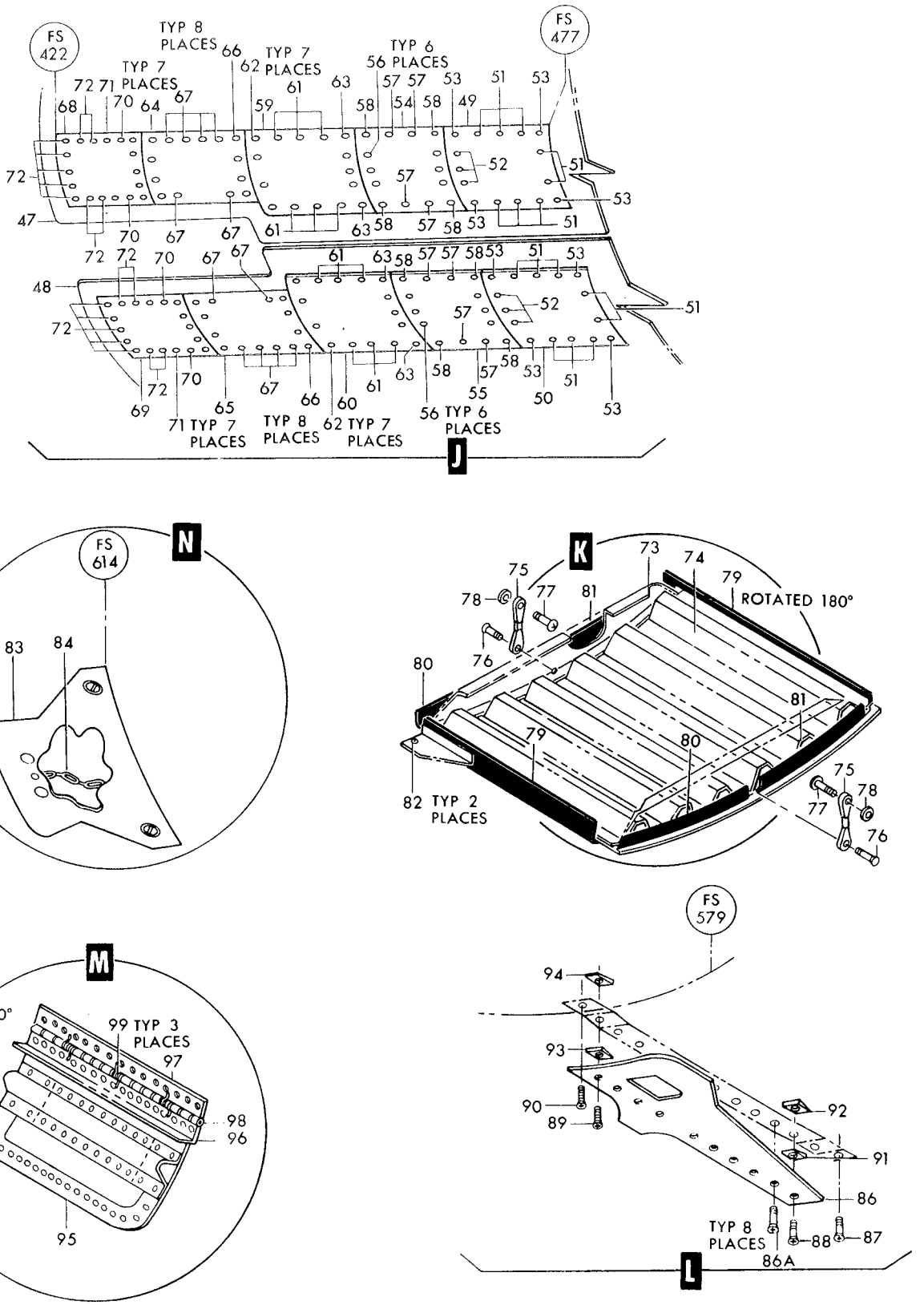

Figure 61—Access Covers and Doors Lower Fuselage (Sheet 4 of 4)

Figura e particolare	NDR	DENOMINAZIONE	Quant.	Codice applicab.
61	769932-110	DOOR INSTL, fuselage station 358 to 370 fuel pump access RH *(see fig. 40 for reqd)*	REF	
	769932-111	. DOOR ASSY, fuselage station 358 to 370 fuel pump access LH	1	
	769932-112	. DOOR ASSY, fuselage station 358 to 370 fuel pump access RH	1	
-29	769932-113	. . DOOR, fuselage station 358 to 370 fuel pump access LH	1	
-30	769932-114	. . DOOR, fuselage station 358 to 370 fuel pump access RH	1	
		Attaching Parts		
-31	NAS1203-3	. . SCREW (80205)	38	
-32	NAS1203-4	. . SCREW (80205)	11	
-33	NAS1203-5	. . SCREW (80205)	5	
-35	770174-1	. . GROMMET, fuel drain valve	2	
-36	770123-17	. DOOR, LH access *(see fig. 40 for reqd)*	REF	
-37	770123-18	. DOOR, RH access *(see fig. 40 for reqd)*	REF	
		Attaching Parts		
-38	NAS1203-2	. SCREW (80205)	7	
-39	NAS1203-4	. SCREW (80205)	3	
	769933-501	. DOOR INSTL, fuselage station 406 to 417 fuel pump access LH *(see fig. 40 for reqd)*	REF	
	769933-502	. DOOR INSTL, fuselage station 406 to 417 fuel pump access RH *(see fig. 40 for reqd)*	REF	
-40	769933-23	. . DOOR ASSY, fuel pump access LH	1	
-41	769933-24	. . DOOR ASSY, fuel pump access RH	1	
		Attaching Parts		
-43	NAS1203-4	. . SCREW (80205)	30	
-44	NAS1203-5	. . SCREW (80205)	11	
-45	NAS1203-6	. . SCREW (80205)	17	
-46	770174-1	. . . GROMMET, fuel drain valve	2	
-47	793432-107	. DOOR ASSY, MLG fwd *(see fig. 239 for reqd)*	REF	6701-6720
	793432-113	. DOOR ASSY, MLG fwd *(see fig. 239 for reqd)*	REF	6721-6815
	793492-117	. DOOR ASSY, MLG fwd *(see fig. 239 for reqd)*	REF	6816-
-48	793432-108	. DOOR ASSY, MLG fwd *(see fig. 239 for reqd)*	REF	6701-6720
	793432-114	. DOOR ASSY, MLG fwd *(see fig. 239 for reqd)*	REF	6721-6815
	793432-118	. DOOR ASSY, MLG fwd *(see fig. 239 for reqd)*	REF	6816-
	793432-35	. . BEAM ASSY, MLG fwd door *(see fig. 239 for reqd)*	REF	
	793432-36	. . BEAM ASSY, MLG fwd door *(see fig. 239 for reqd)*	REF	
-49	760215-141	. . . DOOR, MLG fwd outer LH	1	
-50	760215-142	. . . DOOR, MLG fwd outer RH	1	
		Attaching Parts		
-51	NAS1203-3	. . . SCREW (80205)	8	
-52	NAS1203-4	. . . SCREW (80205)	3	
-53	NAS1203-5	. . . SCREW (80205)	4	
-54	793432-13	. . . DOOR, MLG fwd LH	1	
-55	793432-14	. . . DOOR, MLG fwd RH	1	
		Attaching Parts		
-56	NAS1203-4	. . . SCREW (80205)	6	
-57	NAS1203-3	. . . SCREW (80205)	4	
-58	NAS1203-5	. . . SCREW (80205)	4	
-59	793432-15	. . . DOOR, roller adjust access LH	1	
-60	793432-16	. . . DOOR, roller adjust access RH	1	
		Attaching Parts		
-61	NAS1203-3	. . . SCREW (80205)	6	
-62	NAS1203-4	. . . SCREW (80205)	7	
-63	NAS1203-5	. . . SCREW (80205)	2	
-64	760215-119	. . . DOOR, uplock switch LH	1	

Figura e particolare	NDR	DENOMINAZIONE (1 2 3 4 5 6 7)	Quant.	Codice applicab.
61-65	760215-120	DOOR, uplock switch RH	1	
		Attaching Parts		
-66	NAS1203-4	SCREW (80205)	8	
-67	NAS1203-3	SCREW (80205)	6	
		*		
-68	760215-133	DOOR, fwd MLG LH *(see fig. 239)*	1	
-69	760215-134	DOOR, fwd MLG RH *(see fig. 239)*	1	
		Attaching Parts		
-70	NAS1203-4	SCREW (80205)	2	
-71	NAS1203-5	SCREW (80205)	7	
-72	NAS1203-6	SCREW (80205)	9	
		*		
	783224-109	DOOR INSTL, fuselage station 489 to 614 lower (NHA 849138-101)	1	
	763852-4	DOOR INSTL, emergency pop out	1	
-73	763852-31	DOOR ASSY, emergency pop out	1	
		Attaching Parts		
	NAS623-3-4	SCREW (80205)	12	
	AN960D10	WASHER (88044)	12	
	MS21042L3	NUT (96906)	12	
		*		
-74	763852-25	SPOTWELD ASSY, emergency pop out	1	
-75	763851	TENSION COUPON, emergency pop out	2	
		Attaching Parts		
-76	NAS1203-4	SCREW (80205)	1	
-77	NAS1104-6	BOLT (80205)	1	
-78	726291-3	SHIM, canopy latch stud	1	
		*		
	763852-105	STRUCTURE INSTL, emergency pop out door	1	
-79	763852-39	SEAL, emergency pop out door	2	
-80	763852-41	SEAL, emergency pop out door	2	
-81	763852-43	SEAL, emergency pop out door	2	
-82	NAS517-3-3	SCREW (80205)	2	
	AN960D10	WASHER (88044)	2	
	MS21042L3	NUT (96906)	2	
-83	850280-101	DOOR ASSY, lower fuselage station 614 LH	1	
-83A	850280-102	DOOR ASSY, lower fuselage station 614 RH	1	
		Attaching Parts		
	2700-6	STUD, camloc fastener (71286)	2	
		*		
-84	760202-29	CHAIN, lower fuselage station 614	1	
		Attaching Parts		
	AN507-440R6	SCREW (88044)	1	
	AN960D4	WASHER (88044)	1	
	MS21042L04	NUT (96906)	1	
		*		
	786925-1	DOOR INSTL, arresting hook pivot shaft access *(see fig. 42 for reqd)*	REF	
-85	786925-7	DOOR, arresting hook pivot shaft access	1	
		Attaching Parts		
	NAS517-3-3	SCREW (80205)	2	
		*		
-86	786925-3	DOUBLER ASSY, arresting hook pivot shaft access	1	
		Attaching Parts		
-86A	NAS517-3-5	SCREW (80205)	8	
-87	NAS517-3-7	SCREW (80205)	1	
-88	NAS517-3-8	SCREW (80205)	1	
-89	NAS517-3-10	SCREW (80205)	1	
-90	NAS517-3-11	SCREW (80205)	1	
	AN960D10	WASHER (88044)	12	
	MS21042L3	NUT (96906)	12	
		*		

Figura e particolare	NDR	DENOMINAZIONE	Quant.	Codice applicab.
61-91	766352-41	SHIM, bulkhead ring tapered	1	
-92	786940-1	SHIM, fuselage station 593 lower	1	
-93	786941-1	SHIM, former	1	
-94	786941-3	SHIM, former	1	
	761287-20	DOOR INSTL, fire fighting access *(see fig. 31 for reqd)*	REF	
-95	761287-33	DOOR ASSY, fire access	1	
		Attaching Parts		
	NAS1203-2	SCREW (80205)	15	
	AN960-10L	WASHER (88044)	15	
	MS21042L3	NUT (96906)	15	
	761287-21	HINGE ASSY, fire fighting access (consists of 761284, 761285, 761287-18 and 726097-3) (spares only)	REF	
-96	761284	HINGE, half flapper door	1	
-97	761285	HINGE, half flapper door	1	
-98	761287-18	PIN, hinge	1	
-99	726097-3	SPRING, flapper door hinge	3	
	783238-1	DOOR INSTL, purge valve access (LH only) *(see fig. 30 for reqd)*	REF	
-100	783239-1	DOOR ASSY, purge valve access	1	
		Attaching Parts		
-101	NAS1203-3	SCREW (80205)	18	
-102	14633H02	NUT (80539)	18	
-103	RS107-60	CHAIN ASSY, access door (86831)	1	
	850220-101	DOOR INSTL, fus sta 358 pylon mounting hole LH *(see fig. 30 for reqd)*	REF	
	850220-102	DOOR INSTL, fus sta 358 pylon mounting hole RH *(see fig. 30 for reqd)*	REF	
-104	850220-103	DOOR, fus sta 358 pylon mounting hole	1	
-105	NAS517-3-8	SCREW (80205)	2	
	799385-101	COVER ASSY, fus sta 396 pylon attach hole *(see fig. 40 for reqd)*	REF	
-106	850120-101	COVER, fus sta 396 pylon attach hole	1	
-107	728685-101	SCREW, fus sta 396 pylon attach hole cover	1	
-108	NAS561P2-8	PIN (80205)	1	
	852577-101	G. COVER INSTL, fus sta 539 to 546 *(see fig. 54)*	1	6791-6830
-109	852577-103	G. COVER ASSY, fus sta 539 to 546	1	6791-6830
		Attaching Parts		
-110	NAS1203-4	G. SCREW (80205)	36	6791-6830

A - Removed per AA.1F-104-OT-749C
B - Reqd per AA-1F-104-OT-749C
C - Removed per AA.1F-104-OT-647
D - Reqd per AA.1F-104-OT-647
E - Removed per AA.1F-104-OT-759B
F - Reqd per AA.1F-104-OT-759B
G - Only per partial incorporation of SPU system

Figura e particolare	NDR	1 2 3 4 5 6 7 DENOMINAZIONE	Quant.	Codice applicab.
		COCKPIT LOWER ACCESS HATCH		
62	792971-101	A. HATCH INSTL, cockpit lower access (NHA 849141-101)	1	6701-6815
	792971-103	B. HATCH INSTL, cockpit lower access (NHA 849141-101)	1	6816-
	792971-105	. HATCH INSTL, cockpit lower access (NHA 849141-101)	1 *	
- 1	FL0242-114	A. . HATCH ASSY, cockpit lower access (Modified and reidentified to 852167-101 per AA.1F-104-OT-759A) (A0019)	1	6701-6815
- 2	852167-101	B. . HATCH ASSY, cockpit lower access (Supersedes FL0242-114 per AA. 1F-104-OT-759A)	1	6816-
	852167-107	. . HATCH ASSY, cockpit lower access	1 *	
- 2A	852418-101	. . . COVER, conversion kit radar altimeter	2 *	
		Attaching Parts		
- 2B	NAS1202-3	. . . SCREW (80205)	24 *	
- 2C	AN960D8	. . . WASHER (88044)	24 *	
- 2D	MS21042L08	. . . NUT (96906)	24 *	
- 3	778663-105	A. . . LIGHT INSTL, fuselage station 237 lower navigation *(see fig. 198)*	1	6701-6815
- 4	786248-103	. . . ANTENNA INSTL, UHF *(see fig. 201)*	1	6701-6815
- 4A	786248-109	. . . ANTENNA INSTL, UHF *(see fig. 201)*	1	6816-
- 5	852194-101	B. . . ELECTRICAL INSTL, antenna RCVR-XMTR radar altimeter *(see fig. 201)*	1	
- 5A	01R5-1001-1	B. . . ANTENNA ASSY, (E2001) radar altimeter (A0019) *(see fig. 201)*	2	6816-
	792985-3	A. . . HATCH ASSY, cockpit lower access (Modified and reidentified to 852167-101 per AA.1F-104-OT-759A)	1	6701-6815
	852167-103	B. . . HATCH ASSY, cockpit lower access (Supersedes 792985-3 per AA. 1F-104-OT-759A)	1	6816-
- 6	MS27253-1	. . . . NAMEPLATE, identification and modification (96906)	1	
- 7	781361-1	. . . . FITTING, access hatch support LH	2	
	781361-2	. . . . FITTING, access hatch support RH	2	
		Attaching Parts		
- 8	MS20004-10	. . . . BOLT (96906)	2	
- 9	MS20004-14	. . . . BOLT (96906)	2	
-10	MS20002C4	. . . . WASHER (96906)	4	
-11	EB048	. . . . NUT, self-locking double hexagon high tension (72962)	4	
-12	MS20007-26	. . . . BOLT (96906)	4	
-13	MS20002C7	. . . . WASHER (96906)	4	
-14	FL0300-000	A. . . . FLOOR ASSY, UHF antenna protecting (A0019)	1	6701-6815
-15	NAS623-3-5	A. . . . . SCREW (80205)	4	6701-6815
-16	NAS463XDD10	A. . . . . SHIM (80205)	4	6701-6815
-17	852203-101	B. . . . COVER, antenna UHF	1	
		Attaching Parts		
-18	NAS623-3-5	B. . . . SCREW (80205)	4	
-19	NAS463XDD10	B. . . . SHIM (80205)	4	
-20	792721-1	. . . . BUSHING, cockpit lower hatch adjust	4	
-21	727580-1	. . . . BOLT, access hatch latch	4	
-22	MS20002C4	. . . . WASHER (96906)	4	
-23	MS20002-4	. . . . WASHER (96906)	4	
-24	EB048	. . . . NUT, self-locking double hexagon high tension (72962)	4	
-25	771657-1	. . . . FITTING, access hatch latch LH	2	
	771657-2	. . . . FITTING, access hatch latch RH	2	
		Attaching Parts		
-26	NAS623-3-6	. . . . SCREW (80205)	4	
-27	NAS623-3-5	. . . . SCREW (80205)	2	
-28	AN960D10	. . . . WASHER (88044)	12	
-29	MS21042L3	. . . . NUT (96906)	6	
	793130-1	. . . . COVER ASSY, hatch bolt access	4	
-30	793130-3	. . . . . COVER, hatch bolt access	1	
		Attaching Parts		
-31	NAS517-3-3	. . . . . SCREW (80205)	2	

Fuselage Structure

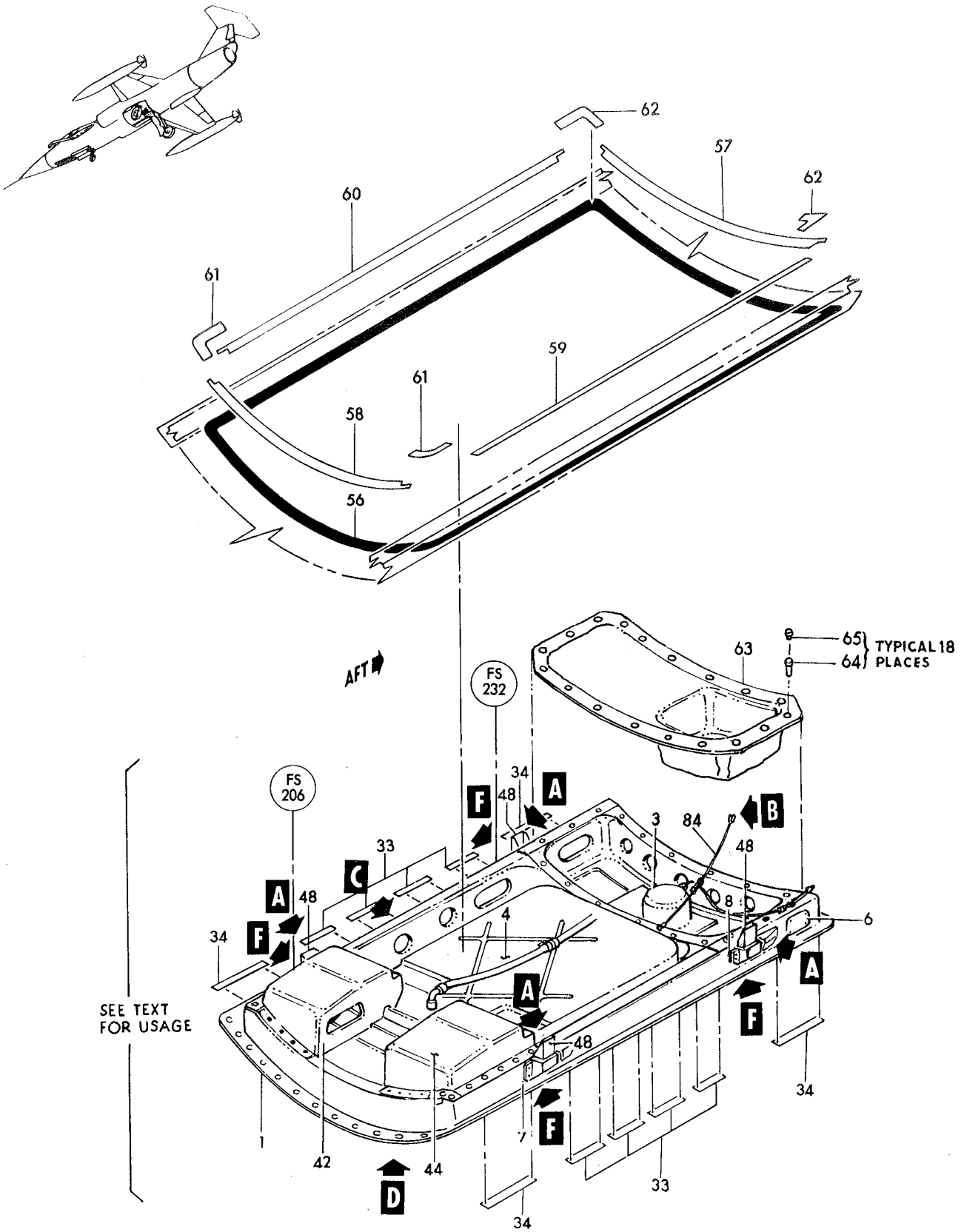

Figure 62—Cockpit Lower Access Hatch (Sheet 1 of 3)

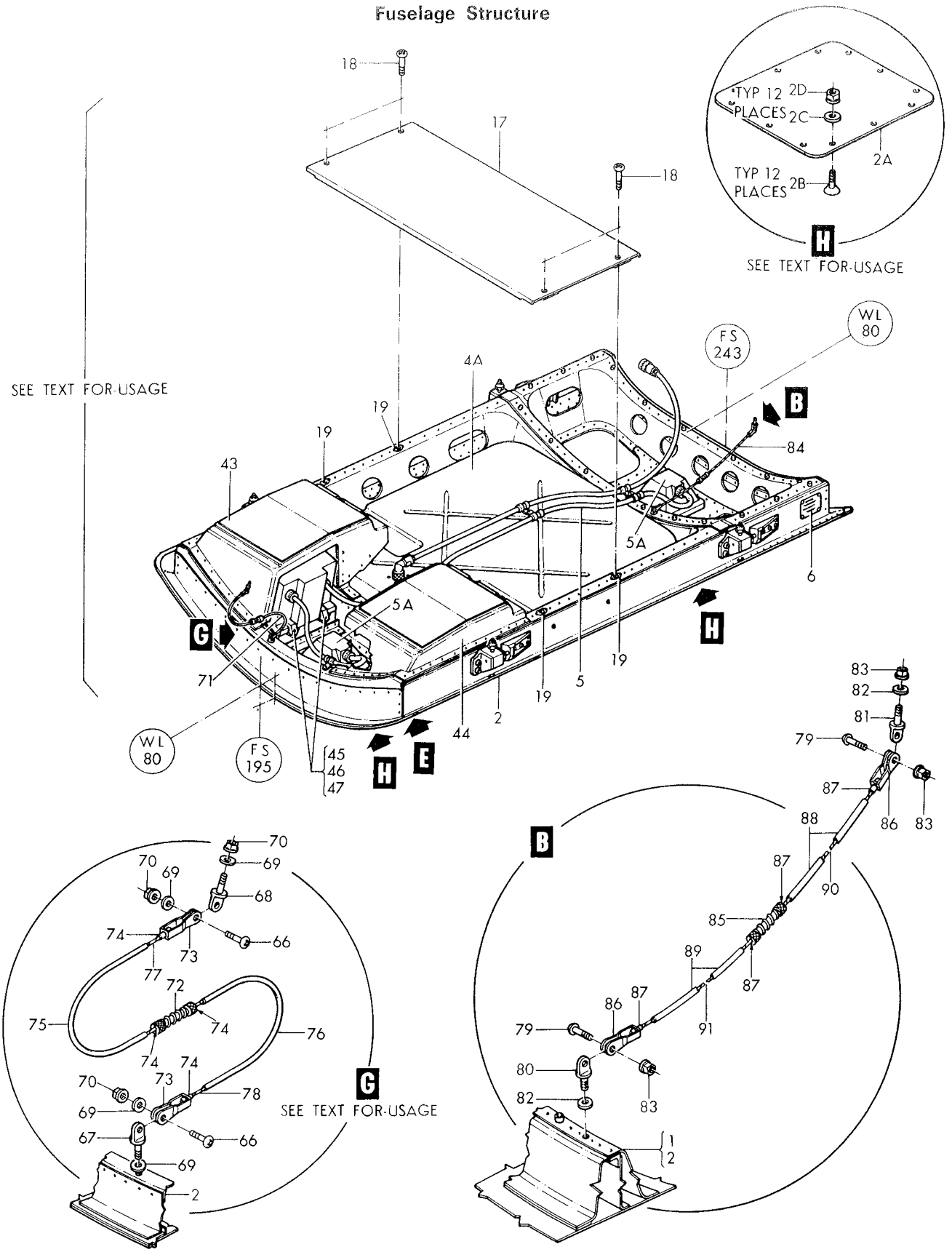

Figure 62-Cockpit Lower Access Hatch (Sheet 2 of 3)

Fuselage Structure

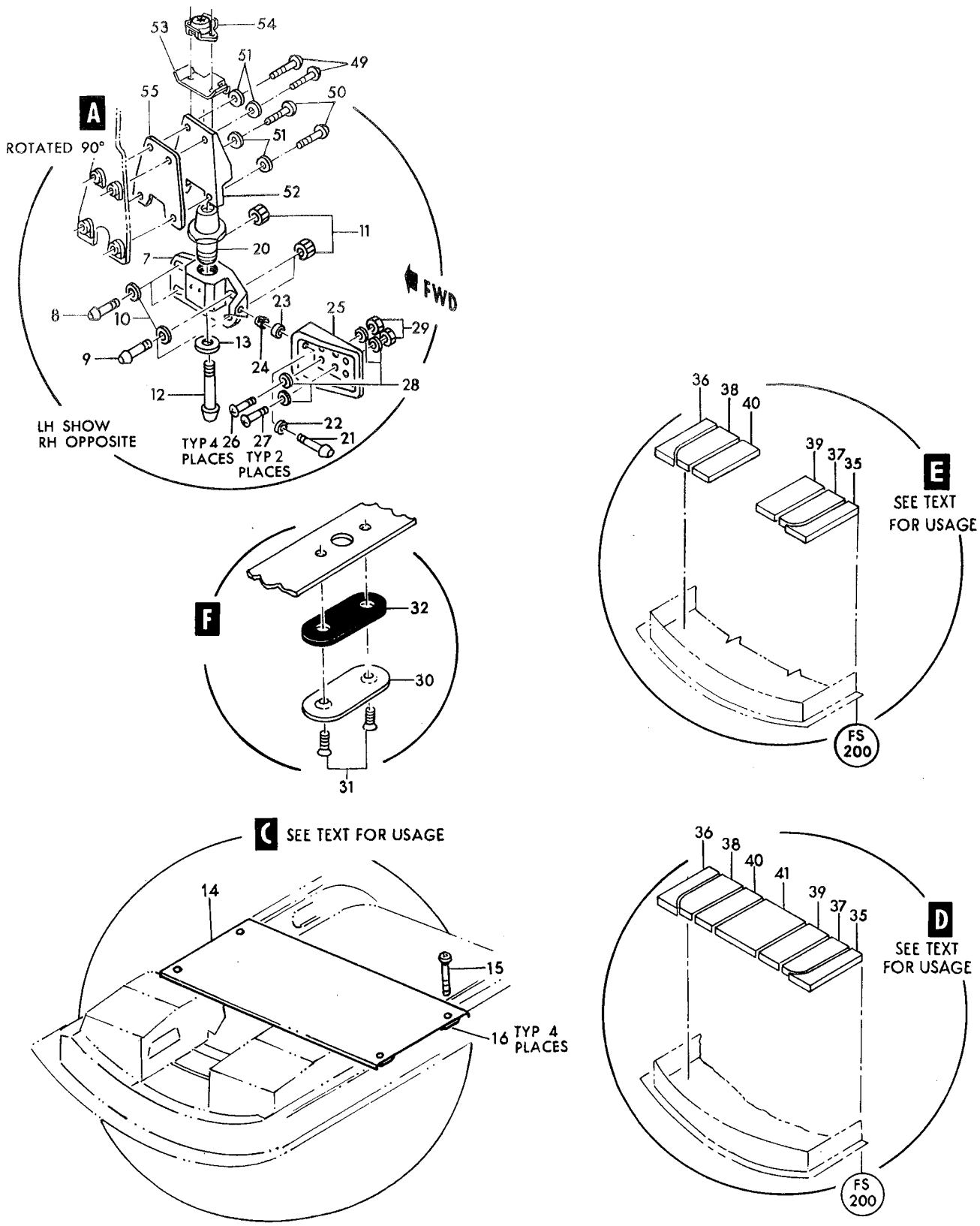

Figure 62 – Cockpit Lower Access Hatch (Sheet 3 of 3)

Figura e particolare	NDR	1	2	3	4	5	6	7	DENOMINAZIONE	Quant.	Codice applicab.
62-32	793131-1								GASKET, hatch bolt access	1	
-33	781393-1								STRIP, access hatch ground	8	
-34	781393-3								STRIP, access hatch ground	4	
	789330-1								INSULATION INSTL, fwd access hatch	1	
-35	789330-9								INSULATION, fwd access gatch	1	
-36	789330-10								INSULATION, fwd access hatch	1	
-37	789330-11								INSULATION, fwd access hatch	1	
-38	789330-12								INSULATION, fwd access hatch	1	
-39	789330-13								INSULATION, fwd access hatch	1	
-40	789330-14								INSULATION, fwd access hatch	1	
-41	789330-15	A.							INSULATION, fwd access hatch	1	6701-6815
-42	790480-1	A.							FOOTREST ASSY, access hatch RH	1	6701-6815
-43	852192-101	B.							FOOTREST ASSY, access hatch RH	1	
-44	790480-2								FOOTREST ASSY, access hatch LH	1	
	852195-101	B.							SUPPORT ASSY, RCVR-XMTR radar altimeter	1	
-45	852172-101	B.							RETAINER, radar altimeter	2	
-46	NAS1104-4	B.							SCREW (80205)	2	
-47	AN960D416	B.							WASHER (88044)	2	
-48	792725-1								SUPPORT ASSY, cockpit lower access hatch	4	
									Attaching Parts		
-49	NAS623-4-6								SCREW (80205)	2	
-50	NAS623-4-14								SCREW (80205)	2	
-51	AN960D416								WASHER (88044)	4	
									*		
	792722-1								SUPPORT, cockpit lower access hatch	1	
-52	792725-3								STRIKE, cockpit lower hatch	1	
-53	792723-1								STRIKE, cockpit lower hatch	1	
-54	52NA21-12-070								NUT, anchor two lug floating (72962)	1	
-55	761214								FILLER, access hatch release mechanism	4	
	776071-1								SEAL INSTL, access hatch (NHA 849141-101)	1	
-56	776072-1								SEAL ASSY, access hatch	1	
-57	776075-1								RETAINER, access hatch seal (aft)	1	
-58	776074-1								RETAINER, access hatch seal (fwd)	1	
-59	776073-1								RETAINER, access hatch seal LH	1	
-60	776073-2								RETAINER, access hatch seal RH	1	
-61	776076-1								RETAINER, access hatch corner seal (fwd)	2	
-62	776076-3								RETAINER, access hatch corner seal (aft)	2	
	789330-3								BLANKET INSTL, fwd access hatch insulation (NHA 849141-101)	1	
-63	FL0302-000A2								BLANKET ASSY, fwd access hatch insulation (A0019)	1	
									Attaching Parts		
-64	MS27980-6N								SOCKET (96906)	18	
-65	MS27980-1N								BUTTON (96906)	18	
	852187-101	B.							LANYARD INSTL, cockpit lower access hatch (NHA 849181-101)	1	6816-
-66	AN23-8A	B.							BOLT, clevis (88044)	2	6816-
-67	AN42B3A	B.							BOLT (88044)	1	6816-
-68	AN42B4A	B.							BOLT (88044)	1	6816-
-69	AN960-10L	B.							WASHER (88044)	4	6816-
-70	MS21042L3	B.							NUT (96906)	3	6816-
-71	847959-121	B.							LANYARD ASSY, cockpit lower access hatch	1	6816-
-72	RA2258-2	B.							TERMINAL, quick disconnect (80097)	1	6816-
	847959-103	B.							CABLE ASSY, cockpit lower access hatch lanyard	1	6816-
	847959-119	B.							CABLE ASSY, cockpit lower access hatch lanyard	1	6816-
-73	RA2500-2	B.							TERMINAL, cable strap (80097)	1	6816-
-74	MS20664C2	B.							BALL END, wire rope (96906)	2	6816-
-75	847959-111	B.							COVER, cockpit lower access hatch cable assy (Reqd on 847959-103)	1	6816-
-76	847959-117	B.							COVER, cockpit lower access hatch cable assy (Reqd on 847959-119)	1	6816-
-77	847959-107	B.							CABLE, cockpit lower access hatch lanyard (Reqd on 847959-103)	1	6816-
-78	847959-115	B.							CABLE, cockpit lower access hatch lanyard (Reqd on 847959-119)	1	6816-
	851076-101								LANYARD INSTL, cockpit lower access hatch (NHA 849141-101)	1	
-79	AN23-8A								BOLT, clevis (88044)	2	

Figura e particolare	NDR	DENOMINAZIONE	Quant.	Codice applicab.
62-80	AN42B4A	BOLT (88044)	1	
-81	AN42B5A	BOLT (88044)	1	
-82	AN960-10L	WASHER (88044)	2	
-83	MS21042L3	NUT (96906)	3	
-84	847959-101	LANYARD ASSY, cockpit lower access hatch	1	
-85	RA2258-2	TERMINAL, quick disconnect (80097)	1	
	847959-103	CABLE ASSY, cockpit lower access hatch lanyard	1	
	847959-105	CABLE ASSY, cockpit lower access hatch lanyard	1	
-86	RA2500-2	TERMINAL, cable strap (80097)	1	
-87	MS20664C2	BALL END, wire cope (96906)	2	
-88	847959-111	COVER, cockpit lower access hatch cable assy (Reqd on 847959-103)	1	
-89	847959-113	COVER, cockpit lower access hatch cable assy (Reqd on 847959-105)	1	
-90	847959-107	CABLE, cockpit lower access hatch lanyard (Reqd on 847959-103)	1	
-91	847959-109	CABLE, cockpit lower access hatch lanyard (Reqd on 847959-105)	1	

A - Removed per AA.1F-104-OT-759B
B - Reqd per AA.1F-104-OT-759B
* - NOTE - Installed on the AWX aircraft only - Except the AWX aircraft MM. 6816 thru 6820 since the radar-altimeter it's already mounted.

Figura e particolare	NDR	DENOMINAZIONE (1 2 3 4 5 6 7)	Quant.	Codice applicab.
		FUSELAGE CONTROLS COMPLETE		
63	783323-107	. CONTROL INSTL, mid fuselage (NHA 849140-101)	1	
-1	761042-105	. . BRACKET INSTL, fus sta 505 flight control pulley LH *(see fig. 77)*	1	
	761042-106	. . BRACKET INSTL, fus sta 505 flicht control pulley RH *(see fig. 77)*	1	
-2	784220-105	. . CABLE INSTL, mid fus flight control *(see fig. 66, 72, 75 and 81)*	1	
-3	762233-505	. . MOTOR INSTL, aileron trim *(see fig. 74)*	1	
-4	783063-101	. . CONTROL INSTL, throttle *(see fig. 81)*	1	
-5	763653-4L	. . SPRING INSTL, fus sta 614 rudder cable *(see fig. 67)*	1	
	763653-4R	. . SPRING INSTL, fus sta 614 rudder cable *(see fig. 67)*	1	
-6	796926-1	. . ARM INSTL, LG manual release valve *(see fig. 88)*	1	
-7	783162-101	. . CONTROL INST, LH fus sta 358 to 614 manual release systems *(see fig. 87, 88, 92, 93 and 94)*	1	
	799617-103	. . CONTROL INSTL, fus sta 505 to 579 nozzle area emergency manual release *(see fig. 95)*	1	
-8	784003-1	. . ACTUATOR INSTL, aileron autopilot RH *(see fig. 73)*	1	
-10	783162-3	. CONTROL INSTL, fus sta 614 and aft manual release systems *(see fig. 32 for reqd)*	REF	
	783160-501	. CONTROL INSTL, forward fuselage (NHA 849141-101)	1	
-11	760232	. . BRACKET INSTL, fus sta 184 RH aileron cable pulley *(see fig. 72)*	1	
-12	851290-102	. . PEDAL INSTL, RH rudder and brake *(see fig. 64)*	1	
-13	762311	. . BRACKET INSTL, center stand pedal adjustment *(see fig. 64)*	1	
-14	783162-505	. . CONTROL INSTL, fus sta 184 to 358 LH manual release systems *(see fig. 78 and 91)*	1	
-15	783112-1	. . BRACKET INSTL, fus sta 305 to 335 lg and drag chute manual release *(see fig. 87)*	1	
-16	764367-4	. . TUNNEL INSTL, LH cockpit control cable *(see fig. 36)*	1	6701-6815
	764367-101	. . TUNNEL INSTL, LH cockpit control cable *(see fig. 36)*	1	6816-
-17	772095-1	. . TUNNEL INSTL, RH cockpit control cable *(see fig. 37)*	1	
-18	781628-5	. . BRACKET INSTL, fus sta 206 manual lg release *(see fig. 85)*	1	
-19	786054-1	. . BRACKET INSTL, fus sta 206 ram air turbine release *(see fig. 89)*	1	
-20	784567-1	. . CLAMBLOCK INSTL, fus sta 335 manual release cable tube *(see fig. 87)*	1	
-21	784220-11	. . CABLES INSTL, nose steering flight control *(see fig. 236)*	1	
	783109-101	. CONTROL INSTL, forward panel LH *(see fig. 30 for reqd)*	REF	6701-6740
	783109-103	. CONTROL INSTL, forward panel LH *(see fig. 30 for reqd)*	REF	6741-6765
	783109-105	. CONTROL INSTL, forward panel LH *(see fig. 30 for reqd)*	REF	6766-
-22	772092-1	. . SPRING INSTL, nose steering overload LH *(see fig. 235)*	1	
-23	775559-1	. . BRACKET INSTL, fus sta 328 throttle control *(see fig. 80)*	1	
-24	775560-1	. . BRACKET INSTL, fus sta 335 throttle control *(see fig. 80)*	1	
-25	775561-1	. . BRACKET INSTL, fus sta 346 throttle control *(see fig. 80)*	1	
-26	775562-1	. . BRACKET INSTL, fus sta 352 throttle control *(see fig. 80)*	1	
-27	850656-101	. . BRACKET INSTL, throttle control drive pulley *(see fig. 79)*	1	
-28	760231	. . BRACKET INSTL, fus sta 184 LH aileron cable pulley *(see fig. 72)*	1	
-29	760260-103	. . HOUSING INSTL, throttle control *(see fig. 78 and 217)*	1	
-30	760355L	. . BRACKET INSTL, fus sta 249 flight controls pulley *(see fig. 83)*	1	6701-6765
	760355-101	. . BRACKET INSTL, fus sta 249 flight controls pulley *(see fig. 83)*	1	6766-
-31	760475L	. . BRACKET INSTL, fus sta 209 flight controls pulley *(see fig. 83)*	1	6701-6720
	760475-101	. . BRACKET INSTL, fus sta 209 flight controls pulley *(see fig. 83)*	1	6721-
-32	760508-3L	. . BRACKET INSTL, fus sta 258 flight controls pulley *(see fig. 83)*	1	
-33	761029-15	. . BRACKET INSTL, outboard rudder torque tube support *(see fig. 64)*	1	
-34	761047-3L	. . BRACKET INSTL, fus sta 264 wheel steering control *(see fig. 235)*	1	6701-6740
	761047-101	. . BRACKET INSTL, fus sta 264 wheel steering control *(see fig. 235)*	1	6741-
-35	761554-7	. . BRACKET INSTL, fus sta 300 nose wheel steering pulley *(see fig. 236)*	1	
-36	761558-5	. . BRACKET INSTL, fus sta 261 nose wheel steering control pulley *(see fig. 235)*	1	
-37	761565L	. . PULLEY INSTL, fus sta 249 nose wheel steering controls *(see fig. 235)*	1	
-38	761823-3L	. . BRACKET INSTL, fus sta 255 throttle control pulley *(see fig. 79)*	1	
-39	761968L	. . GUIDE INSTL, fus sta 255 cable *(see fig. 72, 75, 79 and 235)*	1	
-40	785339-1	. . BRACKET INSTL, fus sta 255 landing gear and drag chute manual release *(see fig. 85)*	1	
-41	762679	. . BRACKET INSTL, fus sta 279 emergency landing gear release and drag chute *(see fig. 86 and 91)*	1	
-42	763008-5	. . HANDLE INSTL, drag chute *(see fig. 90)*	1	

Fuselage Controls

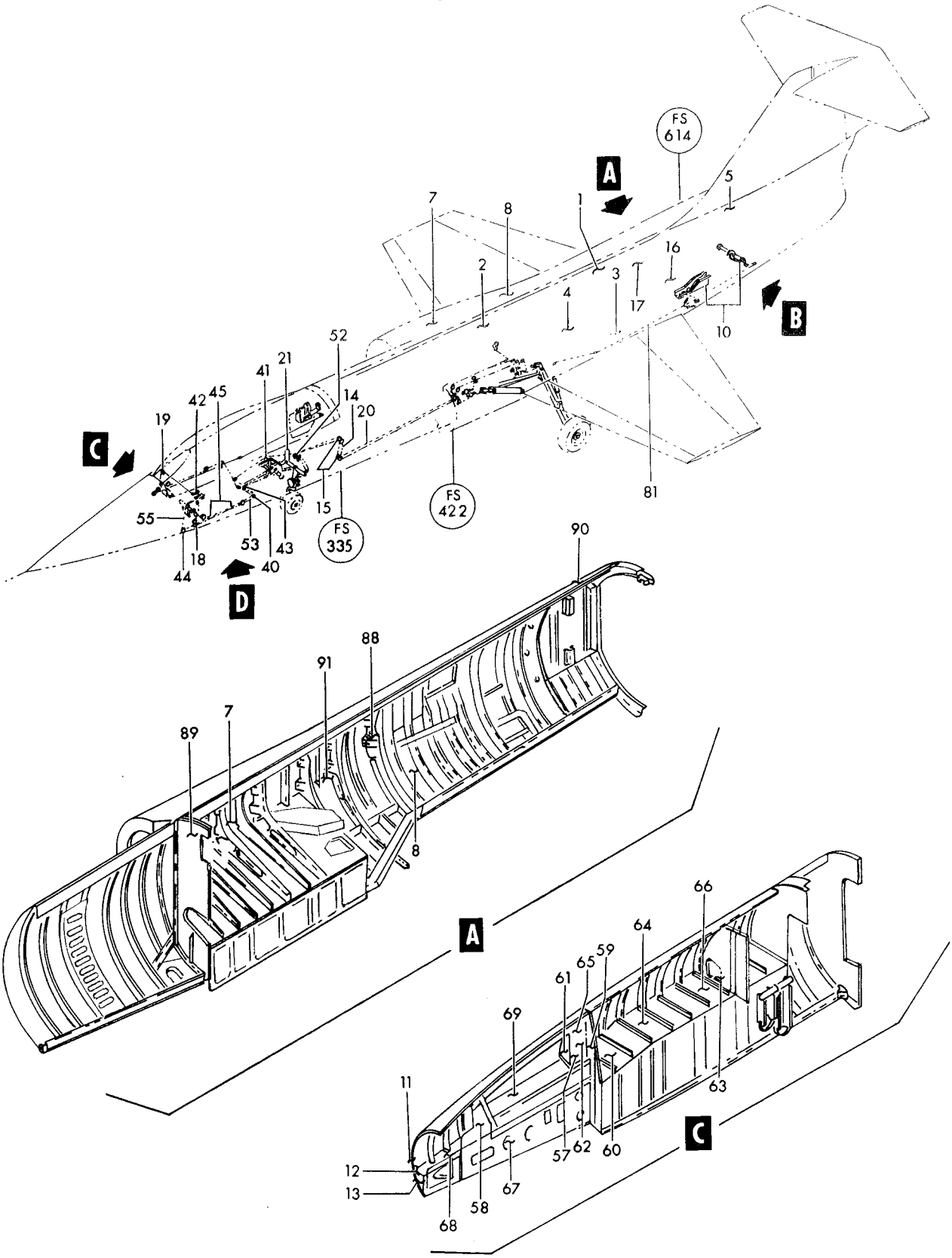

Figure 63— Fuselage Controls Complete (Sheet 1 of 2)

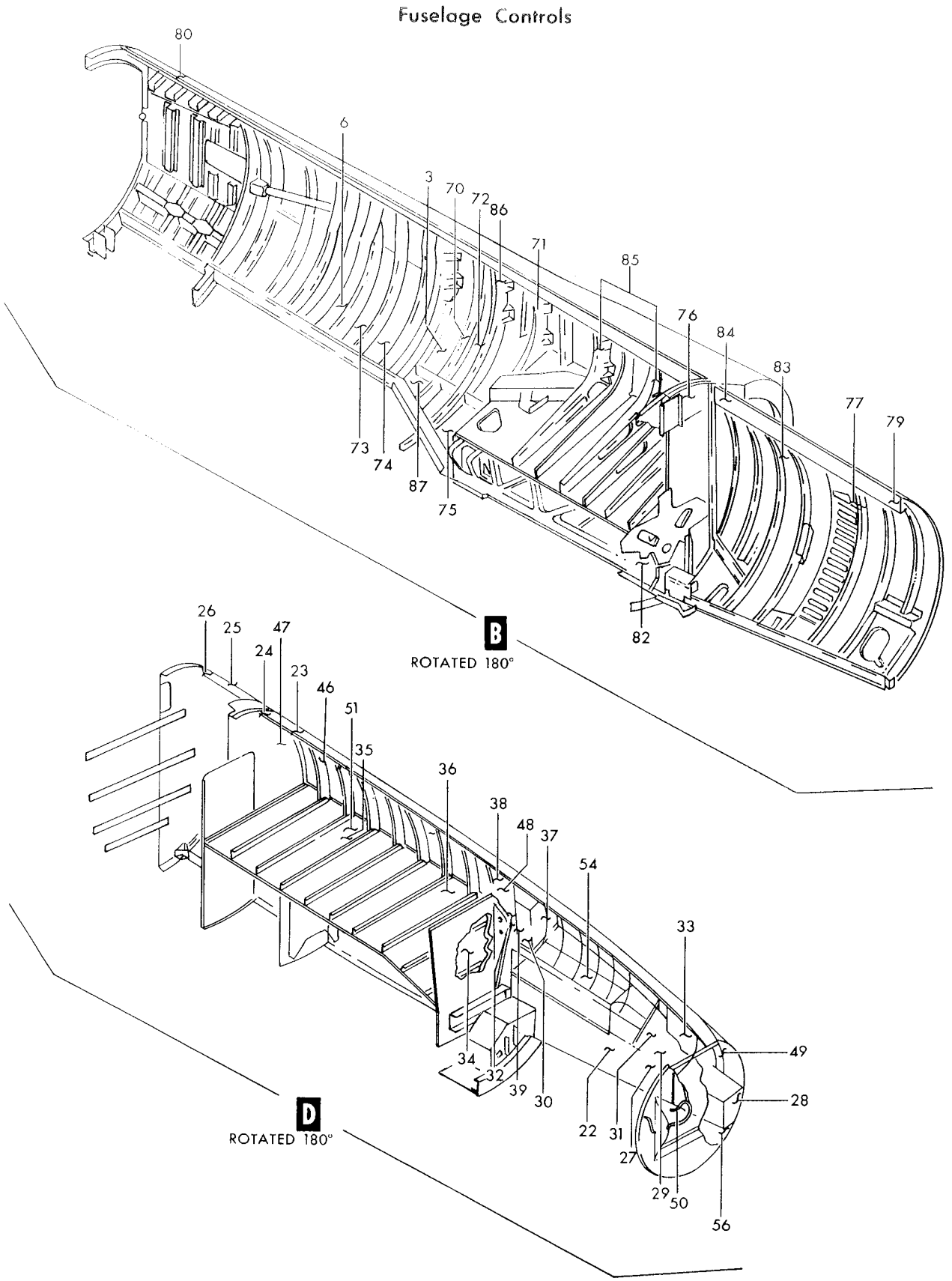

Figure 63—Fuselage Controls Complete (Sheet 2 of 2)

Figura e particolare	NDR	DENOMINAZIONE	Quant.	Codice applicab.
63-43	763011	BRACKET INSTL, fus sta 206 landing gear emergency release *(see fig. 85)*	1	
-44	785950-1	SUPPORT INSTL, fus sta 195 drag chute release *(see fig. 90)*	1	
-45	769240-1	FAIRLEAD INSTL, throttle cable (fus sta 273 and 289) *(see fig. 80)*	2	
-46	769240-3	SEAL INSTL, throttle cable (fus sta 310) *(see fig. 80)*	1	
-47	769240-5	FAIRLEAD INSTL, throttle cable (fus sta 335) *(see fig. 80)*	1	
-48	763923-3	FAIRLEAD INSTL, fus sta 261 to 267 nose wheel steering cable *(see fig. 235)*	1	
-49	783459-103	CONTROL INSTL, cockpit aileron and stabilizer *(see fig. 69)*	1	6701-6740
	783459-109	CONTROL INSTL, cockpit aileron and stabilizer *(see fig. 69)*	1	6741-
-50	851290-101	PEDAL INSTL, LH rudder and brake *(see fig. 64)*	1	
-51	764707-101	TUNNEL INSTL, fus sta 267 to 335 LH control cable *(see fig. 39)*	1	
-52	783112-7	BRACKET INSTL, fus sta 305 to 335 landing gear and drag chute manual release *(fig. 87 and 91)*	1	
-53	763559-101	CLAMP INSTL, fus sta 206, 232 and 237 manual release tube *(see fig. 85)*	1	
	763559-7	CLAMP INSTL, fus sta 212 manual release tube *(see fig. 85)*	1	
-54	784220-109	CABLE INSTL, LH panel flight control *(see fig. 66, 72, 75, 79 and 80)*	1	6701-6720
	784220-107	CABLE INSTL, LH panel flight control *(see fig. 66, 72, 75, 79 and 80)*	1	6721-
-55	783162-501	CONTROL INSTL, LH fwd manual release systems *(see fig. 85, 86, 87, 90 and 91)*	1	
-56	783129-3	VALVE INSTL, rudder pedal brake *(see fig. 115)*	1	
	783322-103	CONTROL INSTL, RH fwd panel *(see fig. 30 for reqd)*	REF	6701-6765
	783322-105	CONTROL INSTL, RH fwd panel *(see fig. 30 for reqd)*	REF	6766-
-57	760355R	BRACKET INSTL, fus sta 249 flight control pulley *(see fig. 83)*	1	6701-6765
	760355-102	BRACKET INSTL, fus sta 249 flight control pulley *(see fig. 83)*	1	6766-
-58	760475R	BRACKET INSTL, fus sta 209 flight control pulley *(see fig. 83)*	1	6701-6720
	760475-102	BRACKET INSTL, fus sta 209 flight control pulley *(see fig. 83)*	1	6721-
-59	760508-3R	BRACKET INSTL, fus sta 258 flight control pulley *(see fig. 83)*	1	
-60	761047-3R	BRACKET INSTL, fus sta 264 nose wheel steering control *(see fig. 235)*	1	
-61	761565R	PULLEY INSTL, fus sta 249 nose wheel steering controls *(see fig. 235)*	1	
-62	761968R	GUIDE INSTL, fus sta 255 cable *(see fig. 72, 75 and 235)*	1	
-63	764708-101	TUNNEL INSTL, fus sta 267 to 335 RH control cable *(see fig. 39 and 189)*	1	
-64	763249	BRACKET INSTL, fus sta 267 turbine pump control pulley *(see fig. 89)*	1	
-65	763250	BRACKET INSTL, fus sta 255 turbine pump control pulley *(see fig. 89)*	1	
-66	763322	SUPPORT INSTL, fus sta 279, 294 and 315 turbine pump control *(see fig. 89)*	1	
-67	772092-3	SPRING INSTL, nose steering overland RH *(see fig. 235)*	1	
-68	783162-9	CONTROL INSTL, RH fus sta 184 to 358 manual release systems *(see fig. 89)*	1	
-69	784220-111	CABLE INSTL, RH panel flight control *(see fig. 66, 72 and 75)*	1	
	799618-103	CONTROL INSTL, fus sta 184 to 358 nozzle area emergency manual release *(see fig. 95)*	1	
	783375-103	CONTROL INSTL, LH mid panel *(see fig. 31 for reqd)*	REF	6701-6765
	783375-105	CONTROL INSTL, LH mid panel *(see fig. 31 for reqd)*	REF	6766-
	784919-1	BRACKET INSTL, fus sta 572 emergency nozzle area control *(see fig. 95)*	1	
-70	793559-1	TEE DRIVE INSTL, aileron trim stop *(see fig. 74)*	1	
-71	793291-1	ACTUATOR INSTL, fus sta 489 aileron trim stop *(see fig. 73)*	1	
-72	793292-1	TUBE INSTL, fus sta 505 LH side aileron torque *(see fig. 73)*	1	6701-6765
	793292-101	TUBE INSTL, fus sta 505 LH side aileron torque *(see fig. 73)*	1	6766-
-73	783063-3	BRACKET INSTL, mid fus throttle control longeron *(see fig. 81)*	1	
-74	783063-5	BRACKET INSTL, RH mid fus throttle control *(see fig. 81)*	1	
-75	762785	BRACKET INSTL, fus sta 497 drag chute release *(see fig. 93)*	1	
-76	768994-1	FAIRLEAD INSTL, fus sta 422 flight control cable *(see fig. 66)*	1	
-77	769240-7	FAIRLEAD INSTL, throttle cable (fus sta 388) *(see fig. 81)*	1	
-79	763114L	FAIRLEAD INSTL, fus sta 364 *(see fig. 80)*	1	
-80	788021-1	NAMEPLATE INSTL, stabilizer walking beam bolt instruction *(see fig. 76)*	1	
-81	799097-101	CLAMP INSTL, fus sta 539 to 579 drag chute release *(see fig. 93)*	1	
-82	763137	CLAMP INSTL, fus sta 340 to 489 drag chute release *(see fig. 92)*	1	
-83	769240-9	FAIRLEAD INSTL, throttle cable (fus sta 411) *(see fig. 81)*	1	
-84	769240-101	FAIRLEAD INSTL, throttle cable (fus sta 422) *(see fig. 81)*	1	
-85	769240-13	FAIRLEAD INSTL, throttle cable (fus sta 457 and 473) *(see fig. 81)*	2	
-86	769240-15	SEAL INSTL, throttle cable (fus sta 505) *(see fig. 81)*	1	
-87	783165-1	BRACKET INSTL, fus sta 520 drag chute release pulley *(see fig. 93)*	1	
	783997-101	CONTROL INSTL, RH mid panel *(see fig. 31 for reqd)*	REF	

Figura e particolare	NDR	1 2 3 4 5 6 7 DENOMINAZIONE	Quant.	Codice applicab.
63-88	791048-5	. . CONDUIT INSTL, aileron trim *(see fig. 74)*	1	
-89	768994-2	. . FAIRLEAD INSTL, fus sta 422 control cables *(see fig. 66)*	1	
-90	788021-2	. . NAMEPLATE INSTL, stabilizer walking beam bolt instruction *(see fig. 76)*	1	
-91	784482-1	. . TUBE INSTL, RH aileron torque *(see fig. 73)*	1	
	799617-101	. . CONTROL INSTL, fus sta 358 to 505 nozzle area emergency manual release *(see fig. 95)*	1	

Figura e particolare	NDR	DENOMINAZIONE 1 2 3 4 5 6 7	Quant.	Codice applicab.
		RUDDER AND BRAKE PEDALS		
64	851290-101	. PEDAL INSTL, LH rudder and brake *(see fig. 63 for reqd)*	REF	
	851290-102	. PEDAL INSTL, RH rudder and brake *(see fig. 63 for reqd)*	REF	
	783129-103	. . HANDLE ASSY, rudder and brake pedal LH	1	
- 1	NAS561P2-8	. . . PIN (80205)	1	
- 2	761028-101	. . . HANDLE ASSY, rudder pedal adjustment	1	
- 3	726207-101	. . . . HANDLE, rudder adjustment pedal *(see fig. 222)*	1	
- 4	726216-3	. . . . ADAPTER, emergency release cable	1	
- 5	770910-1	. . . CABLE ASSY, rudder pedal adjustment	1	
- 6	176663	. . . WASHER, handle	1	
- 7	763365	. . TUBE ASSY, rudder pedal adjustment cable LH	1	
- 8	MS21042L08	. . NUT, LH (96906)	2	
- 9	NAS602-10	. . SCREW, LH (80205)	2	
-10	AN170-5LS	. . EYE, LH (88044)	1	
-11	AN170-5RS	. . EYE, LH (88044)	1	
-12	AN155-5S	. . BARREL, LH (88044)	1	
	MS24665-132	. . COTTER PIN, LH (96906)	2	
-13	MS20392-2C9	. . PIN, LH (96906)	2	
-14	762310	. . SPLICE, rudder pedal adjustment cable LH	2	
-15	726208-3	. . SPRING, rudder pedal adjustment cable tension LH	1	
-16	NAS312H37-2520	. . CABLE ASSY, LH (80205)	1	
-17	MS21251B2S	. . BODY, turnbuckle LH (96906)	1	
-18	761022L	. . BARREL ASSY, inboard torque tube rudder	1	
-19	761022R	. . BARREL ASSY, inborad torque tube rudder	1	
		Attaching Parts		
-20	NAS1104-9	. . BOLT (80205)	1	
-21	NAS1104-14	. . BOLT (80205)	2	
-22	AN960D416	. . WASHER (88044)	3	
-23	MS21042L4	. . NUT (96906)	3	
		*		
-24	KP23BS	. . . BEARING, self-aligning ball (21335)	1	
-25	761022-3L	. . . BRACKET, inboard torque tube rudder	1	
-26	761022-3R	. . . BRACKET, inboard torque tube rudder	1	
-27	783121-3	. . PEDAL ASSY, rudder LH *(see fig. 65)*	1	
-28	783121-4	. . PEDAL ASSY, rudder RH *(see fig. 55)*	1	
-29	773353-1	. . SHIM, cockpit rudder torque tube aft	AR	
	762311	. BRACKET INSTL, center stand rudder pedal adjustment *(see fig. 63 for reqd)*	REF	
-30	763198	. . BRACKET ASSY, rudder pedal adjustment pulley	1	
-31	MS21042L3	. . NUT (96906)	1	
-32	NAS70A209-438	. . WASHER (under head) (80205)	1	
-33	NAS623-3-2	. . SCREW (80205)	1	
-34	MS21042L3	. . NUT (96906)	1	
-35	NAS623-3-12	. . SCREW (80205)	1	
-36	AN960D10	. . WASHER (spacer) (88044)	2	
-37	NAS70A209-438	. . WASHER (under head) (80205)	1	
-38	NAS427K12	. . PIN (80205)	1	
-39	M1B	. . PULLEY, control (83451)	1	
	762311-3	. . BRACKET ASSY, center stand rudder pedal adjustment	1	
-40	MS21042L3	. . . NUT (96906)	1	
-41	NAS623-3-10	. . . SCREW (80205)	1	
-42	M1B	. . . PULLEY, control (83451)	1	
-43	725442	. . . BRACKET, release cable	3	
-44	726314-3	. . . UNION, bracket	1	
	761029-15	. BRACKET INSTL, outboard rudder torque tube support *(see fig. 63 for reqd)*	REF	
-45	761029-4	. . BRACKET ASSY, outboard rudder torque tube support LH	1	
		Attaching Parts		
	NAS623-3-1	. . SCREW (80205)	4	
	MS21042L3	. . NUT (96906)	4	
		*		
-46	MS21042L3	. . . NUT (96906)	1	

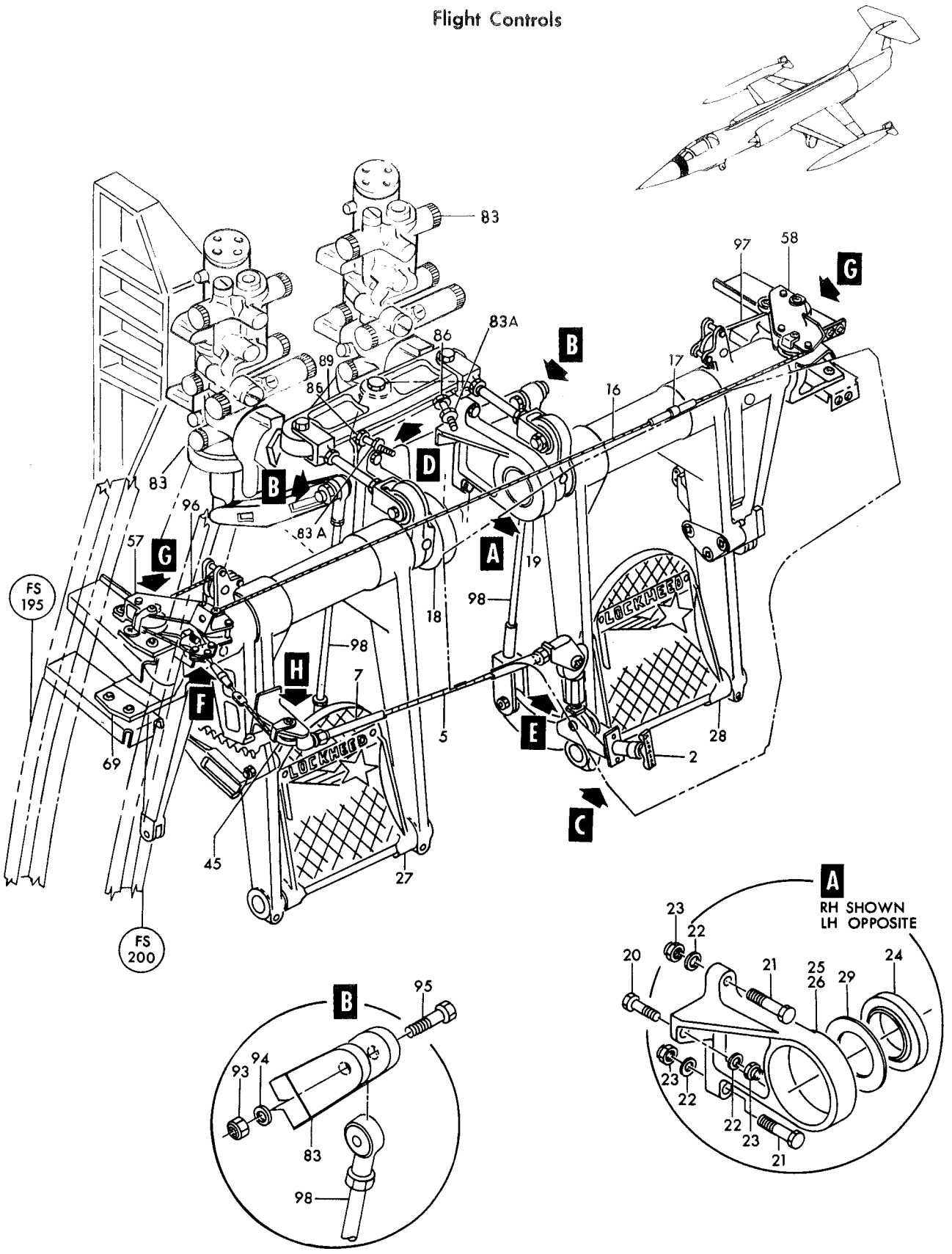

Figure 64— Rudder and Brake Pedals (Sheet 1 of 2)

Flight Controls

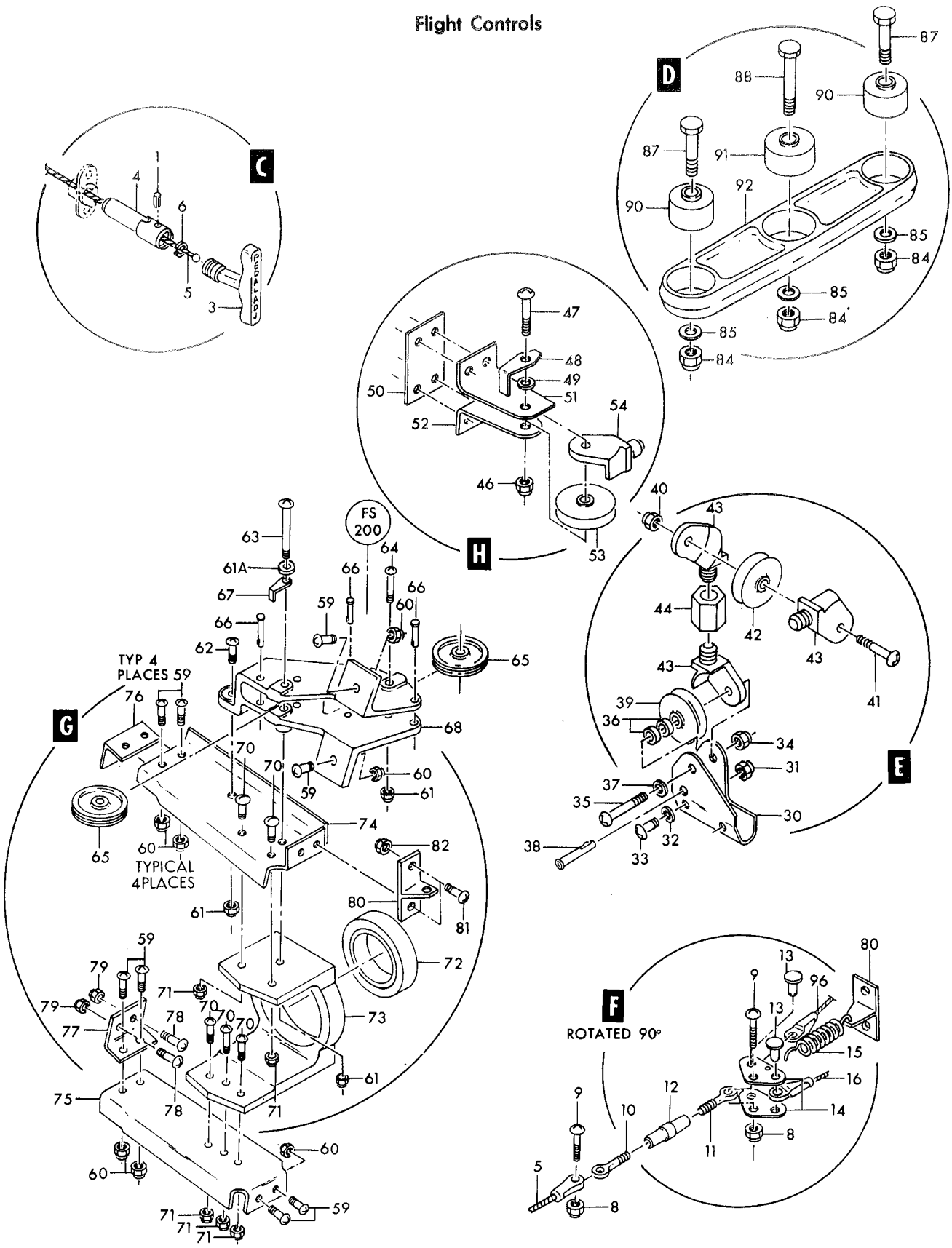

Figure 64— Rudder and Brake Pedals (Sheet 2 of 2)

Figura e particolare	NDR	DENOMINAZIONE 1 2 3 4 5 6 7	Quant.	Codice applicab.
64-47	NAS623-3-10	SCREW (80205)	1	
-48	761029-10	GUARD, outboard rudder torque tube support	1	
-49	AN960D10	WASHER (88044)	1	
-50	761029-11	PLATE, outboard rudder torque tube support	1	
-51	761029-12	BRACKET, outboard rudder torque tube support	1	
-52	761029-13	BRACKET, outboard rudder torque tube support	1	
-53	M1B	PULLEY, control (83451)	1	
-54	725442	BRACKET, release cable	1	
	761029-507	BRACKET INSTL, outboard rudder torque tube support LH *(see fig. 30 for reqd)*	REF	
	761029-504	BRACKET INSTL, outboard rudder torque tube support RH *(see fig. 30 for reqd)*	REF	
-57	761029-19	BRACKET ASSY, outboard rudder torque tube support LH	1	
-58	761029-3R	BRACKET ASSY, outboard rudder torque tube support RH	1	
		Attaching Parts		
-59	NAS623-3-1	SCREW (80205)	10	
-60	MS21042L3	NUT (96906)	10	
		*		
-61	MS21042L3	NUT (96906)	3	
-61A	AN960D10	WASHER (88044)	1	
-62	NAS623-3-4	SCREW (80205)	1	
-63	NAS1103-24	BOLT (80205) (NHA 761029-19)	1	
	NAS623-3-24	SCREW (80205) (NHA 761029-3R)	1	
-64	NAS623-3-14	SCREW (80205)	1	
-65	M1B	PULLEY, control (83451)	2	
-66	NAS427K13	PIN (80205) (3 reqd on 761029-19, 2 reqd on 761029-3R)	AR	
-67	761029-21	GUARD, outboard rudder torque tube support LH	1	
	761029-9	GUARD, outboard rudder torque tube support RH	1	
-68	762304L	BRACKET, fus sta 200 rudder pedal adjustment	1	
	762304R	BRACKET, fus sta 200 rudder pedal adjustment	1	
-69	761023	BRACKET ASSY, outborad rudder torque tube	1	
		Attaching Parts		
-70	NAS623-3-4	SCREW (80205)	5	
-71	MS21042L3	NUT (96906)	5	
		*		
-72	KP23BS	BEARING, self-aligning ball (21335)	1	
-73	761023-3	BRACKET, outboard rudder torque tube	1	
-74	761029-5L	INTERCOSTAL, outboard rudder torque tube support	1	
	761029-5R	INTERCOSTAL, outboard rudder torque tube support	1	
-75	761029-6L	INTERCOSTAL, outboard rudder torque tube support	1	
	761029-6R	INTERCOSTAL, outboard rudder torque tube support	1	
-76	761029-7L	CLIP, outboard rudder torque tube support	1	
	761029-7R	CLIP, outboard rudder torque tube support	1	
-77	761029-8L	CLIP, outboard rudder torque tube support	1	
	761029-8R	CLIP, outboard rudder torque tube support	1	
		Attaching Parts		
-78	NAS623-3-1	SCREW (80205)	2	
-79	MS21042L3	NUT (96906)	2	
		*		
-80	761029-16	BRACKET, outboard rudder torque tube support LH	1	
		Attaching Parts		
-81	NAS623-3-1	SCREW (80205)	2	
-82	MS21042L3	NUT (96906)	2	
		*		
-83	516250	VALVE, power or manual operating brake (A0809) (00502) (Lockheed spec dwg 662129-9) (see T.O. 9HB-30-30-4) *(see fig. 115 for reqd)*	REF	
	783129-9	BEAM INSTL, rudder and brake *(see fig. 69 for reqd)*	REF	
-83A	MS21042L5	NUT (96906)	2	
-84	AN320-5	NUT (88044)	3	
-85	AN960D516	WASHER (88044)	3	
-86	NAS428K5-20	BOLT (80205)	2	
-87	NAS1105-15D	BOLT (80205)	2	

Figura e particolare	NDR	DENOMINAZIONE	Quant.	Codice applicab.
64-88	NAS1205-24D	SCREW (80205)	1	
	MS24665-134	COTTER PIN (96906)	3	
-89	761021	BEAM ASSY, rudder walking *(see fig. 65)*	1	
-90	AN206DSP5	BEARING (88044)	2	
-91	AN207DPP5	BEARING (88044)	1	
-92	761021-3	BEAM	1	
-93	MS21042L4	NUT (96906)	2	
-94	AN960D416	WASHER (88044)	2	
-95	NAS1104-15	BOLT (80205)	2	
-96	NAS312H32-1250	CABLE ASSY, LH (80205) *(see fig. 65 for reqd)*	REF	
-97	NAS302-26-187	CABLE ASSY, RH (80205) *(see fig. 65 for reqd)*	REF	
-98	783122-1	PUSH ROD ASSY, brake pedal *(see fig. 65 for reqd)*	REF	

Figura e particolare	NDR	DENOMINAZIONE 1 2 3 4 5 6 7	Quant.	Codice applicab.
		RUDDER AND BRAKE PEDALS ASSEMBLY		
65	783121-3	PEDAL ASSY, rudder LH *(see fig. 64 for reqd)*	REF	
	783121-4	PEDAL ASSY, rudder RH *(see fig. 64 for reqd)*	REF	
	MS24665-132	. COTTER PIN (96906)	1	
- 1	MS20392-2C9	. PIN (96906)	1	
- 2	NAS312H32-1250	. CABLE ASSY, LH (80205) *(see fig. 64)*	1	
	NAS302-26-187	. CABLE ASSY, RH (80205) *(see fig. 64)*	1	
- 3	NAS427K13	. PIN (80205)	2	
- 4	MS21042L3	. NUT (96906)	1	
- 5	NAS623-3-12	. SCREW (80205)	1	
- 6	M1B	. PULLEY, anti-friction control (83451)	1	
- 7	726133-3	. SPRING, pedal adjustment	1	
- 8	MS21042L4	. NUT (96906)	2	
- 9	AN960D416	. WASHER (88044)	2	
-10	NAS1204-24	. SCREW (80205)	2	
-11	761764	. BRACKET, pedal adjustment spring	1	
-12	775605-1	. SPACER, rudder pedal assy	1	
-13	MS21042L4	. NUT (96906)	1	
-14	AN960D416	. WASHER (88044)	1	
-15	NAS1204-18	. SCREW (80205)	1	
-16	775865-1	. PLATE, rudder pedal adjustment LH	1	
	775865-2	. PLATE, rudder pedal adjustment RH	1	
	MS24665-132	. COTTER PIN (96906)	1	
-17	MS20392-2C21	. PIN (96906)	1	
-18	761822	. PIN, rudder pedal adjustment	1	
-19	726132-3	. SPRING, rudder pedal compression adjusting pin	1	
-20	AN960-516	. WASHER (88044)	1	
-21	AN320-4	. NUT (88044)	1	
-22	AN975-4	. WASHER (88044)	1	
-23	AN386-3-17	. PIN (88044)	1	
-24	761026L	. HORN, rudder control *(see fig. 235)*	1	
	761026R	. HORN, rudder control *(see fig. 235)*	1	
-25	MS21042L4	. NUT (96906)	1	
-26	AN960D416	. WASHER (88044)	1	
-27	NAS623-4-12	. SCREW (80205)	1	
	783122-1	. PUSH ROD ASSY, brake pedal *(see fig. 64)*	1	
-28	RE4F5	. . BEARING, female anti-friction rod end (21335)	1	
-29	783123-1	. . FORK, power brake	1	
-30	AN316-5R	. . NUT (88044)	2	
-31	783122-3	. . ROD, brake pedal	1	
-32	MS21042L3	. NUT (96906)	2	
-33	NAS623-3-18	. SCREW (80205)	2	
-34	761821	. TUBE, rudder pedal	1	
-35	783127-1	. PEDAL ASSY, brake LH	1	
	783127-2	. PEDAL ASSY, brake RH	1	
-36	812120H	. . BEARING, needle (60380)	2	
-37	AN200KS4	. . BEARING (88044)	1	
-38	783127-3	. . PEDAL, brake LH	1	
	783127-4	. . PEDAL, brake RH	1	
-39	AN320-5	. NUT (88044)	1	
-40	AN960D516	. WASHER (88044)	1	
-41	NAS1105-15D	. BOLT (80205)	1	
	761032-3	. PUSH ROD ASSY, rudder walking beam	1	
-42	226415-3	. . CLEVIS, rudder pedal walking beam	1	
-43	226415-2	. . CLEVIS, rudder pedal walking beam	1	
-44	AN316-6L	. . NUT (88044)	1	
-45	AN316-6R	. . NUT (88044)	1	
-46	761032-4	. . ROD, rudder walking beam	1	
-47	AN320-4	. NUT (88044)	1	
-48	AN975-4	. WASHER (88044)	1	

Figura e particolare	NDR	DENOMINAZIONE	Quant.	Codice applicab.
65-49	AN386-3-16	. . PIN (88044)	1	
-50	761163	. . CRANK ASSY, rudder centering mechanism	1	
-51	AN206DSP5	. . . BEARING (88044)	1	
	761163-3	. . . CRANK, rudder centering mechanism	1	
-52	761027	. . TUBE, rudder pedal torque	1	
	761024	. . HANGER ASSY, rudder pedal	1	
-53	175576	. . . BUSHING, rudder pedal hanger	2	
-54	761024-3	. . . HANGER, rudder pedal	1	
-55	761021	. BEAM ASSY, rudder walking *(see fig. 64 for reqd)*	REF	
-56	761879-3	. CABLE ASSY, rudder forward *(see fig. 66 for reqd)*	REF	

Flight Controls

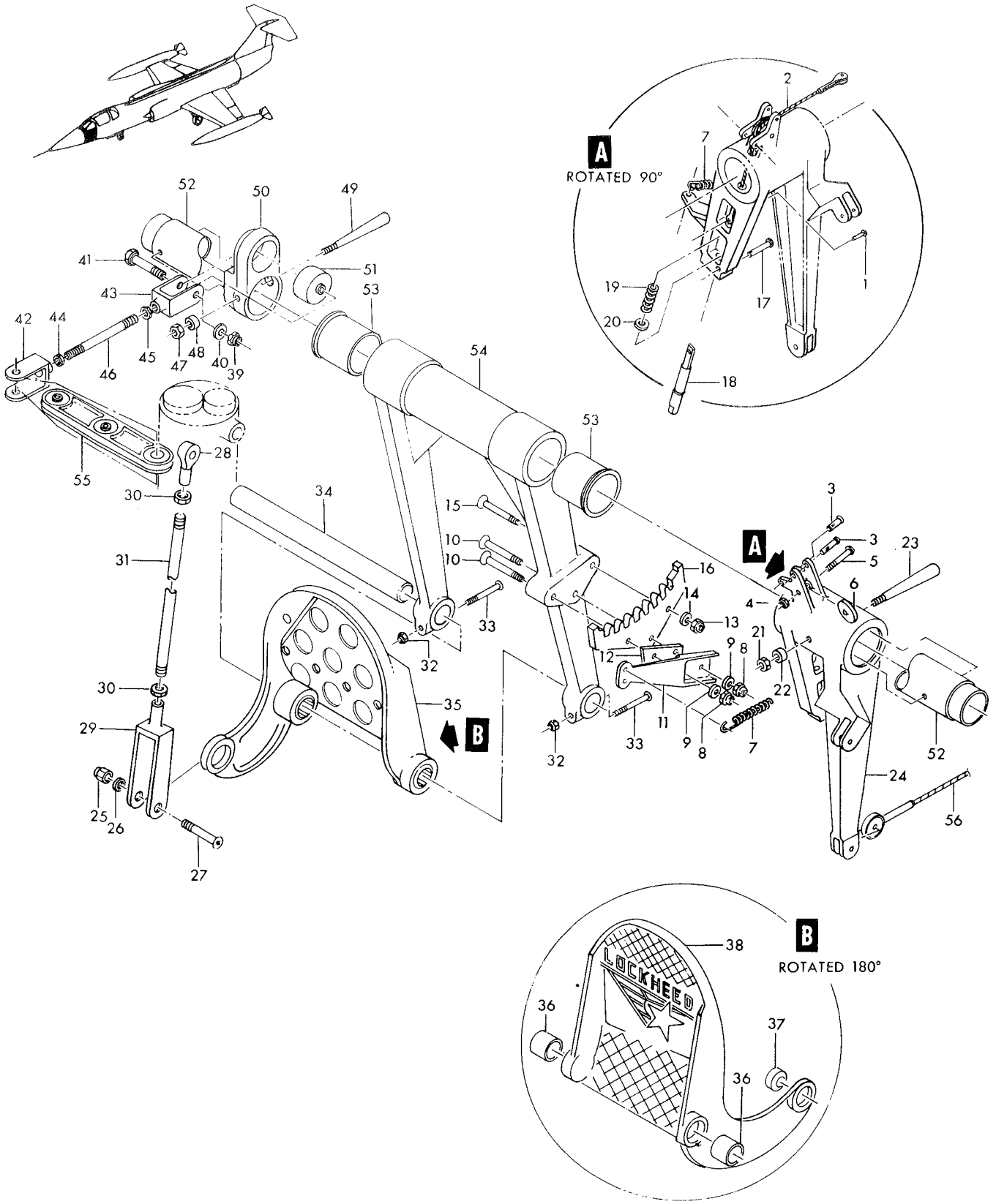

Figure 65—Rudder and Brake Pedals Assembly

Figura e particolare	NDR	DENOMINAZIONE 1 2 3 4 5 6 7	Quant.	Codice applicab.
		RUDDER CONTROLS FUSELAGE STATION 200 TO 614		
66	784220-109	. CABLE INSTL, LH panel flight control *(see fig. 63 for reqd)*	REF	6701-6720
	784220-107	. CABLE INSTL, LH panel flight control *(see fig. 63 for reqd)*	REF	6721-
	784220-111	. CABLE INSTL, RH panel flight control *(see fig. 63 for reqd)*	REF	
	MS24665-134	. . COTTER PIN (96906)	1	
- 1	AN320-3	. . NUT (88044)	1	
- 2	AN960D10	. . WASHER (88044)	1	
- 3	AN23-14	. . BOLT (88044)	1	
- 4	761879-3	. . CABLE ASSY, rudder forward *(see fig. 65)*	1	
	761879-10	. . . CABLE, rudder forward	1	
- 5	4020-3	. . . CABLE END (89660)	1	
- 6	AN669S4RH	. . . TERMINAL (88044)	1	
- 7	NAS649B32S	. . BARREL (80205)	1	
- 8	761879-5	. . CABLE ASSY, rudder center	1	
	761879-12	. . . CABLE, rudder center	1	
- 9	4020-3	. . . CABLE END (89660)	1	
-10	AN669S4LH	. . . TERMINAL (88044)	1	
	MS24665-134	. . COTTER PIN (96906)	1	
-11	AN320-3	. . NUT (88044)	1	
-12	AN960D10	. . WASHER (88044)	1	
-13	AN23-13	. . BOLT (88044)	1	
-14	760475-3L	. BRACKET ASSY, fus sta 209 flight control pulley *(see fig. 83 for reqd)*	REF	6701-6720
	760475-103	. BRACKET ASSY, fus sta 209 flight control pulley LH *(see fig. 83 for reqd)*	REF	6721-
-15	760475-3R	. BRACKET ASSY, fus sta 209 flight control pulley *(see fig. 83 for reqd)*	REF	6701-6720
	760475-104	. BRACKET ASSY, fus sta 209 flight control pulley RH *(see fig. 83 for reqd)*	REF	6721-
-16	760355-3L	. BRACKET ASSY, fus sta 249 flight control pulley *(see fig. 83 for reqd)*	REF	6701-6765
	760355-103	. BRACKET ASSY, fus sta 249 flight control pulley LH *(see fig. 83 for reqd)*	REF	6766-
-17	760355-3R	. BRACKET ASSY, fus sta 249 flight control pulley *(see fig. 83 for reqd)*	REF	6701-6765
	760355-104	. BRACKET ASSY, fus sta 249 flight control pulley RH *(see fig. 83 for reqd)*	REF	6766-
-18	760508-5L	. BRACKET ASSY, fus sta 258 flight control pulley *(see fig. 83 for redq)*	REF	
-19	760508-5R	. BRACKET ASSY, fus sta 258 flight control pulley *(see fig. 83 for reqd)*	REF	
-20	771540-101	. TUNNEL ASSY, LH fus sta 335 flight control bellcrank *(see fig. 84 for reqd)*	REF	
-21	771551-103	. TUNNEL ASSY, RH fus sta 335 flight control bellcrank *(see fig. 84 for reqd)*	REF	
	784220-105	. CABLE INSTL, mid fus flight control *(see fig. 63 for reqd)*	REF	
	MS24665-132	. . COTTER PIN (96906)	2	
-22	AN320-3	. . NUT (88044)	2	
-23	AN960D10	. . WASHER (88044)	2	
-24	AN23-13	. . BOLT (88044)	2	
-25	D6-1001-5L3A	. . DISCONNECT ASSY, cable (45402) *(see fig. 67)*	2	
-26	LS1001	. . CLIP, fairlead bushing retainer (36659)	2	
-27	764894-103	. . SEAL, fus sta 505 cable split	4	
-27A	852005-101	. . CLAMP RING, fus sta 505 cable seal	2	
-28	761879-17	. . CABLE ASSY, aft rudder control *(see fig. 67)*	2	
	761879-19	. . . CABLE, aft rudder control	1	
-29	LCB125	. . . CABLE END (83548)	1	
-30	NAS650S4RH	. . . TERMINAL (80205)	1	
-31	MS20664C4	. . . TERMINAL (96906)	1	
	768994-1	. FAIRLEAD INSTL, fus sta 422 flight control cable *(see fig. 63 for reqd)*	REF	
	768994-2	. FAIRLEAD INSTL, fus sta 422 flight control cable *(see fig. 63 for reqd)*	REF	
-32	768995-1	. . FAIRLEAD, fus sta 422 flight control cable	1	
		Attaching Parts		
-33	NAS221-10	. . SCREW (80205)	2	
-34	AN960D10	. . WASHER (88044)	2	
-35	MS21042L3	. . NUT (96906)	2	
-36	761042-11	. BRACKET ASSY, fus sta 505 flight control pulley *(see fig. 77 for reqd)*	REF	

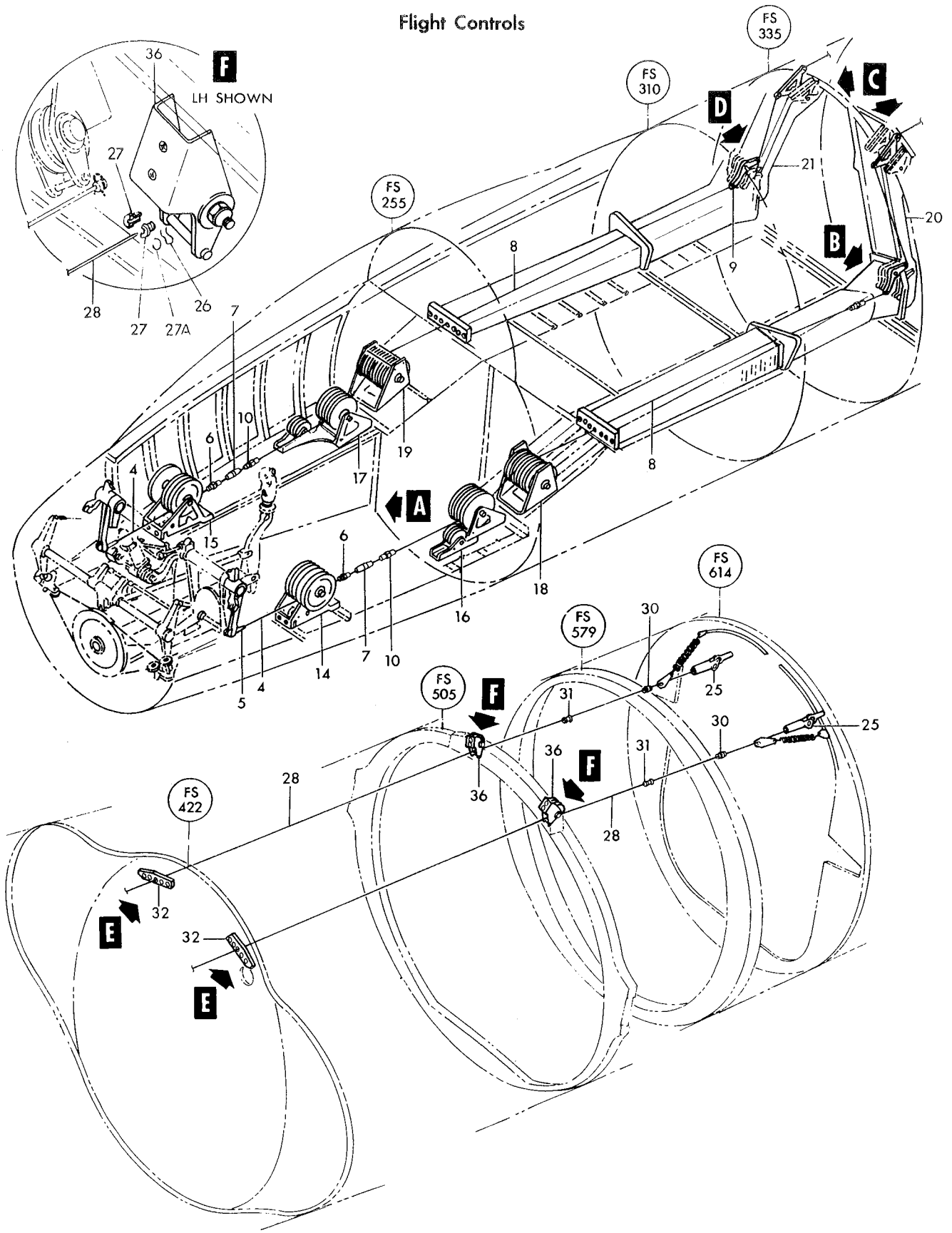

Figure 66— Rudder Controls Fuselage Station 200 to 614 (Sheet 1 of 2)

Flight Controls

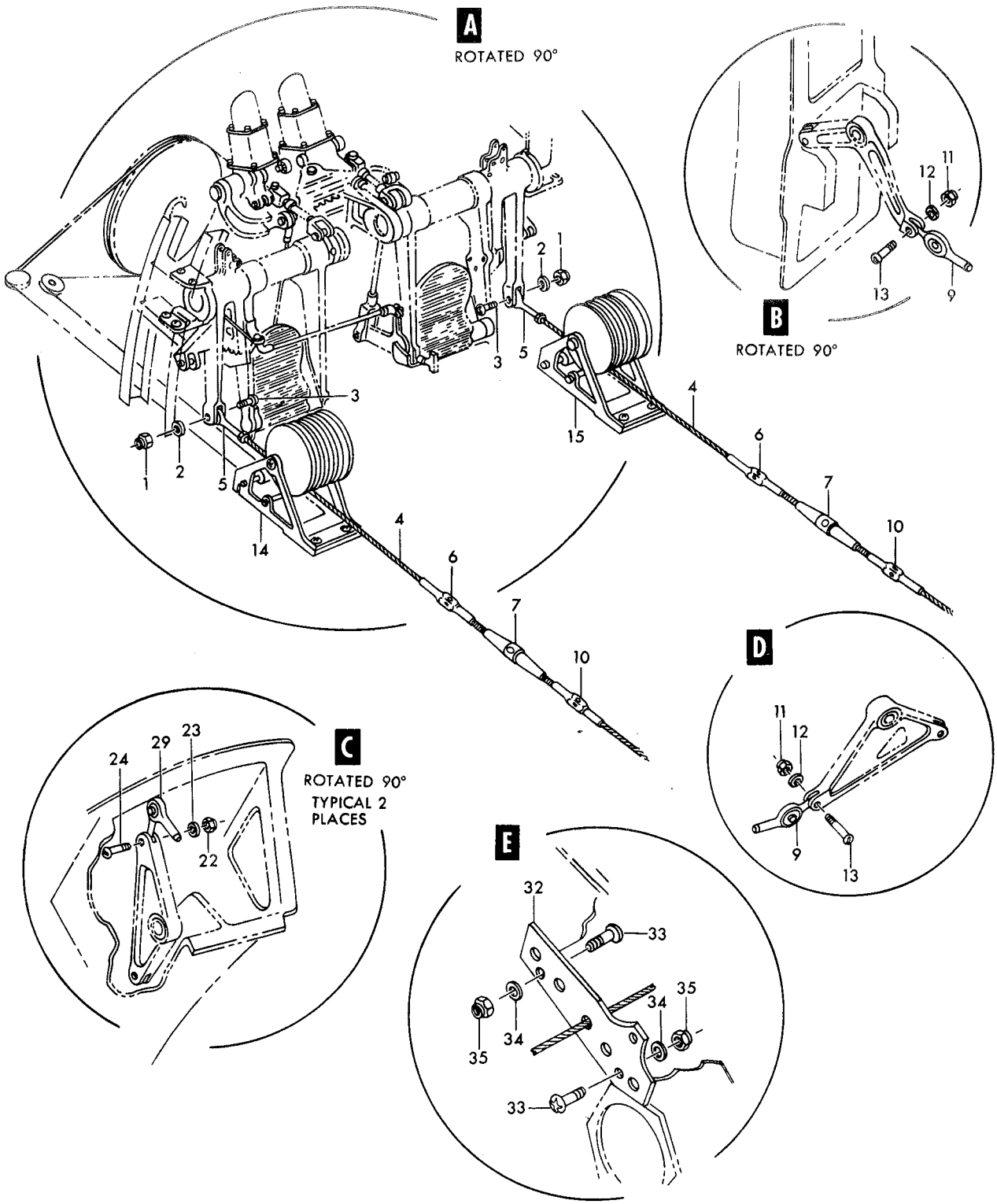

Figure 66— Rudder Controls Fuselage Station 200 to 614 (Sheet 2 of 2)

Figura e particolare	NDR	DENOMINAZIONE 1 2 3 4 5 6 7	Quant.	Codice applicab.
		RUDDER CONTROLS FUSELAGE STATION 614 AFT		
67-1	761879-17	CABLE ASSY, aft rudder control *(see fig. 66 for reqd)*	REF	
-2	D6-1001-5L3A	DISCONNECT ASSY, cable (45402) *(see fig. 66 for reqd)*	REF	
	784220-103	CABLES INSTL, aft fuselage *(see fig. 32 for reqd)*	REF	
-3	768498-103	CABLE ASSY, rear rudder *(see fig. 28)*	1	6701-6830
	768498-105	CABLE ASSY, rear rudder *(see fig. 28)*	1	6831-
	NAS650L4LH	TERMINAL (80205)	2	
	847046-101	SLEEVE, rudder cable	1	
	768498-3	CABLE, rear rudder	1	6701-6830
	768498-107	CABLE, rear rudder	1	6831-
	767561-1	TAB INSTL, fus sta 614 rudder cable *(see fig. 42 for reqd)*	REF	
	851954-101	TAB INSTL, fus sta 614 rudder cable *(see fig. 42 for reqd)*	REF	6701-6800
	767561-2	TAB INSTL, fus sta 614 rudder cable *(see fig. 42 for reqd)*	REF	6801-
-4	763691	TAB, fus sta 614 rudder cable spring	1	
	763653-4L	SPRING INSTL, fus sta 614 rudder cable *(see fig. 63 for reqd)*	REF	
	763653-4R	SPRING INSTL, fus sta 614 rudder cable *(see fig. 63 for reqd)*	REF	
-5	763692	SPRING ATTACHMENT, fus sta 614 rudder cable	1	
-6	726409-3	SPRING, fus sta 614 rudder cable	1	
	763582L	BRACKET INSTL, fus sta 620 rudder cable fairlead *(see fig. 32 for reqd)*	REF	
	763582R	BRACKET INSTL, fus sta 620 rudder cable fairlead *(see fig. 32 for reqd)*	REF	
-7	763581	BRACKET ASSY, fus sta 620 rudder cable fairlead	1	
		Attaching Parts		
-8	NAS623-3-1	SCREW (80205)	3	
-9	MS21042L3	NUT (96906)	3	
		✲		
-10	LS1002	CLIP, rudder cable fairlead (36659)	1	
-11	726401-3	FAIRLEAD, fus sta 620 rudder cable	2	
-12	763580	BRACKET, fus sta 620 rudder cable fairlead	1	
	760968-101	BRACKET INSTL, fus sta 640 rudder cable pulley *(see fig. 32 for reqd)*	REF	
	760968-102	BRACKET INSTL, fus sta 640 rudder cable pulley *(see fig. 32 for reqd)*	REF	
-13	760967L	BRACKET, fus sta 640 rudder cable pulley	1	
-14	760967R	BRACKET, fus sta 640 rudder cable pulley	1	
		Attaching Parts		
-15	NAS623-3-11	SCREW (80205)	2	
-16	AN960D10	WASHER (88044)	2	
-16A	LS1551-190-688	WASHER (36659)	2	
-17	MS21043-3	NUT (96906)	2	
		✲		
-18	AN320-5	NUT (88044)	1	
-19	AN960D516	WASHER (88044)	1	
-20	AN5-13	BOLT (88044)	1	
-21	LS9020A2	PULLEY, control (36659)	1	
-22	NAS427K18	PIN (80205)	2	
	MS24665-153	COTTER PIN (96906)	1	
	778312-3	FAIRLEAD INSTL, fus sta 639 rudder cable *(see fig. 32 for reqd)*	REF	
-23	LS1002	CLIP, rudder cable fairlead (36659)	1	
-24	728051-3	FAIRLEAD, fus sta 639 rudder cable	2	
-25	783182-1	QUADRANT ASSY, rudder servo pilot input *(see fig. 32 for reqd)*	REF	

Flight Controls

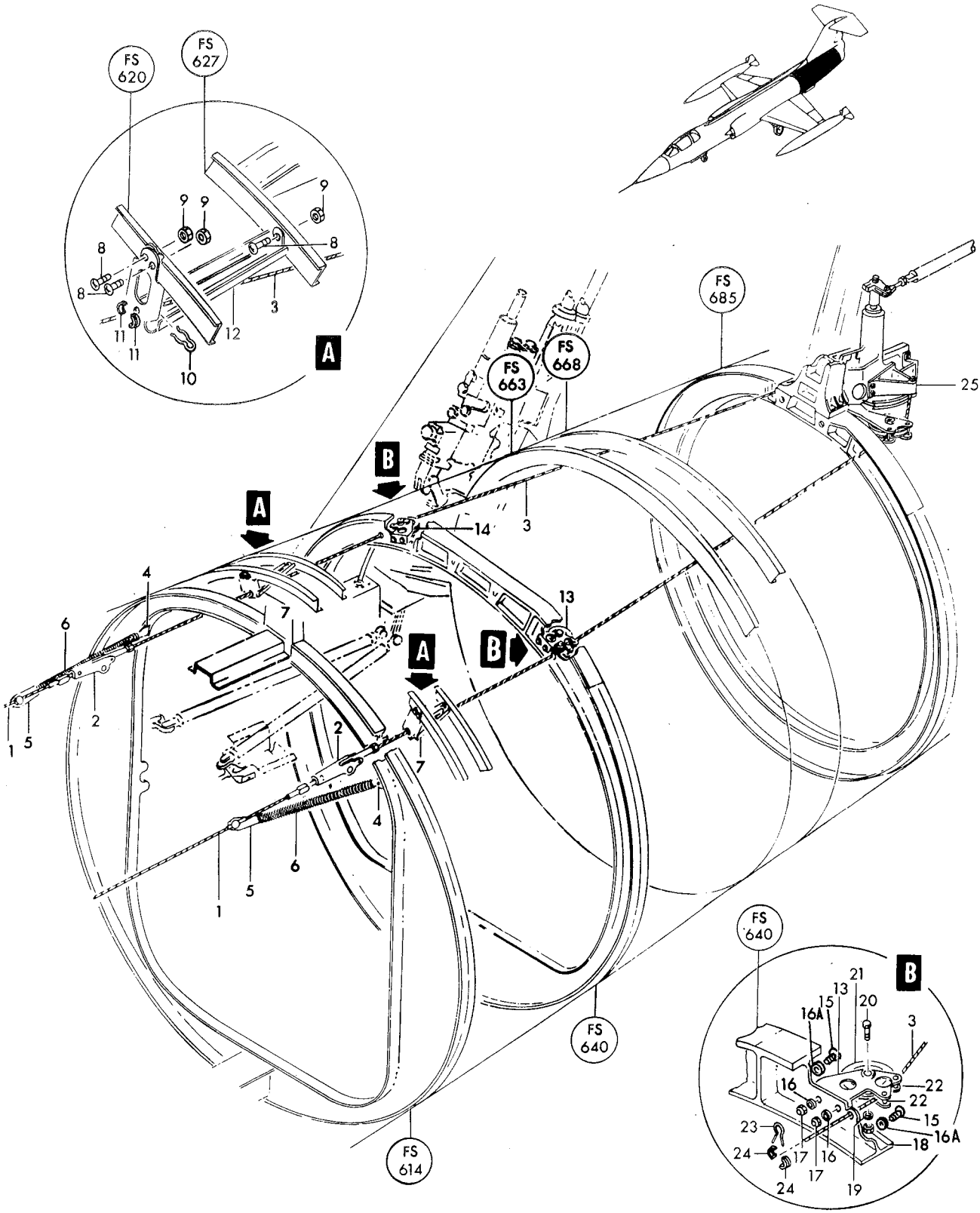

Figure 67—Rudder Controls Fuselage Station 614 Aft

Figura e particolare	NDR	DENOMINAZIONE	Quant.	Codice applicab.
		COCKPIT AILERON CONTROL		
68- 1	AN320-5	NUT (88044) *(see fig. 71 for reqd)*	REF	
- 1A	AN960-516	WASHER (88044) *(see fig. 71 for reqd)*	REF	
- 1B	306779	SHIM *(see fig. 71 for reqd)*	REF	
- 1C	AN175H31	BOLT (88044) *(see fig. 71 for reqd)*	REF	
	783459-105	CONTROL AND STAND ASSY, cockpit aileron and stabilizer *(see fig. 69 for reqd)*	REF	6701-6740
	783459-111	CONTROL AND STAND ASSY, cockpit aileron and stabilizer *(see fig. 69 for reqd)*	REF	6741-
	MS24665-134	COTTER PIN (96906)	2	
- 2	AN320-3	NUT (88044)	2	
- 3	AN960D10	WASHER (88044)	2	
- 4	AN23-17	BOLT (88044)	2	
- 5	760745	PLUNGER, aileron centering	1	
- 6	AN960-516L	WASHER (88044)	1	
- 7	AN316-5R	NUT (88044)	2	
- 8	725990-3	SPRING, aileron centering	1	
- 9	760746	TERMINAL, aileron centering	1	
	MS24665-134	COTTER PIN (96906)	1	
-10	AN320-4	NUT (88044)	1	
-11	AN960-416L	WASHER (88044)	1	
-12	AN4-26	BOLT (88044)	1	
	726145-4	SHIM, washer	AR	
-13	726016-3	BUSHING, aileron torque tube centering arm	1	
-14	760753	ARM, aileron centering device	1	
	MS24665-134	COTTER PIN (96906)	1	
-15	AN320-3	NUT (88044)	1	
-16	AN960D10	WASHER (88044)	2	
-17	AN23-16	BOLT (88044)	1	
-18	AN960-10L	WASHER (below bearing) (88044)	AR	
-19	K3LR48	BEARING, roller (21335)	1	
-20	MS21042L3	NUT (96906)	2	
-21	AN960-10L	WASHER (88044)	2	
-22	NAS1103-4	BOLT (80205)	2	
-23	766801-101	CAM, aileron centering	1	
-24	MS21042L08	NUT (96906)	2	
-25	AN960-8	WASHER (88044)	2	
-26	AN515-8R16	SCREW (88044)	2	
-27	761211	CLIP, aileron cable retaining	2	
	784220-1	CABLES INSTL, control stand	1	
-28	761561-45	. CABLE ASSY, forward aileron control *(see fig. 72)*	2	
	761561-47	. . LOCKCLAD ASSY, aileron control	1	
-29	760635	. . . SLEEVE, aileron cable	1	
-30	MS21042L3	NUT (96906)	4	
-31	AN970-3	WASHER (88044)	4	
-32	NAS43DD3-56	SPACER (80205)	4	
-33	NAS623-3-12	SCREW (80205)	4	
-34	NAS428-5-10	BOLT (80205)	2	
-35	AN960D516	WASHER (88044)	2	
-36	AN316-5R	NUT (88044)	2	
-37	AN174H6A	BOLT (88044)	4	
-38	AN960-416	WASHER (88044)	4	
-39	726145-3	SHIM, washer	AR	
	760973-101	TORQUE TUBE ASSY, aileron	1	
-40	MS21042L4	. NUT (96906)	4	
-41	760761	. WASHER, aileron quadrant	4	
-42	AN960-416L	. WASHER (under bolt head) (88044)	4	
-43	AN174H7A	. BOLT (88044)	4	
-44	760750	. QUADRANT, fus sta 186 aileron cable	1	
-45	MS21042L3	. NUT (96906)	6	

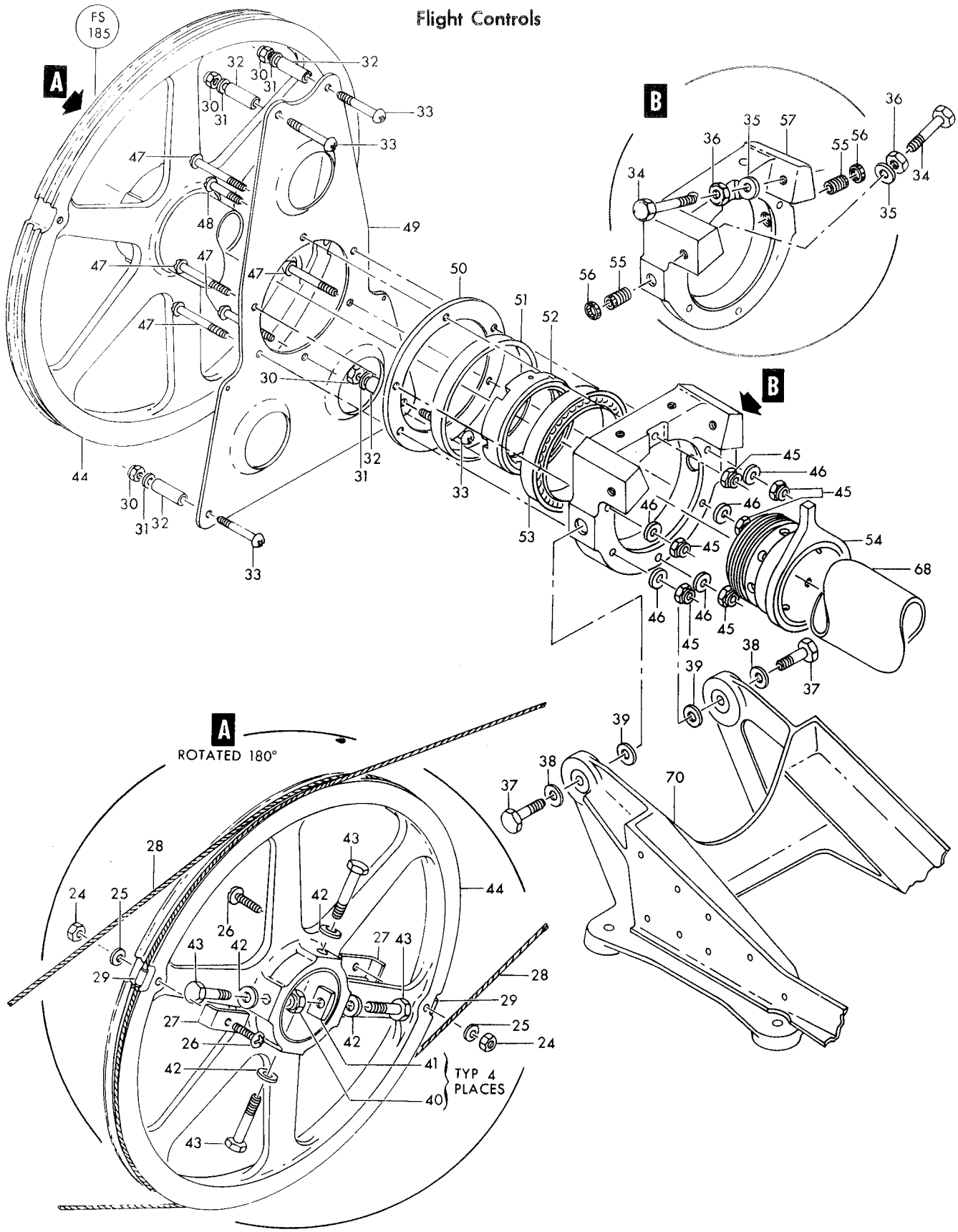

Figure 68—Cockpit Aileron Control (Sheet 1 of 2)

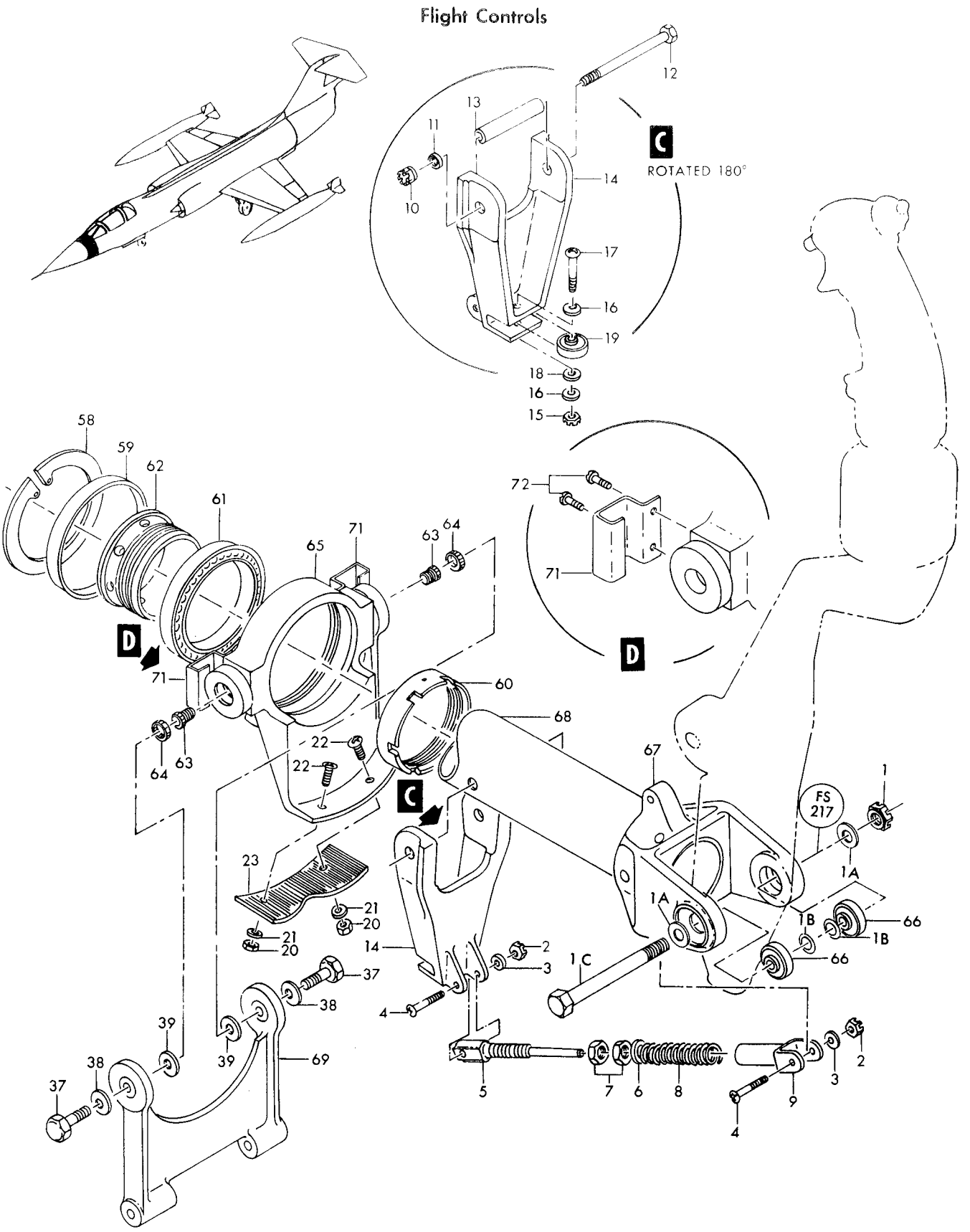

Figure 68—Cockpit Aileron Control (Sheet 2 of 2)

Figura e particolare	NDR	1 2 3 4 5 6 7 DENOMINAZIONE	Quant.	Codice applicab.
68-46	AN960D10	WASHER (88044)	5	
-47	NAS623-3-16	SCREW (80205)	5	
-48	NAS623-3-12	SCREW (80205)	1	
-49	760751	GUARD, aileron quadrant cable	1	
-50	760882	RETAINER, aileron torque tube bearing	1	
-51	760760-3	RING, torque tube bearing retainer	1	
	MS24665-134	COTTER PIN (96906)	1	
-52	175383	RETAINER, torque tube seal	1	
-53	AN202KP37B	BEARING (88044)	1	
-54	761327	STOP ASSY, aileron torque tube *(see fig. 70)*	1	
	771905-1	HOUSING ASSY, forward aileron torque tube bearing *(see fig. 70)*	1	
-55	R206SB8	. INSERT, screw thread (83324)	2	
-56	RL28SB8	. LOCKRING (98524)	2	
-57	771905-3	. HOUSING, forward aileron torque tube bearing	1	
-58	MS16625-1306	RING (96906)	1	
-59	760760-4	RING, torque tube bearing retainer	1	
	MS24665-134	COTTER PIN (96906)	1	
-60	175383	RETAINER, torque tube seal	1	
-61	AN202KP37B	BEARING (88044)	1	
-62	760749	RETAINER, aileron torque tube bearing	1	
	760754-101	HOUSING ASSY, aileron torque tube bearing	1	
-63	R206SB8	. INSERT, screw threac (83324)	2	
-64	RL28SB8	. LOCKRING (98524)	2	
-65	760754-103	. HOUSING, aileron torque tube bearing	1	
	760759	YOKE ASSY, pilots control stick	1	
-66	AN201KP5A	. BEARING (88044)	2	
-67	760759-3	. YOKE, pilot's control stick *(see fig. 71)*	1	
-68	760756	TORQUE TUBE, aileron	1	
-69	760758	. LINK ASSY, aileron actuating torque tube *(see fig. 69 for reqd)*	REF	
-70	760629	SUPPORT ASSY, aileron torque tube *(see fig. 69 for reqd)*	REF	
-71	783459-101	BRACKET, cockpit aileron and stabilizer control (NHA 783459-103) (NHA 783459-109)	1	
	783459-102	BRACKET, cockpit aileron and stabilizer control (NHA 783459-103) (NHA 783459-109)	1	
		Attaching Parts		
-72	AN503-6-6	SCREW (88044)	2	

*

Figura e particolare	NDR	DENOMINAZIONE	Quant.	Codice applicab.
		CONTROL STICK PUSHRODS AND CENTERING MECHANISM		
69- 1	AN175H14	BOLT (88044) *(see fig. 71 for reqd)*	REF	
	783459-103	CONTROL INSTL, cockpit aileron and stabilizer *(see fig. 63 for reqd)*	REF	6701-6740
	783459-109	CONTROL INSTL, cockpit aileron and stabilizer *(see fig. 63 for reqd)*	REF	6741-
- 2	760631	BRACKET ASSY, elevator torque tube outboard bearing	2	
		Attaching Parts		
- 3	NAS1104-10	BOLT (80205)	2	
- 4	AN960D416	WASHER (88044)	2	
- 5	MS21042L4	NUT (96906)	2	
- 6	KP21BS	BEARING, self-aligning ball (21335)	1	
- 7	760631-3	BRACKET, elevator torque tube outboard bearing	1	
- 8	727798-1	SHIM, aileron and stabilizer torque tube	AR	
	783459-105	CONTROL AND STAND ASSY, cockpit aileron and stabilizer *(see fig. 68)*	1	6701-6740
	783459-111	CONTROL AND STAND ASSY, cockpit aileron and stabilizer *(see fig. 68)*	1	6741-
		Attaching Parts		
-26	NAS1104-10	BOLT (80205)	4	
-27	AN4-7A	BOLT (88044)	2	
-28	AN4-10A	BOLT (88044)	2	
-29	AN960D416	WASHER (88044)	4	
-30	AN960-416L	WASHER (88044)	4	
-31	AN960-416	WASHER (88044)	2	
-32	762168	SHIM, bearing bracket	AR	
-33	MS21042L4	NUT (96906)	4	
	MS24665-134	COTTER PIN (96906)	1	
-34	AN320-4	NUT (88044)	1	
-35	AN960D416	WASHER (88044)	1	
-36	AN174-12	BOLT (88044)	1	
-37	782910-503	PUSH ROD ASSY, stabilizer *(see fig. 71)*	1	
-38	256596	RING, elevator arm bearing retainer nut	1	
-39	765149	HOUSING, stabilizer push rod bearing	1	
	MS24665-283	COTTER PIN (96906)	1	
-40	AN310-6	NUT (88044)	1	
-41	AN960-616	WASHER (88044)	1	
-42	765148	TERMINAL, stabilizer push rod	1	
-43	DW6	BEARING, ball double rod (21335)	1	
-44	MR4	BEARING, rod end (77896)	1	
-45	AN316-6R	NUT (88044)	1	
-46	782911-503	TUBE ASSY, stabilizer push rod	1	
-47	728344-1	SPRING, bobweight balance	2	
	MS24665-134	COTTER PIN (96906)	4	
-48	AN320-4	NUT (88044)	4	
-49	AN960D416	WASHER (88044)	6	
-50	AN174-12	BOLT (88044)	2	
-51	AN174-13	BOLT (88044)	2	
-52	760755	ROD ASSY, stabilizer bellcrank actuating	2	
-53	RE4M6	BEARING, rod end (21335)	1	
-54	AN316-6L	NUT (88044)	1	
-55	RE4ML6	BEARING, rod end (21335)	1	
-56	AN316-6R	NUT (88044)	1	
-57	760757	ROD ASSY, bellcrank actuating	1	
	MS24665-134	COTTER PIN (96906)	1	
-58	AN320-4	NUT (88044)	1	
-59	AN960-416	WASHER (88044)	1	
-60	AN174-57	BOLT (88044)	1	
-61	726145-3	SHIM, washer	AR	
-62	760758	LINK ASSY, aileron torque tube actuating *(see fig. 68)*	1	
-63	AN201KP4A	BEARING (88044)	2	
-64	760758-3	LINK, aileron torque tube	1	

Flight Controls

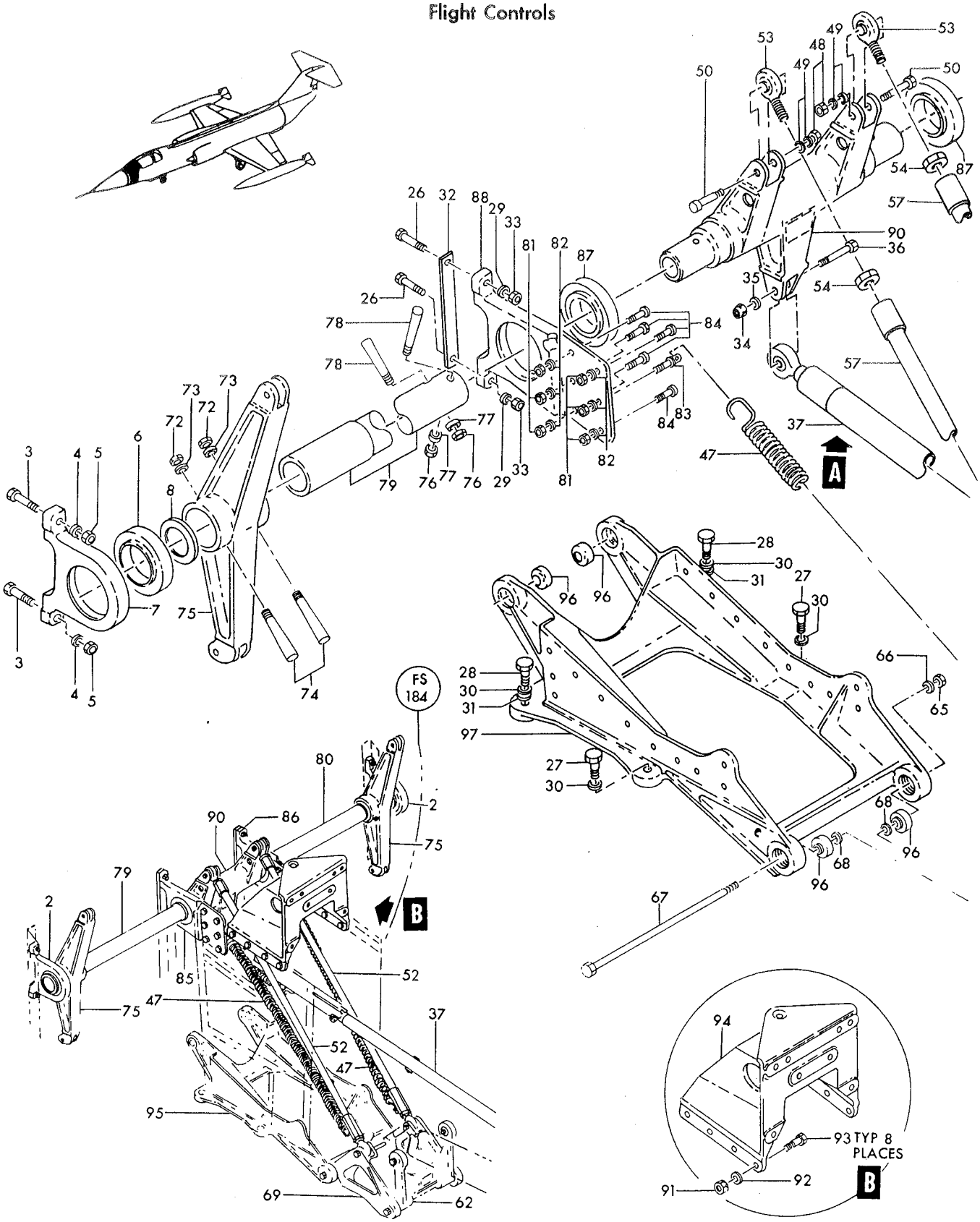

Figure 69— Control Stick Pushrods and Centering Mechanism (Sheet 1 of 2)

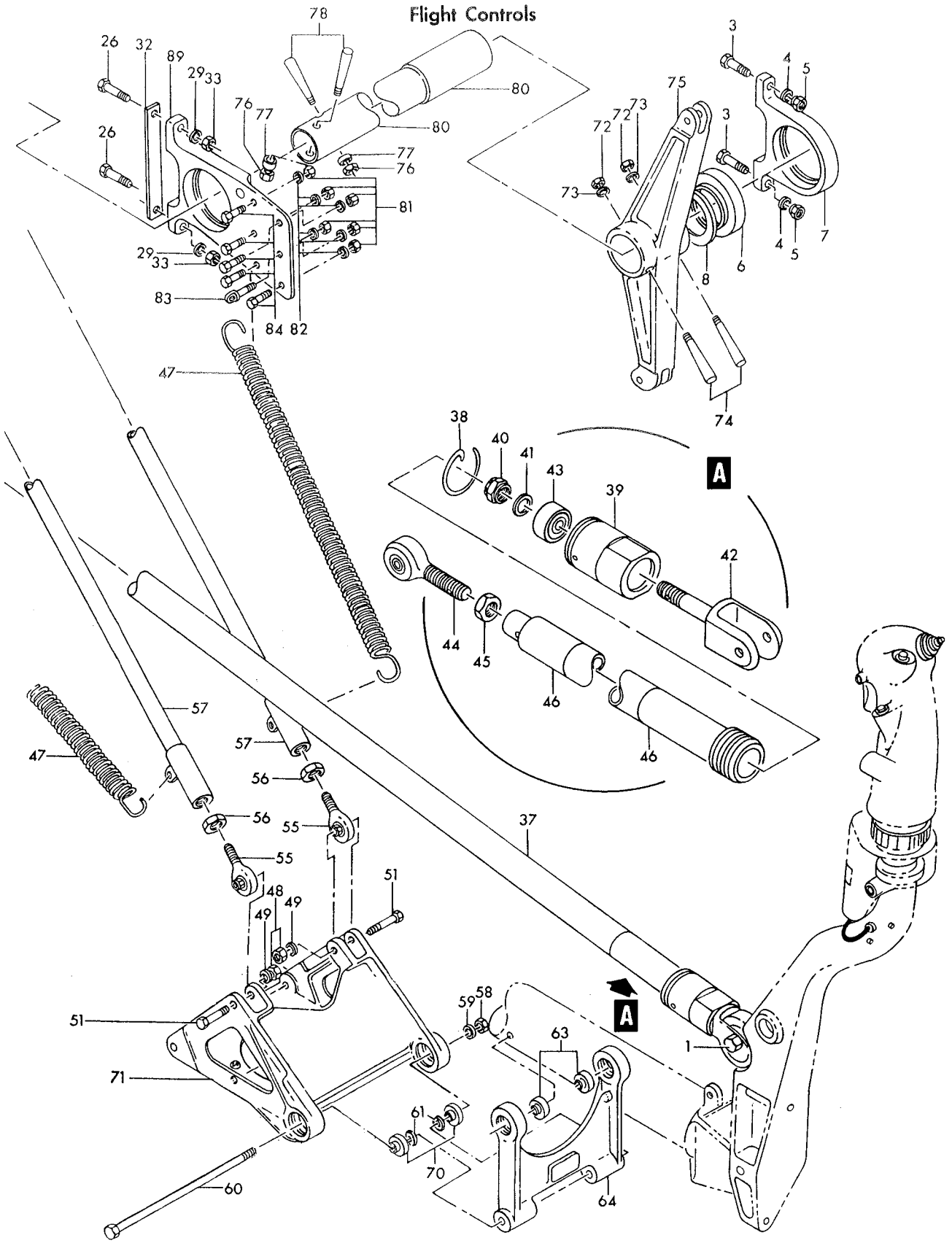

Figure 69— Control Stick Pushrods and Centering Mechanism (Sheet 2 of 2)

Figura e particolare	NDR	DENOMINAZIONE	Quant.	Codice applicab.
69	MS24665-134	COTTER PIN (96906)	1	
-65	AN320-4	NUT (88044)	1	
-66	AN960-416	WASHER (88044)	1	
-67	AN174-62	BOLT (88044)	1	
-68	726145-3	SHIM, washer	AR	
-69	760744	BELLCRANK ASSY, aileron torque tube actuating	1	
-70	AN201KP4A	. BEARING (88044)	2	
-71	760744-3	. BELLCRANK, aileron tube actuating	1	
-72	MS21042L3	NUT (96906)	4	
-73	AN975-3	WASHER (88044)	4	
-74	AN386-2-14A	PIN (88044)	4	
-75	760632-1	BELLCRANK, elevator outer torque tube *(see fig. 75)*	2	
-76	MS21042L3	NUT (96906)	4	
-77	AN975-3	WASHER (88044)	4	
-78	AN386-2-10A	PIN (88044)	4	
-79	760634L	TUBE, stabilizer torque	1	
-80	760634R	TUBE, stabilizer torque	1	
	761012-101	STAND ASSY, cockpit controls	1	6701-6740
	761012-107	STAND ASSY, cockpit controls	1	6741-
-81	MS21042L3	. NUT (96906)	12	
-82	AN960D10	. WASHER (88044)	12	
-83	AN42B-4	. EYE BOLT (88044)	2	
-84	NAS1103-4	. BOLT (80205)	10	
-85	760630L	. BRACKET ASSY, elevator torque tube inboard bearing	1	
-86	760630R	. BRACKET ASSY, elevator torque tube inboard bearing	1	
-87	KP21BS	. . BEARING, self-aligning ball (21335)	1	
-88	760630-3L	. . BRACKET ASSY, elevator torque tube inboard bearing	1	
-89	760630-3R	. . BRACKET ASSY, elevator torque tube inboard bearing	1	
-90	791573-1	. BELLCRANK, elevator torque tube center	1	
-91	MS21042L4	. NUT (96906)	8	
-92	AN960D416	. WASHER (88044)	8	
-93	NAS1104-4	. BOLT (80205)	8	
-94	783125-1	. SUPPORT, walking beam	1	
	761012-103	. PANEL AND SUPPORT ASSY, cockpit controls	1	6701-6740
	761012-109	. PANEL AND SUPPORT ASSY, cockpit controls	1	6741-
-95	760629	. . SUPPORT ASSY, aileron torque tube *(see fig. 68)*	1	
-96	AN201KP4A	. . . BEARING (88044)	4	
-97	760629-3	. . . SUPPORT, aileron torque tube	1	
	783129-9	BEAM INSTL, rudder and brake *(see fig. 64)*	1	
	784844-1	SUPPORT INSTL, radar indicator forward *(see fig. 221)*	1	
	794375-103	SOLENOID INSTL, aileron travel limiter *(see fig. 70)*	1	

Figura e particolare	NDR	DENOMINAZIONE 1 2 3 4 5 6 7	Quant.	Codice applicab.
		AILERON TRAVEL LIMITER		
70	794375-103	. SOLENOID INSTL, aileron travel limiter *(see fig. 69 for reqd)*	REF	
	MS24665-134	. . COTTER PIN (96906)	2	
-1	AN960D6	. . WASHER (88044)	2	
-2	MS20392-1C11	. . PIN (96906)	2	
-3	11512-32	. . SOLENOID, (L26) aileron travel limiter (07797) (Lockheed spec dwg 619342-3)	1	
		Attaching Parts		
-4	AN502-10-6	. . SCREW (88044)	4	
-5	AN960D10	. . WASHER (88044)	4	
-6	794364-1	. . LINK, aileron travel limiter	2	
	MS24665-134	. . COTTER PIN (96906)	2	
-7	AN960-10	. . WASHER (88044)	2	
-8	727056-1	. . SPRING, aileron travel limiter	1	
-9	MS21042L3	. . NUT (96906)	2	
-10	AN970-3	. . WASHER (88044)	2	
-11	727987-1	. . WASHER, aileron travel limiter stop	2	
-12	727988-1	. . WASHER, aileron travel limiter stop	2	
-13	777514-1	. . STOP, aileron travel limiter	2	
-17	MS21042L3	. . NUT (96906)	2	
-18	AN960-10L	. . WASHER (88044)	2	
-19	AN173H6A	. . BOLT (88044)	2	
-20	794575-1	. . HINGE, aileron travel limiter	1	
-21	794363-1	. . BRACKET ASSY, aileron limiter solenoid support	1	
	793898-1	. . BRACKET ASSY, aileron limiter hinge support	1	
		Attaching Parts		
-22	LP4-6A	. . BOLT (03038)	2	
-25	793898-3	. . . BRACKET, aileron limiter hinge support	1	
-26	AN200K3L	. . . BEARING (88044)	2	
-27	NAS509-4	. . NUT (80205)	1	
-28	AN565D428H10	. . SCREW (88044)	1	
-29	771905-1	. HOUSING ASSY, aileron torque tube forward bearing *(see fig. 68 for reqd)*	REF	
-30	761327	. STOP ASSY, aileron torque tube *(see fig. 68 for reqd)*	REF	

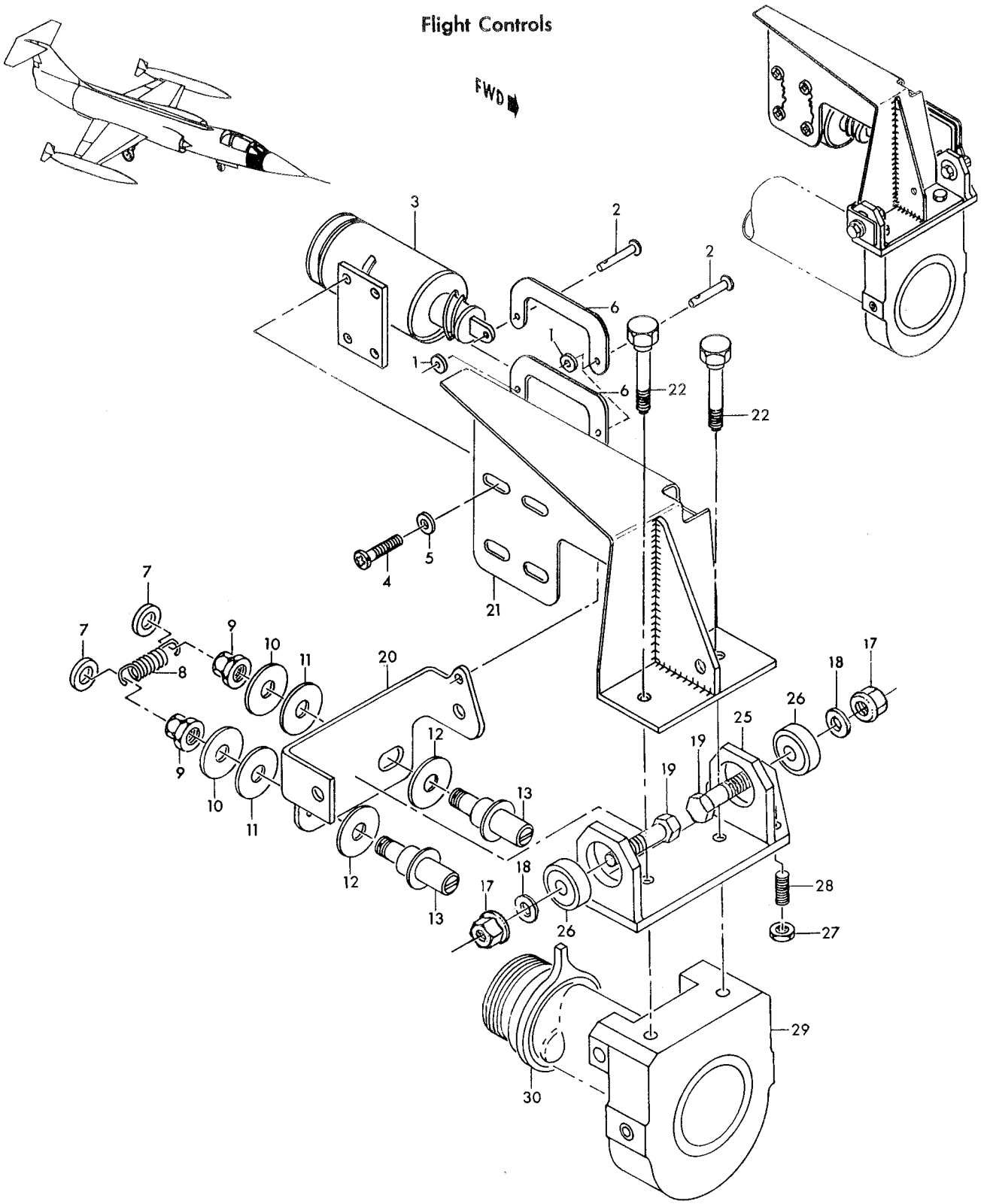

Figure 70—Aileron Travel Limiter

Figura e particolare	NDR	1 2 3 4 5 6 7 DENOMINAZIONE	Quant.	Codice applicab.
		PILOTS CONTROL STICK AND GRIP ASSEMBLY		
71	783459-107	. CONTROL STICK INSTL, cockpit aileron and stabilizer (NHA 849071-101) .	1	6701-6799
	783459-113	. CONTROL STICK INSTL, cockpit aileron and stabilizer (NHA 849071-101) .	1	6800-
	MS24665-134	. . COTTER PIN (96906)	2	
- 1	AN320-5	. . NUT (88044) *(see fig. 68)*	2	
- 2	AN960-516	. . WASHER (88044) *(see fig. 68)*	5	
- 3	306779	. . SHIM *(see fig. 68)*	AR	
- 4	AN175H14	. . BOLT (88044) *(see fig. 69)*	1	
- 5	AN175H31	. . BOLT (88044) *(see fig. 68)*	1	
- 6	783376-101	. . STICK AND GRIP ASSY, pilot's control	1	6701-6799
	783376-103	. . STICK AND GRIP ASSY, pilot's control	1	6800-
- 7	18565-3	. . . MOTOR, (B3) stick shaker (98571) (Lockheed spec dwg 620675-3) (see T.O. 8D1-100-2-3)	1	
- 8	CG93A2	. . . STICK ASSY, (A13) pilot's control (A0019) (94580) (Lockheed spec dwg 620674-101) (see T.O. 16C1-27-8-4)	1	
- 8A	EMRA42PM1A106	. . . . CONNECTOR, (P57) plug (P-1 disc) (81312)	1	
- 9	CG111A1	. . . GRIP ASSY, (S17) pilot s control (A0019) (94580) (Lockheed spec dwg 620729-1) (see T.O. 11W1-10-2-3)	1	
-10	797065-1	. . . SCREW, stick grip attachment	1	
	TSE-20-01	A. . . MODULE JUNCTION (11139)	2	
	1841-1-5620	A. . . CONTACT (11139)	4	
-11	AN316-5R	. . NUT (88044)	2	
-12	AN960D516	. . WASHER (88044)	2	
-13	NAS428-5-10	. . BOLT (80205)	1	
-14	NAS428-5-14	. . BOLT (80205)	1	
-15	782910-503	. PUSH ROD ASSY, stabilizer *(see fig. 69 for reqd)*	REF	
-16	760759-3	. YOKE, pilot's control stick *(see fig. 68 for reqd)*	REF	

A - Reqd per AA.1F-104-OT-802

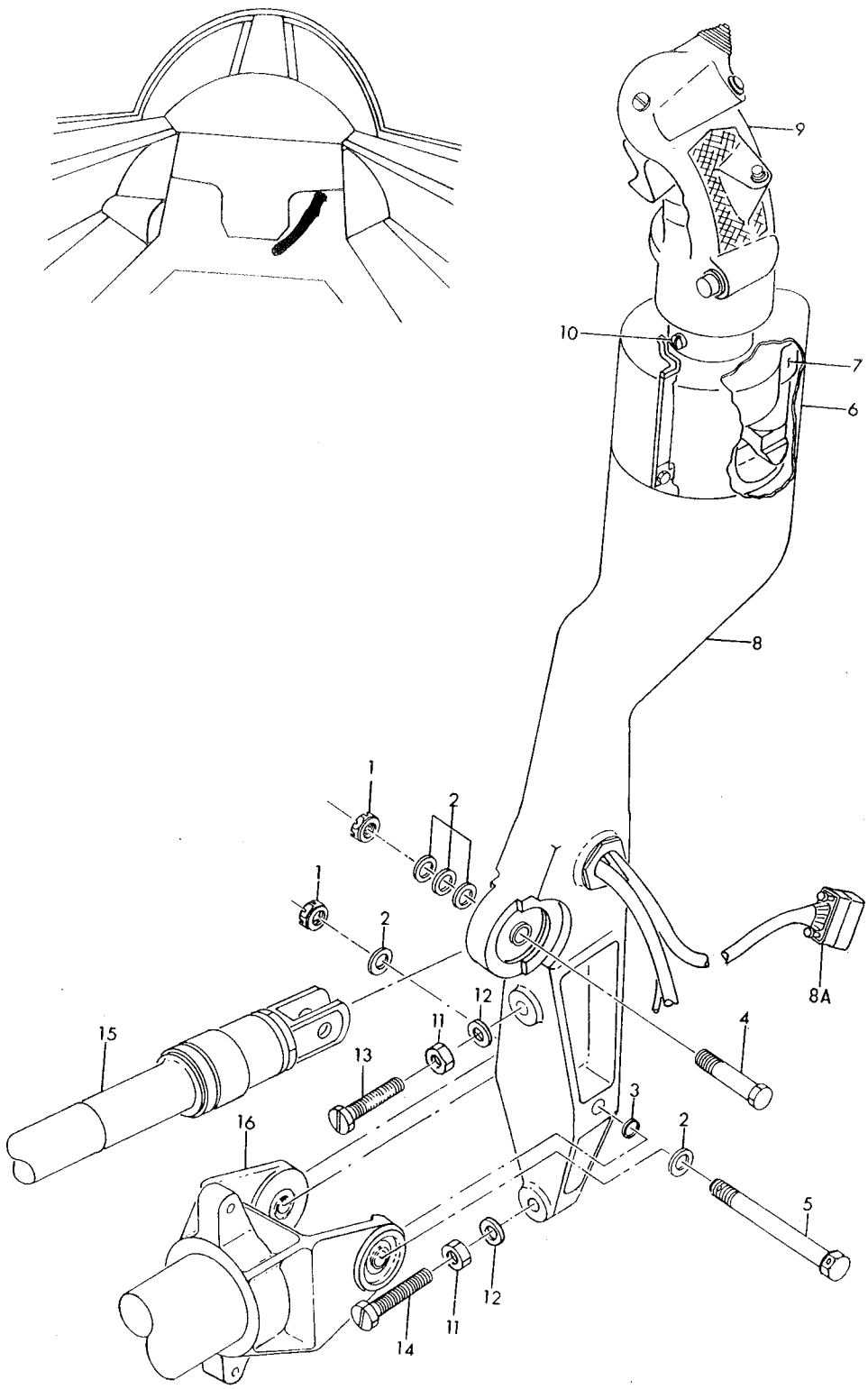

Figure 71— Pilots Control Stick and Grip Assembly

Figura e particolare	NDR	DENOMINAZIONE 1 2 3 4 5 6 7	Quant.	Codice applicab.
		AILERON CONTROLS FUSELAGE STATION 184 TO 505		
72- 1	761561-45	CABLE ASSY, fwd aileron control *(see fig. 68 for reqd)*	REF	
- 2	AN669S3RH	TERMINAL (88044)	2	
	760231	BRACKET INSTL, fus sta 184 LH aileron cable pulley *(see fig. 63 for reqd)*	REF	
	760232	BRACKET INSTL, fus sta 184 RH aileron cable pulley *(see fig. 63 for reqd)*	REF	
- 3	760231-5	BRACKET ASSY, fus sta 184 LH aileron cable pulley	1	
- 4	760232-5	BRACKET ASSY, fus sta 184 RH aileron cable pulley	1	
		Attaching Parts		
- 5	NAS1104-10	BOLT (80205)	2	
- 6	NAS1104-8	BOLT (80205)	1	
- 7	AN960D416	WASHER (88044)	3	
- 8	MS21042L4	NUT (96906)	3	
- 9	AN320-4	NUT (88044)	2	
-10	AN960D416	WASHER (88044)	2	
-11	NAS1104-17D	BOLT (80205)	1	
-12	NAS1104-32D	BOLT (80205) (only on 760232)	1	
	NAS1104-33D	BOLT (80205) (only on 760231)	1	
-13	MS20219-4	PULLEY (96906)	2	
-14	NAS427K15	PIN (80205)	1	
-15	NAS427K16	PIN (80205)	1	
-16	NAS427T12	PIN (80205)	1	
	MS24665-132	COTTER PIN (96906)	2	
-17	760229	BRACKET, fus sta 184 LH aileron cable pulley	1	
	760230	BRACKET, fus sta 184 RH aileron cable pulley	1	
-18	760475-3L	BRACKET ASSY, fus sta 209 flight control pulley *(see fig. 83 for reqd)*	REF	6701-6720
	760475-103	BRACKET ASSY, fus sta 209 flight control pulley LH *(see fig. 83 for reqd)*	REF	6721-
-19	760475-3R	BRACKET ASSY, fus sta 209 flight control pulley *(see fig. 83 for reqd)*	REF	6701-6720
	760475-104	BRACKET ASSY, fus sta 209 flight control pulley RH *(see fig. 83 for reqd)*	REF	6721-
	784220-109	CABLES INSTL, LH panel flight control *(see fig. 63 for reqd)*	REF	6701-6720
	784220-107	CABLES INSTL, LH panel flight control *(see fig. 63 for reqd)*	REF	6721-
	784220-111	CABLES INSTL, RH panel flight control *(see fig. 63 for reqd)*	REF	
-20	NAS649B16S	BARREL (80205)	2	
-21	AN320-3	NUT (88044)	2	
-22	AN960D10	WASHER (88044)	2	
-23	AN23-13	BOLT (88044)	2	
-24	761561-5	CABLE ASSY, inboard LH center aileron control	1	
-25	761561-7	CABLE ASSY, inboard RH center aileron control	1	
-26	761561-6	CABLE ASSY, outboard LH center aileron control	1	
-27	761561-8	CABLE ASSY, outboard RH center aileron control	1	
-28	4022	CABLE END (89660)	1	
-29	NAS650S3LH	TERMINAL (80205)	1	
	784220-105	CABLES INSTL, mid fus flight control *(see fig. 63 for reqd)*	REF	
-30	AN320-3	NUT (88044)	8	
-31	AN960D10	WASHER (88044)	8	
-33	AN23-13	BOLT (88044)	8	
-34	726966-1	TERMINAL ASSY, 3/32 cable turnbuckle bearing	2	
	AN200KP3	BEARING (88044)	1	
	726966-3	TERMINAL, 3/32 cable turnbuckle bearing	1	
-35	MS21253-3LL	FORK (96906)	2	
-36	NAS649B16L	BARREL (80205)	4	
-37	761561-10	CABLE ASSY, outboard aft aileron control	2	
	761561-43	LOCKCLAD ASSY, outboard aft aileron control	1	
-38	4022	CABLE END (89660)	1	
-39	NAS650L3RH	TERMINAL (80205)	1	
-40	765361-1	CABLE ASSY, inboard aft aileron control	2	
	765361-3	LOCKCLAD ASSY, inboard aft aileron control	1	
-41	726967-1	TERMINAL, 3/32 cable bearing fork end	1	
-42	AN669L3LH	TERMINAL (88044)	1	
-43	760355-3L	BRACKET ASSY, fus sta 249 flight control pulley *(see fig. 83 for reqd)*	REF	6701-6765

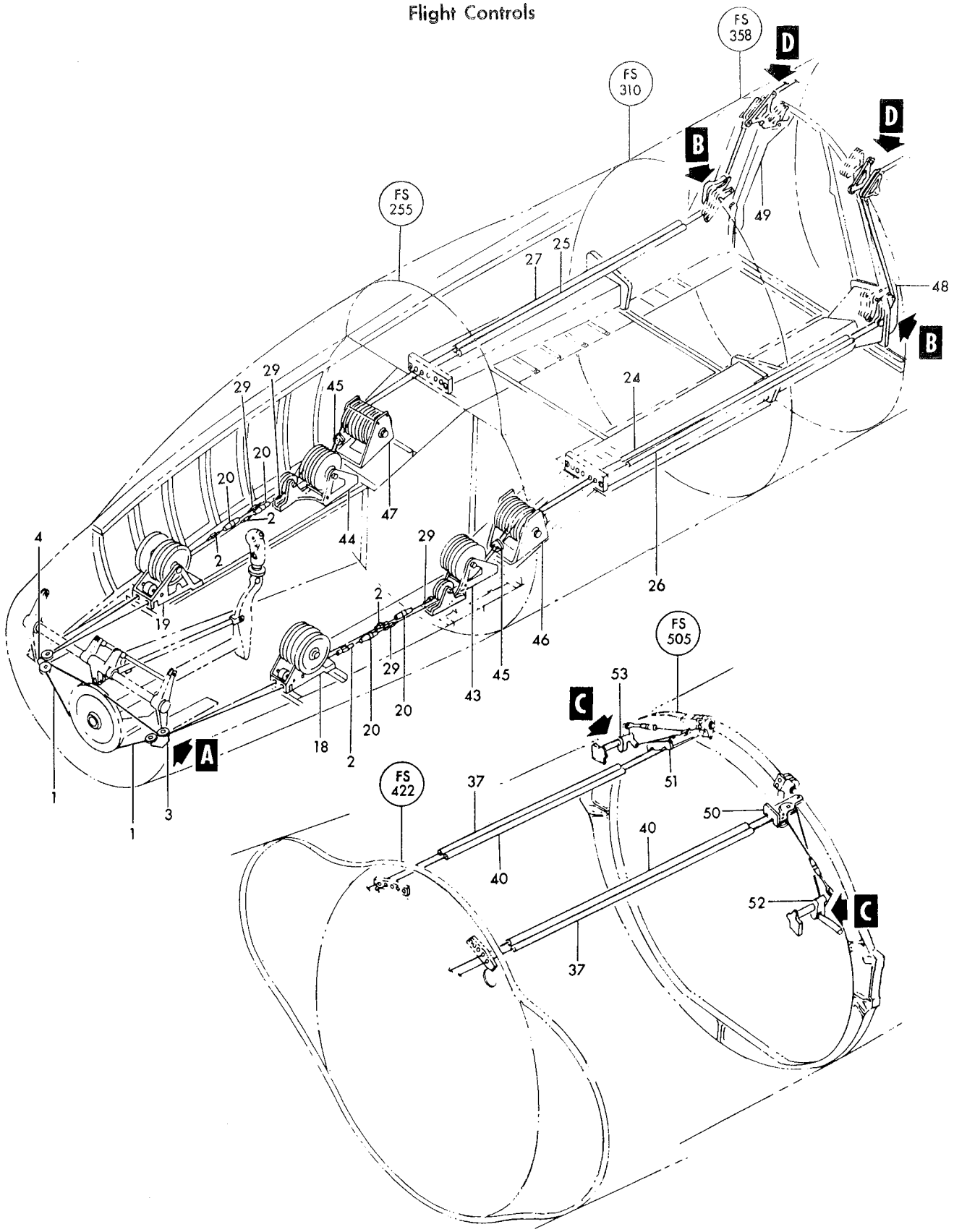

Figure 72— Aileron Controls Fuselage Station 184 to 505 (Sheet 1 of 2)

Flight Controls

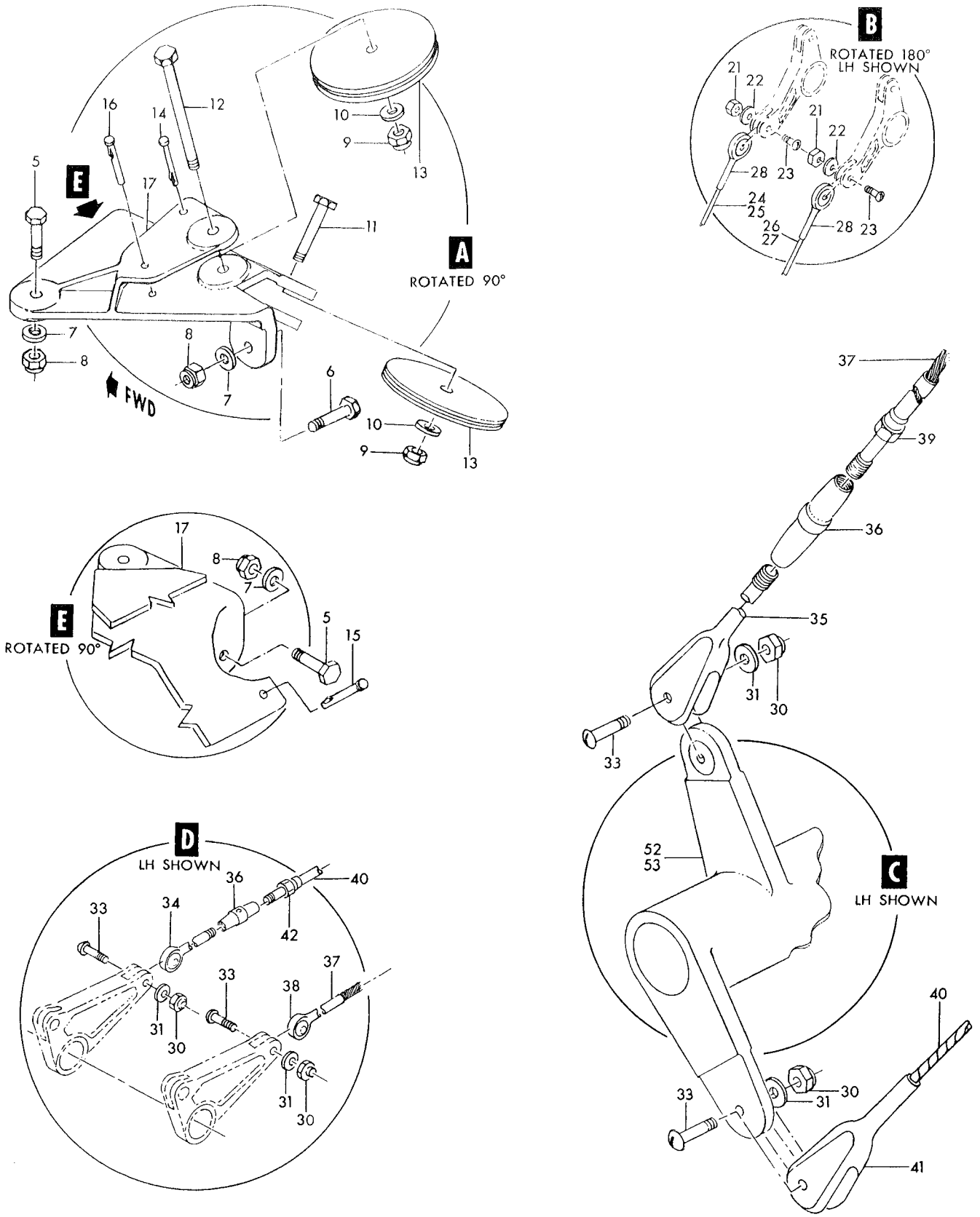

Figure 72— Aileron Controls Fuselage Station 184 to 505 (Sheet 2 of 2)

Figura e particolare	NDR	DENOMINAZIONE 1 2 3 4 5 6 7	Quant.	Codice applicab.
72	760355-103	BRACKET ASSY, fus sta 249 flight control pulley LH *(see fig. 83 for reqd)*	REF	6766-
-44	760355-3R	BRACKET ASSY, fus sta 249 flight control pulley *(see fig. 83 for reqd)*	REF	6701-6765
	760355-104	BRACKET ASSY, fus sta 249 flight control pulley RH *(see fig. 83 for reqd)*	REF	6766-
	761968L	GUIDE INSTL, fus sta 255 cable *(see fig. 63 for reqd)*	REF	
	761968R	GUIDE INSTL, fus sta 255 cable *(see fig. 63 for reqd)*	REF	
-45	761964	GUIDE, fus sta 255 aileron cable	2	
		Attaching Parts		
	AN515-8R14	SCREW (88044)	1	
	AN960D8	WASHER (88044)	1	
	MS21042L08	NUT (96906)	1	
-46	760508-5L	BRACKET ASSY, fus sta 258 flight control pulley *(see fig. 83 for reqd)*	REF	
-47	760508-5R	BRACKET ASSY, fus sta 258 flight control pulley *(see fig. 83 for reqd)*	REF	
-48	771540-101	TUNNEL ASSY, LH fus sta 335 flight control bellcrank *(see fig. 84 for reqd)*	REF	
-49	771551-103	TUNNEL ASSY, RH fus sta 335 flight control bellcrank *(see fig. 84 for reqd)*	REF	
-50	761042-7	BRACKET ASSY, fus sta 505 flight control pulley LH *(see fig. 77 for reqd)*	REF	6701-6765
	761042-107	BRACKET ASSY, fus sta 505 flight control pulley LH *(see fig. 77 for reqd)*	REF	6766-
-51	761042-8	BRACKET ASSY, fus sta 505 flight control pulley RH *(see fig. 77 for reqd)*	REF	6701-6765
	761042-108	BRACKET ASSY, fus sta 505 flight control pulley RH *(see fig. 77 for reqd)*	REF	6766-
-52	761068L	BELLCRANK ASSY, fus sta 505 aileron LH *(see fig. 73 for reqd)*	REF	
-53	784484-1	BELLCRANK ASSY, fus sta 505 aileron RH *(see fig. 73 for reqd)*	REF	

Figura e particolare	NDR	DENOMINAZIONE 1 2 3 4 5 6 7	Quant.	Codice applicab.
		AILERON SERVO ACTUATING MECHANISM		
73	793291-1	. ACTUATOR INSTL, fus sta 489 aileron trim stop *(see fig. 63 for reqd)* . .	REF	
- 1	MS21042L4	. . NUT (96906)	2	
- 2	AN960D416	. . WASHER (88044)	2	
- 3	NAS1104-14	. . BOLT (80205)	1	
- 4	NAS1104-9	. . BOLT (80205)	1	
- 5	785T100	. . JACKSCREW, aileron trim stop (A2898) (98889) (Lockheed spec dwg 669491-1) (see T.O. 16G3-2-61-3)	1	
- 6	793297-1	. . BRACKET, fus sta 498 actuator support	1	
		Attaching Parts		
- 7	NAS623-3-8	. . SCREW (80205)	4	
- 8	AN960D10	. . WASHER (88044)	4	
- 9	MS21042L3	. . NUT (96906)	4	
-10	793694-1	. . SHIM, actuator support bracket	AR	
	793292-1	. TORQUE TUBE INSTL, fus sta 505 LH side aileron *(see fig. 63 for reqd)*	REF	6701-6765
	793292-101	. TORQUE TUBE INSTL, fus sta 505 LH side aileron *(see fig. 63 for reqd)*	REF	6766-
-11	AN4-13A	. . BOLT (88044)	1	
-12	AN4-13A	. . BOLT (88044)	1	
-14	AN960D416	. . WASHER (88044)	2	
	784146-1	. . BRACKET ASSY, LH side aileron torque tube	1	
		Attaching Parts		
-15	NAS623-3-11	. . SCREW (80205)	4	
-16	AN960D10	. . WASHER (88044)	4	
-17	MS21042L3	. . NUT (96906)	4	
-18	2752-048	. . . NUT, self-locking, barrel (72962)	2	
-19	LS4893-4	. . . RETAINER, barrel nut (36659)	2	
-20	784146-5	. . . CAP, LH side aileron torque tube (match comp do not stk sep)	1	
-21	784146-3	. . . BRACKET, LH side aileron torque tube (match comp do not stk sep)	1	
-22	MS21042L6	. . NUT (96906)	1	
-23	AN960D616	. . WASHER (88044)	1	
-24	761104	. . STUD, fus sta 505 aileron torque tube	1	
-25	761235L	. . BRACKET, aileron rigging pin	1	
		Attaching Parts		
-26	NAS623-3-8	. . SCREW (80205)	4	
-26A	770397-1	. . SHIM, fus sta 505 aileron torque tube bracket	AR	6766-
-27	AN960D10	. . WASHER (88044)	4	
-28	MS21042L3	. . NUT (96906)	4	
-29	793293-1	. . TORQUE TUBE ASSY, fus sta 505 LH side aileron	1	
-30	AN200KS5	. . . BEARING (88044)	1	
-31	MS21042L3	. . . NUT (96906)	2	
-32	AN960D10	. . . WASHER (88044)	2	
-33	NAS623-3-32	. . . SCREW (80205)	2	
-34	761068L	. . . BELLCRANK ASSY, fus sta 505 aileron *(see fig. 72)*	1	
-35	AN200KP3	. . . . BEARING (88044)	2	
-36	761068-3L	. . . . BELLCRANK, fus sta 505 aileron	1	
-37	MS16624-1131	. . . RING (96906)	1	
-38	KP21BS	. . . BEARING, self-aligning ball (21335)	1	
-39	MS16624-1181	. . . RING (96906)	1	
-40	NAS428-4-10	. . . BOLT (80205)	2	
	793296-1	. . . LEVER ASSY, aileron trim actuated stop	1	
-41	KNL428	. . . . INSERT, keensert (98004)	1	
-42	KS4A	. . . . BEARING, ball (21335)	1	
-43	B544DD	. . . . BEARING, shielded torque tube (21335)	2	
-44	793296-3	. . . . LEVER, aileron trim actuated stop	1	
-45	793298-1	. . . STOP ASSY, aileron trim actuated	1	
-46	793294-1	. . . TORQUE TUBE, fus sta 505 LH side aileron	1	
-47	AN174-14	. BOLT (88044) (NHA 849229-101) (NHA 849229-102) (NHA FL3000-101) (NHA FL3000-102)	1	

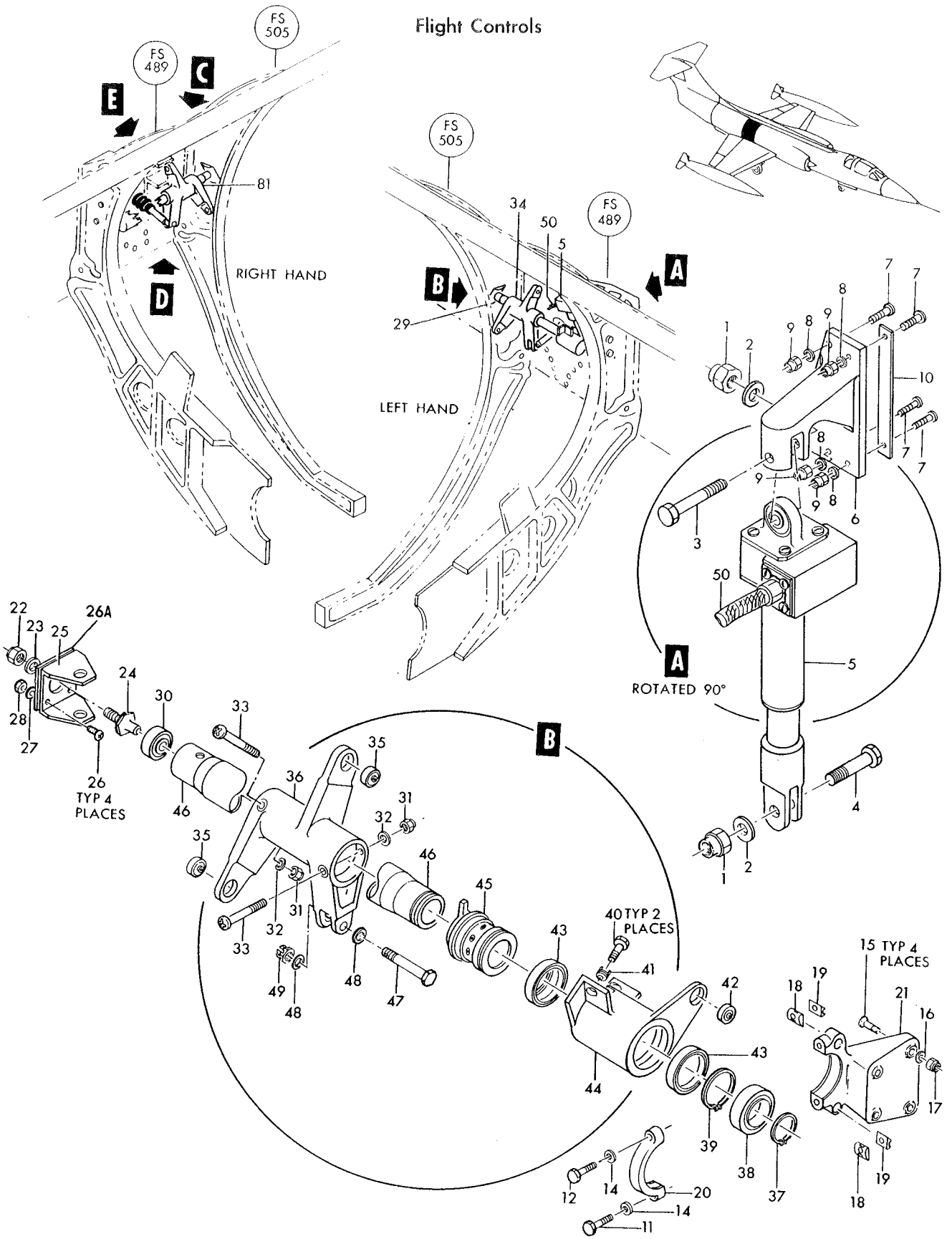

Figure 73— Aileron Servo Actuating Mechanism (Sheet 1 of 2)

Flight Controls

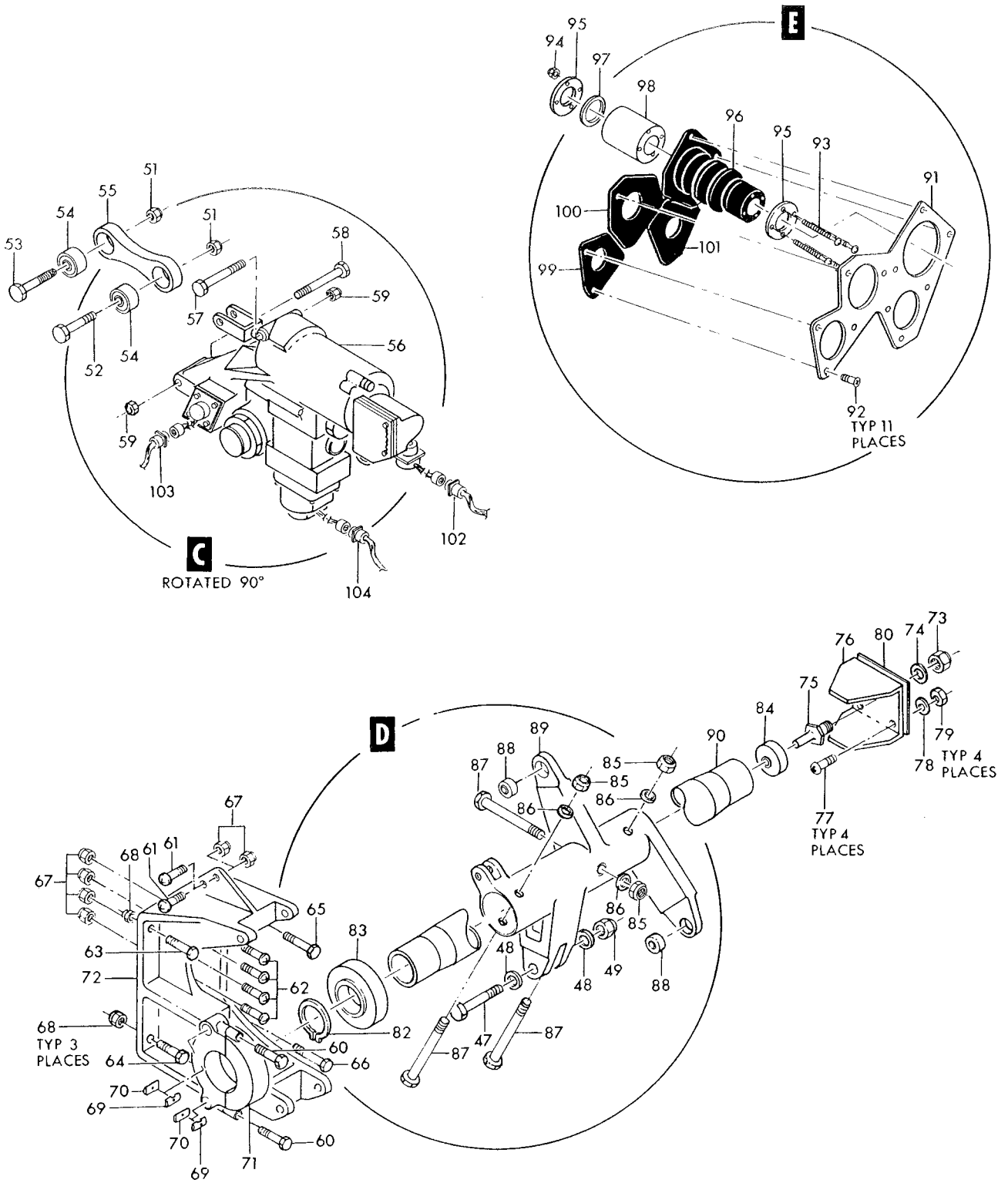

Figure 73— Aileron Servo Actuating Mechanism (Sheet 2 of 2)

Figura e particolare	NDR	1 2 3 4 5 6 7 DENOMINAZIONE	Quant.	Codice applicab.
73-48	AN960D416	WASHER (88044) (NHA 849229-101) (NHA 849229-102) (NHA FL3000-101) (NHA FL3000-102)	2	
-49	AN310-4	NUT (88044) (NHA 849229-101) (NHA 849229-102) (NHA FL3000-101) (NHA FL3000-102)	1	
	MS24665-134	COTTER PIN (96906) (NHA 849229-101) (NHA 849229-102) (NHA FL3000-101) (NHA FL3000-102)	1	
-50	LA2908-31-5	SHAFT, flexible drive (57711) (Lockheed spec dwg 669492-1) *(see fig. 74 for reqd)*	REF	
	784003-1	ACTUATOR INSTL, aileron autopilot RH *(see fig. 63 for reqd)*	REF	
-51	MS21042L4	. NUT (96906)	2	
-52	NAS1104-14	. BOLT (80205)	1	
-53	NAS1104-16	. BOLT (80205)	1	
	784486-1	. LINK ASSY, aileron autopilot torque tube	1	
-54	GDSRP4	. . BEARING (21335)	2	
-55	784486-3	. . LINK, aileron autopilot torque tube	1	
-56	782072-5	. ACTUATOR ASSY, (B23) autopilot aileron (see T.O. 9H2-5-171-4) *(see fig. 123)*	1	
		Attaching Parts		
-57	NAS1104-34	. BOLT (80205)	1	
-58	NAS1104-29	. BOLT (80205)	1	
-59	MS21042L4	. NUT (96906)	2	
		*		
	784482-1	TORQUE TUBE INSTL, RH aileron *(see fig. 63 for reqd)*	REF	
-60	NAS1104-15	. BOLT (80205)	2	
	784483-1	. BRACKET ASSY, aileron torque tube and autopilot support	1	
		Attaching Parts		
-61	NAS623-3-4	. SCREW (80205)	2	
-62	NAS623-3-8	. SCREW (80205)	4	
-63	NAS1104-9	. BOLT (80205)	1	
-64	NAS1104-8	. BOLT (80205)	1	
-65	NAS1104-8	. BOLT (80205)	1	
-66	NAS1104-7	. BOLT (80205)	1	
-67	MS21042L3	. NUT (96906)	6	
-68	MS21042L4	. NUT (96906)	4	
-69	2752-048	. NUT, self-locking, barrel (72962)	2	
		*		
-70	LS4893-4	. . RETAINER, barrel nut (36659)	2	
-71	784483-5	. . CAP, aileron torque tube and autopilot support (match comp do not stk sep)	1	
-72	784483-3	. . BRACKET, aileron torque tube and autopilot support (match comp do not stk sep)	1	
-73	MS21042L6	. NUT (96906)	1	
-74	AN960D616	. WASHER (88044)	1	
-75	761104	. STUD, fus sta 505 aileron torque tube	1	
-76	761235R	. BRACKET, aileron rigging pin	1	
		Attaching Parts		
-77	NAS623-3-8	. SCREW (80205)	4	
-78	AN960D10	. WASHER (88044)	4	
-79	MS21042L3	. NUT (96906)	4	
		*		
-80	770397-1	. SHIM, fus sta 505 aileron torque tube	AR	
-81	784489-1	. TORQUE TUBE ASSY, RH aileron	1	
-82	MS16624-1131	. . RING (96906)	1	
-83	KP21BS	. . BEARING, self-aligning ball (21335)	1	
-84	AN200KS5	. . BEARING (88044)	1	
-85	MS21042L3	. . NUT (96906)	3	
-86	AN960D10	. . WASHER (88044)	3	
-87	NAS623-3-32	. . SCREW (80205)	3	
	784484-1	. . BELLCRANK ASSY, fus sta 505 RH aileron *(see fig. 72)*	1	
-88	AN200KP3	. . . BEARING (88044)	2	
-89	784484-3	. . . BELLCRANK, fus sta 505 RH aileron	1	
-90	784485-1	. . TORQUE TUBE, fus sta 505 aileron	1	
	763437-501	SEAL INSTL, fus sta 497 fume LH (NHA 849140-101)	1	
	763437-502	SEAL INSTL, fus sta 497 fume RH (NHA 849140-101)	1	

Figura e particolare	NDR	1	2	3	4	5	6	7	DENOMINAZIONE	Quant.	Codice applicab.
73-91	775893-1								PLATE, fus sta 497 LH fume seal retaining	1	
	775551-1								PLATE, fus sta 497 RH fume seal retaining	1	
									Attaching Parts		
-92	NAS221-9								SCREW (80205)	11	
									———————*———————		
	763434L								SEAL ASSY, fus sta 497 aileron push rod fume	1	
	763434R								SEAL ASSY, fus sta 497 aileron push rod fume	1	
-93	AN515-6R30								SCREW (88044)	4	
-94	MS21042L06								NUT (96906)	4	
-95	763515								RING, fus sta 497 push rod seal retaining	2	
-96	763434-3L								BOOT	1	
	763434-3R								BOOT	1	
-97	LS4565-19								RING, teflon backup packing (36659)	1	
-98	763516								SEAL, fus sta 497 aileron push rod	1	
-99	780310-1								SEAL, fus sta 497 fume LH	1	
	780313-1								SEAL, fus sta 497 fume RH	1	
-100	780311-1								SEAL, fus sta 497 fume LH	1	
	780314-1								SEAL, fus sta 497 fume RH	1	
-101	780312-1								SEAL, fus sta 497 fume LH	1	
	780315-1								SEAL, fus sta 497 fume RH	1	
	849589-101								HARNESS ASSY, automatic pitch control junction box to RH fillet *(see fig. 194 for reqd)*	REF	
-102	MS3112E10-6SW								CONNECTOR, (J48) recp (roll parallel servo) (96906)	1	
-103	MS3112E10-6S								CONNECTOR, (J47) recp (roll parallel servo) (96906)	1	
-104	PT02E8-2SW								CONNECTOR, (J52) recp (roll parallel servo) (77820)	1	

Figura e particolare	NDR	DENOMINAZIONE 1 2 3 4 5 6 7	Quant.	Codice applicab.
		AILERON TRIM ACTUATING MECHANISM		
74	791048-101	. SHAFT INSTL, aileron trim LH (NHA 849229-101)	1	
-5	MS16624-1098	. . RING (96906)	1	
-6	728439-1	. . FIRESEAL, aileron flexible shaft	1	
-7	728439-2	. . FIRESEAL, aileron flexible shaft	1	
-8	MS21042L3	. . NUT (96906)	1	
-9	AN520-10R8	. . SCREW (88044)	1	
-10	MS21919H4	. . CLAMP (96906)	1	
-10A	MS21919H4	. . CLAMP (96906)	1	6741-
-10B	AN520-10R6	. . SCREW (88044)	1	6741-
-10C	MS21042L3	. . NUT (96906)	1	6741-
-11	766843-3	. . FIRESEAL, aileron flexible shaft	1	
-12	766843-4	. . FIRESEAL, aileron flexible shaft	1	
-13	AN500A3-4	. . SCREW (88044)	2	
-14	51597-23	. . SHAFT ASSY, flexible drive (96212) (Lockheed spec dwg 669313-23) (see T.O. 8D1-8-116-4)	1	
		Partial Breakdown Follows		
	51595	. . . NUT ASSY, split (96212)	1	
-15	AN936A6	. . . . LOCKWASHER (88044)	2	
-16	51594	. . . . NUT, blank (96212)	2	
-16A	2-13T	. . WASHER, teflon (07128)	2	
	793559-3	. SHAFT INSTL, aileron trim stop (NHA 849140-101)	1	
-17	TA4C69S4T	. . CLAMP (84971)	2	
	TA4C69S8T	. . CLAMP (84971)	1	
	TA4C69S16T	. . CLAMP (84971)	1	
		Attaching Parts		
	AN520-10R12	. . SCREW (88044)	2	
	LS607-8	. . SPACER, phenolic (36659)	2	
	MS21042L3	. . NUT (96906)	2	
-18	TA4C69S4T	. . CLAMP (84971)	1	
	TA4C69S10T	. . CLAMP (84971)	1	
		Attaching Parts		
	AN520-10R10	. . SCREW (88044)	1	
	LS607-4	. . SPACER, phenolic (36659)	1	
	MS21042L3	. . NUT (96906)	1	
-19	MS16624-1098	. . RING (96906)	1	
-20	728439-1	. . FIRESEAL, aileron flexible shaft	1	
-21	728439-2	. . FIRESEAL, aileron flexible shaft	1	
-22	LA2908-31-5	. . SHAFT, flexible drive (57711) (Lockheed spec dwg 669492-11) *(see fig.73)*	1	
	793559-1	. TEE DRIVE INSTL, aileron trim stop *(see fig. 63 for reqd)*	REF	
-23	784T100	. . GEAR ASSY, tee drive (A2898) (98889) (Lockheed spec dwg 669490-1) (see T.O. 16G1-104-3)	1	
		Attaching Parts		
-24	NAS623-3-5	. . SCREW (80205)	2	
-25	NAS623-3-24	. . SCREW (80205)	1	
-26	793575-1	. . BRACKET ASSY, tee drive support	1	
		Attaching Parts		
	NAS623-3-2	. . SCREW (80205)	4	
	762233-505	. MOTOR INSTL, aileron trim *(see fig. 63 for reqd)*	REF	
-27	51500-11	. . ACTUATOR, (B49) electro-mechanical rotary (96212) (Lockheed spec dwg 669286-11) (see T.O. 8D1-8-116-4)	1	
		Attaching Parts		
	NAS221-39	. . SCREW (80205)	4	
	791048-3	. SHAFT INSTL, aileron trim RH (NHA 849071-101)	1	
-28	MS21919H4	. . CLAMP (96906)	8	

Flight Controls

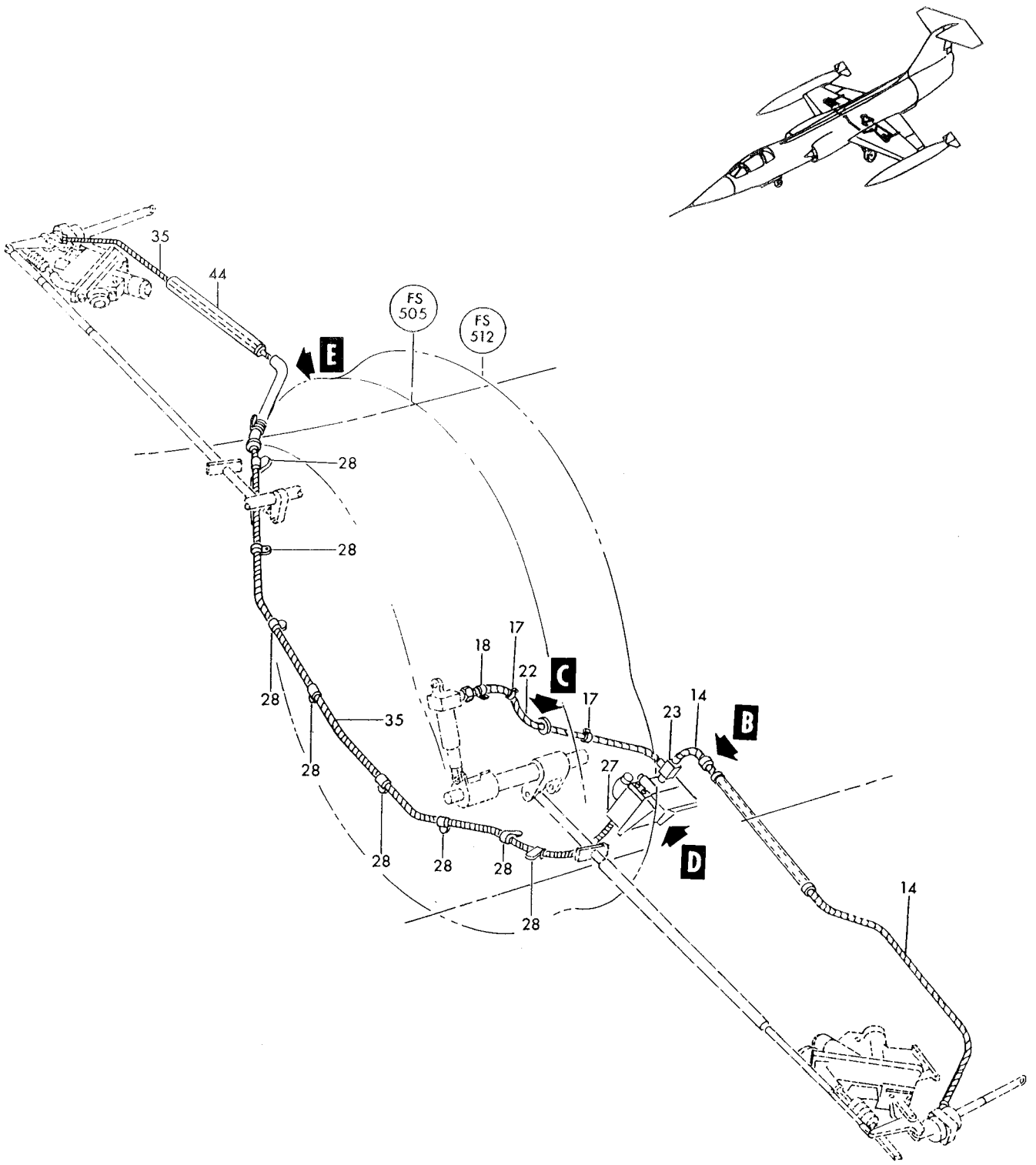

Figure 74— Aileron Trim Actuating Mechanism (Sheet 1 of 2)

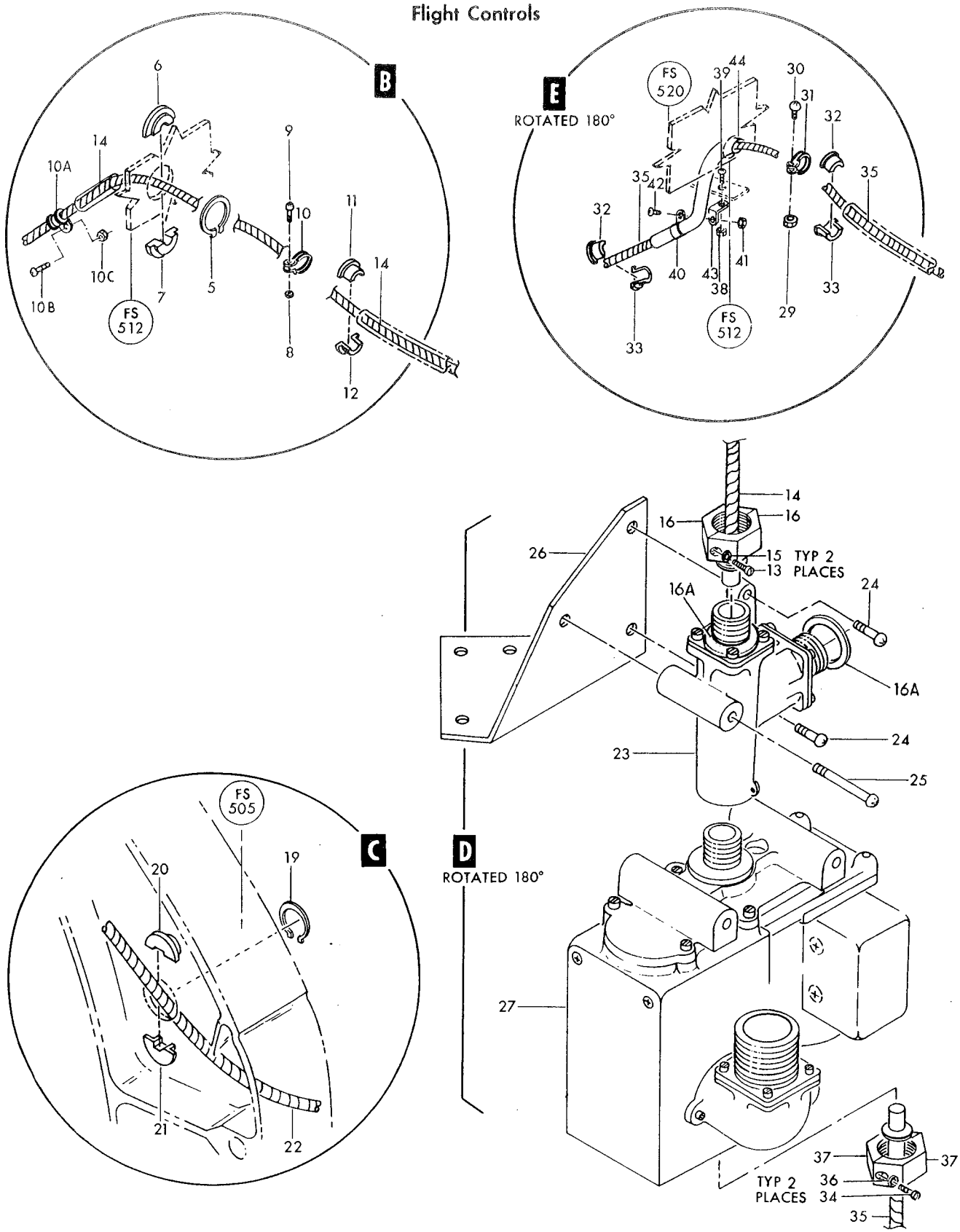

Figure 74— Aileron Trim Actuating Mechanism (Sheet 2 of 2)

Figura e particolare	NDR	DENOMINAZIONE	Quant.	Codice applicab.
74	MS21919H6	CLAMP (96906)	2	
	MS21919H8	CLAMP (96906)	1	
	MS21919H16	CLAMP (96906)	5	
		Attaching Parts		
	AN520-10R6	SCREW (88044)	1	
-29	MS21042L3	NUT (96906)	1	
-30	AN520-10R8	SCREW (88044)	1	
-31	MS21919H4	CLAMP (96906)	1	
-32	766843-3	FIRESEAL, aileron flexible shaft	2	
-33	766843-4	FIRESEAL, aileron flexible shaft	2	
-34	AN500A3-4	SCREW (88044)	2	
-35	51597-17	SHAFT ASSY, flexible drive (96212) (Lockheed spec dwg 669313-17) (see T.O. 8D1-8-116-4)	1	
		Partial Breakdown Follows		
	51595	NUT ASSY, split (96212)	1	
-36	AN936A3	LOCKWASHER (88044)	2	
-37	51594	NUT, blank (96212)	2	
	791048-5	CONDUIT INSTL, aileron trim *(see fig. 63 for reqd)*	REF	
-38	MS21042L3	NUT (96906)	1	
-39	AN520-10R8	SCREW (88044)	1	
-40	MS21919H12	CLAMP (96906)	1	
-41	MS21042L3	NUT (96906)	1	
-42	AN520-10R6	SCREW (88044)	1	
-43	AN743B12	BRACKET (88044)	1	
-44	791047-1	CONDUIT ASSY, aileron trim shaft	1	
		Attaching Parts		
	AN520-10R8	SCREW (88044)	3	

Figura e particolare	NDR	DENOMINAZIONE 1 2 3 4 5 6 7	Quant.	Codice applicab.
		STABILIZER CONTROLS		
75- 1	760632-1	BELLCRANK, outer elevator torque tube *(see fig. 69 for reqd)*	REF	
	784220-109	CABLE INSTL, LH panel flight control *(see fig. 63 for reqd)*	REF	6701-6720
	784220-107	CABLE INSTL, LH panel flight control *(see fig. 63 for reqd)*	REF	6721-
	784220-111	CABLE INSTL, RH panel flight control *(see fig. 63 for reqd)*	REF	
	MS24665-132	COTTER PIN (96906)	2	
- 2	AN320-101	NUT (88044)	2	
- 3	AN960D10	WASHER (88044)	2	
- 4	AN23-17	BOLT (88044)	2	
- 5	NAS649B32S	BARREL (80205)	2	
- 6	761878-101	CABLE ASSY, forward inboard stabilizer control	1	
- 7	761878-51	CABLE ASSY, forward outboard stabilizer control	1	
- 8	LCB125	CABLE END (83548)	1	
- 9	AN669S4RH	TERMINAL (88044)	1	
	761878-53	CABLE, forward inboard stabilizer control	1	
	MS24665-132	COTTER PIN (96906)	2	
-10	AN320-3	NUT (88044)	2	
-11	AN960D10	WASHER (88044)	2	
-12	AN23-13	BOLT (88044)	2	
-13	761878-7	CABLE ASSY, center inboard stabilizer control	1	
-14	761878-8	CABLE ASSY, center outboard stabilizer control	1	
-15	NAS650S4LH	TERMINAL (80205)	1	
-16	LCB125	CABLE END (83548)	1	
-17	760475-3L	BRACKET ASSY, fus sta 209 flight control pulley *(see fig. 83 for reqd)*	REF	6701-6720
	760475-103	BRACKET ASSY, fus sta 209 flight control pulley LH *(see fig. 83 for reqd)*	REF	6721-
-18	760475-3R	BRACKET ASSY, fus sta 209 flight control pulley *(see fig. 83 for reqd)*	REF	6701-6720
	760475-104	BRACKET ASSY, fus sta 209 flight control pulley RH *(see fig. 83 for reqd)*	REF	6721-
-19	760355-3L	BRACKET ASSY, fus sta 249 flight control pulley *(see fig. 83 for reqd)*	REF	6701-6765
	760355-103	BRACKET ASSY, fus sta 249 flight control pulley LH *(see fig. 83 for reqd)*	REF	6766-
-20	760355-3R	BRACKET ASSY, fus sta 249 flight control pulley *(see fig. 83 for reqd)*	REF	6701-6765
	760355-104	BRACKET ASSY, fus sta 249 flight control pulley RH *(see fig. 83 for reqd)*	REF	6766-
	761968L	GUIDE INSTL, fus sta 255 cable *(see fig. 63 for reqd)*	REF	
	761968R	GUIDE INSTL, fus sta 255 cable *(see fig. 63 for reqd)*	REF	
-21	761965	GUIDE, fus sta 255 stabilizer cable	2	
		Attaching Parts		
-22	AN515-8R14	SCREW (88044)	2	
-23	AN960D8	WASHER (88044)	2	
-24	MS21042L08	NUT (96906)	2	
-25	760508-5L	BRACKET ASSY, fus sta 258 flight control pulley *(see fig. 83 for reqd)*	REF	
-26	760508-5R	BRACKET ASSY, fus sta 258 flight control pulley *(see fig. 83 for reqd)*	REF	
-27	771540-101	TUNNEL ASSY, LH fus sta 335 flight control bellcrank *(see fig. 84 for reqd)*	REF	
-28	771551-103	TUNNEL ASSY, RH fus sta 335 flight control bellcrank *(see fig. 84 for reqd)*	REF	
	784220-105	CABLE INSTL, mid fus flight control *(see fig. 63 for reqd)*	REF	
	MS24665-132	COTTER PIN (96906)	2	
-29	AN320-3	NUT (88044)	2	
-30	AN960D10	WASHER (88044)	2	
-31	AN23-13	BOLT (88044)	2	
-32	761878-47	CABLE ASSY, aft inboard stabilizer control	2	
-33	761878-49	CABLE ASSY, aft outboard stabilizer control	2	
-34	LCB125	CABLE END (83548)	1	
-35	AN669L4RH	TERMINAL (88044)	1	
-36	LS1001	CLIP, fairlead bushing retainer (36659)	4	
-37	764894-103	SEAL, fus sta 505 cable split	8	
-37A	852005-101	CLAMPING, fus sta 505 cable seal	4	
	MS24665-516	COTTER PIN (96906)	4	
-38	AN320-4	NUT (88044)	4	
-39	AN960-416L	WASHER (88044)	4	
-40	AN24-17	BOLT (88044)	4	
-41	MS21253-4LL	CLEVIS END (96906)	4	
-42	NAS649B32L	BARREL (80205)	4	
-43	761042-9	BRACKET ASSY, fus sta 505 flight control pulley *(see fig. 77 for reqd)*	REF	
-44	761042-11	BRACKET ASSY, fus sta 505 flight control pulley *(see fig. 77 for reqd)*	REF	

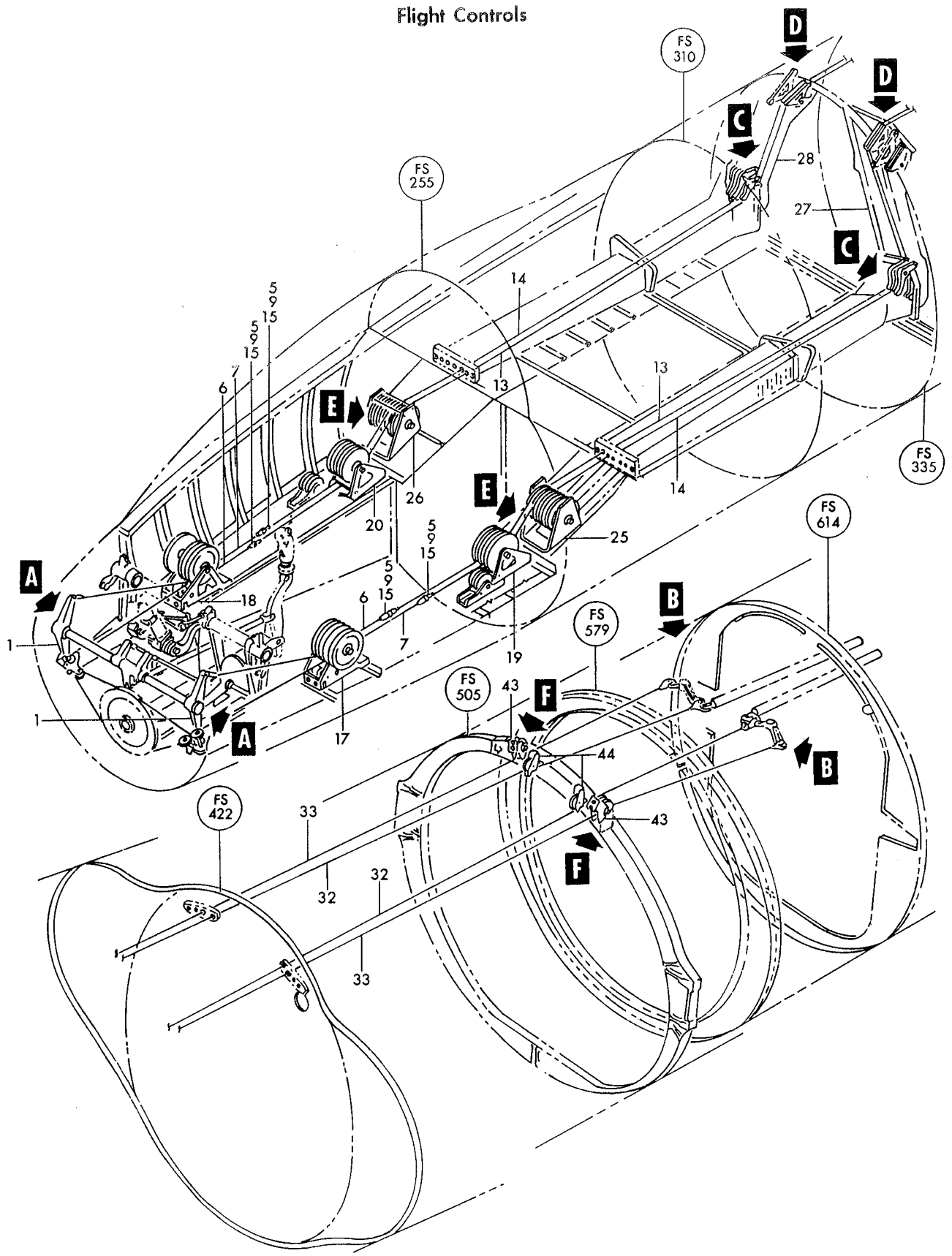

Figure 75— Stabilizer Controls (Sheet 1 of 2)

Flight Controls

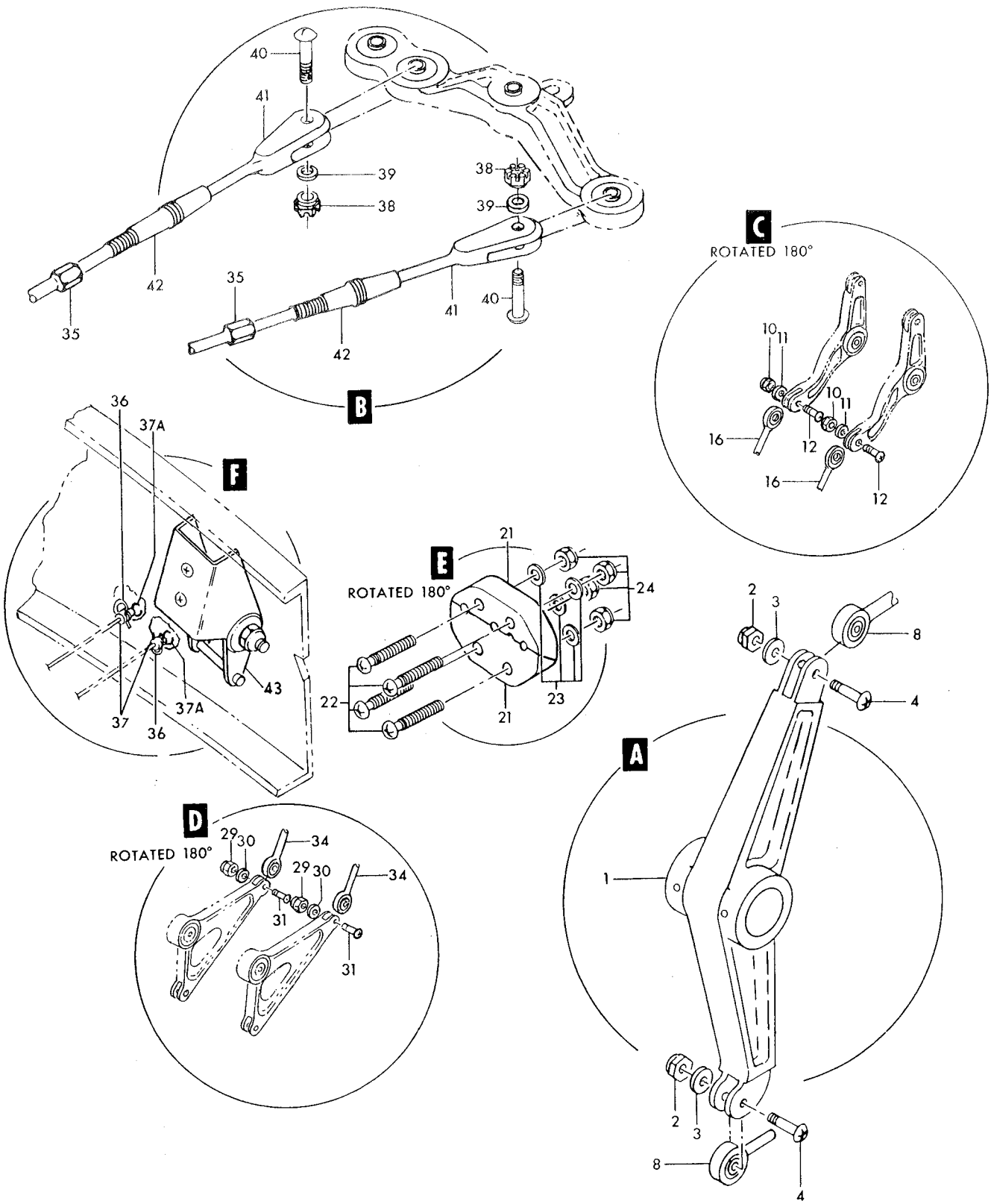

Figure 75—Stabilizer Controls (Sheet 2 of 2)

Figura e particolare	NDR	DENOMINAZIONE 1 2 3 4 5 6 7	Quant.	Codice applicab.
		STABILIZER CONTROL WALKING BEAM AND DISCONNECT RODS		
76	761653	BEAM INSTL, fus sta 603 elevator control walking *(see fig. 31 for reqd)*	REF	
-1	761651L	BRACKET ASSY, fus sta 603 walking beam	1	
-2	764998-1	BRACKET ASSY, fus sta 603 walking beam LH	1	
		Attaching Parts		
-3	AN4-5A	BOLT (88044)	4	
		✲		
-4	AN4H15A	BOLT (88044)	1	
-5	761650-5	BEAM ASSY, fus sta 603 elevator control LH	1	
-6	KS4FS137	BEARING, ball (21335)	3	
-7	DW4KE5806	BEARING, ball (21335)	1	
-8	761650-7	BEAM, fus sta 603 elevator control walking LH	1	
-9	761652	CAP, fus sta 603 walking beam	1	
		Attaching Parts		
-10	NAS221-11	SCREW (80205)	4	
		✲		
-11	761653-3	SPACER	1	
-12	761651R	BRACKET ASSY, fus sta 603 walking beam	1	
-13	764998-2	BRACKET ASSY, fus sta 603 walking beam RH	1	
		Attaching Parts		
-14	AN4-5A	BOLT (88044)	4	
-15	AN4H15A	BOLT (88044)	1	
-16	761650-6	BEAM ASSY, fus sta 603 elevator control RH	1	
		✲		
-17	KS4FS137	BEARING, ball (21335)	3	
-18	DW4KE5806	BEARING, ball (21335)	1	
-19	761650-8	BEAM, fus sta 603 elevator control walking RH	1	
-20	761652	CAP, fus sta 603 walking beam	1	
		Attaching Parts		
-21	NAS221-11	SCREW (80205)	4	
		✲		
	784220-103	CABLES INSTL, aft fus *(see fig. 32 for reqd)*	REF	
	MS24665-153	COTTER PIN (96906)	2	
-22	AN320-4	NUT (88044)	2	
-23	AN960-416L	WASHER (88044)	2	
-24	AN4-17	BOLT (88044)	2	
-25	761309-101	ROD ASSY, stabilizer disconnect *(see fig. 32 for reqd)*	REF	
-26	761308	ROD END, stabilizer disconnect	1	
-27	450448	SPRING, quick disconnect	1	
-28	450584	RING, throttle quick disconnect snap	1	
-29	450447	SLEEVE, quick disconnect	1	
-30	750376	BEARING, rod end	1	
-31	AN316-7R	NUT (88044)	1	
-32	761309-103	WELD ASSY, stabilizer disconnect rod	1	
-33	LS1605-30D	DECAL, demagnetization warning (36659)	1	
	850075-101	BRACKET INSTL, fus sta 614 stabilizer rod clip LH *(see fig. 32 for reqd)*	REF	
	850075-102	BRACKET INSTL, fus sta 614 stabilizer rod clip RH *(see fig. 32 for reqd)*	REF	
	850074-101	BRACKET, fus sta 614 stabilizer rod clip LH	1	
-34	850074-102	BRACKET, fus sta 614 stabilizer rod clip RH	1	
		Attaching Parts		
-35	NAS514P1032-8	SCREW (80205)	2	
-36	MS21042L3	NUT (96906)	2	
		✲		
	850073-101	BRACKET, stabilizer rod clip hinge LH	1	
-37	850073-102	BRACKET, stabilizer rod clip hinge RH	1	
		Attaching Parts		
-38	MS20392-2C55	PIN (96906)	1	
-39	NAS427K26	PIN (80205)	1	
-40	AN960-10	WASHER (88044)	1	
	MS24665-134	COTTER PIN (96906)	1	
		✲		

Flight Controls

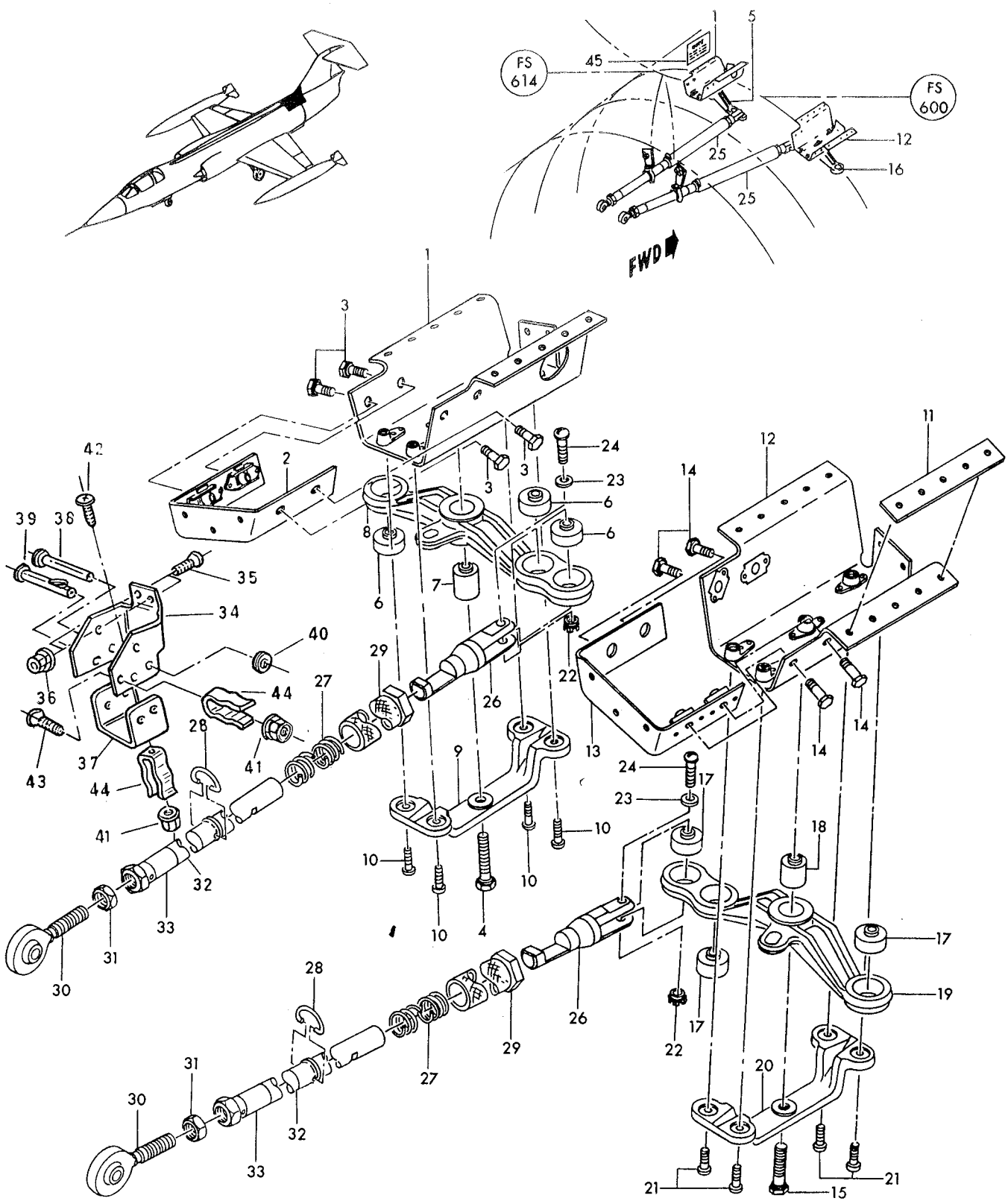

Figure 76— Stabilizer Control Walking Beam and Disconnect Rods

Figura e particolare	NDR	1 2 3 4 5 6 7 DENOMINAZIONE	Quant.	Codice applicab.
76-41	MS21042L3	NUT (96906)	2	
-42	NAS603-6	SCREW (80205)	1	
-43	NAS514P1032-8	SCREW (80205)	1	
-44	726417-3	CLIP, fus sta 614 stabilizer rod	2	
	788021-1	NAMEPLATE INSTL, stabilizer walking beam bolt instruction *(see fig. 63 for reqd)*	REF	
	788021-2	NAMEPLATE INSTL, stabilizer walking beam bolt instruction *(see fig. 63 for reqd)*	REF	
-45	774632-1	NAMEPLATE, stabilizer walking beam bolt instruction	1	

Figura e particolare	NDR	1	2	3	4	5	6	7	DENOMINAZIONE	Quant.	Codice applicab.
									RUDDER, AILERON AND ELEVATOR PULLEY BRACKET ASSEMBLIES FUSELAGE STATION 505		
77	761042-105			.					BRACKET INSTL, fus sta 505 flight control pulley LH *(see fig. 63 for reqd)*	REF	
	761042-106			.					BRACKET INSTL, fus sta 505 flight control pulley RH *(see fig. 63 for reqd)*	REF	
- 1	761042-7			.	.				BRACKET ASSY, fus sta 505 flight control pulley LH *(see fig. 72)*	1	6701-6765
	761042-107			.	.				BRACKET ASSY, fus sta 505 flight control pulley LH *(see fig. 72)*	1	6766-
									Attaching Parts		
- 2	NAS623-3-5			.	.				SCREW (80205)	2	
- 3	NAS1104-8			.	.				BOLT (80205)	1	
- 4	AN960D10			.	.				WASHER (88044)	2	
- 5	AN960D416			.	.				WASHER (88044)	2	
- 5A	AN960D416L			.	.				WASHER (88044)	AR	6746-
- 6	MS21042L3			.	.				NUT (96906)	2	
- 7	MS21042L4			.	.				NUT (96906)	1	
									*		
	MS24665-132			.	.	.			COTTER PIN (96906)	2	
- 8	AN320-4			.	.	.			NUT (88044)	2	
- 9	LS6061-416L			.	.	.			WASHER, plain (36659)	2	
-10	AN960D416			.	.	.			WASHER (88044)	1	
-11	NAS1104-26D			.	.	.			BOLT (80205)	1	
-12	NAS1104-25D			.	.	.			BOLT (80205)	1	6701-6765
	NAS1104-26D			.	.	.			BOLT (80205)	1	6766-
-13	NAS43DD4-44			.	.	.			SPACER (80205)	1	
-14	NAS43DD4-36			.	.	.			SPACER (80205)	1	
-15	NAS427T20			.	.	.			PIN (80205)	1	
-16	NAS427K25			.	.	.			PIN (80205)	1	
-17	NAS427K30			.	.	.			PIN (80205)	1	
-18	NAS427K24	A.		.	.	.			PIN (80205)	1	6701-6740
	NAS427W24	B.		.	.	.			PIN (80205)	1	
	MS24665-149	B.		.	.	.			COTTER PIN (96906)	2	
-19	MS20219-4			.	.	.			PULLEY (96906)	2	
-20	761043L			.	.	.			BRACKET, fus sta 505 aileron control pulley	1	6701-6765
	761043-103			.	.	.			BRACKET, fus sta 505 aileron control pulley	1	6766-
-21	761042-8			.	.				BRACKET ASSY, fus sta 505 flight control pulley RH *(see fig. 72)*	1	6701-6765
	761042-108			.	.				BRACKET ASSY, fus sta 505 flight control pulley RH *(see fig. 72)*	1	6766-
									Attaching Parts		
-22	NAS623-3-5			.	.				SCREW (80205)	2	
-23	NAS1104-8			.	.				BOLT (80205)	1	
-24	AN960D10			.	.				WASHER (88044)	2	
-25	AN960D416			.	.				WASHER (88044)	2	
-26	MS21042L3			.	.				NUT (96906)	2	
-27	MS21042L4			.	.				NUT (96906)	1	
									*		
	MS24665-132			.	.	.			COTTER PIN (96906)	2	
-28	AN320-4			.	.	.			NUT (88044)	2	
-29	LS6061-416L			.	.	.			WASHER, plain (36659)	2	
-30	AN960D416			.	.	.			WASHER (88044)	1	
-31	NAS1104-26D			.	.	.			BOLT (80205)	1	
-32	NAS1104-25D			.	.	.			BOLT (80205)	1	6701-6765
	NAS1104-26D			.	.	.			BOLT (80205)	1	6766-
-33	NAS43DD4-44			.	.	.			SPACER (80205)	1	
-34	NAS43DD4-36			.	.	.			SPACER (80205)	1	
-35	NAS427T20			.	.	.			PIN (80205)	1	
-36	NAS427K25			.	.	.			PIN (80205)	1	
-37	NAS427K30			.	.	.			PIN (80205)	1	
-38	NAS427K24	A.		.	.	.			PIN (80205)	1	6701-6740
	NAS427W24	B.		.	.	.			PIN (80205)	1	
	MS24665-149	B.		.	.	.			COTTER PIN (96906)	2	
-39	MS20219-4			.	.	.			PULLEY (96906)	2	
-40	761043R			.	.	.			BRACKET, fus sta 505 aileron control pulley	1	6701-6765

Flight Controls

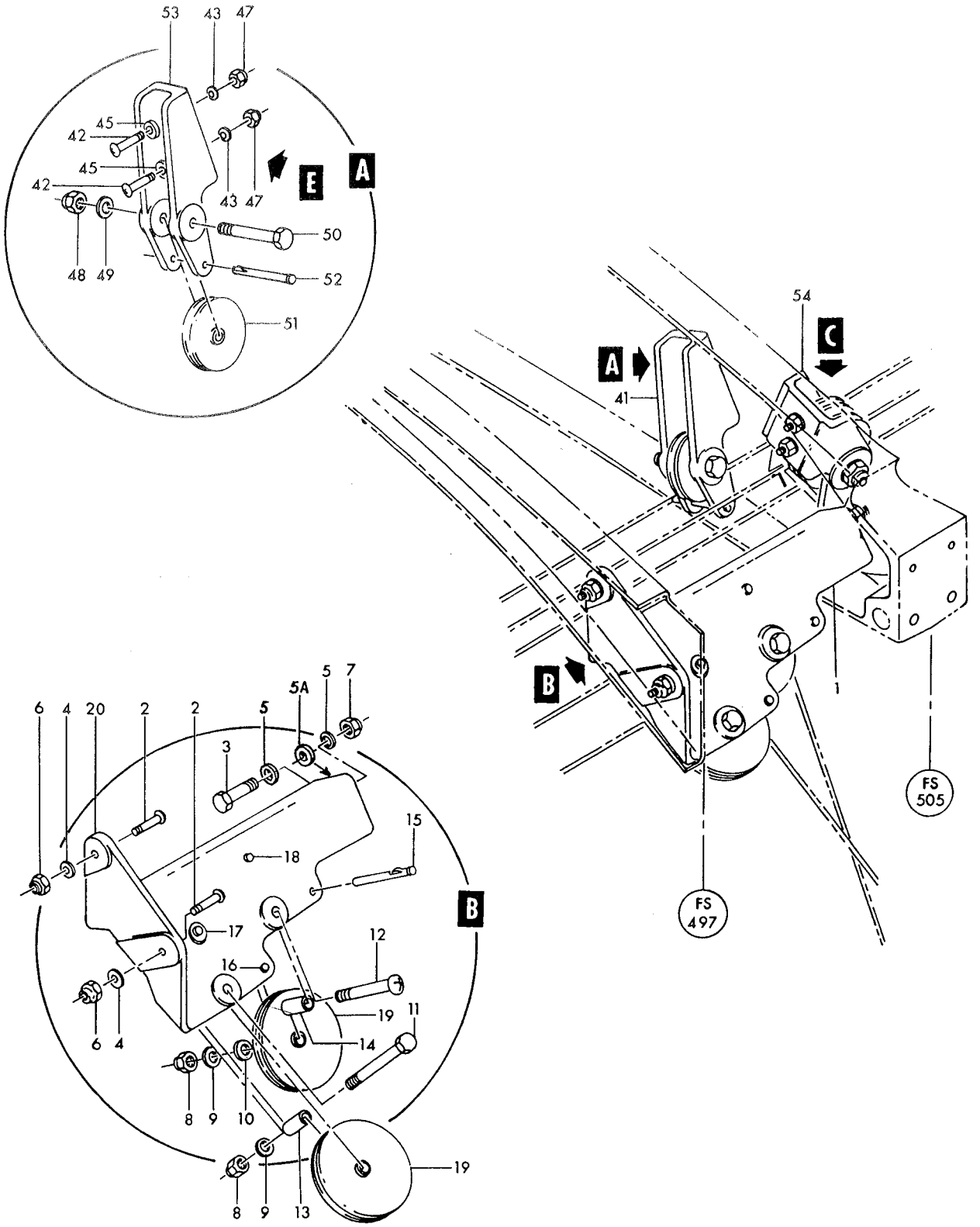

Figure 77— Rudder, Aileron and Elevator Pulley Bracket Assemblies Fuselage Station 505 (Sheet 1 of 2)

Flight Controls

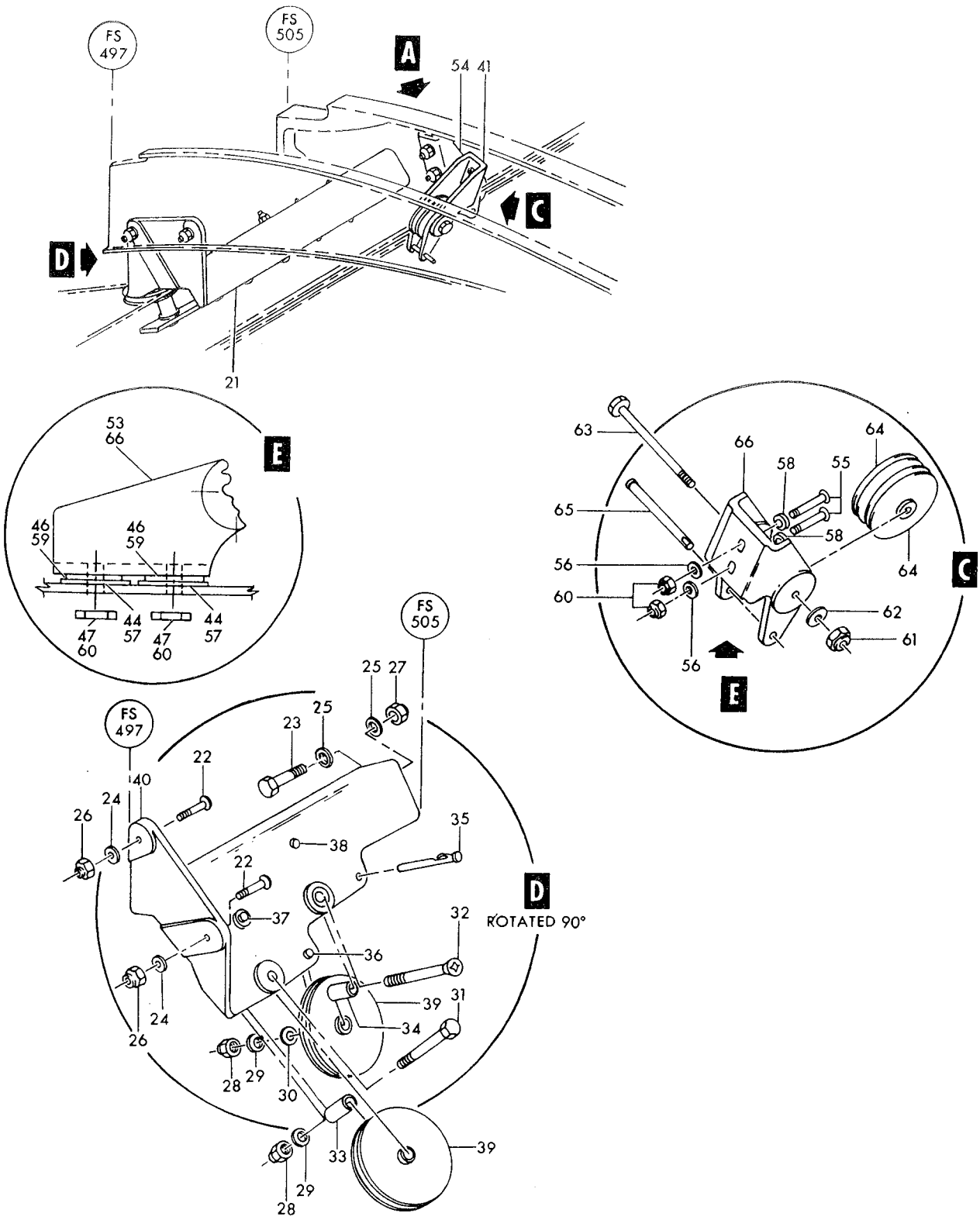

Figure 77— Rudder, Aileron and Elevator Pulley Bracket Assemblies Fuselage Station 505 (Sheet 2 of 2)

Figura e particolare	NDR	DENOMINAZIONE 1 2 3 4 5 6 7	Quant.	Codice applicab.
77	761043-101	BRACKET, fus sta 505 aileron control pulley	1	6766-
-41	761042-9	BRACKET ASSY, fus sta 505 flight control pulley *(see fig. 75)*	1	
		Attaching Parts		
-42	NAS623-3-9	SCREW (80205)	2	
-43	AN960D10	WASHER (88044)	2	
-44	AN970-3	WASHER (88044)	2	
-45	LS1551-190-688	WASHER, annular serrated (under head) (36659)	2	
-46	1110-00	WASHER, external locking shakeproof (78189)	2	
-47	MS21042L3	NUT (96906)	2	
		☼		
	MS24665-134	COTTER PIN (96906)	1	
-48	AN320-5	NUT (88044)	1	
-49	AN960D516	WASHER (88044)	1	
-50	NAS1105-21D	BOLT (80205)	1	
-51	MS20220-1	PULLEY (96906)	1	
-52	NAS427K20	PIN (80205)	1	
-53	761044-3	BRACKET, fus sta 505 flight control pulley	1	
-54	761042-11	BRACKET ASSY, fus sta 505 flight control pulley *(see fig. 66 and 75)*	1	
		Attaching Parts		
-55	NAS623-3-9	SCREW (80205)	2	
-56	AN960D10	WASHER (88044)	2	
-57	AN970-3	WASHER (88044)	2	
-58	LS1551-190-688	WASHER, annular serrated (under head) (36659)	2	
-59	1110-00	WASHER, external locking shakeproof (78189)	2	
-60	MS21042L3	NUT (96906)	2	
		☼		
-61	AN320-5	NUT (88044)	1	
-62	AN960D516	WASHER (88044)	1	
-63	NAS1105-31D	BOLT (80205)	1	
-64	1220A1H	PULLEY, flight control (71503)	2	
	MS24665-132	COTTER PIN (96906)	2	
-65	NAS427W30	PIN (80205)	1	
-66	761044-4	BRACKET, fus sta 505 flight control pulley	1	

A - Removed per AA.1F-104-OT-674
B - Reqd per AA.1F-104-OT-674

Figura e particolare	NDR	DENOMINAZIONE 1 2 3 4 5 6 7	Quant.	Codice applicab.
		THROTTLE AND FLAP CONTROLS		
78	760260-103	HOUSING INSTL, throttle control *(see fig. 63 for reqd)*	REF	
-1	794419-105	HOUSING ASSY, throttle control *(see fig. 217)*	1	
	760284	FULCRUM ASSY, throttle control lever	1	
	MS24665-132	COTTER PIN (96906)	1	
-2	AN960-10L	WASHER (88044)	1	
-3	MS20392-2C29	PIN (96906)	1	
-4	NAS43DD3-14	SPACER (80205)	2	
-5	AN665-21R	TERMINAL (88044)	1	
-6	MS21042L06	NUT (96906)	3	
-7	AN960D6	WASHER (88044)	3	
-8	AN515-6R18	SCREW (88044)	1	
-9	NAS43DD1-48	SPACER (80205)	1	
-10	AN507-632R18	SCREW (88044)	2	
-11	MS25383-1	SWITCH, (S60) (Ldg gear warning) (96906)	1	
-12	AN3169-1	ACTUATOR (88044)	1	
	MS24665-132	COTTER PIN (96906)	1	
-13	MS20392-2C61	PIN (96906)	1	
-14	726084	COLLAR, throttle control	1	
-15	760280-4	BRACKET, landing gear warning switch	1	
-16	MS16624-1212	RING (96906)	1	
-17	760280-3	BRACKET, landing gear warning switch	1	
	760262	FULCRUM ASSY, throlttle control	1	
-18	177270	BUSHING, throttle control	2	
-19	760262-3	FULCRUM, throttle control	1	
-20	450422	DISCONNECT, throttle control spring	1	
-21	450423	SPRING, throttle lever fulcrum	1	
-22	3L4873-7	SWITCH ASSY, cockpit throttle control cluster hinged (82833) (Lockheed spec dwg 619227-7) (see T.O. 8S5-3-9-13)	1	
-22A	MS25089-4B	SWITCH, (S61) (mike button) (96906)	1	
-22B	MS35058-21	SWITCH, (S30) (speed brake) (96906)	1	
		Attaching Parts		
-23	NAS1105-30D	BOLT (80205)	1	
-24	AN960D516	WASHER (88044)	1	
-25	AN320-5	NUT (88044)	1	
	MS24665-136	COTTER PIN (96906)	1	
-26	AN502-10-22	SCREW (88044)	1	
-27	727952-1	SPRING, landing gear warning switch	1	
-28	AN960-10L	WASHER (88044)	1	
-29	AAF750F5	CLIP (81348)	2	
		Attaching Parts		
-30	AN507-632R6	SCREW (88044)	2	
-31	MS21042L06	NUT (96906)	2	
-32	450435	TRUNNION, landing gear warning switch	1	
-34	794420-1	SUPPORT ASSY, flap switch	1	
		Attaching Parts		
	NAS623-3-4-6	SCREW (80205)	3	
	AN960D10	WASHER (88044)	3	
	MS21042L3	NUT (96906)	3	
	794420-3	SUPPORT, flap switch	1	
-35	AN202KP25B	BEARING (88044)	1	
-36	B68-0H	BEARING (60380)	2	
-38	765100	SHIM, throttle control fulcrum	1	
-38A	MS21042L4	NUT (96906)	1	
-38B	AN960D416	WASHER (88044)	1	
-39	NAS623-4-10	SCREW (80205)	1	
-40	3000-1	SWITCH, (S62) 3 pos rotary selector (flap control) (81896) (Lockheed spec dwg 613309-3)	1	
		Attaching Parts		
	AN500A8-8	SCREW (88044)	4	

Flight Controls

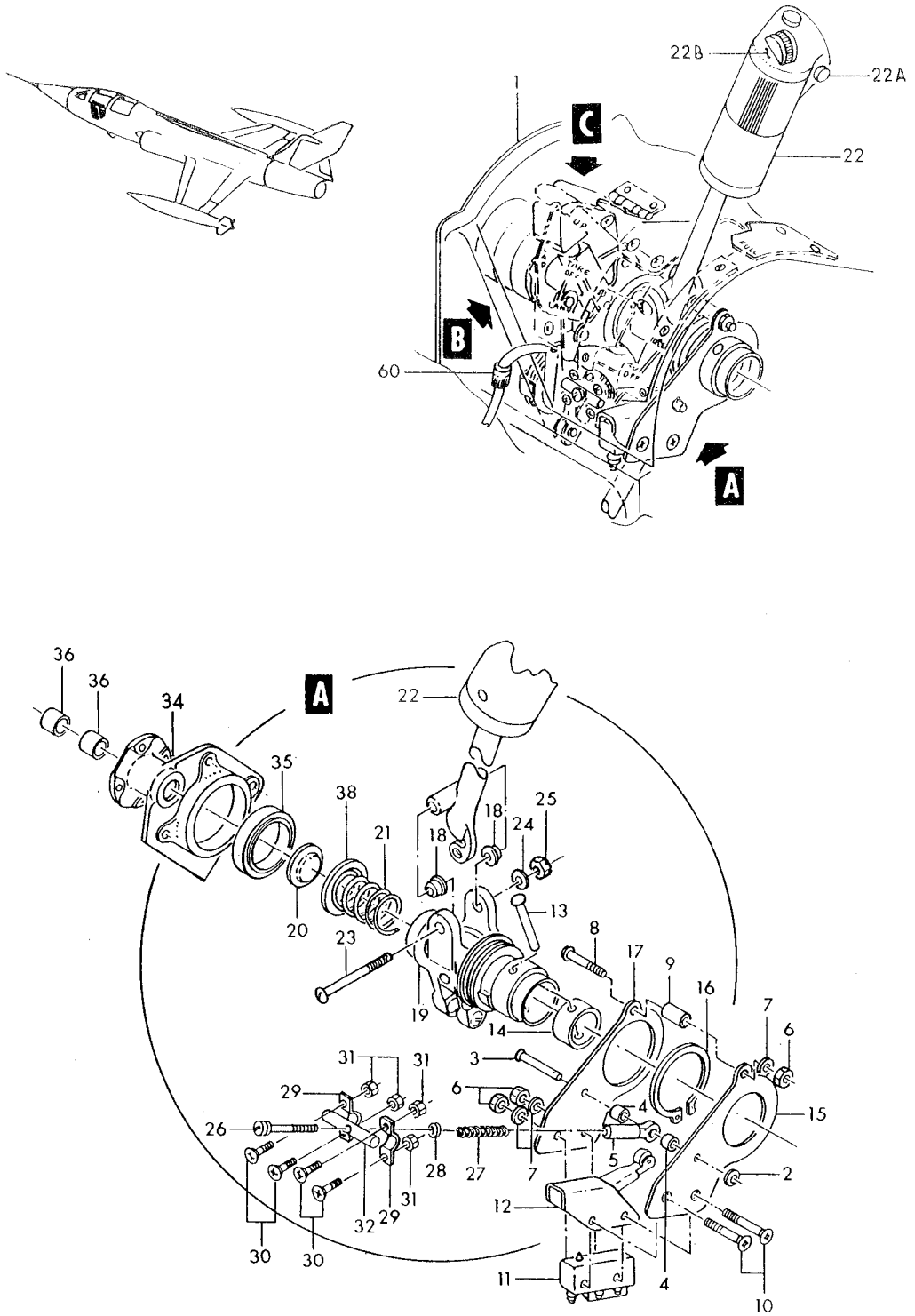

Figure 78— Throttle and Flap Controls (Sheet 1 of 2)

Flight Controls

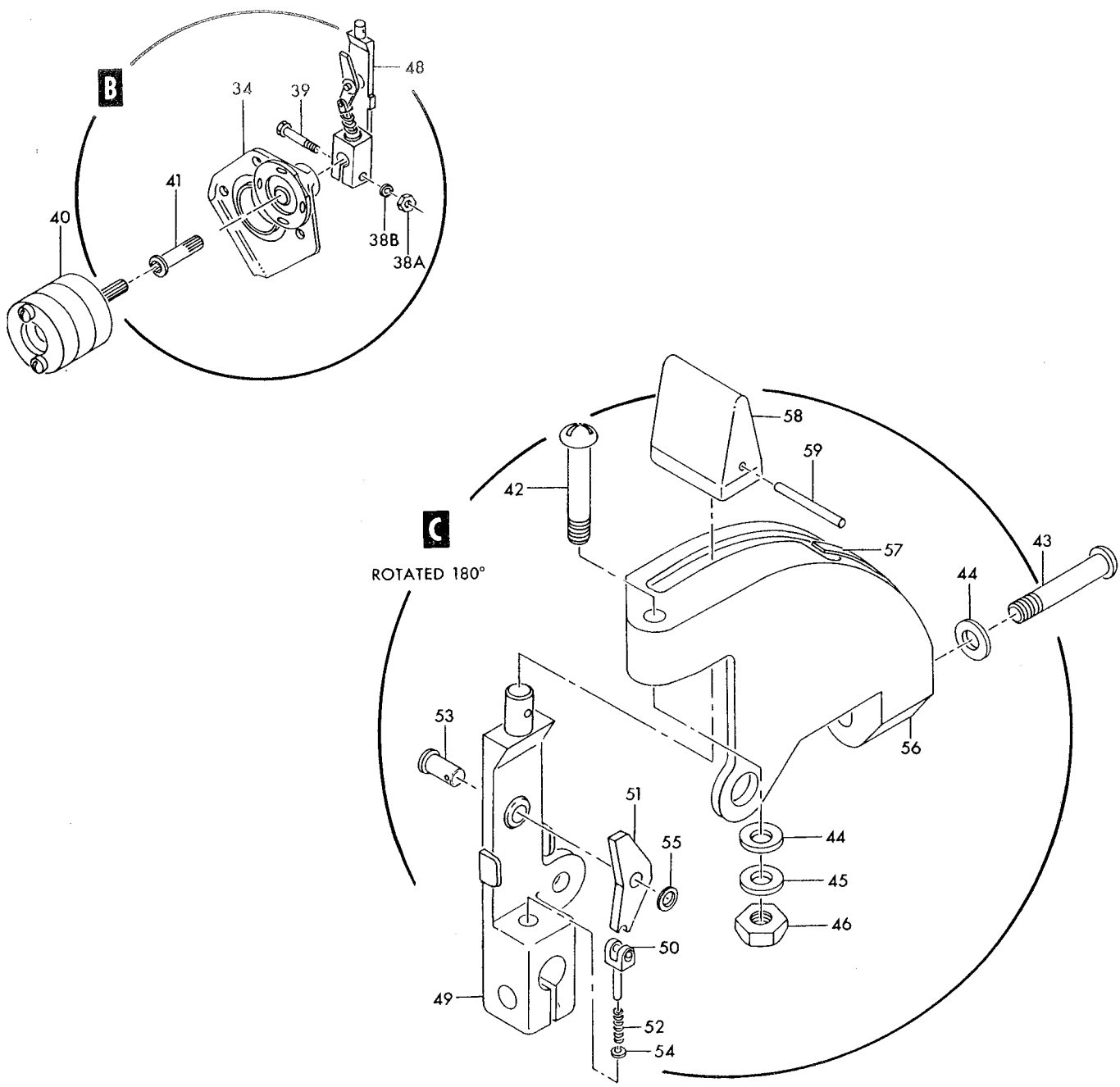

Figure 78— Throttle and Flap Controls (Sheet 2 of 2)

Figura e particolare	NDR	DENOMINAZIONE	Quant.	Codice applicab.
78	AN960D8	WASHER (88044)	4	
		——————☼——————		
-41	766536-1	SHAFT, aileron travel limiter	1	
	786200-501	HOUSING ASSY, flap control	1	
		Attaching Parts		
-42	NAS623-3-18	SCREW (80205)	1	
-43	NAS221-19	SCREW (80205)	1	
-44	727000	WASHER	AR	
-45	AN960D10	WASHER (88044)	1	
-46	MS21042L3	NUT (96906)	1	
		——————☼——————		
-48	786199-501	LEVER ASSY, flap control	1	
-49	781048-5	LEVER, flap control	1	
-50	781050-1	ROD ASSY, flap control	1	
-51	786198-1	PAWL, flap control	1	
-52	728388-1	SPRING, flap control	1	
	MS24665-130	COTTER PIN (96906)	1	
-53	MS20392-2C13	PIN (96906)	1	
-54	AN960-6	WASHER (88044)	1	
-55	AN960-10L	WASHER (88044)	1	
-56	781053-1	QUADRANT ASSY, flap control	1	
	781053-5	QUADRANT, flap control	1	
-57	781052-1	SPRING, flap control	1	
-58	776918-1	KNOB	1	
-59	NAS561P3-12	PIN (80205)	1	
	849507-101	HARNESS ASSY, throttle quadrant wiring	1	
-60	EMRA34PM1B106	CONNECTOR, (P79) plug (throttle quadrant P-119 disc) (81312)	1	

Figura e particolare	NDR	1 2 3 4 5 6 7 DENOMINAZIONE	Quant.	Codice applicab.
		THROTTLE CONTROL CABLES AND BRACKETS FUSELAGE STATION 206 TO 255		
79	850656-101	BRACKET INSTL, throttle control drive pulley *(see fig. 63 for reqd)*	REF	
	MS24665-134	COTTER PIN (96906)	2	
- 1	AN320-3	NUT (88044)	2	
- 1A	AN960-10L	WASHER (88044)	2	
- 2	NAS1103-22D	BOLT (80205)	1	
- 3	NAS1103-13D	BOLT (80205)	1	
	726095	PUSHROD ASSY, throttle control drive	1	
- 4	RE3M6A	BEARING, rod end ball (21335)	2	
- 5	AN316-6R	NUT (88044)	2	
- 6	726095-3	ROD	1	
	850656-103	BRACKET ASSY, throttle control drive pulley	1	
		Attaching Parts		
- 7	NAS623-3-5	SCREW (80205)	2	
- 8	NAS1203-4	SCREW (80205)	2	
- 9	MS21042L3	NUT (96906)	4	
-10	MS16624-1062	SNAP RING (96906)	1	
-11	MS21042L4	NUT (96906)	1	
-12	NAS623-4-12	SCREW (80205)	1	
-13	760200-101	SHAFT, throttle control drive pulley	1	
-14	760525-101	SPACER, throttle control drive pulley	1	
-15	726091	SPACER, throttle control arm	1	
-16	850755-101	PULLEY, throttle control drive	1	
-16A	850754-105	CAM, throttle switch	1	
-16B	NAS623-3-9	A. SCREW (80205)	2	6701-6765
	NAS1203-10	B. SCREW (80205)	2	
-16C	AN960D10	A. WASHER (88044)	2	6701-6765
	LS2816-4	B. WASHER (36659)	2	
-16D	NAS43DD3-12	SPACER (80205)	3	
-17	760198	LEVER, throttle control drive pulley	1	
-18	NAS47T11	PIN (80205)	1	
-19	MS25253-4	SWITCH, (S169) (Canopy unsafe warning) (96906)	1	
-20	JV20	ROLLER LEVER (91929)	1	
-20A	NAS600-16	SCREW (80205)	2	
-20B	AN960D4	WASHER (88044)	2	
	NAS42DD4-12	A. SPACER (80205)	2	6701-6765
-20C	NAS42DD4-10	B. SPACER (80205)	2	
-20D	MS21042L04	NUT (96906)	2	
	760195-101	BRACKET ASSY, throttle control drive pulley	1	
-21	AN201KP8A	BEARING (88044)	1	
-22	AN201KP12A	BEARING (88044)	1	
-23	760195-103	BRACKET	1	
-23A	846007-101	GUARD, throttle control cable	1	
-23B	NAS1197-10	WASHER (80205)	1	
-23C	MS21042L3	NUT (96906)	1	
	761823-3L	BRACKET INSTL, fus sta 255 throttle control pulley *(see fig. 63 for reqd)*	REF	
-24	761823-9	BRACKET ASSY, throttle control	1	
		Attaching Parts		
-25	NAS623-3-10	SCREW (80205)	3	
-26	AN960D10	WASHER (88044)	3	
-27	NAS1197-10	WASHER (80205)	3	
-27A	MS21042L3	NUT (96906)	3	
-28	NAS427K21	PIN (80205)	1	
-29	AN320-4	NUT (88044)	1	
-30	NAS1197-416	WASHER (80205)	1	
-31	LS6061-416L	WASHER, plain (36659)	1	
	MS24665-132	COTTER PIN (96906)	1	

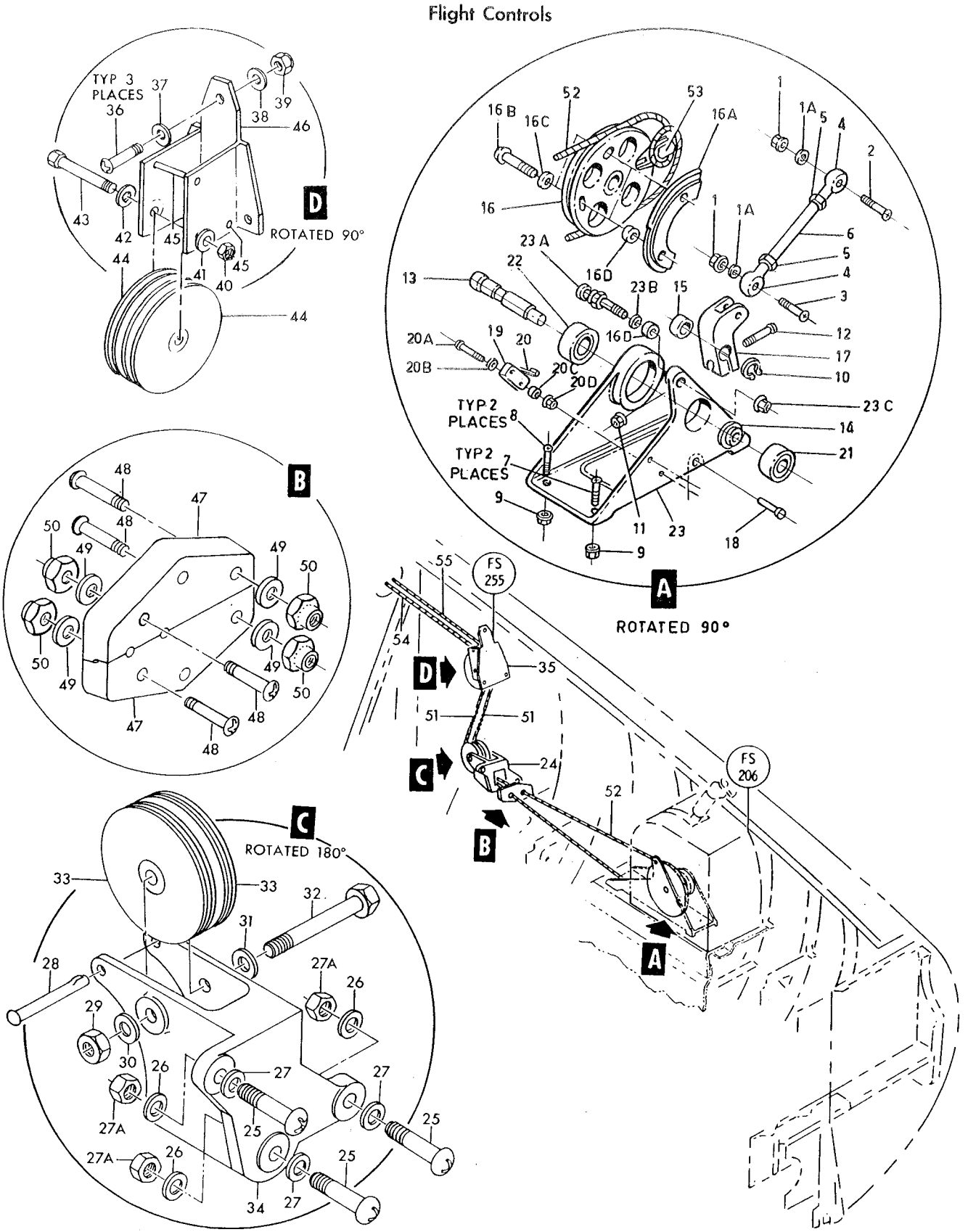

Figure 79— Throttle Control Cables and Brackets Fuselage Station 206 to 255

Figura e particolare	NDR	1 2 3 4 5 6 7 DENOMINAZIONE	Quant.	Codice applicab.
79-32	NAS1104-22D	. . . BOLT (80205)	1	
-33	MS20219-4	. . . PULLEY (96906)	2	
-34	760143L	. . . BRACKET, fus sta 255 throttle control lower pulley	1	
-35	761823-11	. . BRACKET ASSY, upper	1	
		Attaching Parts		
-36	NAS623-3-6	. . SCREW (80205)	3	
-37	AN960D10	. . WASHER (88044)	3	
-38	AN960-10L	. . WASHER (88044)	3	
-39	MS21042L3	. . NUT (96906)	3	
		*		
	MS24665-132	. . . COTTER PIN (96906)	1	
-40	AN320-4	. . . NUT (88044)	1	
-41	AN960-416	. . . WASHER (88044)	1	
-42	AN960-416L	. . . WASHER (88044)	1	
-43	NAS1104-23D	. . . BOLT (80205)	1	
-44	MS20219-4	. . . PULLEY (96906)	2	
-45	NAS427K23	. . . PIN (80205)	2	
-46	775293-1	. . . BRACKET, fus sta 255 upper throttle control pulley	1	
	761968L	. GUIDE INSTL, fus sta 255 cable *(see fig. 63 for reqd)*	REF	
-47	764219	. . GUIDE, fus sta 255 throttle cable	2	
		Attaching Parts		
-48	AN515-8R14	. . SCREW (88044)	4	
-49	AN960D8	. . WASHER (88044)	4	
-50	MS21042L8	. . NUT (96906)	4	
		*		
	784220-109	. CABLE INSTL, LH panel flight control *(see fig. 63 for reqd)*	REF	6701-6720
	784220-107	. CABLE INSTL, LH panel flight control *(see fig. 63 for reqd)*	REF	6721-
-51	RA2258-3	. . TERMINAL, quick disconnect (80097)	2	
-52	769257-1	. . CABLE ASSY, forward throttle	1	6701-6720
	769257-101	. . CABLE ASSY, forward throttle	1	6721-
-53	NAS35	. . LOCK (80205)	1	
-54	775663-1	. . CABLE ASSY, inboard throttle *(see fig. 80)*	1	
-55	775662-1	. . CABLE ASSY, outboard throttle *(see fig. 80)*	1	

A - Removed per AA.1F-104S-OT-151
B - Reqd per AA.1F-104S-OT-151

Figura e particolare	NDR	1 2 3 4 5 6 7 DENOMINAZIONE	Quant.	Codice applicab.
		THROTTLE CONTROL CABLES AND BRACKETS FUSELAGE STATION 255 TO 364		
80	784220-109	. CABLE INSTL, LH panel flight control *(see fig. 63 for reqd)*	REF	6701-6720
	784220-107	. CABLE INSTL, LH panel flight control *(see fig. 63 for reqd)*	REF	6721-
- 1	775663-1	. . CABLE ASSY, inboard throttle *(see fig. 79 for reqd)*	REF	
- 2	775662-1	. . CABLE ASSY, outboard throttle *(see fig. 79 for reqd)*	REF	
- 3	RA2258-3	. . TERMINAL, quick disconnect (80097)	2	
	769240-1	. FAIRLEAD INSTL, throttle cable (fuselage station 273 and 289) *(see fig. 63 for reqd)*	REF	
- 4	769241-3	. . FAIRLEAD, throttle cable split	4	
		Attaching Parts		
	AN515-8R10	. . SCREW (88044)	1	
	AN960D8	. . WASHER (88044)	1	
	MS21042L08	. . NUT (96906)	1	
		———— * ————		
	769240-3	. SEAL INSTL, throttle cable (fuselage station 310) *(see fig. 63 for reqd)*	REF	
- 5	769242-1	. . SEAL, throttle cable split	2	
		Attaching Parts		
- 6	AN515-8R12	. . SCREW (88044)	1	
- 7	AN960D8	. . WASHER (88044)	1	
- 8	MS21042L08	. . NUT (96906)	1	
		———— * ————		
- 9	763999	. . SPACER, fairlead split	1	
-10	769259-1	. CABLE ASSY, aft outboard throttle *(see fig. 81 for reqd)*	REF	
-11	769258-1	. CABLE ASSY, aft inboard throttle *(see fig. 81 for reqd)*	REF	
	775559-1	. BRACKET INSTL, fuselage station 328 throttle control *(see fig. 63 for reqd)*	REF	
-12	776182-1	. . BRACKET ASSY, fuselage station 328 throttle control	1	
		Attaching Parts		
-13	NAS517-3-2	. . SCREW (80205)	2	
-14	NAS517-3-4	. . SCREW (80205)	2	
	AN960D10	. . WASHER (88044)	2	
	MS21042L3	. . NUT (96906)	2	
		———— * ————		
	NAS1222-3D	. . . INSERT (80205)	2	
-15	776182-3	. . . BRACKET, throttle control	1	
-16	AN320-3	. . NUT (88044)	1	
-17	AN960D10	. . WASHER (88044)	1	
-18	AN23-21	. . BOLT (88044)	1	
-19	M1B	. . PULLEY, anti-friction control (83451)	2	
-20	NAS427K14	. . PIN (80205)	1	
	MS24665-132	. . COTTER PIN (96906)	1	
	775560-1	. BRACKET INSTL, fuselage station 335 throttle control *(see fig. 63 for reqd)*	REF	
-21	776184-1	. . BRACKET ASSY, fuselage station 335 throttle control	1	
		Attaching Parts		
-22	NAS517-3-5	. . SCREW (80205)	2	
-23	NAS517-3-4	. . SCREW (80205)	2	
	AN960D10	. . WASHER (88044)	2	
	MS21042L3	. . NUT (96906)	2	
		———— * ————		
	NAS1222-3D	. . . INSERT (80205)	2	
-24	776184-3	. . . BRACKET, throttle control	1	
-25	AN320-3	. . NUT (88044)	1	
-26	AN960D10	. . WASHER (88044)	1	
-27	AN23-21	. . BOLT (88044)	1	
-28	M1B	. . PULLEY, anti-friction control (83451)	2	
-29	NAS427K14	. . PIN (80205)	1	
	MS24665-132	. . COTTER PIN (96906)	1	
	769240-5	. FAIRLEAD INSTL, throttle cable (fuselage station 335) *(see fig. 63 for reqd)*	REF	
-30	769241-3	. . FAIRLEAD, throttle cable split	2	

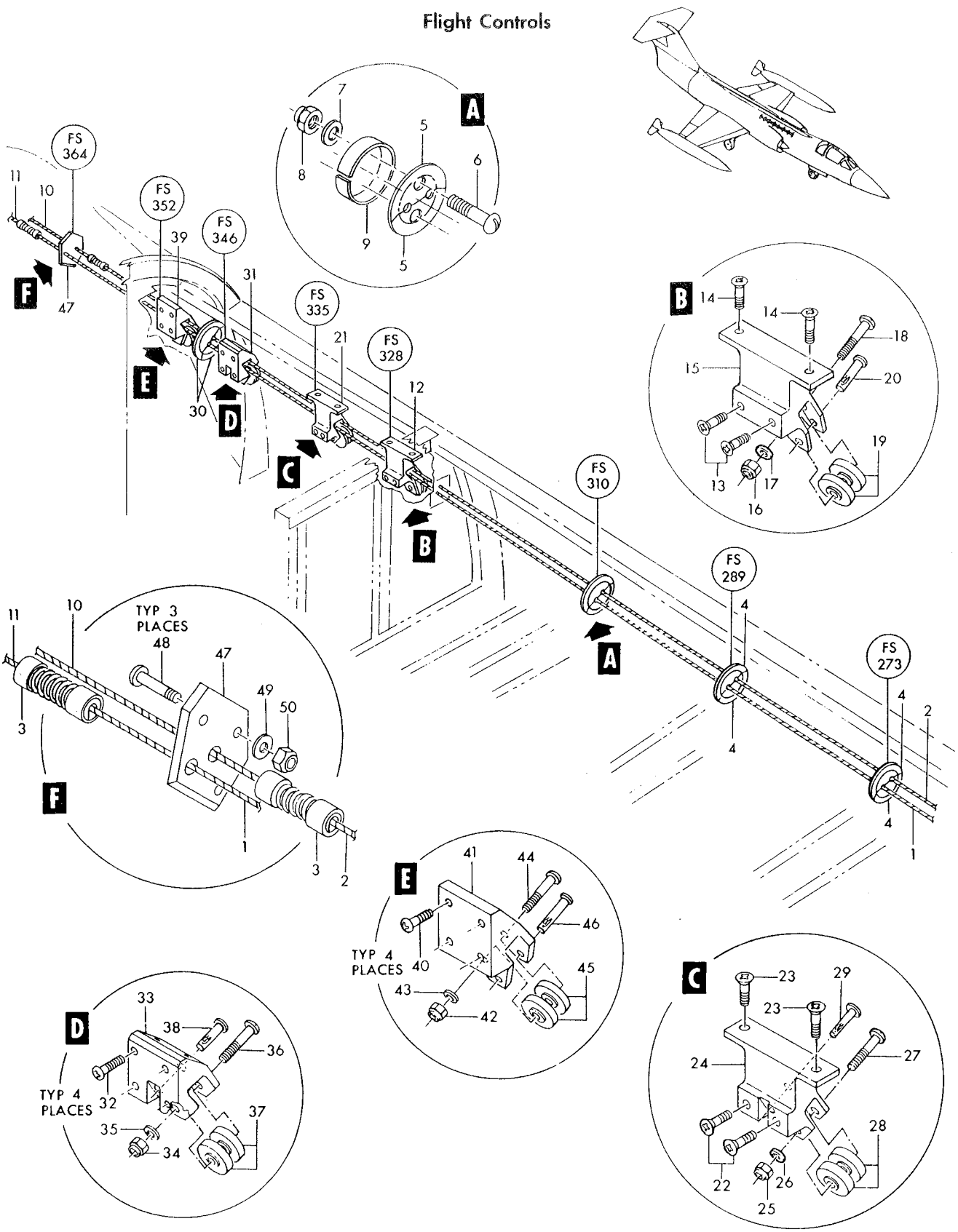

Figure 80—Throttle Control Cables and Brackets Fuselage Station 255 to 364

Figura e particolare	NDR	DENOMINAZIONE 1 2 3 4 5 6 7	Quant.	Codice applicab.
		Attaching Parts		
80	AN515-8R10	. . SCREW (88044)	1	
	AN960D8	. . WASHER (88044)	1	
	MS21042L08	. . NUT (96906)	1	
	775561-1	. BRACKET INSTL, fuselage station 346 throttle control *(see fig. 63 for reqd)*	REF	
-31	776186-1	. . BRACKET ASSY, fuselage station 346 throttle control	1	
		Attaching Parts		
-32	NAS623-3-5	. . SCREW (80205)	4	
	NAS1222-3D	. . . INSERT (80205)	4	
-33	776186-3	. . . BRACKET, throttle control	1	
-34	AN320-3	. . NUT (88044)	1	
-35	AN960D10	. . WASHER (88044)	1	
-36	AN23-21	. . BOLT (88044)	1	
-37	M1B	. . PULLEY, anti-friction control (83451)	2	
-38	NAS427K14	. . PIN (80205)	1	
	MS24665-132	. . COTTER PIN (96906)	1	
	775562-1	. BRACKET INSTL, fuselage station 352 throttle control *(see fig. 63 for reqd)*	REF	
-39	776188-1	. . BRACKET ASSY, fuselage station 352 throttle control	1	
		Attaching Parts		
-40	NAS623-3-4	. . SCREW (80205)	4	
	NAS1222-3D	. . . INSERT (80205)	4	
-41	776188-3	. . . BRACKET, throttle control	1	
-42	AN320-3	. . NUT (88044)	1	
-43	AN960D10	. . WASHER (88044)	1	
-44	AN23-21	. . BOLT (88044)	1	
-45	M1B	. . PULLEY, anti-friction control (83451)	2	
-46	NAS427K14	. . PIN (80205)	1	
	MS24665-132	. . COTTER PIN (96906)	1	
	763114L	. FAIRLEAD INSTL, fuselage station 364 *(see fig. 63 for reqd)*	REF	
-47	763114-3L	. . FAIRLEAD	1	
		Attaching Parts		
-48	AN515-8R8	. . SCREW (88044)	3	
-49	AN960D8	. . WASHER (88044)	3	
-50	MS21042L08	. . NUT (96906)	3	

Figura e particolare	NDR	DENOMINAZIONE 1 2 3 4 5 6 7	Quant.	Codice applicab.
		THROTTLE CONTROL CABLES AND BRACKETS FUSELAGE STATION 364 AFT		
81	784220-105	. CABLES INSTL, mid fus flight control *(see fig. 63 for reqd)*	REF	
- 1	769258-1	. . CABLE ASSY, aft inboard throttle *(see fig. 80)*	1	
- 2	769259-1	. . CABLE ASSY, aft outboard throttle *(see fig. 80)*	1	
- 3	AN669S3RH	. . . TERMINAL (88044)	1	
	MS20664C3	. . . TERMINAL (96906)	1	
- 4	NAS649B16S	. . BARREL (80205)	2	
- 5	768809-5	. . CABLE ASSY, aft throttle control	1	
- 6	NAS650S3LH	. . . TERMINAL (80205)	2	
	769240-7	. FAIRLEAD INSTL, throttle cable (fuselage station 388) *(see fig. 63 for reqd)*	REF	
	769240-9	. FAIRLEAD INSTL, throttle cable (fuselage station 411) *(see fig. 63 for reqd)*	REF	
- 7	769241-1	. . FAIRLEAD, throttle cable split	2	
		Attaching Parts		
- 8	AN515-8R8	. . SCREW (88044)	1	
- 9	AN960D8	. . WASHER (88044)	1	
-10	MS21042L08	. . NUT (96906)	1	
		✲		
	769240-101	. FAIRLEAD INSTL, throttle cable (fuselage station 422) *(see fig. 63 for reqd)*	REF	
-11	769241-101	. . FAIRLEAD, throttle cable split	2	
		Attaching Parts		
-12	AN515-8R10	. . SCREW (88044)	1	
-13	AN960D8	. . WASHER (88044)	1	
-14	MS21042L08	. . NUT (96906)	1	
		✲		
	763115-3	. BRACKET ASSY, fuselage station 451 throttle control fairlead bearing LH *(see fig. 31 for reqd)*	REF	
-15	NAS427K14	. . PIN (80205)	1	
	MS24665-132	. . COTTER PIN (96906)	1	
-16	AN320-3	. . NUT (88044)	1	
-17	AN960D10	. . WASHER (88044)	1	
-18	AN23-19	. . BOLT (88044)	1	
-19	FL3C3	. . BEARING, fairlead (21335)	2	
-20	LS3859-3-5	. . BUSHING, plain (36659)	1	
-21	762904	. . BRACKET, fuselage station 451 throttle control cables fairlead bearing	1	
	769240-13	. FAIRLEAD INSTL, throttle cable (fuselage station 457 and 473) *(see fig. 63 for reqd)*	REF	
-22	769241-9	. . FAIRLEAD, throttle cable split	2	
		Attaching Parts		
-23	AN515-8R10	. . SCREW (88044)	1	
-24	AN960D8	. . WASHER (88044)	1	
-25	MS21042L08	. . NUT (96906)	1	
		✲		
	769240-15	. SEAL INSTL, throttle cable (fuselage station 505) *(see fig. 63 for reqd)*	REF	
-26	779594-1	. . GUARD, firewall throttle cable seal	2	
-27	779595-1	. SEAL, split firewall throttle cable	2	
		Attaching Parts		
-28	AN515-8R10	. . SCREW (88044)	2	
		✲		
	783063-3	. BRACKET INSTL, mid fus throttle control longeron *(see fig. 63 for reqd)*	REF	
-29	783061-1	. . BRACKET ASSY, fuselage station 516 throttle control cable pulley *(see fig. 113)*	1	
		Attaching Parts		
-30	NAS623-3-12	. . SCREW (80205)	2	
-31	NAS623-3-14	. . SCREW (80205) *(see fig. 113)*	2	
-32	AN960D10	. . WASHER (88044)	1	
-33	LS881-4	. . WASHER, plain (36659)	1	
-34	MS21042L3	. . NUT (96906)	2	
		✲		
	MS24665-132	. . COTTER PIN (96906)	1	
-35	AN320-4	. . NUT (88044)	1	

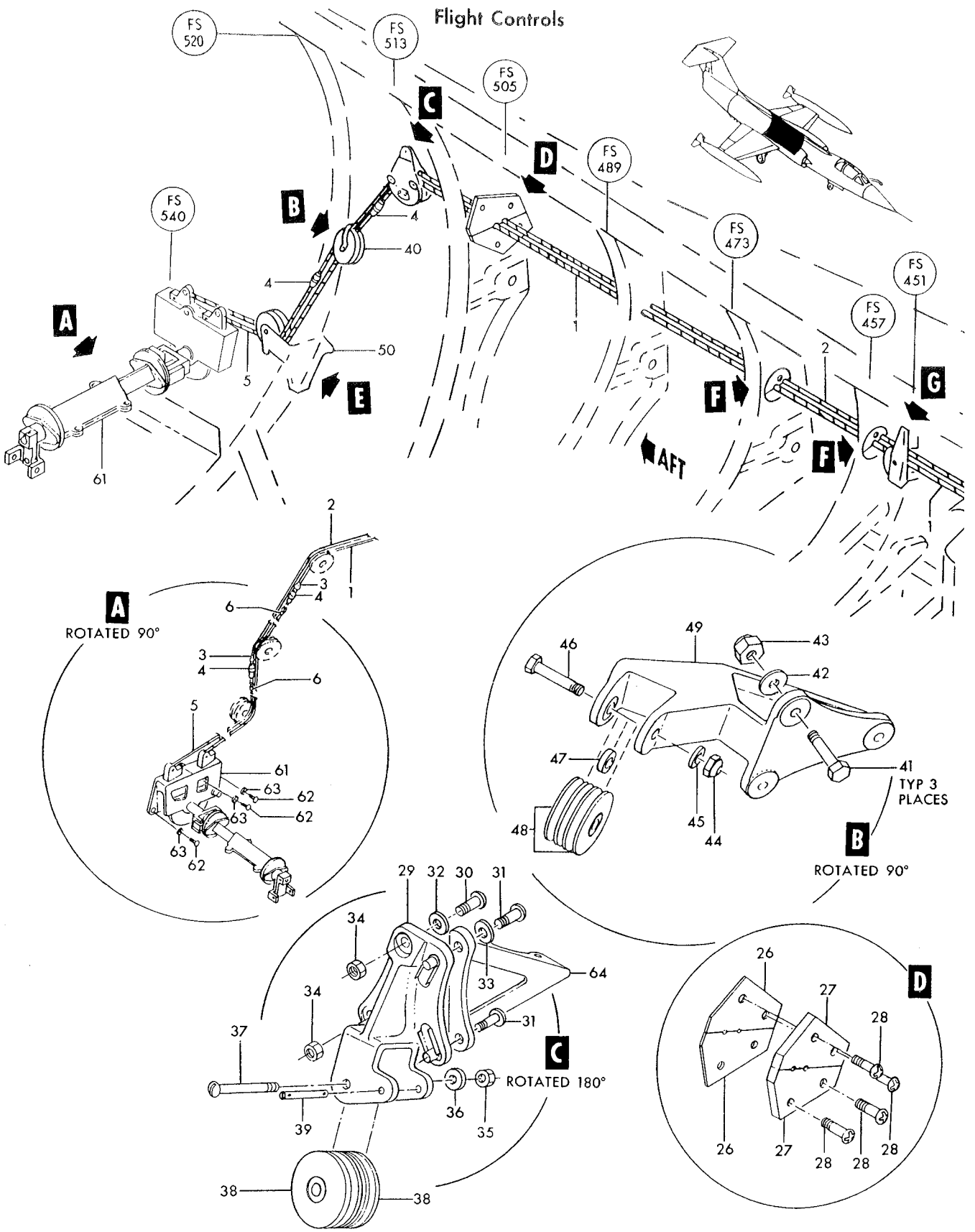

Figure 81—Throttle Control Cables and Brackets Fuselage Station 364 Aft (Sheet 1 of 2)

Flight Controls

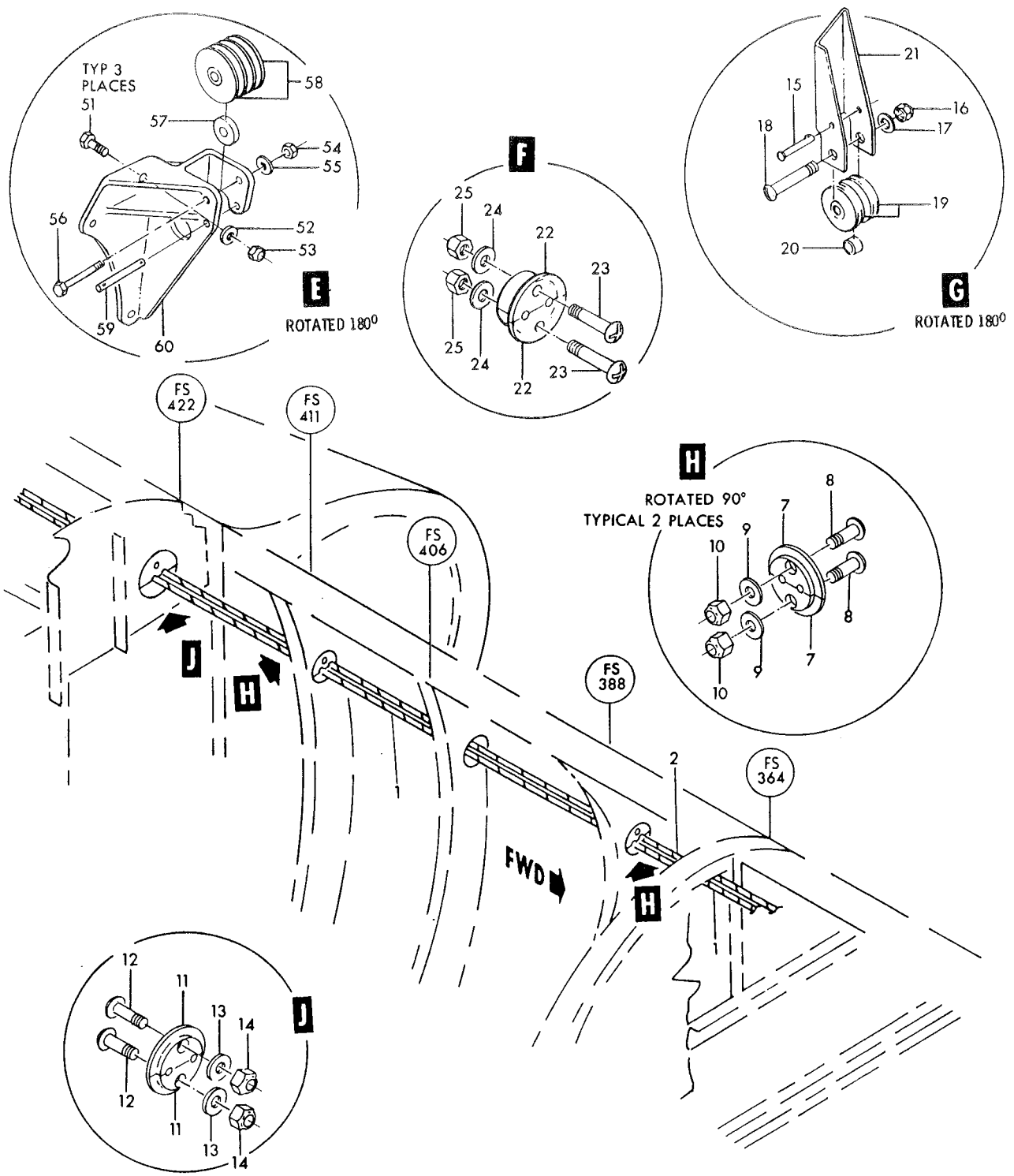

Figure 81—Throttle Control Cables and Brackets Fuselage Station 364 Aft (Sheet 2 of 2)

Figura e particolare	NDR	DENOMINAZIONE (1 2 3 4 5 6 7)	Quant.	Codice applicab.
81-36	AN960D416	WASHER (88044)	1	
-37	AN24-25	BOLT (88044)	1	
-38	MS20219A2	PULLEY (96906)	2	
	MS24665-132	COTTER PIN (96906)	2	
-39	NAS427W21	PIN (80205)	1	
	783063-5	BRACKET INSTL, RH mid fus throttle control *(see fig. 63 for reqd)*	REF	
-40	783063-17	BRACKET ASSY, RH mid fus throttle control	1	
		Attaching Parts		
-41	NAS1104-8	BOLT (80205)	3	
-42	AN960D416	WASHER (88044)	3	
-43	MS21042L4	NUT (96906)	3	
		✲		
	MS24665-132	COTTER PIN (96906)	1	
-44	AN320-4	NUT (88044)	1	
-45	AN960D416	WASHER (88044)	1	
-46	NAS1104-24D	BOLT (80205)	1	
-47	LS2326-4S0-120	BUSHING, plain (36659)	1	
-48	MS20219A2	PULLEY (96906)	2	
-49	763455	BRACKET, fuselage station 520 throttle control upper pulley	1	
-50	783063-19	BRACKET ASSY	1	
		Attaching Parts		
-51	NAS1104-8	BOLT (80205)	3	
-52	AN960D416	WASHER (88044)	3	
-53	MS21042L4	NUT (96906)	3	
		✲		
	MS24665-132	COTTER PIN (96906)	1	
-54	AN320-4	NUT (88044)	1	
-55	AN960D416	WASHER (88044)	1	
-56	NAS1104-24D	BOLT (80205)	1	
-57	LS2326-4S0-120	BUSHING, plain (36659)	1	
-58	MS20219A2	PULLEY (96906)	2	
	MS24665-132	COTTER PIN (96906)	2	
-59	NAS427W25	PIN (80205)	1	
-60	763507	BRACKET, fuselage station 520 throttle control lower pulley	1	
	783063-101	CONTROL INSTL, throttle *(see fig. 63 for reqd)*	REF	
-61	772265-101	CONTROL ASSY, aft throttle (see T.O. 16C1-4-14-3) *(see fig. 82)*	1	
		Attaching Parts		
-62	AN4-6A	BOLT (88044)	3	
-63	AN960D416	WASHER (88044)	3	
		✲		
-64	762969-3	BRACKET, pressure regulator aft support *(see fig. 113 for reqd)*	REF	

Figura e particolare	NDR	DENOMINAZIONE 1 2 3 4 5 6 7	Quant.	Codice applicab.
		AFT THROTTLE CONYROL ASSEMBLY		
82	772265-101	CONTROL ASSY, aft throttle (see T.O. 16C1-4-14-3) *(see fig. 81 for reqd)*	REF	
		Partial breakdown follows		
-1	MS24665-132	COTTER PIN (96906)	1	
-2	AN320-4	NUT (88044)	1	
-3	AN960D416	WASHER (88044)	1	
-4	NAS1104-12D	BOLT (80205)	1	
-5	MS24665-132	COTTER PIN (96906)	1	
-6	AN320-4	NUT (88044)	1	
-7	AN960D416	WASHER (88044)	1	
-7A	LS881-10	WASHER (36659) (under head)	1	
-8	NAS1104-11D	BOLT (80205)	1	
-9	MS21042L3	NUT (96906)	2	
-10	796866-1	WASHER	2	
-11	AN502-10-10	SCREW (88044)	2	
-12	NAS509-4	NUT (80205)	2	
-13	AN565D428H16	SCREW (88044)	2	
-14	MS21042L3	NUT (96906)	2	
-15	796866-1	WASHER	2	
-16	AN502-10-10	SCREW (88044)	2	
-17	MS21042L3	NUT (96906)	2	
-18	AN960D10	WASHER (88044)	2	
-19	NAS623-3-10	SCREW (80205)	2	
-20	AN960D10	WASHER (88044)	2	
-21	MS21042L3	NUT (96906)	2	
-22	AN960D10	WASHER (88044)	2	
-23	3502-10-01	WASHER, spring (30323)	2	
-24	NAS623-3-12	SCREW (80205)	2	
-25	AN960D10	WASHER (88044)	2	
-26	3502-10-01	WASHER, spring (30323)	2	
-27	AN960D10	WASHER (88044)	2	
-27A	772263-1	SPACER, laminated	2	
-28	MS21042L3	NUT (96906)	2	
-29	796866-1	WASHER	2	
-30	AN502-10-10	SCREW (88044)	2	
-31	NAS561P3-12	PIN (80205)	1	
-32	MS21042L3	NUT (96906)	2	
-33	796866-1	WASHER	2	
-34	AN502-10-18	SCREW (88044)	2	
-35	MS21042L3	NUT (96906)	2	
-36	AN960D10	WASHER (88044)	2	
-37	NAS623-3-12	SCREW (80205)	2	
-38	AN320-3	NUT (88044)	1	
-39	AN975-3	WASHER (88044)	1	
-40	AN386-1-8	PIN (88044)	1	
-41	AN201KP3A	BEARING (88044)	2	
-42	AN320-3	NUT (88044)	1	
-43	AN975-3	WASHER (88044)	1	
-44	AN386-1-8	PIN (88044)	1	
-45	MS24665-132	COTTER PIN (96906)	4	
-46	MS20392-2C29	PIN (96906)	4	
	MS24665-132	COTTER PIN (96906)	2	
-47	AN320-4	NUT (88044)	2	
-48	AN960D416	WASHER (88044)	2	
-49	NAS1104-16D	BOLT (80205)	2	
-50	NAS427T23	PIN (80205)	2	
-51	AN565D1032H12	SCREW (88044)	1	
-52	NAS679A3	NUT (80205)	1	
-53	B539DD	BEARING (21335)	1	
-54	B538DD	BEARING (21335)	1	

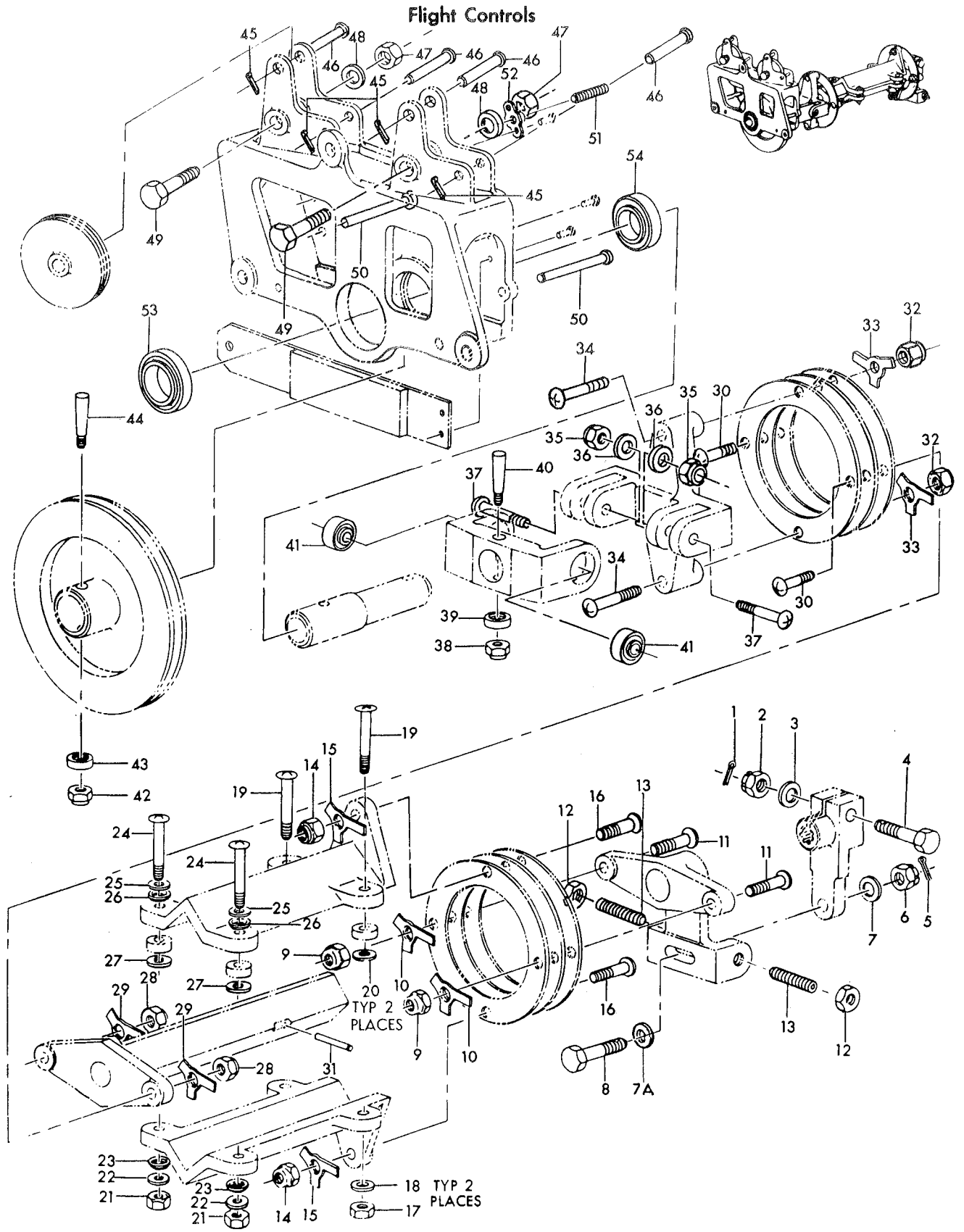

Figure 82— Aft Throttle Control Assembly

Figura e particolare	NDR	DENOMINAZIONE 1 2 3 4 5 6 7	Quant.	Codice applicab.
		FLIGHT CONTROLS PULLEY BRACKET ASSEMBLIES FUSELAGE STATIONS 209, 249 AND 258		
83	760475L	. BRACKET INSTL, fuselage station 209 flight control pulley *(see fig. 63 for reqd)*	REF	6701-6720
	760475-101	. BRACKET INSTL, fuselage station 209 flight control pulley LH *(see fig. 63 for reqd)*	REF	6721-
	760475R	. BRACKET INSTL, fuselage station 209 flight control pulley *(see fig. 63 for reqd)*	REF	6701-6720
	760475-102	. BRACKET INSTL, fuselage station 209 flight control pulley RH *(see fig. 63 for reqd)*	REF	6721-
- 1	760475-3L	. . BRACKET ASSY, fuselage station 209 flight control pulley *(see fig. 66, 72, 75 and 235)*	1	6701-6720
	760475-103	. . BRACKET ASSY, fuselage station 209 flight control pulley LH *(see fig. 66, 72, 75 and 235)*	1	6721-
	760475-3R	. . BRACKET ASSY, fuselage station 209 flight control pulley *(see fig. 66, 72, 75 and 235)*	1	6701-6720
	760475-104	. . BRACKET ASSY, fuselage station 209 flight control pulley RH *(see fig. 66, 72, 75 and 235)*	1	6721-
		Attaching Parts		
- 2	NAS1104-6	. . BOLT (80205)	1	
- 3	NAS1203-6	. . SCREW (80205)	1	
- 4	NAS623-3-8	. . SCREW (80205)	2	
- 5	NAS43-3-10	. . SPACER (80205)	2	
- 6	764404	. . RUB STRIP, fuselage station 212 control cable	1	
- 7	AN960D10	. . WASHER (88044)	5	
- 8	AN960D416	. . WASHER (88044)	1	
- 9	MS21042L3	. . NUT (96906)	3	
-10	MS21042L4	. . NUT (96906)	1	
		*		
-11	LS1001	. . . CLIP, fairlead bushing retainer (36659)	2	
-12	760476-3	. . . BUSHING, split type fairlead	4	
	MS24665-134	. . . COTTER PIN (96906)	1	
-13	AN320-5	. . . NUT (88044)	1	
-14	AN960D516	. . . WASHER (88044)	1	
-15	NAS43DD5-52	. . . SPACER (80205)	1	
-16	NAS43DD5-18	. . . SPACER (80205)	1	
-17	NAS1105-56D	. . . BOLT (80205)	1	
-18	MS20220-4	. . . PULLEY (96906)	3	
-19	MS21042L3	. . . NUT (96906)	2	
-20	AN960D10	. . . WASHER (88044)	2	
-21	NAS43DD3-62	. . . SPACER (80205)	1	
-22	NAS623-3-18	. . . SCREW (80205)	1	
-23	NAS623-3-38	. . . SCREW (80205)	1	
-24	760477	. . . GUARD, fuselage station 209 bracket pulley	1	
-25	NAS427T48	. . . PIN (80205)	1	6701-6720
	NAS427T52	. . . PIN (80205)	1	6721-
-26	760474L	. . . BRACKET, fuselage station 209 flight control pulley	1	
	760474R	. . . BRACKET, fuselage station 209 flight control pulley	1	
	760355L	. BRACKET INSTL, fuselage station 249 flight controls pulley *(see fig. 63 for reqd)*	REF	6701-6765
	760355-101	. BRACKET INSTL, fuselage station 249 flight controls pulley LH *(see fig. 63 for reqd)*	REF	6766-
	760355R	. BRACKET INSTL, fuselage station 249 flight controls pulley *(see fig. 63 for reqd)*	REF	6701-6765
	760355-102	. BRACKET INSTL, fuselage station 249 flight controls pulley RH *(see fig. 63 for reqd)*	REF	6766-
-27	760355-3L	. . BRACKET ASSY, fuselage station 249 flight control pulley *(see fig. 66, 72 and 75)*	1	6701-6765
	760355-103	. . BRACKET ASSY, fuselage station 249 flight control pulley LH *(see fig. 66, 72 and 75)*	1	6766-
	760355-3R	. . BRACKET ASSY, fuselage station 249 flight control pulley *(see fig. 66 72 and 75)*	1	6701-6765
	760355-104	. . BRACKET ASSY, fuselage station 249 flight control pulley RH *(see fig. 66, 72 and 75)*	1	6766-

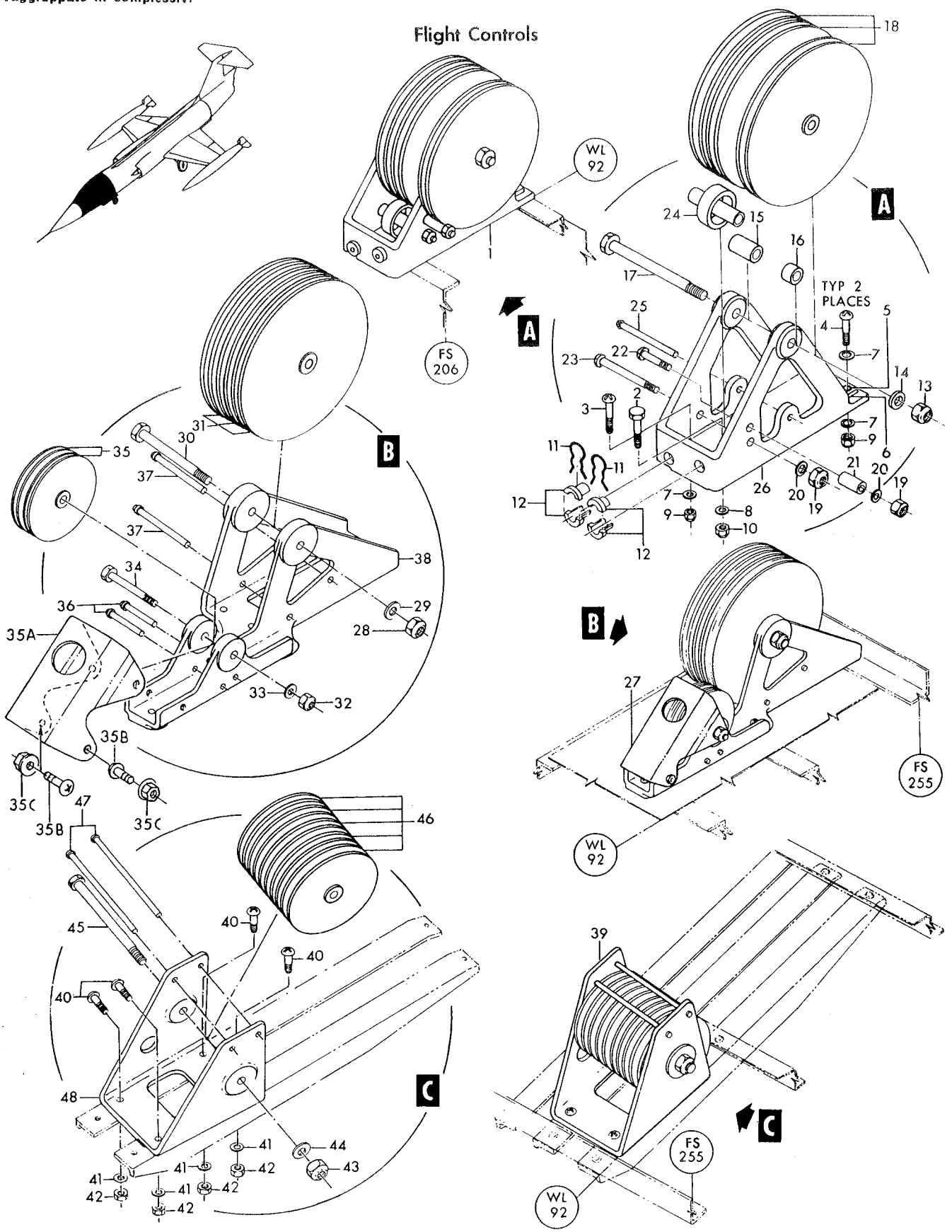

Figure 83— Flight Controls Pulley Bracket Assemblies Fuselage Stations 209, 249 and 258

Figura e particolare	NDR	1 2 3 4 5 6 7 DENOMINAZIONE	Quant.	Codice applicab.
		Attaching Parts		
83	NAS623-3-6	SCREW (80205)	6	
	AN960D10	WASHER (88044)	6	
	MS21042L3	NUT (96906)	6	
		*		
	MS24665-134	COTTER PIN (96906)	1	
-28	AN320-5	NUT (88044)	1	
-29	AN960D516	WASHER (88044)	1	
-30	AN5-30	BOLT (88044)	1	
-31	MS20220-4	PULLEY (96906)	3	
	MS24665-134	COTTER PIN (96906)	1	
-32	AN320-4	NUT (88044)	1	
-33	AN960D416	WASHER (88044)	1	
-34	AN4-20	BOLT (88044)	1	
-35	MS20219-4	PULLEY (96906)	2	
-35A	852065-101	GUARD, fus sta 249 flight control pulley	1	6766-
		Attaching Parts		
-35B	NAS623-3-3	SCREW (80205)	2	6766-
-35C	MS21042L3	NUT (96906)	2	6766-
		*		
-36	NAS427K23	PIN (80205)	2	
-37	NAS427K40	PIN (80205)	2	
-38	760354L	BRACKET, fuselage station 249 flight control pulley	1	
	760354R	BRACKET, fuselage station 249 flight control pulley	1	
	760508-3L	BRACKET INSTL, fuselage station 258 flight control pulley *(see fig. 63 for reqd)*	REF	
	760508-3R	BRACKET INSTL, fuselage station 258 flight control pulley *(see fig. 63 for reqd)*	REF	
-39	760508-5L	BRACKET ASSY, fuselage station 258 flight control pulley *(see fig. 66 72 and 75)*	1	
	760508-5R	BRACKET ASSY, fuselage station 258 flight control pulley *(see fig. 66, 72 and 75)*	1	
		Attaching Parts		
-40	NAS623-3-6	SCREW (80205)	4	
-41	AN960D10	WASHER (88044)	4	
-42	MS21042L3	NUT (96906)	4	
		*		
	MS24665-134	COTTER PIN (96906)	1	
-43	AN320-5	NUT (88044)	1	
-44	AN960D516	WASHER (88044)	1	
-45	AN5-40	BOLT (88044)	1	
-46	MS20220-3	PULLEY (96906)	5	
-47	NAS427K58	PIN (80205)	2	
-48	760507L	BRACKET, fuselage station 258 flight control pulley	1	
	760507R	BRACKET, fuselage station 258 flight control pulley	1	

Figura e particolare	NDR	DENOMINAZIONE	Quant.	Codice applicab.
		FLIGHT CONTROLS TUNNEL AND BELLCRANK ASSEMBLIES FUSELAGE STATION 335		
84	771539-105	. TUNNEL INSTL, fuselage station 335 flight controls bellcranck LH *(see fig. 30 for reqd)*	REF	
	771540-101	. . TUNNEL ASSY, LH fuselage station 335 flight controls bellcrank *(see fig. 66 and 72)*	1	
		Attaching Parts		
- 1	AN520-10R10	. . SCREW (88044)	1	
- 2	AN4-5A	. . BOLT (88044)	1	
- 3	AN4-6A	. . BOLT (88044)	2	
- 4	AN4-10A	. . BOLT (88044)	2	
- 5	771539-5	. . SHIM	AR	
- 6	AN960D10	. . WASHER (88044)	1	
- 7	AN960D416	. . WASHER (88044)	5	
- 8	MS21042L4	. . NUT (96906)	5	
	MS24665-132	. . . COTTER PIN (96906)	8	
	MS24665-134	. . . COTTER PIN (96906)	2	
- 9	AN320-3	. . . NUT (88044)	10	
-11	AN960D10	. . . WASHER (88044)	8	
-12	AN23-13	. . . BOLT (88044)	8	
-13	AN23-12	. . . BOLT (88044)	2	
	760338-10	. . . CABLE ASSY, fuselage station 335 flight control bellcranks link	1	
	760338-9	. . . CABLE ASSY, fuselage station 335 flight control bellcranks link	1	
	760338-8	. . . CABLE ASSY, fuselage station 335 flight control bellcranks link	1	
	760338-7	. . . CABLE ASSY, fuselage station 335 flight control bellcranks link	1	
	760338-6	. . . CABLE ASSY, fuselage station 335 flight control bellcranks link	1	
-15	760338-12	. . . . CABLE (reqd on 760338-10)	1	
-16	760338-4	. . . . CABLE (reqd on 760338-9)	1	
-17	760338-3	. . . . CABLE (reqd on 760338-8)	1	
-18	760338-11	. . . . CABLE (reqd on 760338-7)	1	
-19	760338-5	. . . . CABLE (reqd on 760338-6)	1	
-20	LCB125	. . . . CABLE END (83548)	2	
-21	MS21042L3	. . . NUT (96906)	2	
-22	NAS623-3-4	. . . SCREW (80205)	2	
-23	765979-1	. . . RETAINER, fuselage station 355 bellcrank bolt	1	
-24	726080-101	. . . BOLT, bellcrank fulcrum	1	
-24A	LS1588-3	. . . WASHER (36659)	1	
-25	6800-080	. . . RETAINER, bolt (80539)	1	
-26	NAS1022A8	. . . NUT (80205)	1	
	726145-5	. . . SHIM, washer	AR	
	MS24665-285	. . . COTTER PIN (96906)	1	
-27	AN320-8	. . . NUT (88044)	1	
-28	AN960D816	. . . WASHER (88044)	3	
-29	NAS338CP27	. . . SCREW (80205)	1	
	726145-5	. . . SHIM, washer	AR	
	760332-6	. . . BELLCRANK ASSY, fuselage station 335 large straight flight controls	2	
	760333-6	. . . BELLCRANK ASSY, fuselage station 335 intermediate straight flight controls	2	
	760334	. . . BELLCRANK ASSY, fuselage station 335 small straight flight controls	1	
-30	760332-3	. . . . BELLCRANK (reqd on 760332-6)	1	
-31	760333-3	. . . . BELLCRANK (reqd on 760333-6)	1	
-32	760334-3	. . . . BELLCRANK (reqd on 760334)	1	
-33	AN201KP8A	. . . . BEARING (88044)	2	
	MS24665-285	. . . COTTER PIN (96906)	1	
-34	AN320-8	. . . NUT (88044)	1	
-35	AN960D816	. . . WASHER (88044)	2	
-36	NAS1108-86D	. . . BOLT (80205)	1	
	726145-5	. . . SHIM, washer	AR	
-37	NAS43DD8-24	. . . SPACER (80205)	1	

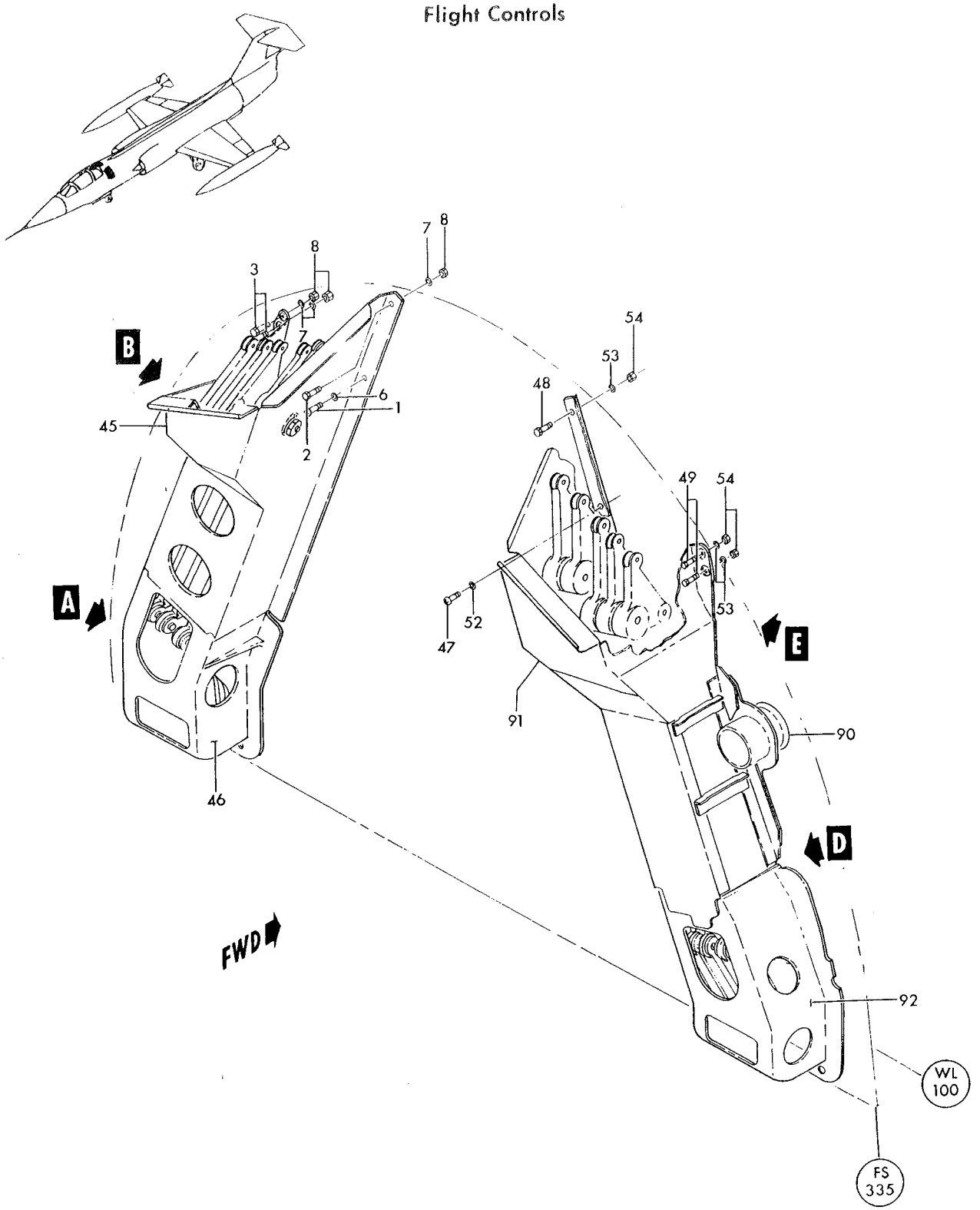

Figure 84— Flight Controls Tunnel and Bellcrank Assemblies Fuselage Station 335 (Sheet 1 of 3)

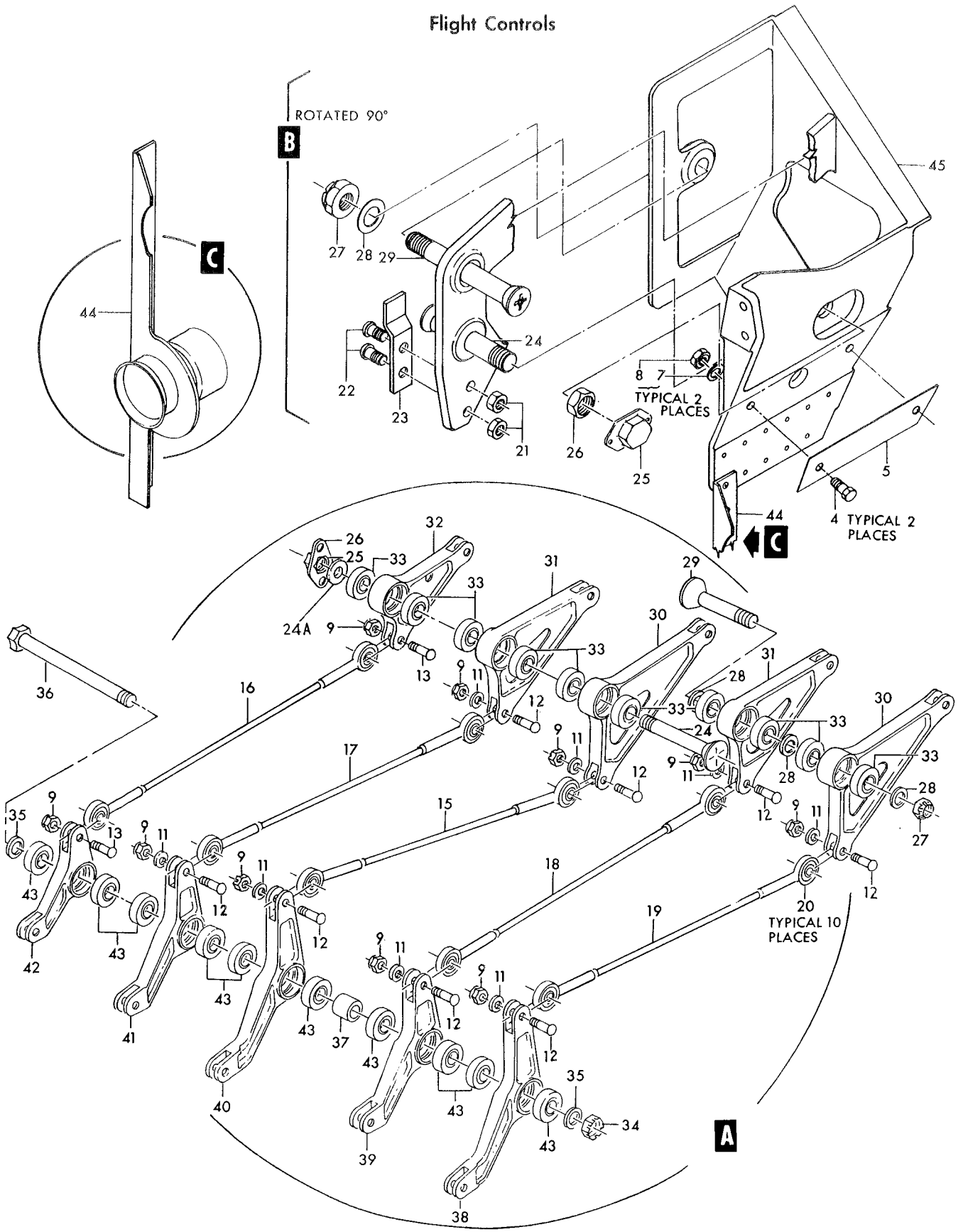

Figure 84— Flight Controls Tunnel and Bellcrank Assemblies Fuselage Station 335 (Sheet 2 of 3)

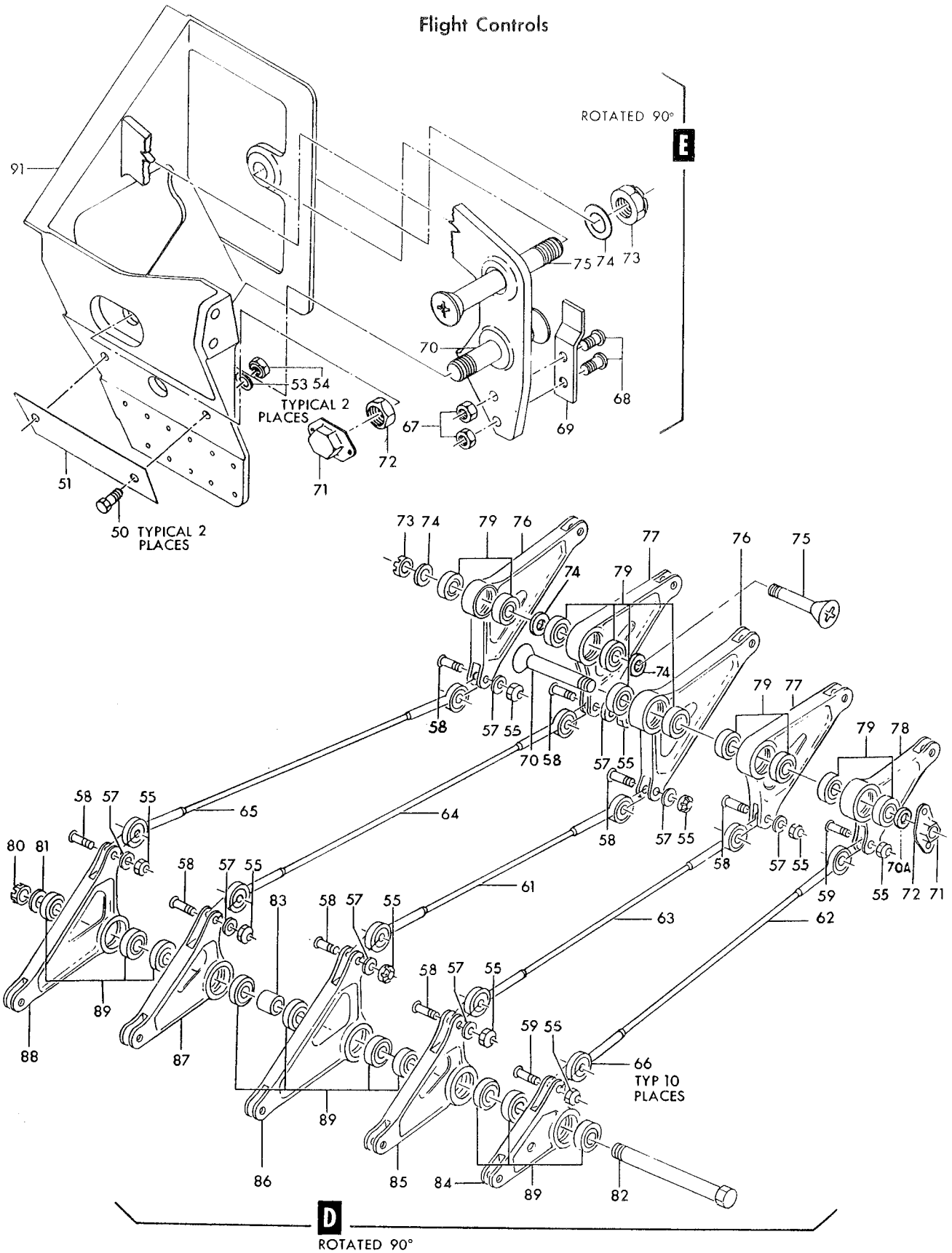

Figure 84— Flight Controls Tunnel and Bellcrank Assemblies Fuselage Station 335 (Sheet 3 of 3)

Figura e particolare	NDR	DENOMINAZIONE	Quant.	Codice applicab.
84	760335-5	BELLCRANK ASSY, fuselage station 335 large offset flight controls	1	
	760336-5	BELLCRANK ASSY, fuselage station 335 intermediate offset flight controls	1	
	760335-6	BELLCRANK ASSY, fuselage station 335 large offset flight controls	1	
	760336-6	BELLCRANK ASSY, fuselage station 335 intermediate offset flight controls	1	
	760337	BELLCRANK ASSY, fuselage station 335 small offset flight controls	1	
-38	760335-3	BELLCRANK (reqd on 760335-5)	1	
-39	760336-3	BELLCRANK (reqd on 760336-5)	1	
-40	760335-4	BELLCRANK (reqd on 760335-6)	1	
-41	760336-4	BELLCRANK (reqd on 760336-6)	1	
-42	760337-3	BELLCRANK (reqd on 760337)	1	
-43	AN201KP8A	BEARING (88044)	2	
	771541-501	HOUSING ASSY, LH fuselage station 335 flight control bellcrank	1	
-44	786034-1	SUPPORT ASSY, flight control bellcrank housing	1	
-45	771542-1	HOUSING, LH upper fuselage station 335 flight controls bellcrank	1	
-46	771543-1	HOUSING, LH lower fuselage station 335 flight controls bellcrank	1	
	771539-103	TUNNEL INSTL, fuselage station 335 flight controls bellcrank RH *(see fig. 30 for reqd)*	REF	
	771551-103	TUNNEL ASSY, RH fuselage station 335 flight controls bellcrank *(see fig. 66 and 72)*	1	
		Attaching Parts		
-47	AN520-10R10	SCREW (88044)	1	
-48	AN4-5A	BOLT (88044)	1	
-49	AN4-6A	BOLT (88044)	2	
-50	AN4-10A	BOLT (88044)	2	
-51	771539-5	SHIM	AR	
-52	AN960D10	WASHER (88044)	1	
-53	AN960D416	WASHER (88044)	5	
-54	MS21042L4	NUT (96906)	5	
		*		
	MS24665-132	COTTER PIN (96906)	8	
	MS24665-134	COTTER PIN (96906)	2	
-55	AN320-3	NUT (88044)	10	
-57	AN960D10	WASHER (88044)	8	
-58	AN23-13	BOLT (88044)	8	
-59	AN23-12	BOLT (88044)	2	
	760338-10	CABLE ASSY, fuselage station 335 flight control bellcranks link	1	
	760338-9	CABLE ASSY, fuselage station 335 flight control bellcranks link	1	
	760338-8	CABLE ASSY, fuselage station 335 flight control bellcranks link	1	
	760338-7	CABLE ASSY, fuselage station 335 flight control bellcranks link	1	
	760338-6	CABLE ASSY, fuselage station 335 flight control bellcranks link	1	
-61	760338-12	CABLE (reqd on 760338-10)	1	
-62	760338-4	CABLE (reqd on 760338-9)	1	
-63	760338-3	CABLE (reqd on 760338-8)	1	
-64	760338-11	CABLE (reqd on 760338-7)	1	
-65	760338-5	CABLE (reqd on 760338-6)	1	
-66	LCB125	CABLE END (83548)	2	
-67	MS21042L3	NUT (96906)	2	
-68	NAS623-3-4	SCREW (80205)	2	
-69	765979-1	RETAINER, fuselage station 355 bellcrank fulcrum	1	
-70	726080-101	BOLT, bellcrank fulcrum	1	
-70A	LS1588-3	WASHER (36659)	1	
-71	6800-080	RETAINER, bolt (80539)	1	
-72	NAS1022A8	NUT (80205)	1	
	726145-5	SHIM, washer	AR	
	MS24665-285	COTTER PIN (96906)	1	
-73	AN320-8	NUT (88044)	1	
-74	AN960D816	WASHER (88044)	3	
-75	NAS338CP27	SCREW (80205)	1	

Figura e particolare	NDR	1 2 3 4 5 6 7 DENOMINAZIONE	Quant.	Codice applicab.
84	726145-5	SHIM, washer	AR	
	760332-6	BELLCRANK ASSY, fuselage station 335 large straight flight controls	2	
	760333-6	BELLCRANK ASSY, fuselage station 335 intermediate straight flight controls	2	
	760334	BELLCRANK ASSY, fuselage station 335 small straight flight controls	1	
-76	760332-3	. BELLCRANK (reqd on 760332-6)	1	
-77	760333-3	. BELLCRANK (reqd on 760333-6)	1	
-78	760334-3	. BELLCRANK (reqd on 760334)	1	
-79	AN201KP8A	. BEARING (88044)	2	
	MS24665-285	COTTER PIN (96906)	1	
-80	AN320-8	NUT (88044)	1	
-81	AN960D816	WASHER (88044)	1	
-82	NAS1108-82D	BOLT (80205)	1	
	726145-5	SHIM, washer	AR	
-83	NAS43DD8-24	SPACER (80205)	1	
	760334	BELLCRANK ASSY, fuselage station 335 small straight flight controls	1	
	760333-8	BELLCRANK ASSY, fuselage station 335 intermediate straight flight controls	1	
	760332-7	BELLCRANK ASSY, fuselage station 335 large straight flight controls	1	
	760333-7	BELLCRANK ASSY, fuselage station 335 intermediate straight flight controls	1	
	760332-8	BELLCRANK ASSY, fuselage station 335 large straight flight controls	1	
-84	760334-3	. BELLCRANK (reqd on 760334)	1	
-85	760333-5	. BELLCRANK (reqd on 760333-8)	1	
-86	760332-4	. BELLCRANK (reqd on 760332-7)	1	
-87	760333-4	. BELLCRANK (reqd on 760333-7)	1	
-88	760332-5	. BELLCRANK (reqd on 760332-8)	1	
-89	AN201KP8A	. BEARING (88044)	2	
	771552-503	HOUSING ASSY, RH fuselage station 335 flight controls bellcrank	1	
-90	786033-1	. FLANGE ASSY, RH fuselage station 335 control tunnel	1	
-91	771553-1	. HOUSING, upper RH fuselage station 335 flight controls bellcrank	1	
-92	795704-1	. HOUSING, lower RH fuselage station 335 flight controls bellcrank	1	

Figura e particolare	NDR	1 2 3 4 5 6 7 DENOMINAZIONE	Quant.	Codice applicab.
		NOSE AND MAIN LANDING GEAR EMERGENCY RELEASE FUSELAGE STATION 206 TO 279		
85	781628-5	BRACKET INSTL, fuselage station 206 manual LG release *(see fig. 63 for reqd)*	REF	
- 1	NAS561P3-8	PIN (80205)	1	
- 2	781628-3	HANDLE ASSY	1	
- 3	726336-3	HANDLE, manual landing gear release *(see fig. 222)*	1	
- 4	726304-3	ADAPTER, emergency release handle	1	
- 5	176663	WASHER, control handle	1	
- 6	726303-3	GUIDE, emergency release handle	1	
- 7	AN936A516	WASHER (88044)	1	
- 8	762865	ADAPTER, emergency LG release bracket	1	
- 9	762968-77	TUBE ASSY, LG release	1	
-10	MS21042L3	NUT (96906)	1	
-11	NAS623-3-10	SCREW (80205)	1	
-12	M1B	PULLEY, control (83451)	1	
-13	725442	BRACKET, release	2	
	763559-101	CLAMP INSTL, fuselage station 206, 232 and 237 manual release tube *(see fig. 63 for reqd)*	REF	
-15	AN742D4	CLAMP (88044)	1	
		Attaching Parts		
	AN520-10R16	SCREW (88044)	1	
	LS607-12	SPACER, bolt (36659)	1	
	AN960D10	WASHER (88044)	1	
	MS21042L3	NUT (96906)	1	
-15A	794-4R	CLAMP, lug type cushioned one hole loop (83930)	2	6701-6765
-16	794-4	CLAMP, lug type cushioned one hole loop (83930)	2	6701-6765
-16A	MS21919WDG3	CLAMP (96906)	4	6766-
-16B	AN743B12	BRACKET (88044)	4	6766-
		Attaching Parts		
	AN515-8R8	SCREW (88044)	1	
	MS21042L08	NUT (96906)	1	
	763559-7	CLAMP INSTL,fuselage station 212 manual release tube *(see fig. 63 for reqd)*	REF	
-17	794-4	CLAMP, lug type cushioned one hole loop (00502)	1	
		Attaching Parts		
	AN515-8R8	SCREW (88044)	1	
	MS21042L08	NUT (96906)	1	
	783162-501	CONTROL INSTL, LH fwd manual release systems *(see fig. 63 for reqd)*	REF	
-18	772093-89	CABLE ASSY, LG manual release	1	
	MS20664C2	TERMINAL (96906)	2	
-19	RA2258-2	TERMINAL, quick disconnect (80097)	1	
-20	772093-33	CABLE ASSY, LG manual release	1	
	MS20664C2	TERMINAL (96906)	1	
	AN669S2RH	TERMINAL (88044)	1	
-21	MS21251B2S	BODY, turnbuckle (96906)	1	
-22	772093-45	CABLE ASSY, LG manual release *(see fig. 86 for reqd)*	REF	
-23	762968-5	TUBE ASSY, LG emergency release	1	
-24	762968-6	TUBE ASSY, LG emergency release	1	
-25	762968-8	TUBE ASSY, LG emergency release	1	
-25A	762968-7	TUBE ASSY, drag chute release *(see fig. 90 for reqd)*	REF	
	763011	BRACKET INSTL, fuselage station 206 lg emergency release *(see fig. 63 for reqd)*	REF	
-26	MS21042L3	NUT (96906)	1	
-27	AN960D10	WASHER (88044)	1	
-28	LS607-8	SPACER, phenolic (36659)	1	
-29	NAS623-3-16	SCREW (80205)	1	
-30	M1B	PULLEY (83451)	1	
-31	725442	BRACKET, release	2	
-32	763010	BRACKET, upper fuselage station 206 LG emergency release	1	

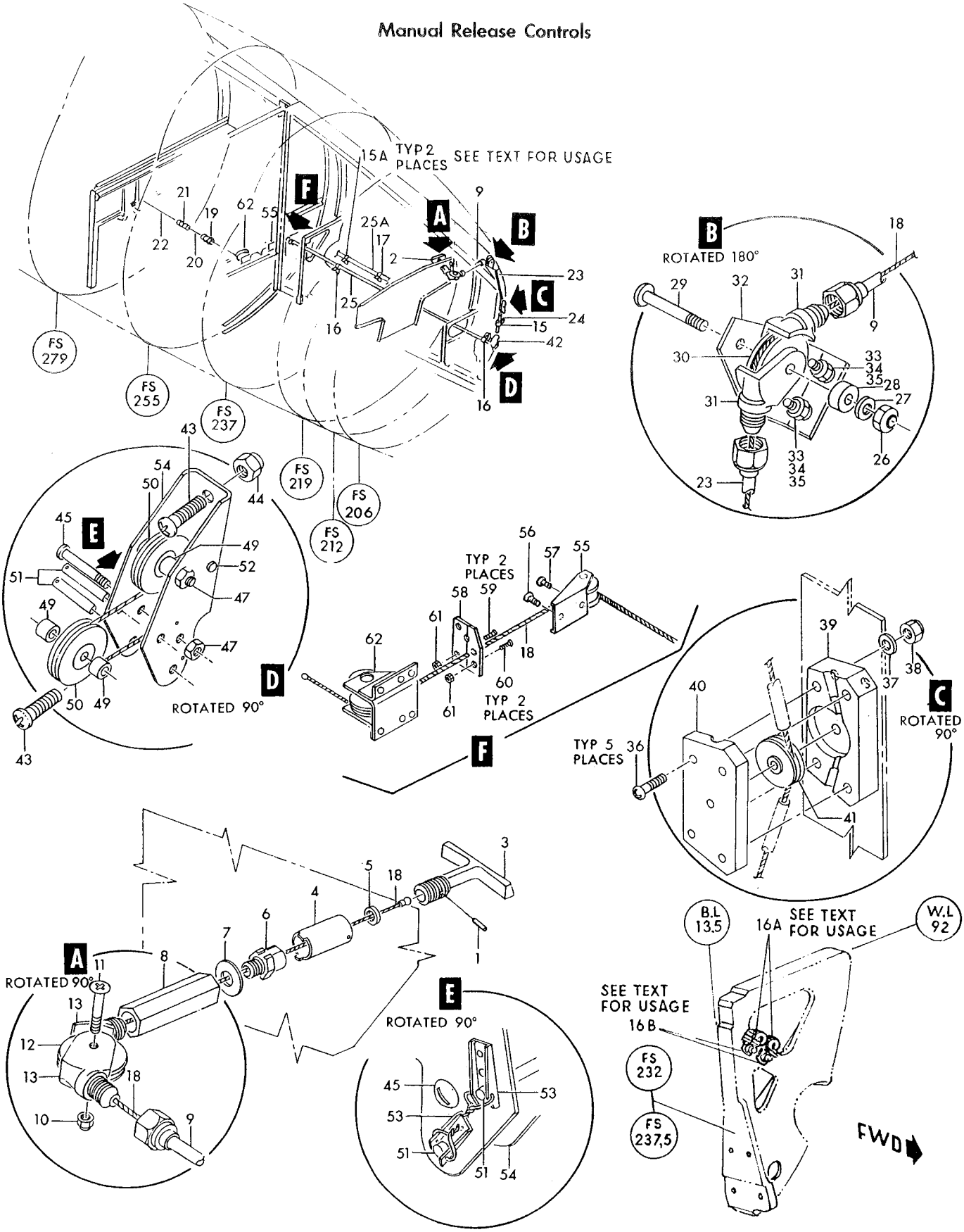

Figure 85— Nose and Main Landing Gear Emergency Release Fuselage Station 206 to 279

Figura e particolare	NDR	1	2	3	4	5	6	7	DENOMINAZIONE	Quant.	Codice applicab.
									Attaching Parts		
85-33	NAS623-3-2								SCREW (80205)	2	
-34	AN960D10								WASHER (88044)	2	
-35	MS21042L3								NUT (96906)	2	
									*		
	764298								CABLE SEAL, fuselage station 206 LG emergency release	1	
									Attaching Parts		
-36	NAS623-3-12								SCREW (80205)	5	
-37	AN960D10								WASHER (88044)	5	
-38	MS21042L3								NUT (96906)	5	
									*		
-39	764298-3								SEAL (match comp do not stk sep)	1	
-40	764298-4								SEAL (match comp do not stk sep)	1	
-41	FL3C3								BEARING, fairlead (21335)	1	
	762899								BRACKET INSTL, fuselage station 206 lower LG emergency release *(see fig. 36 for reqd)*	REF	
-42	762899-3								BRACKET ASSY, fuselage station 206 lower LG emergency release	1	
									Attaching Parts		
-43	MS27039-1-09								SCREW (96906)	2	
-44	MS21042L3								NUT (96906)	1	
									*		
-45	AN23-17A								BOLT (88044)	2	
-47	NAS680A3								NUT (80205)	2	
-49	NAS43DD3-14								SPACER (80205)	4	
-50	M1B								PULLEY (83451)	2	
-51	NAS427W15								PIN (80205)	2	
-52	NAS427K14								PIN (80205)	1	
-53	764296								CLIP, blind guard pin	2	
-54	762900								BRACKET, lower fuselage station 206 LG emergency release	1	
	785339-1								BRACKET INSTL, fuselage station 255 LG and drag chute manual release *(see fig. 63 for reqd)*	REF	
-55	762675								BRACKET ASSY, fuselage station 255 LG and drag chute emergency release *(see fig. 91)*	1	
									Attaching Parts		
-56	NAS623-3-4								SCREW (80205)	1	
-57	NAS623-3-5								SCREW (80205)	1	
									*		
-58	785338-5								FAIRLEAD ASSY, fuselage station 255 manual LG and drag chute release	1	
									Attaching Parts		
-59	AN520-10R10								SCREW (88044)	2	
-60	AN520-10R12								SCREW (88044)	2	
-61	MS21042L3								NUT (96906)	4	
									*		
	785338-1								FAIRLEAD, fuselage station 255 manual LG and drag chute release (match comp do not stk sep)	1	
	785338-3								FAIRLEAD, fuselage station 255 manual LG and drag chute release (match comp do not stk sep)	1	
-62	768607-1								BRACKET ASSY, fuselage station 255 LG and drag chute manual release *(see fig. 91)*	1	
									Attaching Parts		
	NAS623-3-2								SCREW (80205)	6	
									*		

Figura e particolare	NDR	DENOMINAZIONE 1 2 3 4 5 6 7	Quant.	Codice applicab.
		NOSE AND MAIN LANDING GEAR EMERGENCY RELEASE BELLCRANK ASSEMBLY		
86	762679	. BRACKET INSTL, fuselage station 279 emergency landing gear release and drag chute *(see fig. 63 for reqd)*	REF	
-1	762679-5	. . BRACKET ASSY, fuselage station 279 emergency landing gear release and drag chute	1	
		Attaching Parts		
-2	AN42B6A	. . BOLT (88044)	1	
-3	NAS623-3-6	. . SCREW (80205)	1	
-4	AN960D10	. . WASHER (88044)	2	
-5	MS21042L3	. . NUT (96906)	2	
-6	762682	. . . BRACKET fuselage station 279 emergency landing gear release	1	
-7	MS21042L4	. . . NUT (96906)	1	
-8	AN960D416	. . . WASHER (88044)	1	
-9	AN4-15A	. . . BOLT (88044)	1	
-10	NAS427K16	. . . PIN (80205)	2	
-11	LS6095-3	. . . GUARD, pulley (36659)	1	
-12	MS20219-4	. . . PULLEY (96906)	1	
-13	762679-4	. . BELLCRANK ASSY, fuselage station 279 emergency landing gear release	1	
-14	762706	. . . BELLCRANK ASSY, fuselage station 279 emergency landing gear release	1	
-15	AN201KP6A	. . . . BEARING (88044)	2	
-16	NAS427K13	. . . . PIN (80205)	1	
-17	MS21042L4	. . . NUT (96906)	1	
-18	AN960D416	. . . WASHER (88044)	1	
-19	NAS1104-16	. . . BOLT (80205)	1	
-20	MS20219-2	. . . PULLEY (96906)	1	
	MS24665-134	. . COTTER PIN (96906)	2	
-21	AN320-3	. . NUT (88044)	2	
-22	AN960-10	. . WASHER (88044)	2	
-23	AN23-11	. . BOLT, clevis (88044)	1	
-24	AN23-10	. . BOLT, clevis (88044)	1	
-25	MS21042L5	. . NUT (96906)	2	
-26	AN960D516	. . WASHER (88044)	2	
-27	762708	. . STUD, emergency landing gear release bellcrank	2	
-27A	769758-1	. . BRACKET, support emergency landing gear release bellcrank	1	
-28	769759-1	. . SUPPORT, LH emergency landing gear release bellcrank	1	
-29	769760-1	. . SUPPORT, RH emergency landing gear release bellcrank	1	
		Attaching Parts		
-30	NAS623-3-4	. . SCREW (80205)	2	
-31	NAS623-3-3	. . SCREW (80205)	3	
-32	AN960D10	. . WASHER (88044)	4	
-32A	MS21042L3	. . NUT (96906)	5	
-33	762680	. . BRACKET ASSY, fuselage station 279 emergency landing gear release	1	
		Attaching Parts		
-34	NAS623-3-3	. . SCREW (80205)	4	
	AN960D10	. . WASHER (88044)	4	
	MS21042L3	. . NUT (80205)	4	
-35	762680-6	. . . BRACKET ASSY, emergency landing gear release	1	
-36	MS21042L3	. . . NUT (96906)	1	
-37	AN960D10	. . . WASHER (88044)	1	
-38	NAS221-13	. . . SCREW (80205)	1	
-39	NAS427K6	. . . PIN (80205)	1	
-40	M1B	. . . PULLEY, control (83451)	1	
-41	765129-1	. . LINK ASSY, fuselage station 279 NLG manual release	1	
-42	726921-1	. . . CLEVIS, fuselage station 279 NLG manual release	1	
-43	AN345-10	. . . NUT (88044)	1	

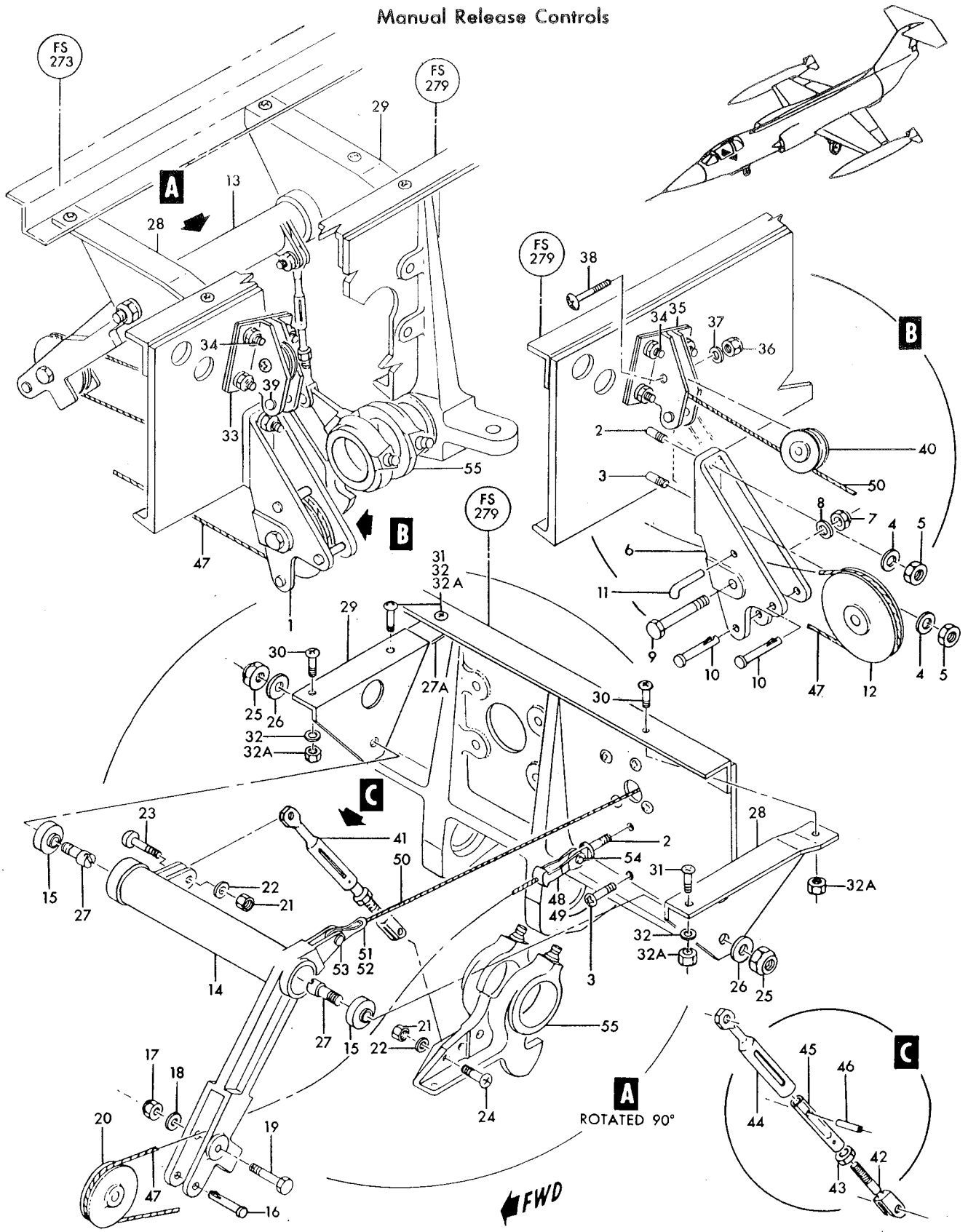

Figure 86—Nose and Main Landing Gear Emergency Release Bellcrank Assembly

Figura e particolare	NDR	DENOMINAZIONE 1 2 3 4 5 6 7	Quant.	Codice applicab.
86-44	765127-1	SLEEVE, fuselage station 279 NLG manual release	1	
-45	765128-1	SLIDE fuselage station 279 NLG manual release	1	
-46	NAS561P4-10	PIN (80205)	1	
	783162-501	CONTROL INSTL, LH fwd manual release systems *(see fig. 63 for reqd)*	REF	
-47	772093-45	CABLE ASSY, landing gear manual release *(see fig. 85)*	1	
-48	MS20664C2	TERMINAL (96906)	1	
-49	RA2500-2	TERMINAL (80097)	1	
-50	772093-73	CABLE ASSY, landing gear manual release *(see fig. 87)*	1	
-51	MS20664C3	TERMINAL (96906)	1	
-52	RA2482-3	TERMINAL (80097)	1	
	MS24665-132	COTTER PIN (96906)	2	
	AN960D10	WASHER (88044)	2	
-53	MS20392-2C13	PIN (96906)	1	
-54	MS20392-2C11	PIN (96906)	1	
-55	772941-1	HOOK ASSY, NLG uplock *(see fig. 236 for reqd)*	REF	

Figura e particolare	NDR	1 2 3 4 5 6 7 DENOMINAZIONE	Quant.	Codice applicab.
		MAIN LANDING GEAR EMERGENCY RELEASE FUSELAGE STATION 279 TO 422		
87	783162-501	. CONTROL INSTL, LH fwd manual release systems *(see fig. 63 for reqd)* .	REF	
- 1	772093-73	. . CABLE ASSY, LG manual release *(see fig. 86 for reqd)*	REF	
- 2	NAS650L3RH	. . . TERMINAL (80205)	1	
- 3	MS21251B3L	. . BARREL (96906)	1	
- 4	772093-113	. . CABLE ASSY, LG manual release	1	
- 5	AN669L3LH	. . . TERMINAL (88044)	1	
- 6	MS20664C3	. . . TERMINAL (96906)	1	
- 7	RA2258-3	. . TERMINAL, disconnect (80097)	1	
	783162-505	. CONTROL INSTL, fuselage station 184 to 358 LH manual release systems *(see fig. 63 for reqd)*	REF	
- 8	769551-1	. . CABLE ASSY, LG manual release	1	
- 9	MS20663C3	. . . TERMINAL (96906)	1	
	MS24665-132	. . COTTER PIN (96906)	1	
	AN960D10	. . WASHER (88044)	1	
-10	MS20392-2C11	. . PIN (96906)	1	
-11	RA2500-3	. . STRAP, terminal (80097)	1	
-12	MS20664C3	. . TERMINAL (96906)	1	
	783162-101	. CONTROL INSTL, LH fuselage station 358 to 614 manual release systems *(see fig. 63 for reqd)*	REF	
-13	762968-51	. . TUBE ASSY, manual LG drag chute release *(see fig. 92)*	2	
	783112-7	. BRACKET INSTL, fuselage station 305 to 335 LG and drag chute manual release *(see fig. 63 for reqd)*	REF	
-14	768625-1	. . BRACKET ASSY, fuselage station 305 LG manual release	1	
		Attaching Parts		
-15	NAS623-3-5	. . SCREW (80205)	2	
-16	AN960D10	. . WASHER (88044)	2	
-17	MS21042L3	. . NUT (96906)	2	
		———————*———————		
-18	MS21042L3	. . . NUT (96906)	1	
-19	AN960D10	. . . WASHER (88044)	1	
-20	NAS623-3-5	. . . SCREW (80205)	1	
-21	M1B	. . . PULLEY, control (83451)	1	
-22	NAS427K13	. . . PIN (80205)	1	
-23	768624-1	. . . BRACKET, fuselage station 305 LG manual release	1	
	783112-1	. BRACKET INSTL, fuselage station 305 to 335 LG and drag chute manual release *(see fig. 63 for reqd)*	REF	
-24	775755-1	. . BRACKET ASSY, fuselage station 335 drag chute and LG manual release *(see fig. 91)*	1	
		Attaching Parts		
-25	NAS623-3-4	. . SCREW (80205)	4	
-26	AN960D10	. . WASHER (88044)	4	
-27	MS21042L3	. . NUT (96906)	4	
		———————*———————		
-28	MS21042L3	. . . NUT (96906)	1	
-29	AN960D10	. . . WASHER (88044)	2	
-30	NAS623-3-20	. . . SCREW (80205)	1	
-31	NAS43DD3-20	. . . SPACER (80205)	1	
-32	M1B	. . . PULLEY, control (83451)	2	
-33	NAS427K20	. . . PIN (80205)	2	
-34	775755-3	. . . BRACKET ASSY, fuselage station 335 drag chute and LG manual release	1	
-35	MS21042L3	. . NUT (96906)	1	
-36	AN960D10	. . WASHER (88044)	1	
-37	NAS623-3-22	. . SCREW (80205)	1	
-38	M1B	. . PULLEY, control (83451) *(see fig. 91)*	2	
-39	NAS43DD3-20	. . SPACER (80205)	1	
-40	NAS43DD3-12	. . SPACER (80205)	1	
-41	NAS427K21	. . PIN (80205)	2	
	784567-1	. CLAMPBLOCK INSTL, fuselage station 335 manual release cable tube *(see fig. 63 for reqd)*	REF	

Manual Release Controls

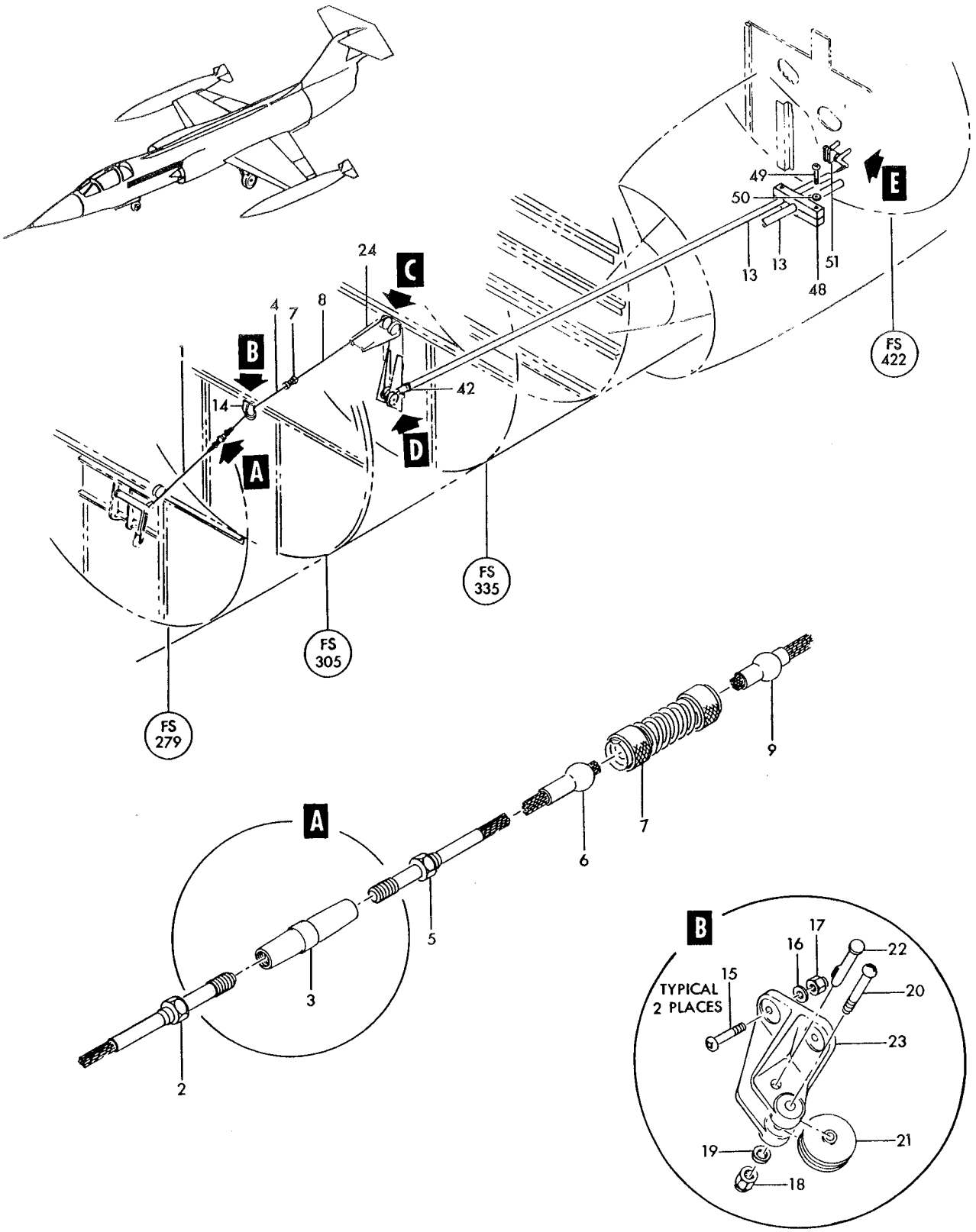

Figure 87—Main Landing Gear Emergency Release Fuselage Station 279 to 422 (Sheet 1 of 2)

Manual Release Controls

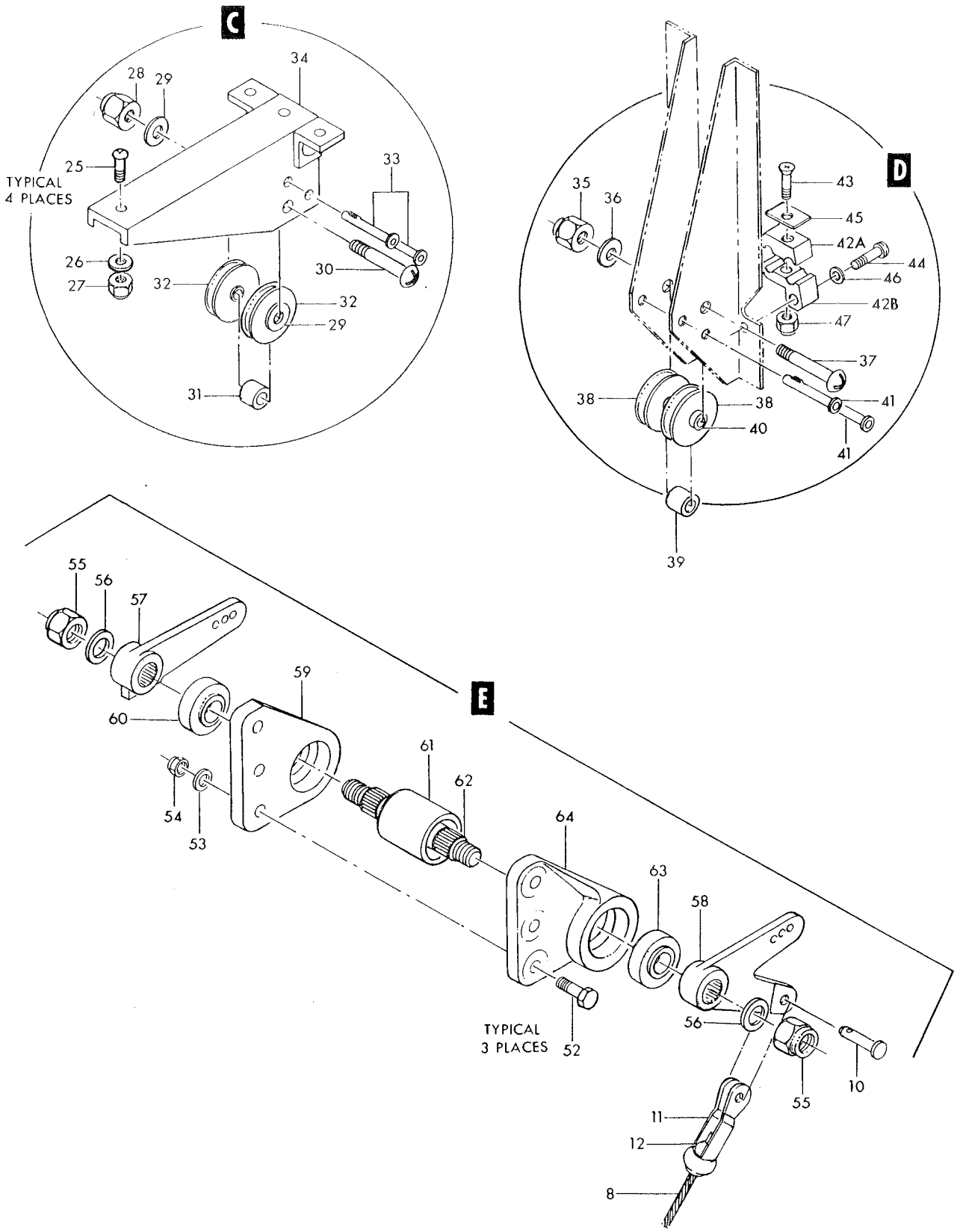

Figure 87—Main Landing Gear Emergency Release Fuselage Station 279 to 422 (Sheet 2 of 2)

Figura e particolare	NDR	1 2 3 4 5 6 7 DENOMINAZIONE	Quant.	Codice applicab.
87-42	784566-1	CLAMPBLOCK ASSY, fuselage station 335 manual release cable tube *(see fig. 91)*	1	
-42A	784566-3	BLOCK, manual release cable tube (match comp do not stk sep)	1	
-42B	784566-5	BLOCK, manual release cable tube (match comp do not stk sep)	1	
		Attaching Parts		
-43	NAS517-3-13	SCREW (80205)	1	
-44	NAS623-3-12	SCREW (80205)	1	
-45	784567-3	SHIM	AR	
-46	AN960D10	WASHER (88044)	1	
-47	MS21042L3	NUT (96906)	1	
	783343-1	BRACKET INSTL, fuselage station 422 LG and drag chute manual release *(see fig. 31 for reqd)*	REF	
-48	768951-1	FAIRLEAD ASSY, fuselage station 422 LG manual release *(see fig. 92)*	1	
		Attaching Parts		
-49	NAS623-3-14	SCREW (80205)	2	
-50	AN960D10	NUT (88044)	2	
-51	768942-1	BELLCRANK ASSY, fuselage station 422 LG manual release *(see fig. 88)*	1	
		Attaching Parts		
-52	AN4-12A	BOLT (88044)	3	
-53	AN960D416	WASHER (88044)	3	
-54	MS21042L4	NUT (96906)	3	
-55	MS21042L6	NUT (96906)	2	
-56	AN960-616	WASHER (88044)	2	
-57	765069-4	ARM, fuselage station 422 LG manual release bellcrank	1	
-58	768944-3	BELLCRANK, fuselage station 422 LG manual release	1	
-59	768943-2	SUPPORT, fuselage station 422 LG manual release	1	
-60	AN201KP8A	BEARING (88044)	1	
-61	763397	SLEEVE, fuselage station 422 LG manual release bellcrank	1	
-62	763395	SHAFT, fuselage station 422 LG manual release bellcrank	1	
	768942-3	SUPPORT ASSY	1	
-63	AN201KP8A	BEARING (88044)	1	
-64	768943-1	SUPPORT, fuselage station 422 LG manual release	1	

Figura e particolare	NDR	DENOMINAZIONE 1 2 3 4 5 6 7	Quant.	Codice applicab.
		MAIN LANDING GEAR EMERGENCY RELEASE FUSELAGE STATION 422 TO 473		
88	783162-101	. CONTROL INSTL, LH fuselage station 358 to 614 manual release systems *(see fig. 63 for reqd)*	REF	
	MS24665-132	. . COTTER PIN (96906)	4	
-1	AN960D10	. . WASHER (88044)	4	
-2	MS20392-2C17	. . PIN (96906)	2	
-3	MS20392-2C15	. . PIN (96906)	2	
-4	MS2125135S	. . BARREL (96906)	2	
-5	769550-1	. . CABLE ASSY, LG manual release LH	1	
-6	769550-101	. . CABLE ASSY, LG manual release RH	1	
	MS24665-132	. . . COTTER PIN (96906)	1	
-7	AN960D10	. . . WASHER (88044)	1	
-8	MS20392-2C15	. . . PIN (96906)	1	
-9	726996-1	. . . TOGGLE, 1/8 inch cable fitting	1	
-10	AN486-4	. . . CLEVIS (88044)	1	
	769550-13	. . . CABLE ASSY	1	
	769550-103	. . . CABLE ASSY	1	
-11	RA2500-4	. . . . TERMINAL, strap (80097)	1	
-12	28-3M	. . . . SLEEVE, cable oval (76691)	2	
-13	AN316-4R	. . . . NUT (88044)	1	
-14	MS21042L3	. . NUT (96906)	2	
-15	AN960-10L	. . WASHER (88044)	2	
-16	NAS1103-7	. . BOLT (80205)	2	
-17	770973-1	. . CABLE ASSY, LG manual release	1	
-18	92-0001-03	. . . TERMINAL, self-aligning 1/8 inch cable (18616) (Lockheed spec dwg 750942-1) (BRE3978 and HE3-115 are alternates)	1	
	BRE3978	. . . TERMINAL, self-aligning 1/8 inch cable (81376) (Lockheed spec dwg 750942-1) (alternate to 92-0001-03 and HE3-115)	1	
	HE3-115	. . . TERMINAL, self-aligning 1/8 inch cable (Lockheed spec dwg 750942-1) (alternate to 92-0001-03 and BRE3978)	1	
-21	MS24665-136	. . COTTER PIN (96906)	1	
-22	MS21251B3S	. . BODY, turnbuckle (80205)	1	
-24	796925-1	. . CABLE ASSY, LG manual release	1	
	796925-9	. . . CABLE ASSY	1	
-25	28-3M	. . . . SLEEVE, cable oval (76691)	2	
-26	750942-1	. . . . TERMINAL, self-aligning 1/8 inch cable	1	
-29	796927-1	. . CABLE ASSY, LG manual release	1	
	796926-1	. ARM INSTL, LG manual release valve *(see fig. 63 for reqd)*	REF	
-30	AN501A10-6	. . SCREW (88044)	1	
-31	AN960D10	. . WASHER (88044)	1	
-33	796900-1	. . ARM, valve manual release lg RH	1	
-35	796910-1	. . STOP, LG manual release valve arm RH	1	
		Attaching Parts		
-35A	NAS623-3-24	. . SCREW (80205)	2	
		*		
-35B	TA105SS7-6	. . BRACKET (84971)		1-6701-6830
	783343-1	. BRACKET INSTL, fuselage station 422 LG and drag chute manual release *(see fig. 31 for reqd)*	REF	
-36	768942-1	. . BELLCRANK ASSY, fuselage station 422 LG manual release *(see fig. 87 for reqd)*	REF	
-37	768941-1	. . BRACKET ASSY, fuselage station 422 LG manual release	1	
	768941-2	. . BRACKET ASSY, fuselage station 422 LG manual release	1	
		Attaching Parts		
	NAS623-3-5	. . SCREW (80205)	3	
		*		
-38	MS21042L5	. . . NUT (96906)	1	
-39	AN960D516	. . . WASHER (88044)	1	
-40	AN5-12	. . . BOLT (88044)	1	
-41	MS20220A1	. . . PULLEY (96906)	1	

Manual Release Controls

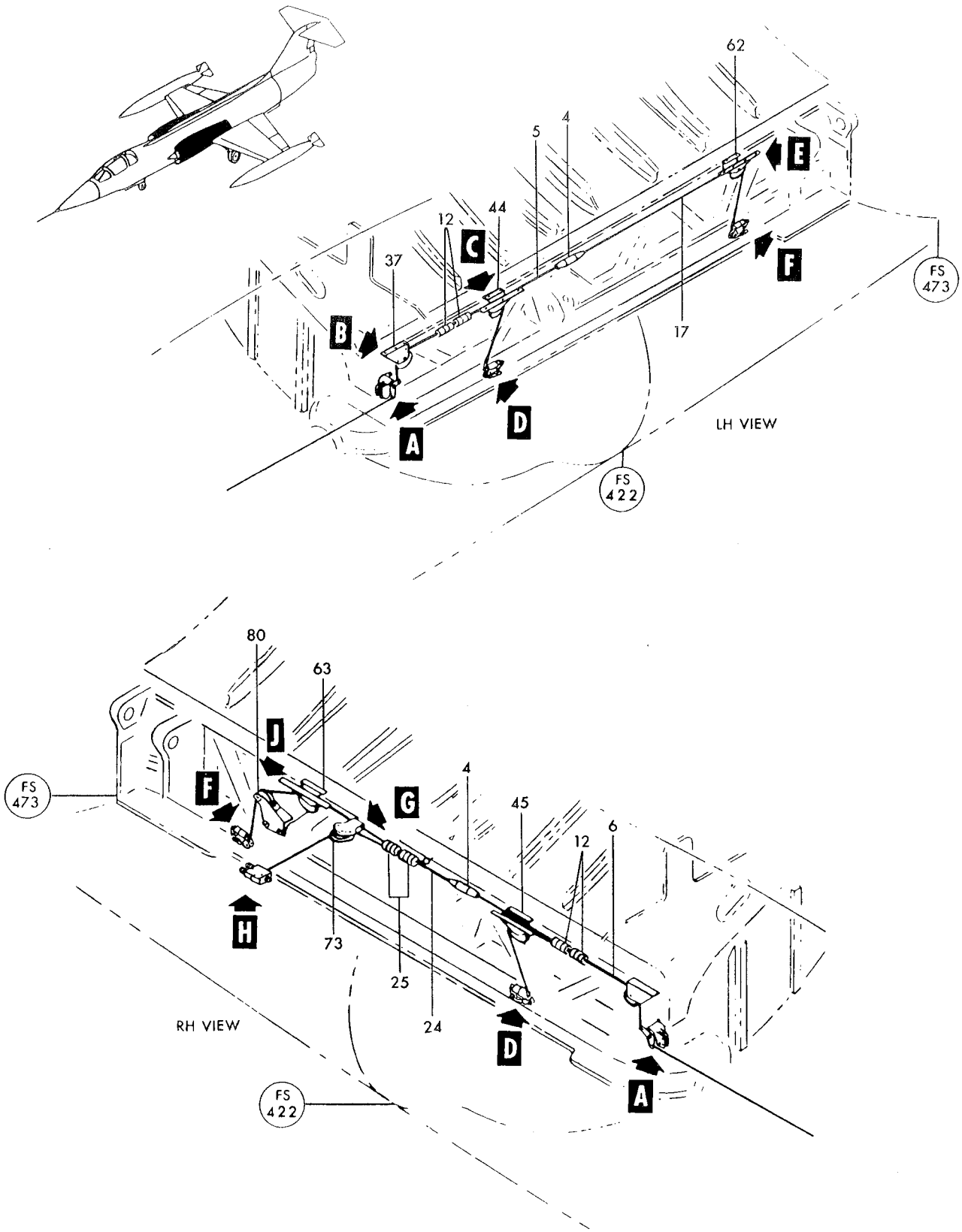

Figure 88—Main Landing Gear Emergency Release Fuselage Station 422 to 473 (Sheet 1 of 3)

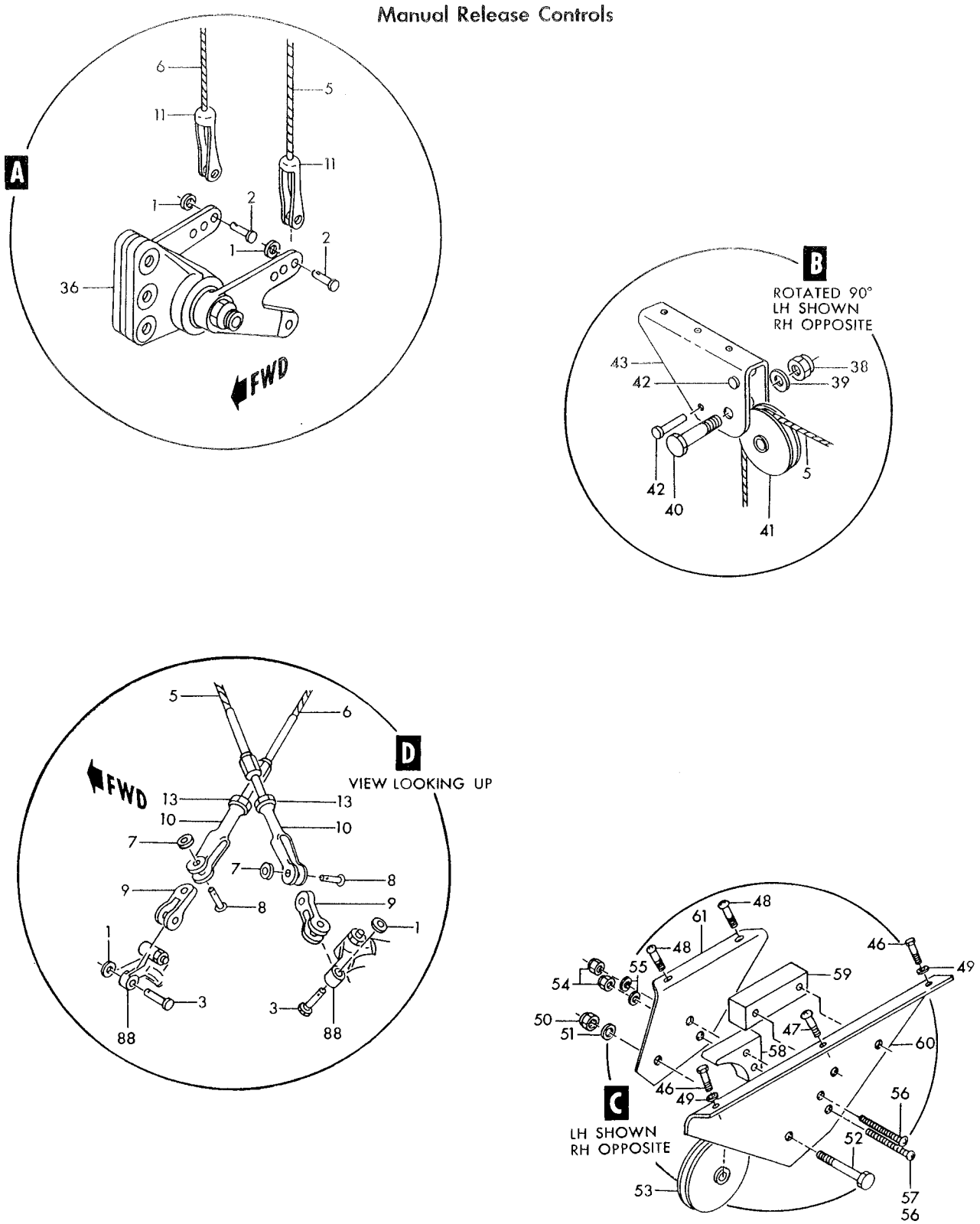

Figure 88—Main Landing Gear Emergency Release Fuselage Station 422 to 473 (Sheet 2 of 3)

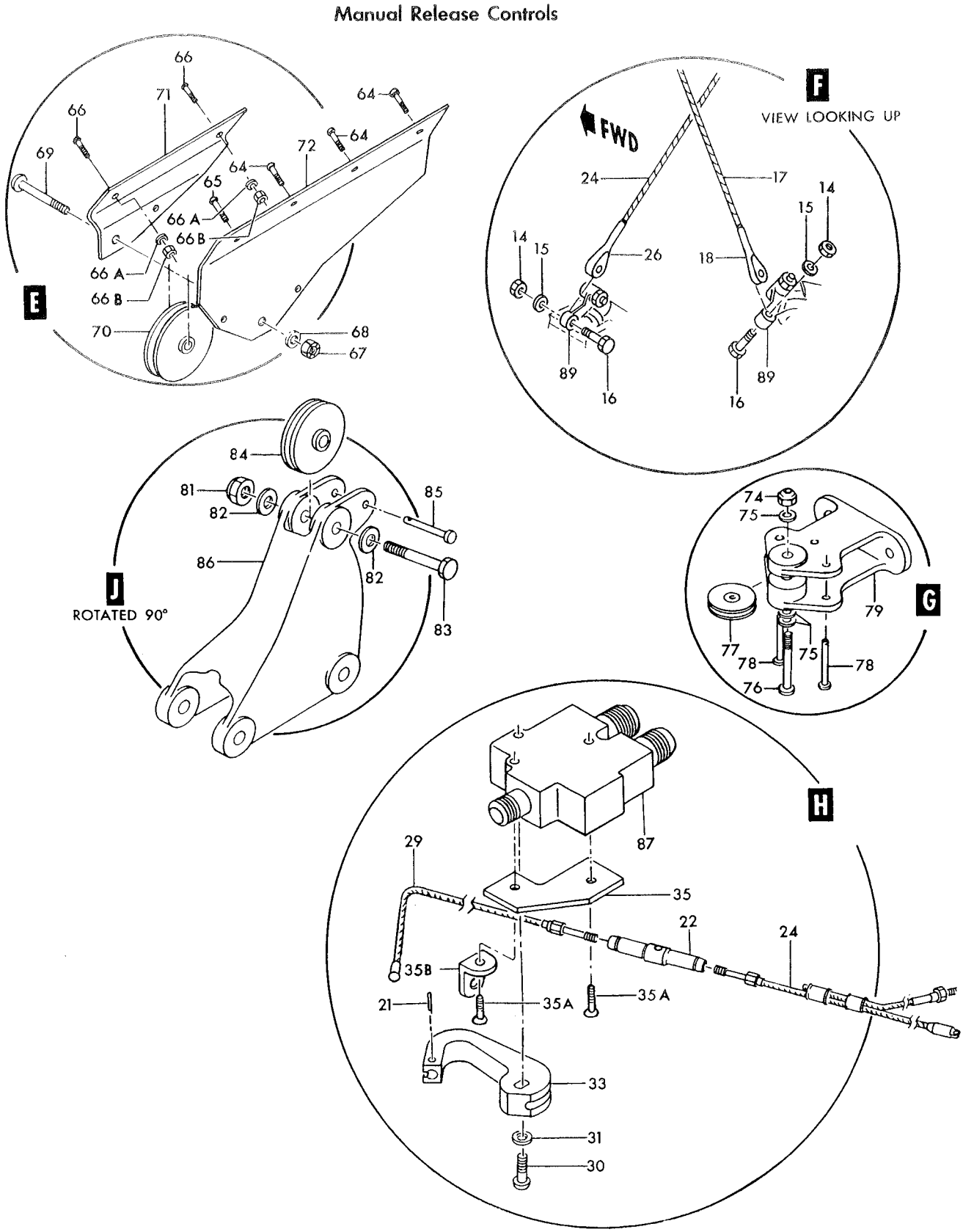

Figure 88—Main Landing Gear Emergency Release Fuselage Station 422 to 473 (Sheet 3 of 3)

Figura e particolare	NDR	DENOMINAZIONE	Quant.	Codice applicab.
88-42	NAS427K13	PIN (80205)	2	
-43	768941-3	BRACKET	1	
	768941-4	BRACKET	1	
-44	763326	BRACKET ASSY, LH fuselage station 441 LG manual release pulley	1	
-45	763327	BRACKET ASSY, RH fuselage station 441 LG manual release pulley	1	
		Attaching Parts		
-46	NAS1103-4	BOLT (80205)	2	
-47	NAS623-3-1	SCREW (80205)	1	
-48	NAS623-3-5	SCREW (80205)	2	
-49	LS881-2	WASHER, plain aluminium (36659)	AR	
		——————✲——————		
-50	MS21042L5	NUT (96906)	1	
-51	AN960D516	WASHER (88044)	1	
-52	NAS1105-14D	BOLT (80205)	1	
-53	MS20220A1	PULLEY (96906)	1	
-54	MS21042L08	NUT (96906)	2	
-55	AN960D8	WASHER (88044)	2	
-56	AN515-8R18	SCREW (88044) (1 reqd on 763327)	2	
-57	AN515-8R20	SCREW (88044)	1	
-58	763328	GUIDE, LG emer release cable	1	
-59	763329	SPACER, fuselage station 441 LG manual release bracket	1	
-60	763326-3	ANGLE (LH)	1	
	763327-3	ANGLE (RH)	1	
-61	763326-4	ANGLE (LH)	1	
	763327-4	ANGLE (RH)	1	
	763274	BRACKET INSTL, aft LG manual release *(see fig. 31 for reqd)*	REF	
-62	764757	BRACKET ASSY, MLG manual release LH aft	1	
-63	770697-1	BRACKET ASSY, MLG manual release RH aft	1	
		Attaching Parts		
-64	NAS623-3-1	SCREW (80205) (3 reqd on 764757 and 4 reqd on 770697-1)	AR	
-65	NAS623-3-5	SCREW (80205) (reqd on 764757 only)	1	
-66	NAS623-3-7	SCREW (80205)	2	
-66A	AN960-10	WASHER (88044)	2	
-66B	MS21042L3	NUT (96906)	2	
		——————✲——————		
	MS24665-136	COTTER PIN (96906)	1	
-67	AN320-5	NUT (88044)	1	
-68	AN960D516	WASHER (88044)	1	
-69	727175-1	BOLT, LH main gear aft manual LG release pulley	1	
-70	MS20220A1	PULLEY (96906)	1	
-71	764757-4	BRACKET, LH	1	
	770697-7	BRACKET, RH	1	
-72	764757-3	BRACKET, LH	1	
	770697-3	BRACKET ASSY, RH	1	
	770697-5	. BRACKET	1	
-73	763274-3	BRACKET ASSY, aft LG manual release RH	1	
		Attaching Parts		
	NAS623-3-7	SCREW (80205)	2	
	AN960D10	WASHER (88044)	2	
	MS21042L3	NUT (96906)	2	
		——————✲——————		
-74	MS21042L3	NUT (96906)	1	
-75	NAS1197-10	WASHER (80205)	3	
-76	NAS623-3-20	SCREW (80205)	1	
-77	M1B	PULLEY, control (83451)	1	
-78	NAS427K15	PIN (80205)	2	
-79	763208	BRACKET, MLG door selector valve	1	
-80	763274-4	BRACKET ASSY, LG manual release RH *(see fig. 242 for reqd)*	REF	
-81	MS21042L5	NUT (96906)	1	
-82	NAS1197-516	WASHER (80205)	2	

Figura e particolare	NDR	1 2 3 4 5 6 7 DENOMINAZIONE	Quant.	Codice applicab.
88-83	NAS1105-22D	. . BOLT (80205)	1	
-84	MS20220A1	. . PULLEY (96906)	1	
-85	NAS427W20	. . PIN (80205)	1	
-86	770746-1	. . BRACKET, main LG manual release	1	
-87	784010-7	. VALVE ASSY, main wheel well dump *(see fig. 121 for reqd)*	REF	
-88	762260-6L	. LATCH ASSY, MLG fwd door *(see fig. 242 for reqd)*	REF	6701-6815
	762260-107	. LATCH ASSY, MLG fwd door *(see fig. 242 for reqd)*	REF	6816-
	762260-6R	. LATCH ASSY, MLG fwd door *(see fig. 242 for reqd)*	REF	6701-6815
	762260-108	. LATCH ASSY, MLG fwd door *(see fig. 242 for reqd)*	REF	6816-
-89	762260-7L	. LATCH ASSY, MLG aft door *(see fig. 242 for reqd)*	REF	6701-6740
	762260-103	. LATCH ASSY, MLG aft door *(see fig. 242 for reqd)*	REF	6741-6815
	762260-109	. LATCH ASSY, MLG aft door *(see fig. 242 for reqd)*	REF	6816-
	762260-7R	. LATCH ASSY, MLG aft door *(see fig. 242 for reqd)*	REF	6701-6740
	762260-104	. LATCH ASSY, MLG aft door *(see fig. 242 for reqd)*	REF	6741-6815
	762260-110	. LATCH ASSY, MLG aft door *(see fig. 242 for reqd)*	REF	6816-

Figura e particolare	NDR	DENOMINAZIONE 1 2 3 4 5 6 7	Quant.	Codice applicab.
		RAM AIR TURBINE DOOR MANUAL RELEASE		
89	786054-1	. BRACKET INSTL, fuselage station 206 ram air turbine release *(see fig. 63 for reqd)*	REF	
-1	MS21042L3	. . NUT (96906)	2	
-2	AN960-10L	. . WASHER (88044)	2	
-3	NAS623-3-12	. . SCREW (80205)	1	
-4	NAS623-3-10	. . SCREW (80205)	1	
-5	M1B	. . PULLEY, control (83451)	2	
-6	725442	. . BRACKET, release	4	
-7	762968-89	. . TUBE ASSY, ram air turbine release	1	
-8	726409-3	. . SPRING, fuselage station 614 rudder cable (ram air turbine release)	1	
-9	MS21251B2S	. . BODY, turnbuckle (96906)	1	
-10	NAS651-16S	. . CLIP (80205)	1	
-11	781126-1	. . CLIP, ram air turbine release handle retention spring	1	
-12	775193-1	. . CLIP, ram air turbine release cable	1	
-13	781127-3	. . BRACKET, fuselage station 206 ram air turbine release pulley	1	
		Attaching Parts		
-14	NAS623-3-5	. . SCREW (80205)	2	
-15	AN960-10L	. . WASHER (88044)	2	
-16	MS21042L3	. . NUT (96906)	2	
		*		
-17	762865	. . ADAPTER, emergency landing gear release alfite bracket	1	
-18	AN936A516	. . WASHER (88044)	1	
-19	786054-3	. . HANDLE ASSY, fuselage station 206 ram air turbine release	1	
-20	726336-4	. . . HANDLE, manual ram air turbine release *(see fig. 222)*	1	
-21	NAS561P3-8	. . . PIN (80205)	1	
-22	726304-3	. . . ADAPTER, emergency release handle	1	
-23	176663	. . . WASHER, control handle	1	
-24	726303-3	. . . GUIDE, emergency release handle	1	
-25	769185-77	. . . CABLE ASSY, control manual release	1	
	763249	. BRACKET INSTL, fuselage station 267 turbine pump control pulley *(see fig. 63 for reqd)*	REF	
-26	762968-22	. . TUBE ASSY, turbine pump release	1	
-27	762968-25	. . TUBE, turbine pump release	1	
-28	763200	. . BRACKET ASSY, fuselage station 267 turbine pump control pulley	1	
-29	MS21042L3	. . . NUT (96906)	1	
-30	NAS623-3-10	. . . SCREW (80205)	1	
-31	725442	. . . BRACKET, release	2	
-32	M1B	. . . PULLEY, control (83451)	1	
-33	763200-3	. . . SUPPORT	1	
	763250	. BRACKET INSTL, fuselage station 255 turbine pump control pulley *(see fig. 63 for reqd)*	REF	
-34	762968-23	. . TUBE ASSY, turbine pump release	1	
-35	762968-24	. . TUBE ASSY, turbine pump release	1	
-36	774578-1	. . BRACKET ASSY, fuselage station 255 turbine pump control pulley	1	
-37	MS21042L3	. . . NUT (96906)	1	
-38	AN960D10	. . . WASHER (88044)	1	
-39	NAS623-3-12	. . . SCREW (80205)	1	
-40	725442	. . . BRACKET, release	2	
-41	M1B	. . . PULLEY, control (83451)	1	
	783162-9	. CONTROL INSTL, RH fuselage station 184 to 358 manual release systems *(see fig. 63 for reqd)*	REF	
-42	764564	. . INSULATOR-TUBE, fuselage station 322 turbine pump control release line	1	
-43	763361-501	. . CABLE ASSY, turbine pump control	1	
-44	750413-3	. . . TERMINAL, cable turnbuckle	1	
-45	RA2500-2	. . . TERMINAL, strap cable (80097)	1	
-46	MS20664C2	. . . TERMINAL (96906)	1	
-47	MS20392-2C11	. . PIN (96906)	1	
-48	AN960D10	. . WASHER (88044)	1	
	MS24665-132	. . COTTER PIN (96906)	1	

Manual Release Controls

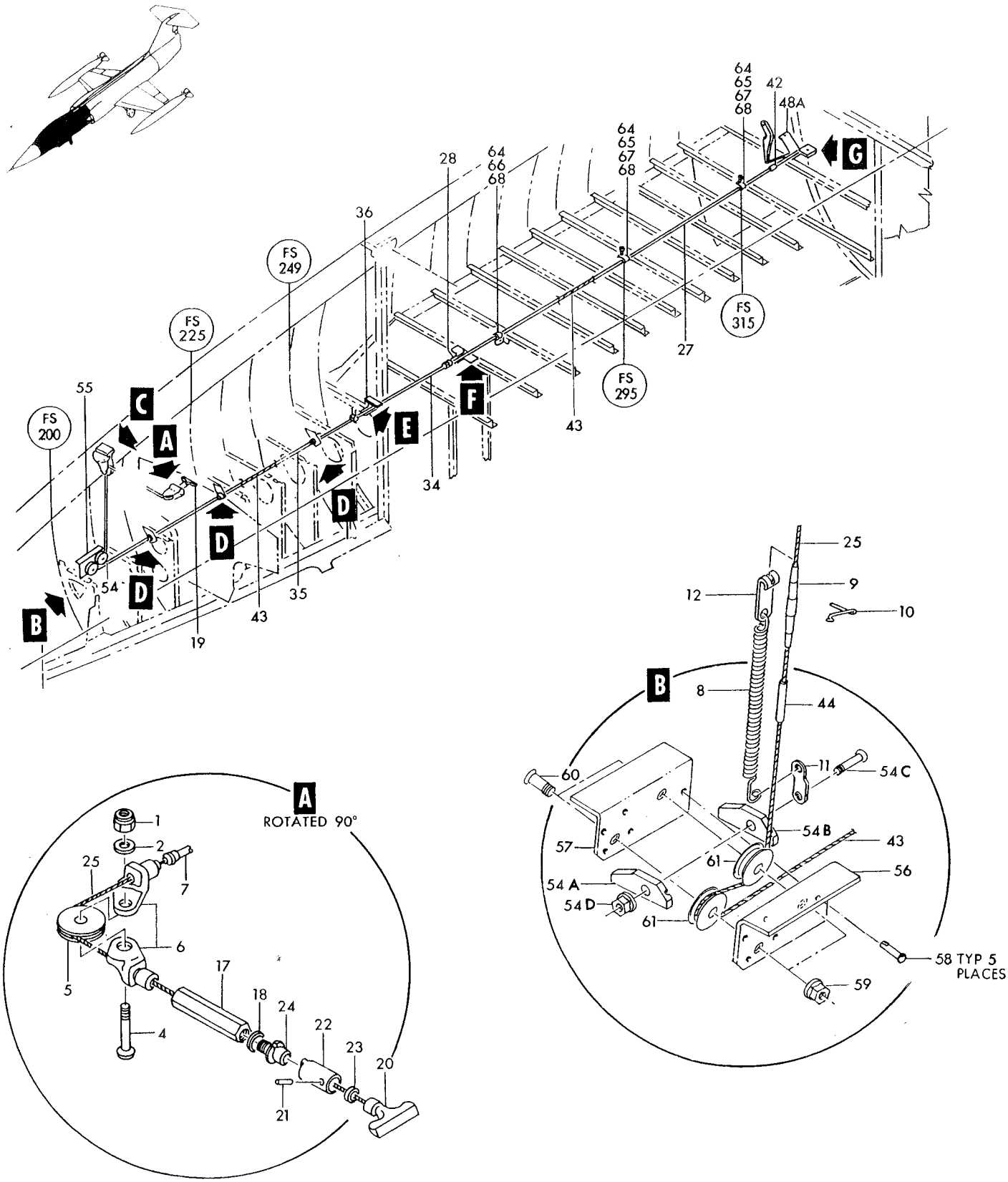

Figure 89—Ram Air Turbine Door Manual Release (Sheet 1 of 2)

Manual Release Controls

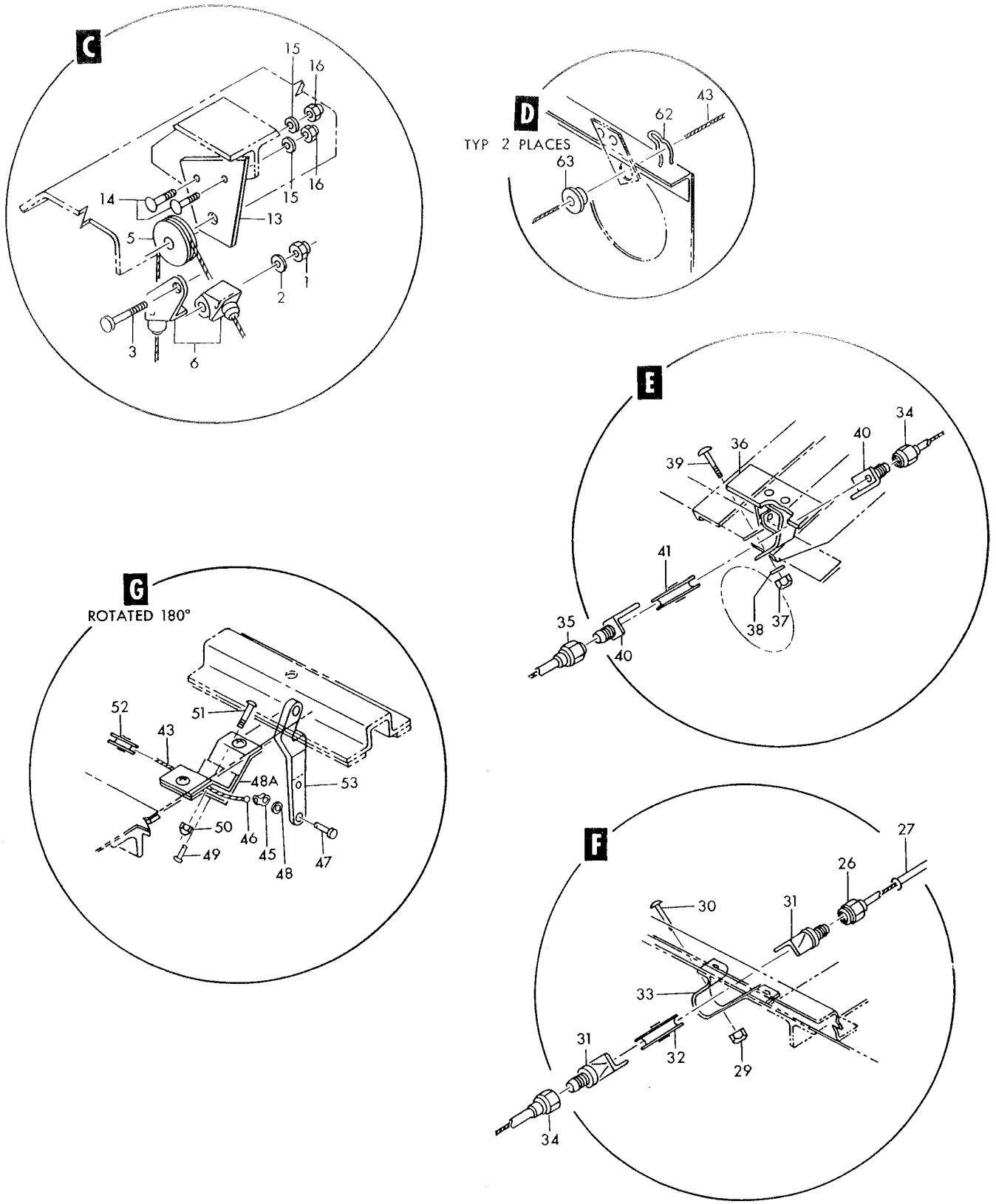

Figure 89—Ram Air Turbine Door Manual Release (Sheet 2 of 2)

Figura e particolare	NDR	DENOMINAZIONE 1 2 3 4 5 6 7	Quant.	Codice applicab.
89	763248	BRACKET INSTL, fuselage station 322 to 328 turbine pump control pulley *(see fig. 38 for reqd)*	REF	
-48A	763199	BRACKET ASSY, fuselage station 322 to 328 turbine pump control pulley	1	
		Attaching Parts		
	NAS221-9	SCREW (80205)	2	
	AN960D10	WASHER (88044)	2	
	MS21042L3	NUT (96906)	2	
		✡		
	MS24665-130	COTTER PIN (96906)	1	
-49	MS20392-2C13	PIN (96906)	1	
-50	MS21042L3	NUT (96906)	1	
-51	NAS623-3-6	SCREW (80205)	1	
-52	FL3C3	PULLEY, fairlead cable (21335)	1	
-53	765489-1	LATCH, ram air turbine release *(see fig. 50 for reqd)*	REF	
	760147-43	SHELF ASSY, cockpit *(see fig. 37 for reqd)*	REF	6701-6815
	760147-109	SHELF ASSY, cockpit *(see fig. 37 for reqd)*	REF	6816-
	763281	BRACKET INSTL, fuselage station 206 lower turbine pump control pulley	1	
-54	764300	SEAL ASSY, fuselage station 206 turbine pump control cable	1	
-54A	764300-3L	SEAL, turbine pump control cable (match comp do not stk sep)	1	
-54B	764300-3R	SEAL, turbine pump control cable (match comp do not stk sep)	1	
		Attaching Parts		
-54C	NAS623-3-7	SCREW (80205)	1	
-54D	MS21042L3	NUT (96906)	1	
		✡		
-55	763202	BRACKET ASSY, fuselage station 206 lower turbine pump control pulley	1	
		Attaching Parts		
	NAS221-9	SCREW (80205)	2	
	NAS221-10	SCREW (80205)	2	
		✡		
-56	763202-3	BRACKET	1	
-57	763202-4	BRACKET	1	
-58	NAS427K7	PIN (80205)	5	
-59	MS21042L3	NUT (96906)	2	
-60	NAS623-3-6	SCREW (80205)	2	
-61	M1B	PULLEY (83451)	2	
	763324	SUPPORT INSTL, fuselage station 212, 225 and 244 turbine pump control fairlead	1	6701-6815
	852317-101	SUPPORT INSTL, fuselage station 244 turbine pump control fairlead	1	6816-
	852317-103	SUPPORT INSTL, fuselage station 225 turbine pump control fairlead	1	6816-
	852317-105	SUPPORT INSTL, fuselage station 212 turbine pump control fairlead	1	6816-
	763324-3	FAIRLEAD ASSY	3	6701-6815
-62	LS1002	CLIP, fairlead bushing retainer (36659)	1	
-63	LS832-4	BUSHING, split type fairlead (36659)	2	
	763322	SUPPORT INSTL, fuselage station 279, 294 and 315 turbine pump control *(see fig. 63 for reqd)*	REF	
-64	MS21042L3	NUT (96906)	3	
	AN960-10L	WASHER (88044)	3	
-65	NAS43DD3-28	SPACER (80205)	2	
-66	AN520-10R8	SCREW (88044)	1	
-67	AN520-10R14	SCREW (88044)	2	
-68	AN742D4	CLAMP (88044)	3	

Figura e particolare	NDR	DENOMINAZIONE 1 2 3 4 5 6 7	Quant.	Codice applicab.
		DRAG CHUTE RELEASE FUSELAGE STATION 184 TO 255		
90	763008-5	HANDLE INSTL, drag chute *(see fig. 63 for reqd)*	REF	
- 1	763008-3	HANDLE ASSY, drag chute	1	
- 2	726951-1	HANDLE ASSY, drag chute release *(see fig. 222)*	1	
	726950-1	BUTTON, drag handle release	1	
- 3	NAS561P3-8	ROLLPIN (80205)	1	
- 4	762921	SLIDE ASSY, drag chute	1	
- 5	LS2123-2-0-375	KEY, square (36659)	1	
- 6	176663	WASHER, control handle	1	
- 7	762235	BRACKET, drag chute release pulley	1	
- 8	762922	HOUSING ASSY, drag chute release slide	1	
		Attaching Parts		
	NAS623-3-2	SCREW (80205)	2	
	MS21042L3	NUT (96906)	2	
- 9	MS21042L3	NUT (96906)	3	
-10	NAS623-3-12	SCREW (80205)	3	
-11	M1B	PULLEY, control (83451)	1	
-12	NAS427K14	PIN (80205)	1	
-13	726316-3	ADAPTER, drag chute tube	1	
-14	NAS322H13-2570	CABLE ASSY (80205)	1	
	783162-501	CONTROL INSTL, LH fwd manual release system *(see fig. 63 for reqd)*	REF	
-15	762968-3	TUBE ASSY, drag chute release	1	
-16	MS21042L3	NUT (96906)	1	
-17	NAS623-3-1	SCREW (80205)	1	
-18	772093-93	CABLE ASSY, drag chute and arrestor hook release *(see fig. 91)*	1	
-19	RA2500-3	TERMINAL, strap (80097)	1	
	MS20664C3	TERMINAL (96906)	2	
	772093-95	CABLE	1	
-20	762968-7	TUBE ASSY, drag chute release	1	
-21	762968-41	TUBE ASSY, drag chute release *(see fig. 91)*	1	
-22	762968-57	TUBE ASSY, drag chute release *(see fig. 91)*	1	
	785950-1	SUPPORT INSTL, fuselage station 195 drag chute release *(see fig. 63 for reqd)*	REF	
-23	763119	CLIP, drag chute release support	1	
		Attaching Parts		
	NAS623-3-2	SCREW (80205)	3	
	MS21042L3	NUT (96906)	3	
	785949-1	SUPPORT ASSY, fuselage station 195 drag chute release	1	
		Attaching Parts		
	NAS623-3-3	SCREW (80205)	1	
	NAS623-3-2	SCREW (80205)	1	
	MS21042L3	NUT (96906)	2	
-24	MS21042L3	NUT (96906)	1	
-25	NAS623-3-16	SCREW (80205)	1	
-26	NAS43DD3-18	SPACER (80205)	1	
-27	725442	BRACKET, drag chute release cable	1	
-28	M1B	PULLEY, control (83451)	1	
-29	NAS427K14	PIN (80205)	1	
-30	785948-1	SUPPORT, fuselage station 195 drag chute release	1	
-31	763117	BRACKET ASSY, drag chute support	1	
	763007	BRACKET INSTL, fuselage station 195 lower drag chute release *(see fig. 36 for reqd)*	REF	
-32	764299	SEAL, fuselage station 195 drag chute release cable	1	
		Attaching Parts		
	NAS221-12	SCREW (80205)	2	
	AN960D10	WASHER (88044)	2	
	AN366F1032	NUT (88044)	2	

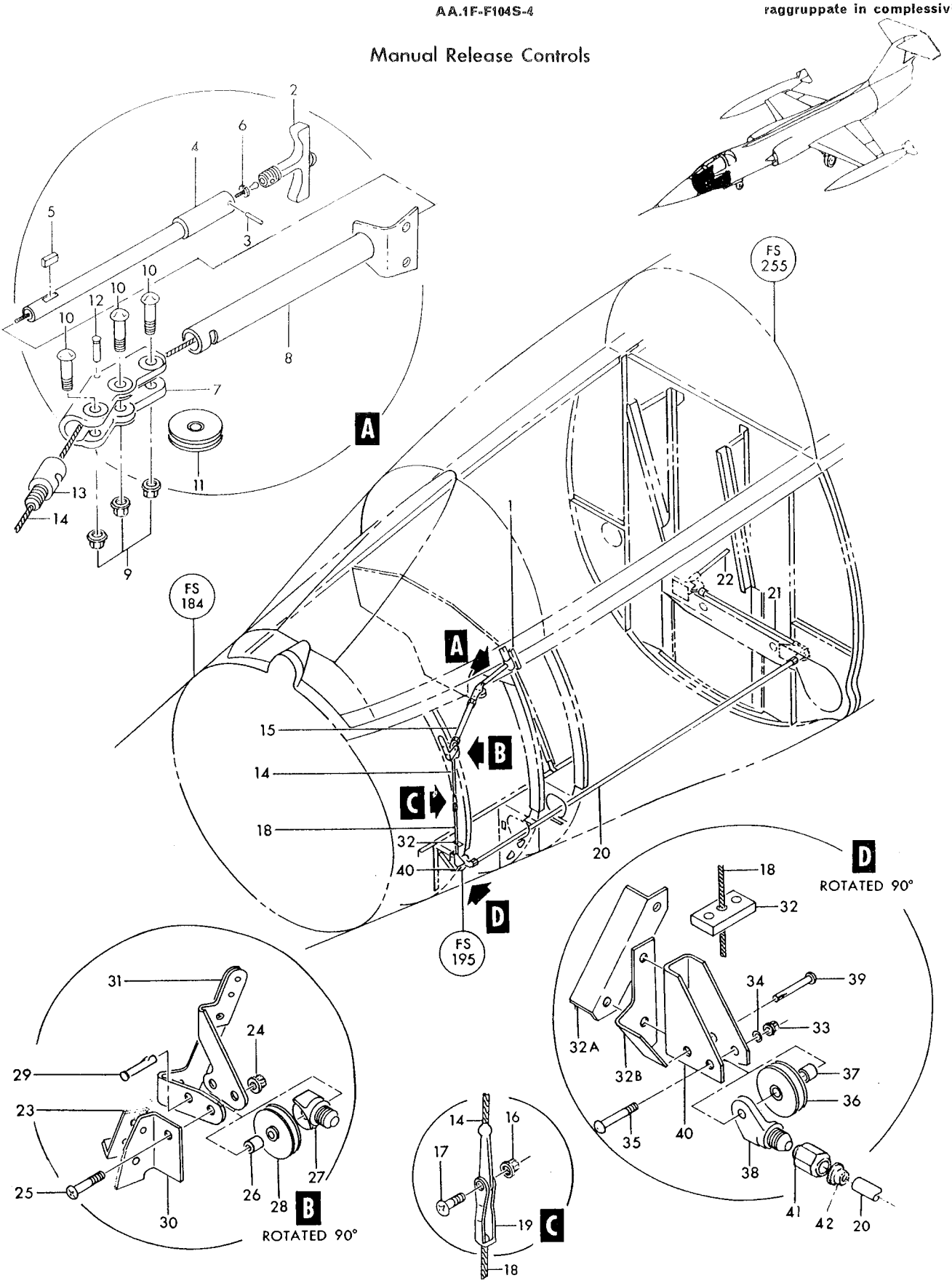

Figure 90—Drag Chute Release Fuselage Station 184 to 255

Figura e particolare	NDR	DENOMINAZIONE 1 2 3 4 5 6 7	Quant.	Codice applicab.
90-32A	763005	ANGLE, drag chute release	1	
-32B	763006	SUPPORT, drag chute release	1	
	763013	BRACKET ASSY, drag chute release	1	
		Attaching Parts		
	NAS221-10	SCREW (80205)	2	
	NAS623-3-3	SCREW (80205)	1	
	MS21042L3	NUT (96906)	3	
		☼		
-33	MS21042L3	NUT (96906)	1	
-34	AN960D10	WASHER (88044)	1	
-35	NAS623-3-12	SCREW (80205)	1	
-36	M1B	PULLEY, control (83451)	1	
-37	NAS43DD3-14	SPACER (80205)	1	
-38	2CD2473	BRACKET, pulley (02413)	1	
-39	NAS427K14	PIN (80205)	1	
-40	763012	BRACKET, fuselage station 195 lower drag chute release	1	
-41	AN818-4D	NUT (88044)	1	
-42	MS20819-4	SLEEVE (96906)	1	

Figura e particolare	NDR	DENOMINAZIONE (1 2 3 4 5 6 7)	Quant.	Codice applicab.
		DRAG CHUTE RELEASE FUSELAGE STATION 255 TO 340		
91	783162-501	CONTROL INSTL, LH fwd manual release systems *(see fig. 63 for reqd)*	REF	
- 2	772093-93	CABLE ASSY, drag chute and arrestor hook release *(see fig. 90 for reqd)*	REF	
- 3	762968-41	TUBE ASSY, drag chute release *(see fig. 90 for reqd)*	REF	
- 4	762968-57	TUBE ASSY, drag chute release *(see fig. 90 for reqd)*	REF	
- 5	762968-83	TUBE ASSY, drag chute release	1	
	762675	BRACKET ASSY, emergency LG and drag chute release *(see fig. 85 for reqd)*	REF	
- 6	MS21042L3	NUT (96906)	1	
- 6A	AN960D10	WASHER (88044)	1	
- 7	NAS623-3-26	SCREW (80205)	1	
- 8	725442	BRACKET, release	3	
- 9	NAS43DD3-16	SPACER (80205)	1	
-10	M1B	PULLEY, control (83451)	2	
-11	762675-3	BRACKET, LG and drag chute release	1	
-12	768607-1	BRACKET ASSY, fuselage station 255 LG and drag chute manual release *(see fig. 85 for reqd)*	REF	
-13	768607-3	BRACKET ASSY, LG and drag chute release	1	
-14	MS21042L3	NUT (96906)	1	
-15	NAS623-3-22	SCREW (80205)	1	
-16	249996-2	PIN, pulley guard	2	
-17	M1B	PULLEY, control (83451)	2	
-18	725442	BRACKET, release	2	
-19	NAS43DD3-20	SPACER (80205)	1	
	762679	BRACKET INSTL, fuselage station 279 emergency LG release and drag chute *(see fig. 63 for reqd)*	REF	
	775753-1	BRACKET ASSY, fuselage station 279 drag chute release	1	
		Attaching Parts		
	NAS623-3-3	SCREW (80205)	2	
	AN960D10	WASHER (88044)	2	
	MS21042L3	NUT (96906)	2	
		*		
-20	775753-3	BRACKET	1	
-21	MS21042L3	NUT (96906)	1	
-22	AN960D10	WASHER (88044)	1	
-23	NAS623-3-11	SCREW (80205)	1	
-24	725442	BRACKET, release	2	
-25	M1B	PULLEY, control (83451)	1	
	783112-7	BRACKET INSTL, fuselage station 305 to 335 LG and drag chute manual release *(see fig. 63 for reqd)*	REF	
-26	783128-1	SEAL ASSY, drag chute release	1	
-26A	783128-3	SEAL, drag chute release (match comp do not stk sep)		
-26B	783128-5	SEAL, drag chute release (match comp do not stk sep)		
		Attaching Parts		
-27	NAS623-3-5	SCREW (80205)	1	
-27A	AN960D10	WASHER (88044)	1	
-27B	MS21042L3	NUT (96906)	1	
		*		
-28	775754-1	BRACKET ASSY, fuselage station 305 drag chute release	1	
		Attaching Parts		
-29	NAS623-3-5	SCREW (80205)	4	
-30	AN960D10	WASHER (88044)	6	
-30A	MS21042L3	NUT (96906)	4	
		*		
-31	MS21042L3	NUT (96906)	1	
-32	AN960D10	WASHER (88044)	1	
-33	NAS623-3-9	SCREW (80205)	1	
-34	M1B	PULLEY, control (83451)	1	
-35	725442	BRACKET, release	1	
	783162-505	CONTROL INSTL, fuselage station 184 to 354 LH manual release systems *(see fig. 63 for reqd)*	REF	

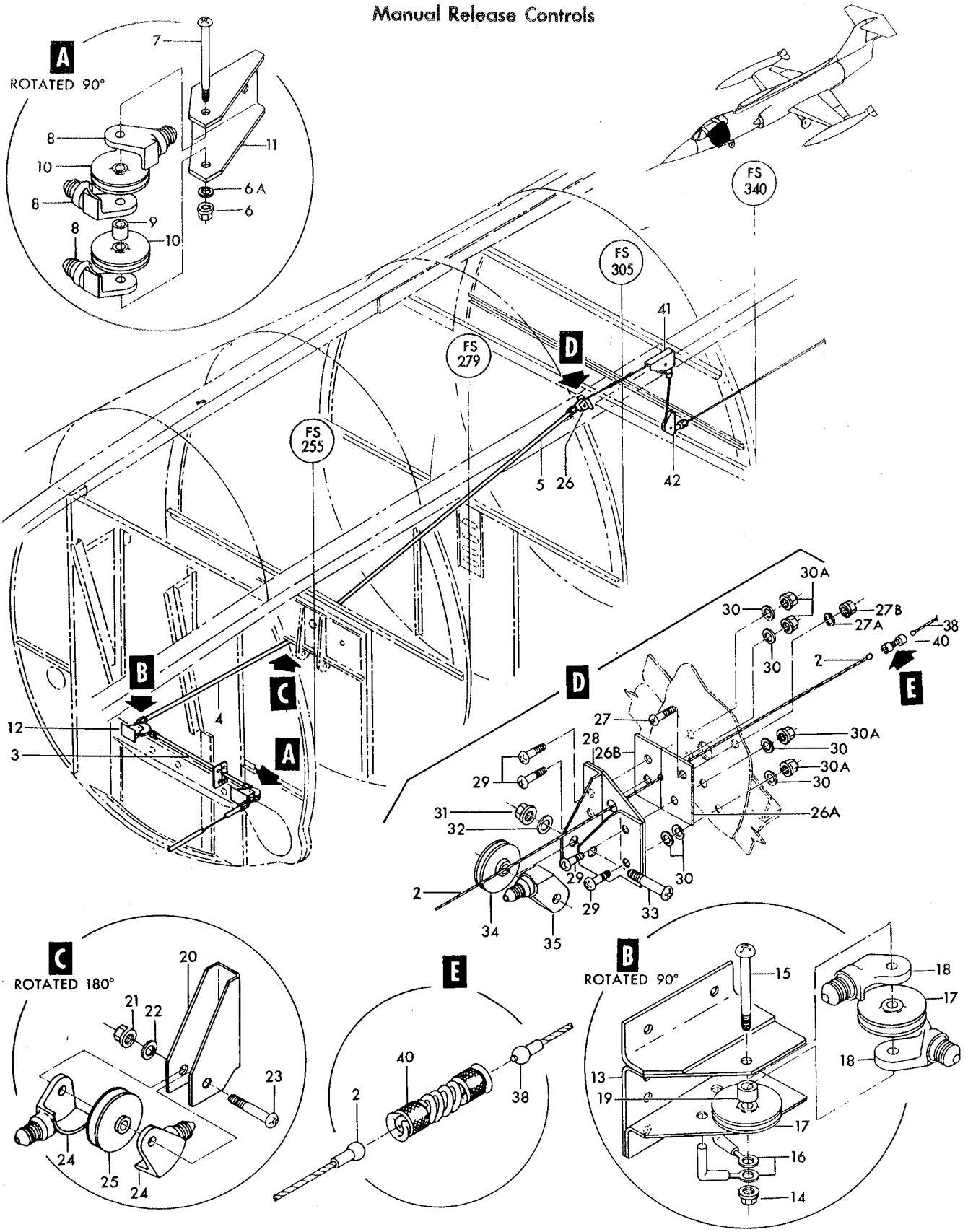

Figure 91—Drag Chute Release Fuselage Station 255 to 340

Figura e particolare	NDR	DENOMINAZIONE 1 2 3 4 5 6 7	Quant.	Codice applicab.
91-38	772093-97	CABLE ASSY, drag chute and arrestor hook release *(see fig. 92 and 93)*	1	
	772093-99	CABLE	1	
	MS20664C3	TERMINAL (96906)	1	
-40	RA2258-3	TERMINAL, disconnect (80097)	1	
-41	775755-1	BRACKET ASSY, fuselage station 335 drag chute and LG manual release *(see fig. 87 for reqd)*	REF	
-42	M1B	PULLEY, control (83451) *(see fig. 87 for reqd)*	REF	
	784566-1	CLAMPBLOCK ASSY, fuselage station 335 manual release cable tube *(see fig. 87 for reqd)*	REF	

Figura e particolare	NDR	1 2 3 4 5 6 7 DENOMINAZIONE	Quant.	Codice applicab.
		DRAG CHUTE RELEASE FUSELAGE STATION 340 TO 497		
92- 1	772093-97	. CABLE ASSY, drag chute and arrestor hook release *(see fig. 91 for reqd)* .	REF	
	783162-101	. CONTROL INSTL, LH fuselage station 358 to 614 manual release systems *(see fig. 63 for reqd)*	REF	
- 2	762968-51	. . TUBE ASSY, manual LG drag release *(see fig. 87 for reqd)*	REF	
- 3	762968-55	. . TUBE ASSY, drag chute release	1	
- 4	762968-53	. . TUBE ASSY, drag chute release	1	
- 5	762968-11	. . TUBE ASSY, drag chute release	1	
	783343-1	. BRACKET INSTL, fuselage station 422 LG and drag chute manual release *(see fig. 31 for reqd)*	REF	
- 6	768951-1	. . FAIRLEAD ASSY, fuselage station 422 LG manual release *(see fig. 87 for reqd)*	REF	
- 6A	768951-3	. . . FAIRLEAD (match comp do not stk sep)	1	
- 6B	768951-5	. . . FAIRLEAD (match comp do not stk sep)	1	
- 7	768945-1	. . BRACKET ASSY, drag chute release	1	
		Attaching Parts		
	NAS623-3-7	. . SCREW (80205)	2	
	AN960D10	. . WASHER (88044)	2	
	MS21042L3	. . NUT (96906)	2	
- 8	768947-1	. . . BRACKET, drag chute release	1	
- 9	M1B	. . . PULLEY, control (83451)	1	
-10	725442	. . . BRACKET, release	1	
-11	NAS623-3-14	. . . SCREW (80205)	1	
-11A	AN960D10	. . . WASHER (88044)	1	
-12	MS21042L3	. . . NUT (96906)	1	
-13	783343-3	. . BRACKET ASSY, fuselage station 422 LG and drag chute release . .	1	
-14	NAS623-3-11	. . . SCREW (80205)	1	
-15	M1B	. . . PULLEY, control (83451)	1	
-16	725442	. . . BRACKET, release	2	
-17	783342-1	. . . BRACKET ASSY, drag chute release	1	
		Attaching Parts		
-18	NAS623-3-11	. . . SCREW (80205)	4	
	AN960D10	. . . WASHER (88044)	4	
	MS21042L3	. . . NUT (96906)	4	
	762862	. BRACKET INSTL, fuselage station 489 drag chute release *(see fig. 31 for reqd)*	REF	
-19	762862-3	. . BRACKET ASSY, fuselage station 489 drag chute release	1	
		Attaching Parts		
-20	AN23-16A	. . BOLT (88044)	1	
-21	AN42B6A	. . BOLT (88044)	1	
-22	NAS623-3-12	. . SCREW (80205)	1	
-23	726323-3	. . BUSHING, drag chute bracket	1	
-24	NAS43DD3-10	. . SPACER (80205)	1	
-25	NAS43DD3-18	. . SPACER (80205)	2	
-26	MS21042L3	. . NUT (96906)	2	
-27	762861	. . . BRACKET ASSY, fuselage station 489 drag chute release . . .	1	
-28	762968-10	. . . TUBE ASSY, drag chute release	1	
-29	2CD2473	. . . BRACKET ASSY, pulley control (02413)	4	
-30	M1B	. . . PULLEY (83451)	2	
-31	AN960-10L	. . . WASHER (88044)	5	
-32	LS1551-190-688	. . . WASHER, annular serrated (36659)	2	
-33	NAS623-3-12	. . . SCREW (80205)	1	
-33A	NAS623-3-16	. . . SCREW (80205)	1	
-34	MS21042L3	. . . NUT (96906)	2	
	762862-5	. BUSHING INSTL, drag chute release *(see fig. 31 for reqd)*	REF	
-35	LS1002	. . CLIP, fairlead bushing retainer (36659)	1	
-36	LS832-4	. . BUSHING, split type fairlead (36659)	2	

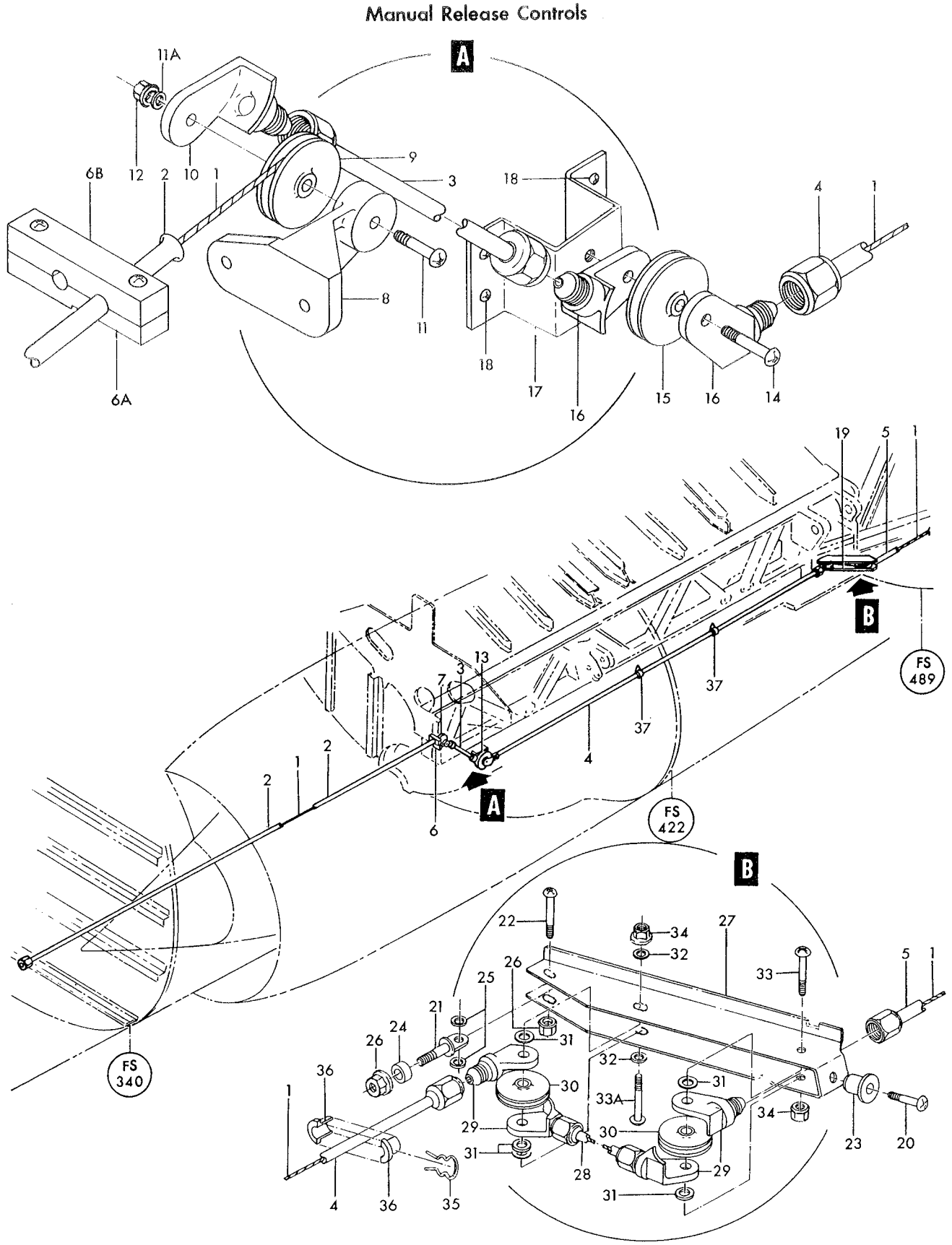

Figure 92—Drag Chute Release Fuselage Station 340 to 497

Figura e particolare	NDR	1 2 3 4 5 6 7 DENOMINAZIONE	Quant.	Codice applicab.
92	763137	. CLAMP INSTL, fuselage station 340 to 489 drag chute release *(see fig. 63 for reqd)*	REF	
-37	MS21919DG4	. . CLAMP (96906)	2	
		Attaching Parts		
	AN520-10R22	. . SCREW (88044)	1	
	NAS43DD3-40	. . SPACER (80205)	1	
	MS21042L3	. . NUT (96906)	1	

Figura e particolare	NDR	DENOMINAZIONE 1 2 3 4 5 6 7	Quant.	Codice applicab.
		DRAG CHUTE AND ARRESTOR HOOK RELEASE FUSELAGE STATION 497 TO 614		
93- 1	772093-97	CABLE ASSY, drag chute and arrestor hook release *(see fig. 91 for reqd)*	REF	
	NAS650S3LH	TERMINAL (80205)	1	
	799097-101	CLAMP INSTL, fuselage station 539 to 579 drag chute release *(see fig. 63 for reqd)*	REF	
- 2	794-4	CLAMP, lug type cushioned one hole loop (00502)	1	
		Attaching Parts		
	AN520-10R8	SCREW (88044)	2	
	MS21042L3	NUT (96906)	2	
		✲		
- 3	AN742D4	CLAMP (88044)	1	
		Attaching Parts		
	AN520-10R14	SCREW (88044)	1	
	NAS43-3-32	SPACER (80205)	1	
	MS21042L3	NUT (96906)	1	
		✲		
- 4	AN742D4	CLAMP (88044)	1	
		Attaching Parts		
	AN520-10R20	SCREW (88044)	1	
	NAS43-3-56	SPACER (80205)	1	
	MS21042L3	NUT (96906)	1	
		✲		
	783162-101	CONTROL INSTL, fuselage station 358 to 614 manual release systems *(see fig. 63 for reqd)*	REF	
- 5	762968-12	TUBE ASSY, drag chute release	1	
- 6	762968-13	TUBE ASSY, drag chute release	1	
	MS24665-132	COTTER PIN (96906)	1	
- 7	MS20392-2C15	PIN (96906)	1	
- 8	NAS646-3RS	FORK (80205)	1	
- 9	MS21251B3S	BODY, turnbuckle (96906)	1	
-10	772093-133	CABLE ASSY, drag chute release *(see fig. 94)*	1	
-11	MS20664C3	TERMINAL (96906)	1	
-12	RA2500-3	TERMINAL (80097)	1	
-13	MS20392-2C27	PIN (96906)	1	
	MS24665-132	COTTER PIN (96906)	1	
-14	NAS645-16RS	FORK (80205)	2	
-15	MS21251B3S	BODY, turnbuckle (96906)	2	
-16	772093-101	CABLE ASSY, drag chute release *(see fig. 256)*	1	
-17	NAS650S3LH	TERMINAL (80205)	1	
-18	MS20668-3	TERMINAL (96906)	1	
-19	772093-105	CABLE ASSY, arrestor hook release	1	
-20	NAS650S3LH	TERMINAL (80205)	1	
-21	MS20664C3	TERMINAL (96906)	1	
	762785	BRACKET INSTL, fuselage station 497 drag chute release *(see fig. 63 for reqd)*	REF	
-22	762785-3	BRACKET ASSY, drag chute release	1	
		Attaching Parts		
-23	AN520-10R6	SCREW (88044)	2	
-24	NAS623-3-7	SCREW (80205)	2	
-25	MS21042L3	NUT (96906)	4	
		✲		
-26	762785-4	BRACKET, drag chute release	1	
-27	762785-5	HANGER, drag chute release bracket	1	
-28	MS21042L3	NUT (96906)	1	
-29	NAS623-3-11	SCREW (80205)	1	
-30	M1B	PULLEY (83451)	1	
-31	2CD2473	BRACKET (02413)	2	
-32	763370	BLOCK, drag chute fuselage station 497 pulley bracket	1	
	783165-1	BRACKET INSTL, fuselage station 520 drag chute release *(see fig. 63 for reqd)*	REF	
	783163-1	BRACKET ASSY, fuselage station 520 drag chute release pulley	1	

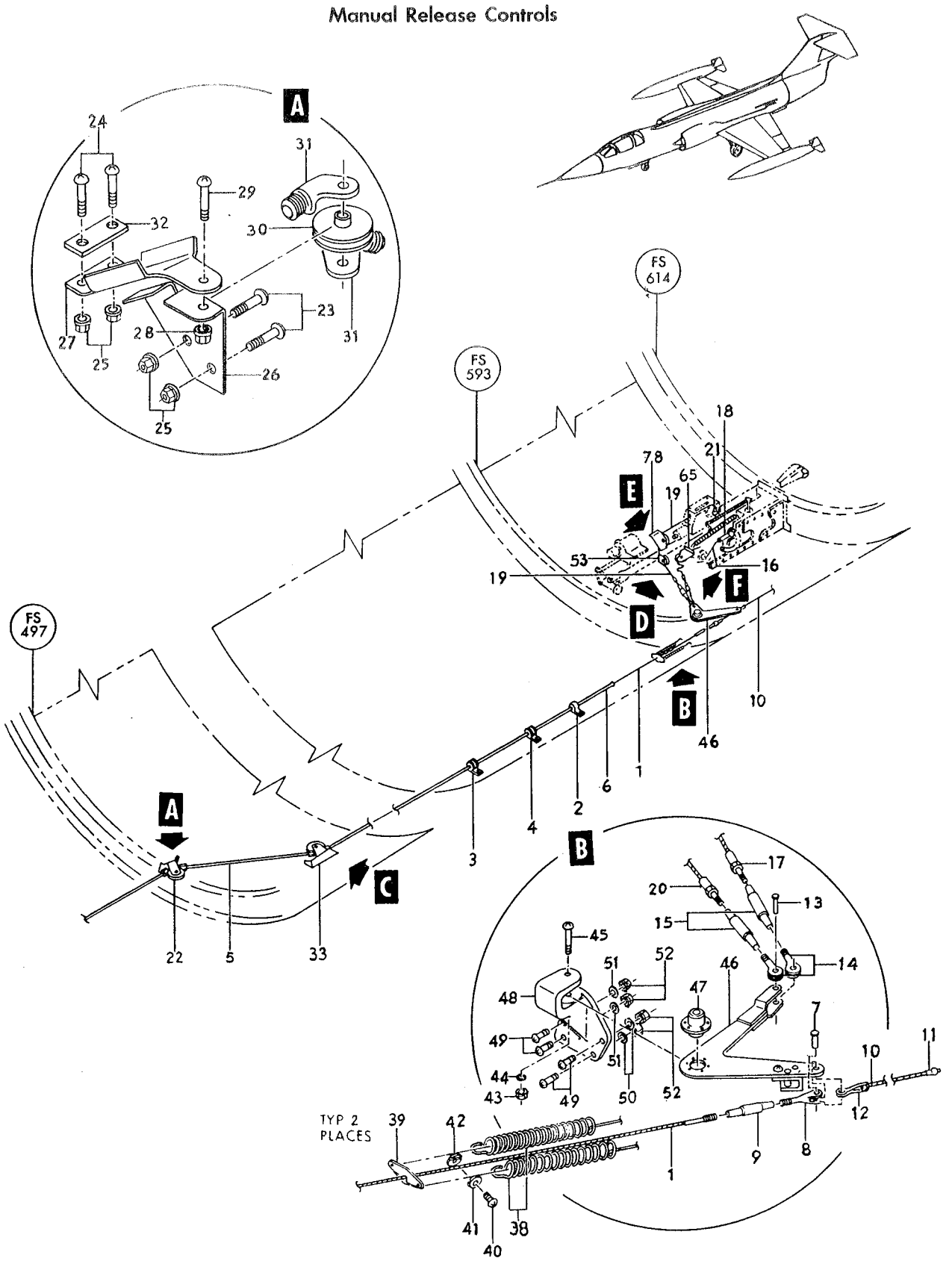

Figure 93—Drag Chute and Arrestor Hook Release Fuselage Station 497 to 614 (Sheet 1 of 2)

Manual Release Controls

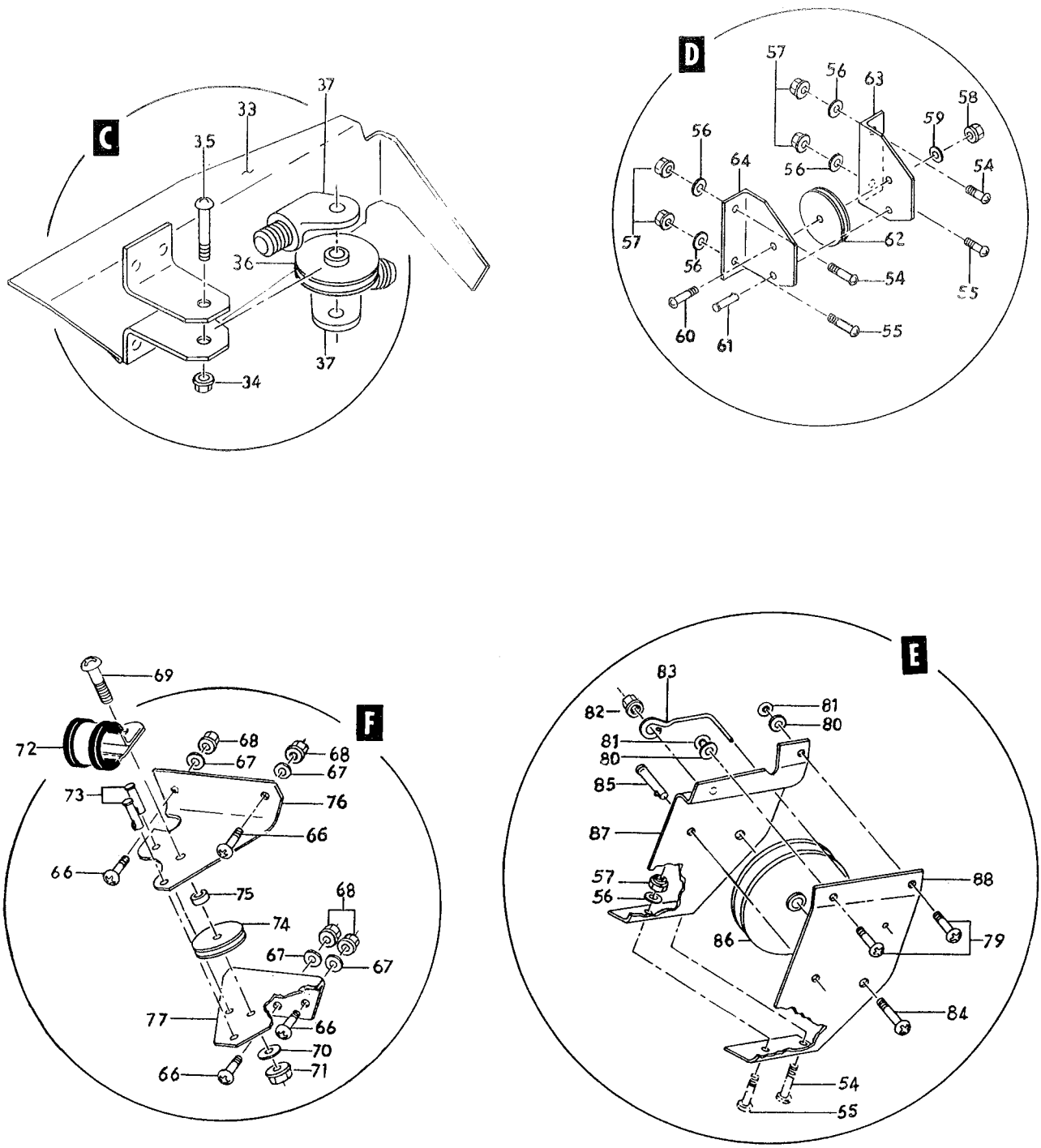

Figure 93—Drag Chute and Arrestor Hook Release Fuselage Station 497 to 614 (Sheet 2 of 2)

Figura e particolare	NDR	1 2 3 4 5 6 7 DENOMINAZIONE	Quant.	Codice applicab.
		Attaching Parts		
93-33	NAS623-3-4	SCREW (80205)	2	
	MS21042L3	NUT (96906)	2	
		*		
-34	MS21042L3	NUT (96906)	1	
-35	NAS623-3-11	SCREW (80205)	1	
-36	M1B	PULLEY (83451)	1	
-37	2CD2473	BRACKET (02413)	2	
	773542-1	SPRING INSTL, fuselage station 593 drag chute cable (NHA 849138-101)	1	
-38	106	SPRING, drag chute cable (71447)	2	
-39	765101	SPRING ATTACHMENT, fuselage station 593 drag chute cable	2	
-40	NAS623-3-2	SCREW (80205)	1	
-41	LS2823-2	CABLE LOCK, 3/32 (36659)	1	
-42	LS2823-3	CABLE LOCK, 3/32 (36659)	1	
	786687-101	CONTROL INSTL, fuselage station 600 drag chute and arrestor hook release *(see fig. 31 for reqd)*	REF	
-43	MS21042L4	NUT (96906)	1	
-44	AN960-416	WASHER (88044)	1	
-45	NAS623-4-18	SCREW (80205)	1	
-46	786692-501	BELLCRANK ASSY, fuselage station 600 drag chute and arrestor hook release	1	
-47	AN218P4	BEARING (88044)	1	
-48	786975-1	SUPPORT, fuselage station 593 bellcrank drag chute and arrestor hook release	1	
		Attaching Parts		
-49	NAS623-3-7	SCREW (80205)	4	
-50	AN960-10L	WASHER (88044)	2	
-51	AN960-10	WASHER (88044)	2	
-52	MS21042L3	NUT (96906)	4	
		*		
-53	786689-1	BRACKET ASSY, outboard arrestor hook release	1	
		Attaching Parts		
-54	NAS623-3-3	SCREW (80205)	2	
-55	NAS623-3-8	SCREW (80205)	2	
-56	AN960-10L	WASHER (88044)	4	
-57	MS21042L3	NUT (96906)	4	
		*		
-58	MS21042L3	NUT (96906)	1	
-59	AN960-10	WASHER (88044)	1	
-60	NAS623-3-8	SCREW (80205)	1	
-61	NAS427K8	PIN (80205)	1	
-62	M1B	PULLEY (83451)	1	
-63	786689-5	BRACKET	1	
-64	786689-3	BRACKET	1	
-65	790470-1	BRACKET ASSY, fuselage station 600 drag chute release	1	
		Attaching Parts		
-66	NAS623-3-4	SCREW (80205)	4	
-67	AN960-10L	WASHER (88044)	4	
-68	MS21042L3	NUT (96906)	4	
		*		
-69	NAS623-3-9	SCREW (80205)	1	
-70	AN960-10L	WASHER (88044)	1	
-71	MS21042L3	NUT (96906)	1	
-72	TA4C69S8T	CLAMP (84971)	1	
-73	NAS427K11	PIN (80205)	2	
-74	M1B	PULLEY (83451)	1	
-75	NAS43DD3-8	SPACER (80205)	1	
-76	790470-3	BRACKET	1	
-77	790470-5	BRACKET	1	
-78	786690-1	BRACKET ASSY, inboard arrestor hook release	1	

Figura e particolare	NDR	DENOMINAZIONE 1 2 3 4 5 6 7	Quant.	Codice applicab.
		Attaching Parts		
93-79	NAS623-3-5	SCREW (80205)	2	
-80	AN960-10L	WASHER (88044)	2	
-81	MS21042L3	NUT (96906)	2	
-82	MS21042L4	NUT (96906)	1	
-83	LS6095-3	GUARD, pulley (36659)	1	
-84	NAS623-4-9	SCREW (80205)	1	
-85	NAS427K9	PIN (80205)	1	
-86	MS20219-4	PULLEY (96906)	1	
-87	786690-3	BRACKET	1	
-88	786690-5	BRACKET	1	

Figura e particolare	NDR	DENOMINAZIONE 1 2 3 4 5 6 7	Quant.	Codice applicab.
		DRAG CHUTE RELEASE FUSELAGE STATION 614 AFT		
94- 1	772093-133	. CABLE ASSY, drag chute release *(see fig. 93 for reqd)*	REF	
- 2	MS20664C3	. . TERMINAL (96906)	1	
	783162-101	. CONTROL INSTL, LH fuselage station 358 to 614 manual release systems *(see fig. 63 for reqd)*	REF	
- 3	RA2258-3	. . DISCONNECT, ball terminal (80097)	1	
	783162-3	. CONTROL INSTL, fuselage station 614 and aft manual release systems *(see fig. 32 for reqd)*	REF	
- 4	772093-137	. . CABLE ASSY, drag chute	1	
- 5	MS20664C3	. . . TERMINAL (96906)	1	
- 6	NAS650S3RH	. . . TERMINAL (80205)	1	
	764719	. . SPRING INSTL, fuselage station 640 drag chute cable	1	
- 7	763692	. . . SPRING ATTACHMENT, rudder cable	1	
- 8	726409-3	. . . SPRING, rudder cable	1	
- 9	MS21251B3L	. . BARREL (96906)	1	
	761166-4	. SPOTWELD ASSY, fuselage station 614 *(see fig. 32 for reqd)*	REF	
-10	726401-3	. . FAIRLEAD, rudder cable	2	
-11	LS1002	. . CLIP, fairlead bushing retainer (36659)	1	
-12	767970-101	. CABLE ASSY, fuselage station 639 drag chute *(see fig. 257 for reqd)*	REF	
-13	NAS650L3LH	. . TERMINAL (80205)	1	
-14	MS20664C3	. . TERMINAL (96906)	3	
	786155-1	. BRACKET INSTL, fuselage station 639 drag chute *(see fig. 32 for reqd)*	REF	
-15	786156-1	. . FAIRLEAD ASSY, drag chute	1	
-16	728391-1	. . . FAIRLEAD, drag chute cable	1	
-17	TA4C56H8T	. . . CLAMP, fairlead (84971)	1	
-18	786156-3	. . . BRACKET	1	
-19	786157-1	. . GUIDE ASSY, fuselage station 639 drag chute	1	
-20	MS20392-3C59	. . . PIN, flathead (96906)	1	
	MS24665-151	. . . COTTER PIN (96906)	1	
-21	725789	. . SPACER, drag chute bracket	2	
-22	766841-1	. . BRACKET ASSY, fuselage station 639 drag chute outbd	1	
		Attaching Parts		
-23	NAS623-3-4	. . SCREW (80205)	2	
-24	NAS623-3-2	. . SCREW (80205)	1	
-25	AN42B4A	. . BOLT (88044)	1	
-25A	AN960C10L	. . WASHER (88044)	2	
-26	MS21042L3	. . NUT (96906)	4	
		———————*———————		
-27	AN23-11	. . . BOLT (88044)	1	
-28	AN960-10	. . . WASHER (88044)	1	
-29	AN320-3	. . . NUT (88044)	1	
	MS24665-153	. . . COTTER PIN (96906)	1	
-30	M1BH	. . . PULLEY, control (83451)	1	
-31	NAS427K6	. . . PIN (80205)	2	
-32	766839-1	. . BRACKET ASSY, fuselage station 639 drag chute	1	
		Attaching Parts		
-33	NAS623-4-3	. . SCREW (80205)	1	
	AN960-416	. . WASHER (88044)	1	
	MS21042L4	. . NUT (96906)	1	
		———————*———————		
-34	AN23-11	. . . BOLT (88044)	1	
-35	AN960-10	. . . WASHER (88044)	1	
-36	AN320-3	. . . NUT (88044)	1	
	MS24665-153	. . . COTTER PIN (96906)	1	
-37	FL3C3	. . . BEARING, fairlead cable (21335)	1	
-38	NAS427K6	. . . PIN (80205)	1	
-39	766840-1	. BRACKET ASSY, fuselage station 639 inbd drag chute *(see fig. 257 for reqd)*	REF	
-40	766840-3	. . SUPPORT ASSY	1	
-41	AN23-16	. . BOLT (88044)	1	
-42	NAS43DD3-10	. . SPACER (80205)	2	
-43	AN960-10	. . WASHER (88044)	1	
-44	AN320-3	. . NUT (88044)	1	
	MS24665-153	. . COTTER PIN (96906)	1	
-45	M1BH	. . PULLEY, control (83451)	1	
-46	NAS427K11	. . PIN (80205)	1	

Manual Release Controls

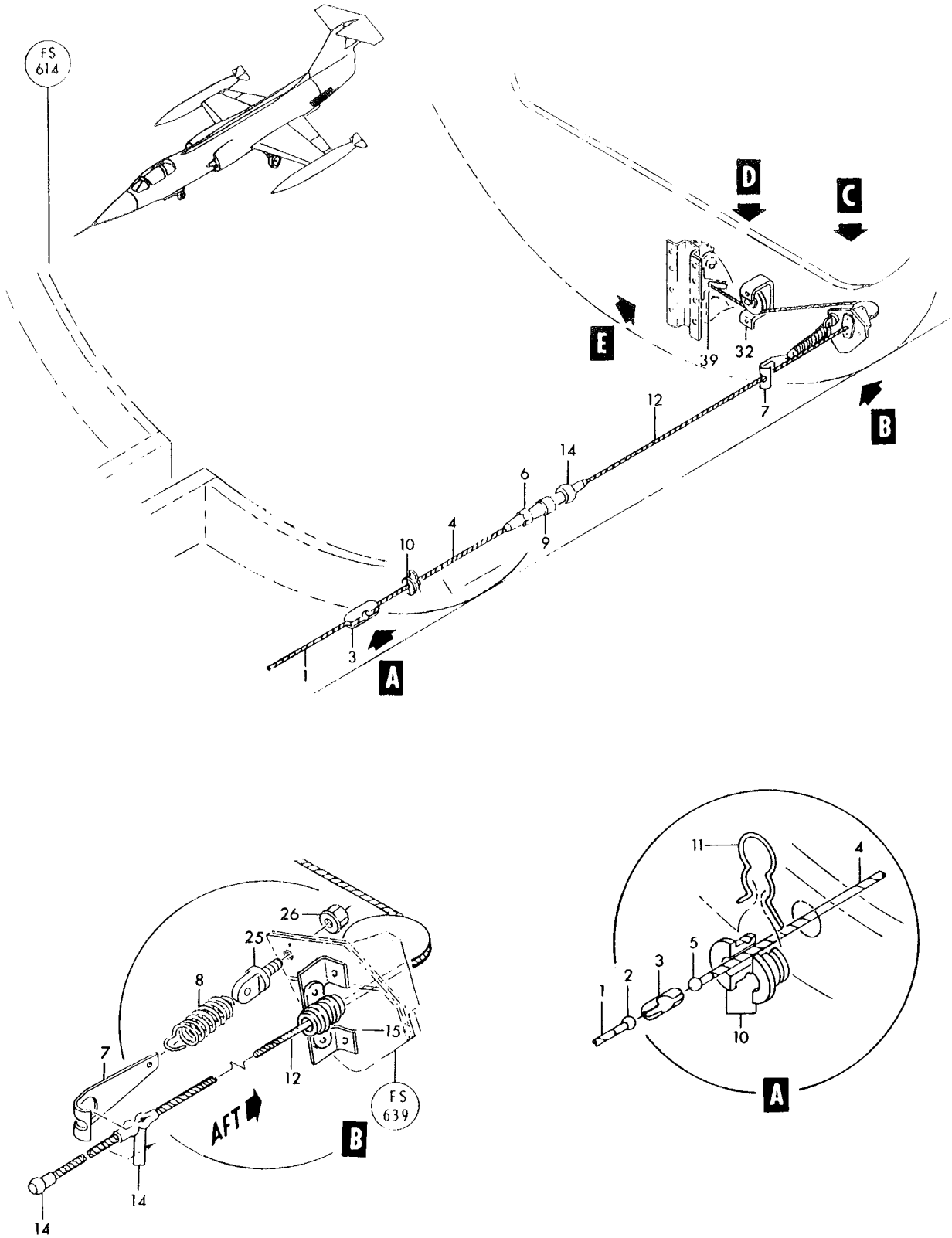

Figure 94—Drag Chute Release Fuselage Station 614 Aft (Sheet 1 of 2)

Manual Release Controls

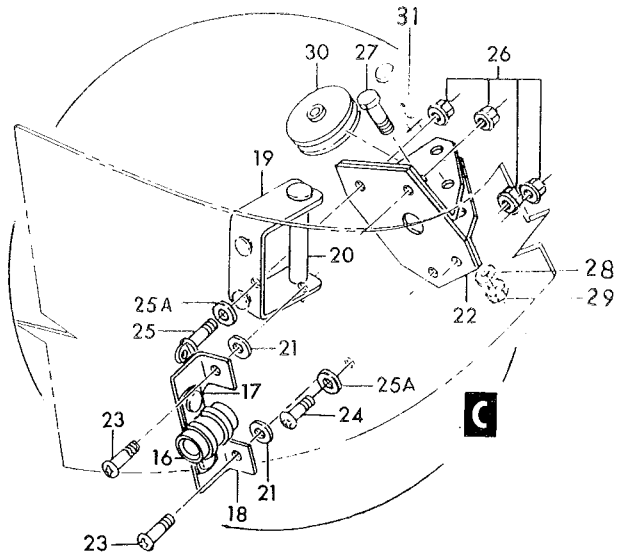

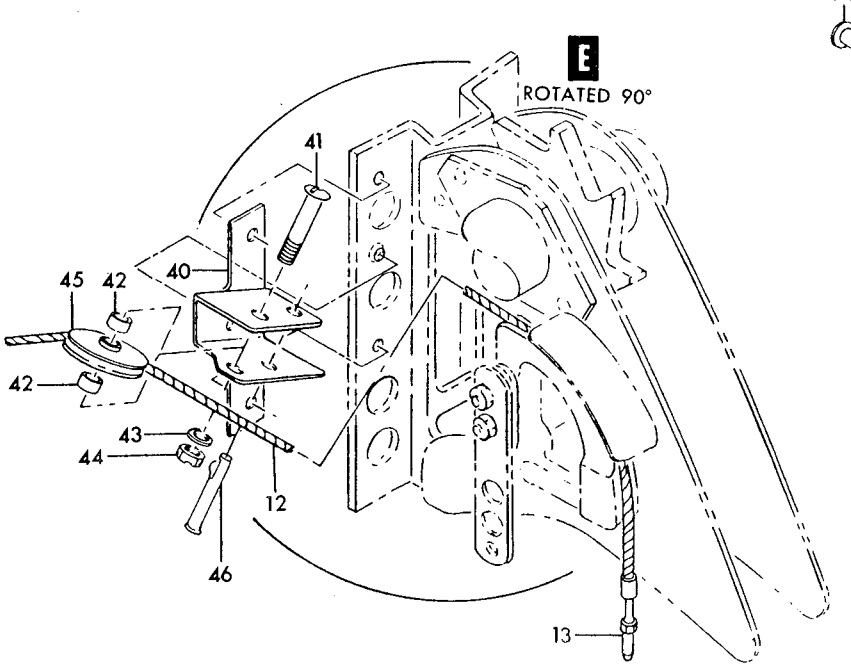

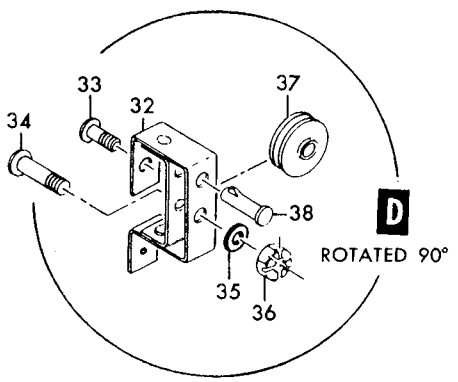

Figure 94—Drag Chute Release Fuselage Station 614 Aft (Sheet 2 of 2)

Figura e particolare	NDR	1 2 3 4 5 6 7 DENOMINAZIONE	Quant.	Codice applicab.
		ENGINE EXHAUST NOZZLE RELEASE MECHANISM		
95	799618-103	. CONTROL INSTL, fuselage station 184 to 358 nozzle area emergency manual release *(see fig. 63 for reqd)*	REF	
-1	21426-4630	. . PUSH-PULL ASSY, 4 inches travel positive position (78710) *(see fig. 222)*	1	
-2	799365-101	. . SHIM, emergency nozzle area control tapered	1	
-3	728350-1	. . WASHER, tapered engine exhaust nozzle emergency control	1	
-4	AN936A1016	. . WASHER (88044)	1	
-5	AN316-10R	. . NUT (88044)	1	
-6	765337-107	. . TUBE ASSY, after burner nozzle control	1	
-7	15489	. . CONNECTOR, line (78710)	2	
-8	765337-109	. . TUBE ASSY, after burner nozzle control	1	
-9	15490-1	. . CONNECTOR, bulkhead (78710)	2	
-10	765337-111	. . TUBE ASSY, after burner nozzle control *(see fig. 141)*	1	
-11	765337-113	. . TUBE ASSY, after burner nozzle control	1	
-12	799367-101	. . SEAL, fuselage station 310 emergency nozzle area control	1	
		Attaching Parts		
-13	AN515-4R4	. . SCREW (88044)	4	
-14	AN340-4	. . NUT (88044)	4	
		*		
-14A	799367-103	. . . PLATE, fuselage station 310 emergency nozzle area control (match comp do not stk sep)	1	
-14B	799367-104	. . . PLATE, fuselage station 310 emergency nozzle area control (match comp do not stk sep)	1	
-14C	MS21919DG4	. . CLAMP (96906)	1	
-14D	MS21919DG10	. . CLAMP (96906)	1	
	NAS603-8P	. . SCREW (80205)	1	
	MS21042L3	. . NUT (96906)	1	
-14E	762968-89	. TUBE ASSY, ram air turbine release *(see fig. 89 for reqd)*	REF	
	799617-101	. CONTROL INSTL, fuselage station 358 to 505 nozzle area emergency manual release *(see fig. 58 for reqd)*	REF	
-15	765337-19	. . TUBE ASSY, after burner nozzle control	1	
-16	C7505	. . CONNECTOR, conduit (78710)	2	
-17	NAS623-3-10	. . SCREW (80205)	2	
-18	AN960-10L	. . WASHER (88044)	2	
-19	MS21024L3	. . NUT (96906)	2	
-20	765337-21	. . TUBE ASSY, after burner nozzle control	1	
	785762-101	. . SEAL INSTL, firewall nozzle area emergency control	1	
-21	784910-1	. . . SEAL ASSY, firewall emergency exhaust nozzle control	2	
		Attaching Parts		
-22	AN515-8R8	. . . SCREW (88044)	2	
		*		
-23	MS21042L08	. . . NUT (96906)	2	
-24	AN960C8	. . . WASHER (88044)	2	
-25	AN515-8R8	. . . SCREW (88044)	2	
-25A	789-4	A. . CLAMP (83930)	1	
		Attaching Parts		
-25B	AN520-10R8	A. . SCREW (88044)	2	
-25C	MS21042L3	A. . NUT (96906)	2	
		*		
	799617-103	. CONTROL INSTL, fuselage station 505 to 579 nozzle area emergency manual release *(see fig. 63 for reqd)*	REF	
-26	15489	. . CONNECTOR, line (78710)	1	
-27	765337-23	. . TUBE ASSY, after burner nozzle control	1	
-28	17549	. . CONNECTOR, hi-eff conduit thin wall (78710)	2	
-29	MS21042L3	. . NUT (96906)	2	
-30	AN960-10L	. . WASHER (88044)	2	
-31	NAS623-3-10	. . SCREW (80205)	2	
-32	765337-25	. . TUBE ASSY, after burner nozzle control	1	
-33	17585-1	. . ADAPTER, 20 deg gland cavity to thin wall conduit (78710)	1	
-34	C7744-32	. . TELESCOPIC UNIT ASSY, 5/16-24 unf 3A thread end flared type (78710)	1	

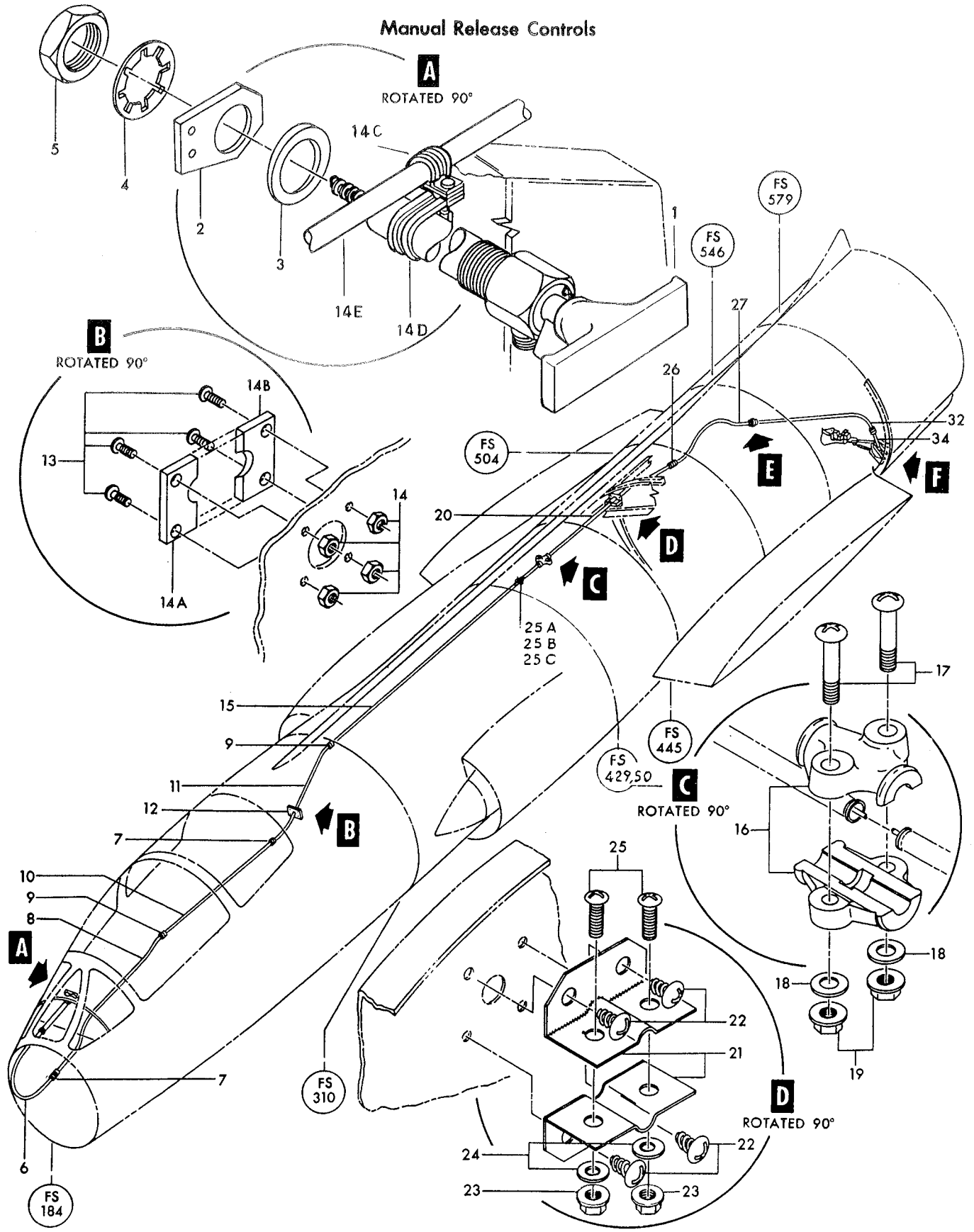

Figure 95—Engine Exhaust Nozzle Release Mechanism (Sheet 1 of 2)

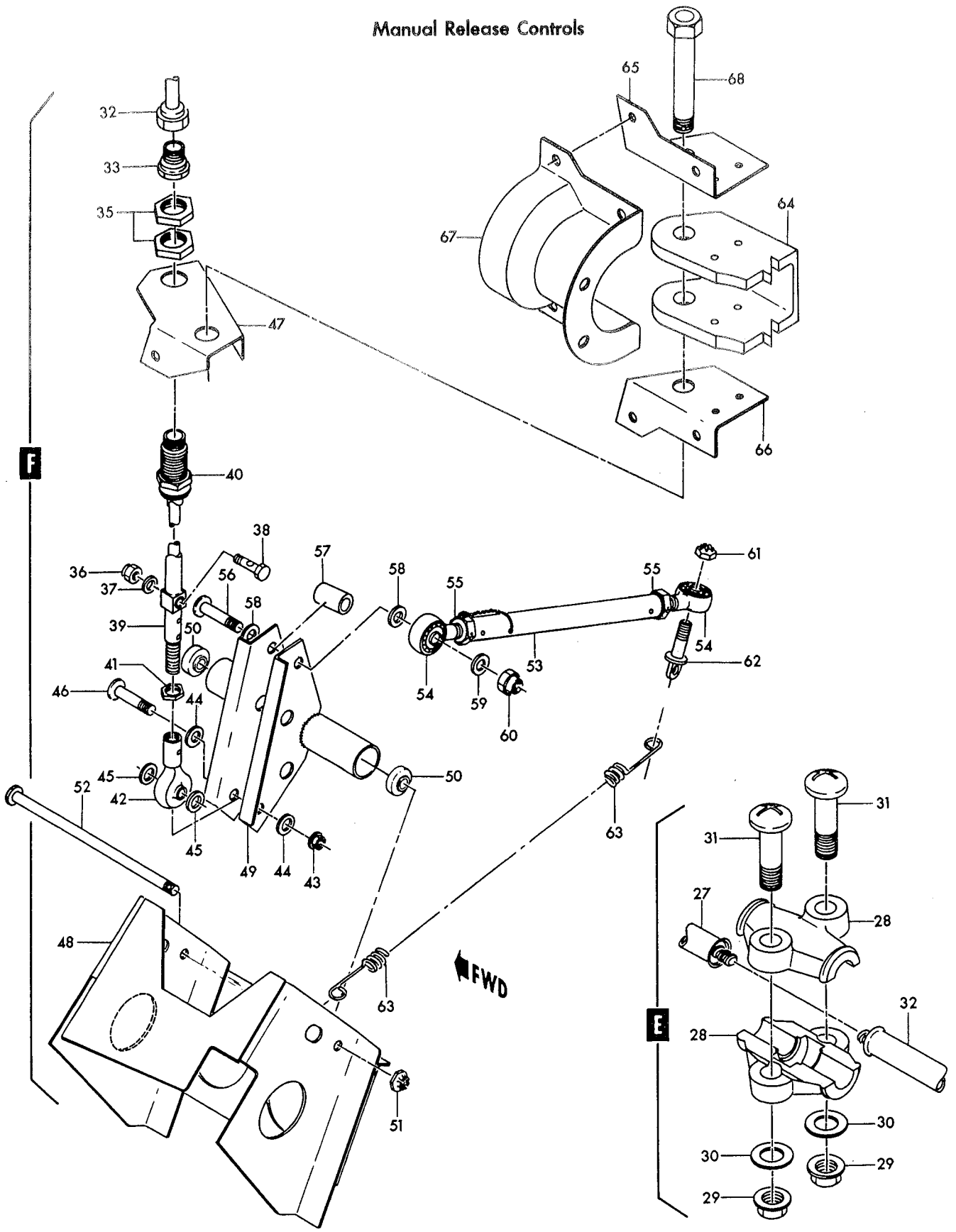

Figure 95—Engine Exhaust Nozzle Release Mechanism (Sheet 2 of 2)

Figura e particolare	NDR	DENOMINAZIONE (1 2 3 4 5 6 7)	Quant.	Codice applicab.
95-35	85511	NUT, mounting (78710)	2	
-36	AN363C1032	NUT (88044)	1	
-37	AN960C10	WASHER (88044)	1	
-38	85034	PLUG (78710)	1	
-39	C7904-32	END ASSY, sliding (78710)	1	
-40	C6248-32	SWIVEL ASSY, flared conduit type telescopic unit (78710)	1	
-41	AN316-5R	NUT (88044)	1	
-42	RE4F5	BEARING, rod end (21335)	1	
-43	MS21042L4	NUT (96906)	1	
-44	AN960-416L	WASHER (88044)	2	
-45	AN960-416	WASHER (88044)	2	
-46	NAS623-4-14	SCREW (80205)	1	
	784919-1	BRACKET INSTL, fuselage station 572 emergency nozzle area control *(see fig. 63 for reqd)*	REF	
-47	784915-1	BRACKET, fuselage station 579 emergency nozzle area control	1	
-48	784916-1	BRACKET ASSY, emergency nozzle area control fuselage station 572	1	
-49	784917-1	BELLCRANK ASSY, fuselage station 572 nozzle area control	1	
-50	AN201KP4A	BEARING (88044)	2	
	MS24665-134	COTTER PIN (96906)	1	
-51	AN310-4	NUT (88044)	1	
-52	NAS1104-82D	BOLT (80205)	1	
	784918-1	ROD ASSY, emergency nozzle area control	1	
-53	784918-3	TUBE	1	
-54	RE4M6	BEARING, rod end (21335)	2	
-55	NAS509-6	NUT (80205)	2	
-56	NAS1104-26D	BOLT (80205)	1	
-57	NAS43-4-50	SPACER (80205)	1	
-58	AN970-4	WASHER (88044)	2	
-59	AN960-416	WASHER (88044)	1	
-60	AN310-4	NUT (88044)	1	
	MS24665-134	COTTER PIN (96906)	2	
-61	AN310-4	NUT (88044)	1	
-62	AN43B-11	BOLT, eye (88044)	1	
-63	726409-3	SPRING, rudder cable	1	
-64	761257	SUPPORT ASSY, dive flap cylinder *(see fig. 58 for reqd)*	REF	
-65	767762-3	CLIP, dive flap cylinder *(see fig. 58 for reqd)*	REF	
-66	767762-4	CLIP, dive flap cylinder *(see fig. 58 for reqd)*	REF	
-67	767761-1	CAP, dive flap cylinder seal *(see fig. 58 for reqd)*	REF	
-68	NAS1108-38D	BOLT (80205) *(see fig. 58 for reqd)*	REF	

A - Reqd per AA.1F-104S-OT-160

Figura e particolare	NDR	DENOMINAZIONE 1 2 3 4 5 6 7	Quant.	Codice applicab.
		SINGLE POINT REFUELING ADAPTER AND DRAIN		
96	774030-101	. ADAPTER INSTL, single point pressure fueling (LH only) *(see fig. 30 for reqd)*	REF	
	774030-103	. . FLOW LIMITER AND ADAPTER ASSY, single point pressure fueling	1	
		Attaching Parts		
	NAS1203-5	. . SCREW (80205)	16	
		☼		
-1	SM2352	. . . CAP AND ADAPTER ASSY, pressure fuel servicing (A0303) (6417 is an alternative)	1	
	6417	. . . CAP AND ADAPTER ASSY, pressure fuel servicing (86090) (Lockheed spec dwg 634241-9) (SM2352 is an alternate) (see T.O. 6J18-2-6-3)	REF	
-2	SM2353	. . . FLOW LIMITER, pressure fueling (A0303) (6195-1 is an alternate)	1	
	6195-1	. . . FLOW LIMITER, pressure fueling (86090) (Lockheed spec dwg 634179-3) (SM2353 is an alternate) (see T.O. 6J11-21-3)	REF	
-3	MS29513-232	. . . PACKING (96906)	1	
-4	MS29512-6	. . GASKET (96906)	1	
-5	AN815-6D	. . UNION (88044)	1	
	774030-3	. TUBE INSTL, single point pressure fueling (LH only) *(see fig. 30 for reqd)* .	REF	
-6	785201-37	. . TUBE ASSY, fuel single point refueling drain	1	
-7	785201-35	. . TUBE ASSY, fuel auxiliary tank filler drain	1	
-8	TA4C74D6T	. . CLAMP, loop type support (84971)	6	
		Attaching Parts		
-9	AN520-10R8	. . SCREW (88044)	1	
-10	AN520-10R10	. . SCREW (88044)	1	
-11	NAS43DD3-12	. . SPACER (80205)	1	
	AN960D10	. . WASHER (88044)	1	
	MS21042L3	. . NUT (96906)	1	
		☼		
	774030-5	. DRAIN PORT INSTL, single point pressure fueling (LH only) *(see fig. 30 for reqd)*	REF	
-12	774163-1	. . DRAIN PORT ASSY, auxiliary tank (refueling)	1	
-13	MS29512-6	. . GASKET (96906)	1	
-14	740B8X	. . VALVE, poppet drain (91511) (Lockheed spec dwg 634178-1) . . .	1	
	784380-1	A. TANK INSTL, fuselage auxiliary fuel (NHA 849138-101) *(see fig. 100)*. . .	1	
	784380-105	B. TANK INSTL, fuselage auxiliary fuel (NHA 849138-101) *(see fig. 100)* . .	1	
-15	MS29513-244	. . PACKING (96906)	1	
	769393-101	. . FILLER INSTL, auxiliary fuel tank adapter and drain	1	
-16	FV400-23-4	. . . CAP AND ADAPTER ASSY, fuel tank (98817) (Lockheed spec dwg 633973-101) (see T.O. 6J18-2-2-23)	1	
		Attaching Parts		
-17	AN960-416L	. . . WASHER (88044)	6	
-18	MS21042L4	. . . NUT (96906)	6	
		☼		
		Partial breakdown follows		
	FV656-3-4	. . . . COVER ASSY, fuel tank (98817)	1	
	KF400-23-4	. . . REPAIR KIT, filler cap and adapter field (98817) (reqd on FV400-23-4) .	1	
-19	MS29512-8	. . . GASKET (96906)	1	
-20	AN919-12D	. . . REDUCER (88044)	1	
-21	778345-1	. MANIFOLD ASSY, air refueling and fuel transfer *(see fig. 109 for reqd)* .	REF	
-22	LS972-265	. . DECAL (36659)	1	
	769393-5	. RECEPTACLE INSTL, auxiliary fuel tank adapter and drain *(see fig. 152 for reqd)*	REF	
-23	762313	. . SUPPORT, fuel tank filler grounding jack	1	
		Attaching Parts		
	AN507-1032R8	. . SCREW (88044)	2	
	AN960D10	. . WASHER (88044)	2	
	MS21042L3	. . NUT (96906)	2	
		☼		
-24	AN3117-1	. . RECEPTACLE (88044)	1	

A - Only for FB
B - Only for AWX

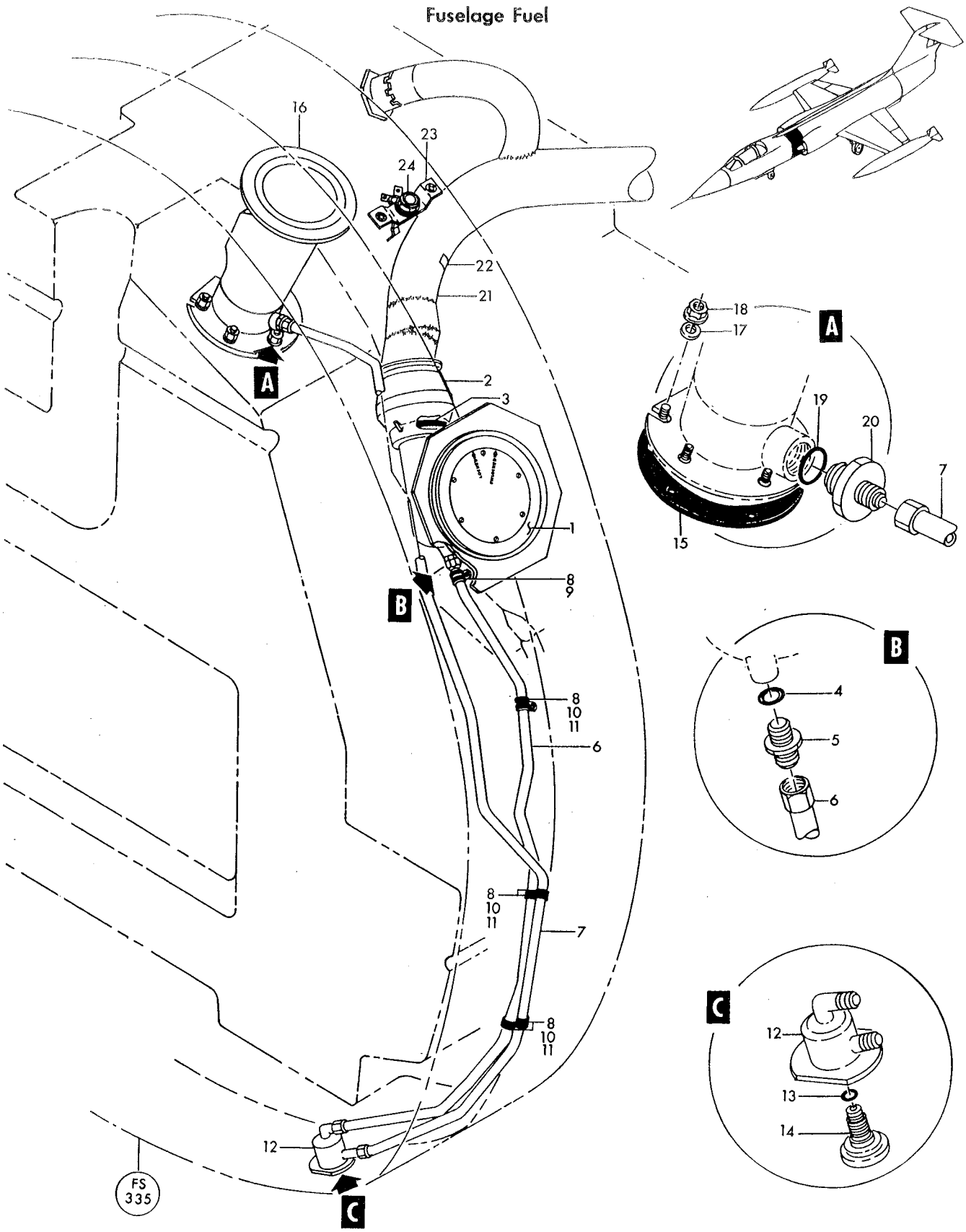

Figure 96—Single Point Refueling Adapter and Drain

Figura e particolare	NDR	1 2 3 4 5 6 7 DENOMINAZIONE	Quant.	Codice applicab.
		AMMUNITION COMPARTMENT FUEL TANK		
97	850191-105	E. CONVERSION KIT, gun to fuel tanks *(see fig. 260 for reqd)*	REF	
- 1	NAS27-5-24	B. . TURNBUCKLE (80205)	2	
	783285-103	F. . COVER ASSY, ammunition compartment fuel (NHA 783285-101) *(see fig. 30 for reqd)*	REF	
	783285-3	E. . COVER ASSY, ammunition compartment fuel	1	
		Attaching Parts		
- 2	AN960D416	B. . WASHER (88044)	14	
- 3	MS21042L4	B. . NUT (96906)	14	
		——————☼——————		
- 4	779436-1	. . . COVER ASSY, ammunition compartment fuel tank manhole	1	
- 5	FG200A48	. . . TRANSMITTER, (TR5) flange mounted liquid quantity fuel (A0019) (94580) (Lockheed spec dwg 624384-7) (see T.O. 5L14-3-21-23)	1	
		Attaching Parts		
- 6	AN960D416	. . . WASHER (88044)	5	
- 7	MS21042L4	. . . NUT (96906)	5	
		——————☼——————		
- 8	MS29513-227	. . . PACKING (96906)	1	
- 9	779301-1	. . . FITTING, ammunition bay tank inlet	1	
		Attaching Parts		
- 10	AN960D416	. . . WASHER (88044)	4	
- 11	MS21042L4	. . . NUT (96906)	4	
		——————☼——————		
- 12	MS29513-228	. . . PACKING (96906)	1	
- 13	787215-1	. . . SPACER ASSY, ammunition compartment tank pressure fueling valve	1	
		Attaching Parts		
	AN960D416	. . . WASHER (88044)	4	
	MS21042L4	. . . NUT (96906)	4	
		——————☼——————		
- 14	MS29513-228	. . . PACKING (96906)	2	
- 15	AN924-12D	. . . NUT (88044)	1	
- 16	AN833-12D	. . . ELBOW (88044) (only to 783285-3)	1	
	AN929-12	. . . ELBOW (88044) (only to 783285-103)	1	
- 17	MS29512-12	. . . GASKET (96906)	1	
- 18	728145-1	. . . UNION, fuel tank cover (altered from AN832-6D)	1	
- 19	AN924-6D	. . . NUT (88044)	1	
- 20	MS29512-6	. . . GASKET (96906)	1	
- 21	AN919-6D	. . . REDUCER (88044)	2	
- 22	MS29512-6	. . . GASKET (96906)	2	
- 23	8-557-1	. . . VALVE, pressure fueling level control (82267) (Lockheed spec dwg 634180-1) (see T.O. 6J15-10-138-3)	1	
		Attaching Parts		
- 24	AN4-7A	. . . BOLT (88044)	4	
- 25	AN960D416	. . . WASHER (88044)	4	
- 26	MS21042L4	. . . NUT (96906)	4	
		——————☼——————		
- 27	787216-1	. . . FITTING, ammunition compartment tank vent	1	
		Attaching Parts		
- 28	AN960D416	. . . WASHER (88044)	3	
- 29	MS21042L4	. . . NUT (96906)	3	
		——————☼——————		
- 30	787221-1	. . . SPACER, ammunition compartment tank vent float valve	1	
		Attaching Parts		
- 31	AN960D416	. . . WASHER (88044)	3	
- 32	MS21042L4	. . . NUT (96906)	3	
		——————☼——————		
- 33	11-954-51	. . . VALVE, vent fuel tank float (A0303) (82267) (Lockheed spec dwg 633953-3) (see T.O. 6J15-5-30-3)	1	

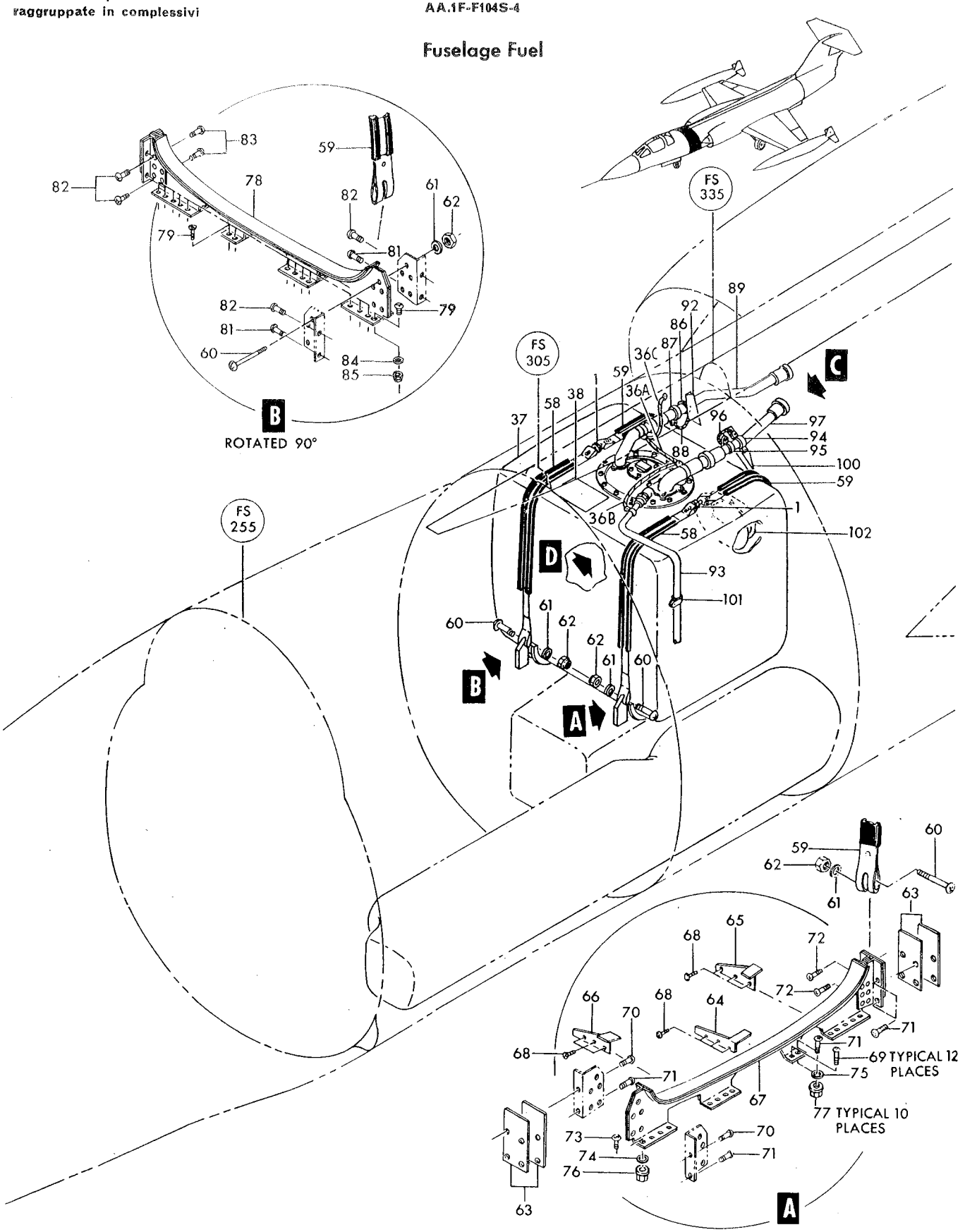

Figure 97—Ammunition Compartment Fuel Tank (Sheet 1 of 2)

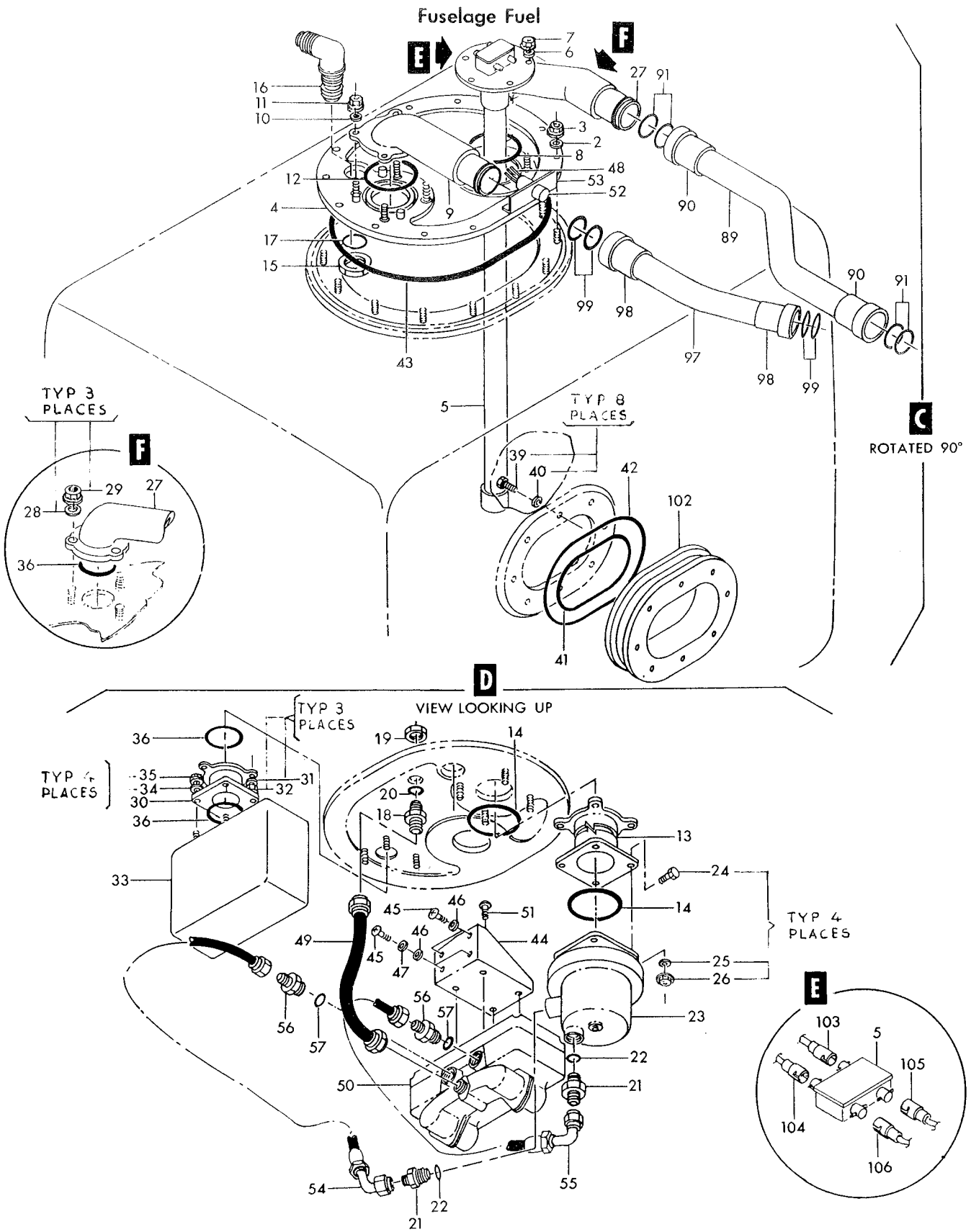

Figure 97—Ammunition Compartment Fuel Tank (Sheet 2 of 2)

Figura e particolare	NDR	1	2	3	4	5	6	7	DENOMINAZIONE	Quant.	Codice applicab.
									Attaching Parts		
97-34	AN960D416								WASHER (88044)	4	
-35	MS21042L4								NUT (96906)	4	
									✲		
- 36	MS29513-223								PACKING (96906)	3	
- 36A	MS25083-1BB10								JUMPER (96906)	1	6741-
- 36B	MS25083-1BB12								JUMPER (96906) (only 783285-3)	1	6741-
- 36C	MS25083-1BB15								JUMPER (96906)	1	6741-
- 37	783282-1	B.							TANK ASSY, ammunition compartment fuel *(see fig. 98)*	1	
- 38	779081-1	B.							NAMEPLATE, fuel cell	1	
- 39	AN4-5A	B.							BOLT (88044)	8	
- 40	AN960D416	B.							WASHER (88044)	8	
- 41	MS29513-246	B.							PACKING (96906)	1	
- 42	MS29513-259	B.							PACKING (96906)	1	
- 43	MS29513-273	B.							PACKING (96906)	1	
- 44	787331-5	B							BRACKET ASSY, ammunition compartment tank pilot float valve	1	6701-6720
	787331-101	B.							BRACKET ASSY, ammunition compartment tank pilot float valve	1	6721-
									Attaching Parts		
- 45	NAS623-3-4	B.							SCREW (80205)	4	6701-6820
	NAS1103-5	B.							SCREW (80205)	4	6821-
- 46	AN960C10	B.							WASHER (88044)	4	
- 47	LS881-4	B.							WASHER, plain aluminum (36659)	2	
									✲		
- 48	786608-1	B.							HARNESS ASSY, ammunition compartment fuel level control valve	1	
- 49	601392-6D0180	B.							HOSE ASSY, fuel level control valve (00624)	1	
- 50	6-256-61	B.							VALVE, (L2) fuel level control pilot float (82267) (Lockheed spec dwg 634234-1) (see T.O. 6J15-5-25-3)	1	
									Attaching Parts		
- 51	NAS623-4-2	B.							SCREW (80205)	4	
									✲		
- 52	CA3100KE10SL3P	B.							CONNECTOR, (J84) receptacle (P-135 disconnect) (71468)	1	
									Attaching Parts		
	AN500A4-6	B.							SCREW (88044)	4	
	MS21042L04	B.							NUT (96906)	4	
									✲		
	MS3057-4A	B.							ADAPTER (96906)	1	
- 53	787683-1	B.							BRACKET, ammunition compartment tank electrical receptacle	1	
- 54	601396-4-0150	B.							HOSE ASSY, (fuel level control valve) (00624)	1	
- 55	601396-4-0200	B.							HOSE ASSY, (fuel level control valve) (00624)	1	
- 56	AN919-10D	B.							REDUCER (88044)	2	
- 57	MS29512-8	B.							GASKET (96906)	2	
- 58	786165-1	B.							STRAP ASSY, fuel tank	2	
- 59	786165-3	B.							STRAP ASSY, fuel tank	2	
									Attaching Parts		
- 60	AN25-20	B.							BOLT (88044)	1	
- 61	AN960D516	B.							WASHER (88044)	1	
- 62	AN320-5	B.							NUT (88044)	1	
									✲		
- 63	786192-1	C.							SHIM, ammunition compartment fuel tank cradle	AR	
- 64	783769-1	C.							BRACE, fuselage station 322 ammunition compartment fuel tank cradle	1	
- 65	783770-1	C.							BRACE, fuselage station 328 ammunition compartment fuel tank cradle	1	
- 66	778197-1	C.							BRACE, fuselage station 315 ammunition compartment fuel tank cradle	1	
- 67	778193-101	C.							CRADLE ASSY, bl 8 left hand ammunition compartment fuel tank	1	
									Attaching Parts		
- 68	NAS623-3-2	C.							SCREW (80205)	9	
- 69	NAS623-3-3	C.							SCREW (80205)	12	
- 70	NAS623-3-4	C.							SCREW (80205)	2	
- 71	NAS623-3-5	C.							SCREW (80205)	5	
- 72	NAS623-3-6	C.							SCREW (80205)	2	
- 73	NAS623-4-3	C.							SCREW (80205)	1	
- 74	LS6061-416L	C.							WASHER, plain (36659)	1	

Figura e particolare	NDR	1	2	3	4	5	6	7	DENOMINAZIONE	Quant.	Codice applicab.
97- 75	AN960D10L	C.							WASHER (88044)	1	
- 76	MS21042L4	C.							NUT (96906)	1	
- 77	MS21042L3	C.							NUT (96906)	10	
									✲		
- 78	778194-101	C.							CRADLE ASSY, LB 8 right hand ammunition compartment fuel tank	1	
									Attaching Parts		
- 79	NAS623-3-3	C.							SCREW (80205)	28	
- 81	NAS623-3-4	C.							SCREW (80205)	2	
- 82	NAS623-3-7	C.							SCREW (80205)	4	
- 83	NAS623-3-8	C.							SCREW (80205)	2	
- 84	NAS1197-10	C.							WASHER (80205)	1	
- 85	MS21042L3	C.							NUT (96906)	1	
									✲		
- 86	TA4C68D24P	A.							CLAMP, nylon insert (84971)	1	
									Attaching Parts		
	AN520-10R10	A.							SCREW (88044)	2	
	AN960D10	A.							WASHER (88044)	2	
									✲		
- 87	AN735D24	A.							CLAMP (88044)	1	
- 88	MS25083-1BB3	A.							JUMPER (96906)	1	
									Attaching Parts		
	AN520-10R10	A.							SCREW (88044)	1	
	AN960D10	A.							WASHER (88044)	1	
	AN345-10	A.							NUT (88044)	1	
	MS21042L3	A.							NUT (96906)	1	
									✲		
- 89	785201-33	A.							TUBE ASSY, fuel vent *(see fig. 109)*	1	
- 90	3605-24D	A.							COUPLING, flexible (79326)	2	
- 91	MS29513-325	A.							PACKING (96906)	4	
- 92	787223-1	A.							BRACKET ASSY, fuselage station 335 vent tube clamp	1	
- 93	785201-3	.							TUBE ASSY, fuel vent *(see fig. 99)*	1	
- 94	TA4C68D24P	A.							CLAMP, nylon insert (84971)	1	
									Attaching Parts		
	AN520-10R10	A.							SCREW (88044)	2	
	AN960D10	A.							WASHER (88044)	2	
									✲		
- 95	AN735D24	A.							CLAMP (88044)	1	
- 96	MS25083-1BB3	A.							JUMPER (96906)	1	
									Attaching Parts		
	AN520-10R10	A.							SCREW (88044)	1	
	AN960D10	A.							WASHER (88044)	1	
	AN345-1D	A.							NUT (88044)	1	
	MS21042L3	A.							NUT (96906)	1	
									✲		
- 97	778344-1	A.							TUBE ASSY, ammunition compartment tank fuel transfer *(see fig. 109)*	1	
- 98	3605-24D	A.							COUPLING, flexible (79326)	2	
- 99	MS29513-325	A.							PACKING (96906)	4	
-100	784154-1	A.							BRACKET ASSY, fuselage station 335 refueling tube clamp	1	
-101	AN742D12	A.							CLAMP (88044)	1	
									Attaching Parts		
	AN515-8R14	A.							SCREW (88044)	1	
	NAS43DD3-28	A.							SPACER (80205)	1	
	AN960D8	A.							WASHER (88044)	1	
	778474-1	.							SPACER ASSY, ammunition compartment and auxiliary fuel tank interconnect *(see fig. 100 for reqd)*	REF	
-102	778474-3	.							SPACER, ammunition compartment and auxiliary fuel tank interconnect	1	
	NAS1222-4D	.							INSERT (80205)	16	
	849652-101	D.							HARNESS ASSY, case stowage to ammunition compartment fuel quantity *(see fig. 184 for reqd)*	REF	
-103	1-672-1	D.							CONNECTOR, (P95) plug (ammunition compartment fuel quantity transmitter) (95712)	1	

Figura e particolare	NDR	1 2 3 4 5 6 7 DENOMINAZIONE	Quant.	Codice applicab.
97-104	1-690-1	D. . CONNECTOR, (P94) plug (ammunition compartment fuel quantity transmitter) (95712)	1	
	849648-101	. HARNESS ASSY, ammunition compartment fuel quantity *(see fig. 193 for reqd)*	REF	
-105	1-672-1	. . CONNECTOR, (P95) plug (ammunition compartment fuel quantity transmitter) (95712)	1	
-106	1-690-1	. . CONNECTOR, (P94) plug (ammunition compartment fuel quantity transmitter) (95712)	1	

A - All parts marked with letter A serve also to install fuel tanks in basic aircraft in lieu of bay conversion kit (NHA 783534-101) *(see fig. 30 for reqd)*
B - All parts marked with letter B serve also to install fuel tanks in basic aircraft in lieu of bay conversion kit (NHA 783285-101) (NHA 783285-105) *(see fig. 30 for reqd)*
C - All parts marked with letter C serve also to install fuel tanks in basic aircraft in lieu of bay conversion kit (NHA 778381-101) *(see fig. 30 for reqd)*
D - All parts marked with letter D serve also for gun to fuel tanks conversion kit 850101-105
E - Only for FB
F - Only for AWX

Figura e particolare	NDR	1 2 3 4 5 6 7	DENOMINAZIONE	Quant.	Codice applicab.
			CASE STOWAGE COMPARTMENT AUXILIARY FUEL TANK AND ATTACHMENTS		
98	850191-105	H.	CONVERSION KIT, gun to fuel tanks *(see fig. 260 for reqd)*	REF	
- 1	784148-1	A.	INTERCOSTAL ASSY, fuselage station 330 case stowage compartment fuel tank support LH	1	
- 2	784148-2	A.	INTERCOSTAL ASSY, fuselage station 330 case stowage compartment fuel tank support RH	1	
			Attaching Parts		
- 3	NAS623-3-2	A.	SCREW (80205)	3	
- 4	NAS623-3-3	A.	SCREW (80205)	2	
- 5	777926-1	A.	CRADLE ASSY, fuselage station 315 case stowage tank	1	
			Attaching Parts		
- 6	NAS623-3-8	A.	SCREW (80205)	6	
- 7	NAS623-3-5	A.	SCREW (80205)	5	
- 8	AN960D10	A.	WASHER (88044)	6	
- 9	LS881-2	A.	WASHER, aluminum plain (36659)	5	
-10	777927-1	A.	CRADLE ASSY, fuselage station 330 case stowage tank	1	
			Attaching Parts		
-11	NAS623-3-4	A.	SCREW (80205)	6	
-12	NAS623-3-5	A.	SCREW (80205)	2	
-13	NAS623-3-12	A.	SCREW (80205)	2	
-14	AN960D10	A.	WASHER (88044)	5	
-15	LS881-2	A.	WASHER, aluminum plain (36659)	3	
-16	740B7	B.	VALVE, poppet drain (91511) (Lockheed spec dwg 633971-7) (see T.O. 6J15-4-56-3)	1	
-17	MS29512-6	B.	GASKET (96906)	3	
-18	AN939D6	B.	ELBOW (88044)	1	
-19	AN924-6D	B.	NUT (88044)	2	
-20	AN960D916	B.	WASHER (88044)	2	
-21	AN832-6D	B.	UNION (88044)	1	
-22	MS25083-1BC6	B.	JUMPER (96906)	1	
-23	774152-117	B.	TUBE ASSY, fuel tank drain	1	
-24	791469-1	B.	COVER ASSY, case stowage compartment fuel tank	1	
			Attaching Parts		
-25	AN960D416	B.	WASHER (88044)	12	
-26	MS21042L4	B.	NUT (96906)	12	
-27	MS29513-263	B.	PACKING (96906)	1	
-28	AN833-6D	B.	ELBOW (88044)	1	
-30	FG200C3	B.	TRASMITTER, (TR6) flange mounted fuel liquid quantity (A0019) (94580) (Lockheed spec dwg 624384-5) (see T.O. 5L14-3-21-23)	1	
			Attaching Parts		
-31	AN960D416	B.	WASHER (88044)	5	
-32	MS21042L4	B.	NUT (96906)	5	
-33	MS29513-227	B.	PACKING (96906)	1	
-34	39585	B.	INTERCONNECTOR ASSY, gun bay fuel tank (A0043) (05476) (Lockheed spec dwg 634254-1) (alternate to 5A1249) (1 reqd only when conversion kit 850101-105 is installed)	2	
	5A1249	B.	INTERCONNECTOR ASSY, gun bay fuel tank (03481) (Lockheed spec dwg 634254-1) (alternate to 39585) (1 reqd only when conversion kit 850101-105 is installed)	2 REF	
			Attaching Parts		
-35	AN4-6A	B.	BOLT (88044)	6	
-36	AN960D416	B.	WASHER (88044)	6	
-36A	851106-101	B.	COVER, case stowage to gun bay fuel tank interconnect (NHA 783286-101)	1	

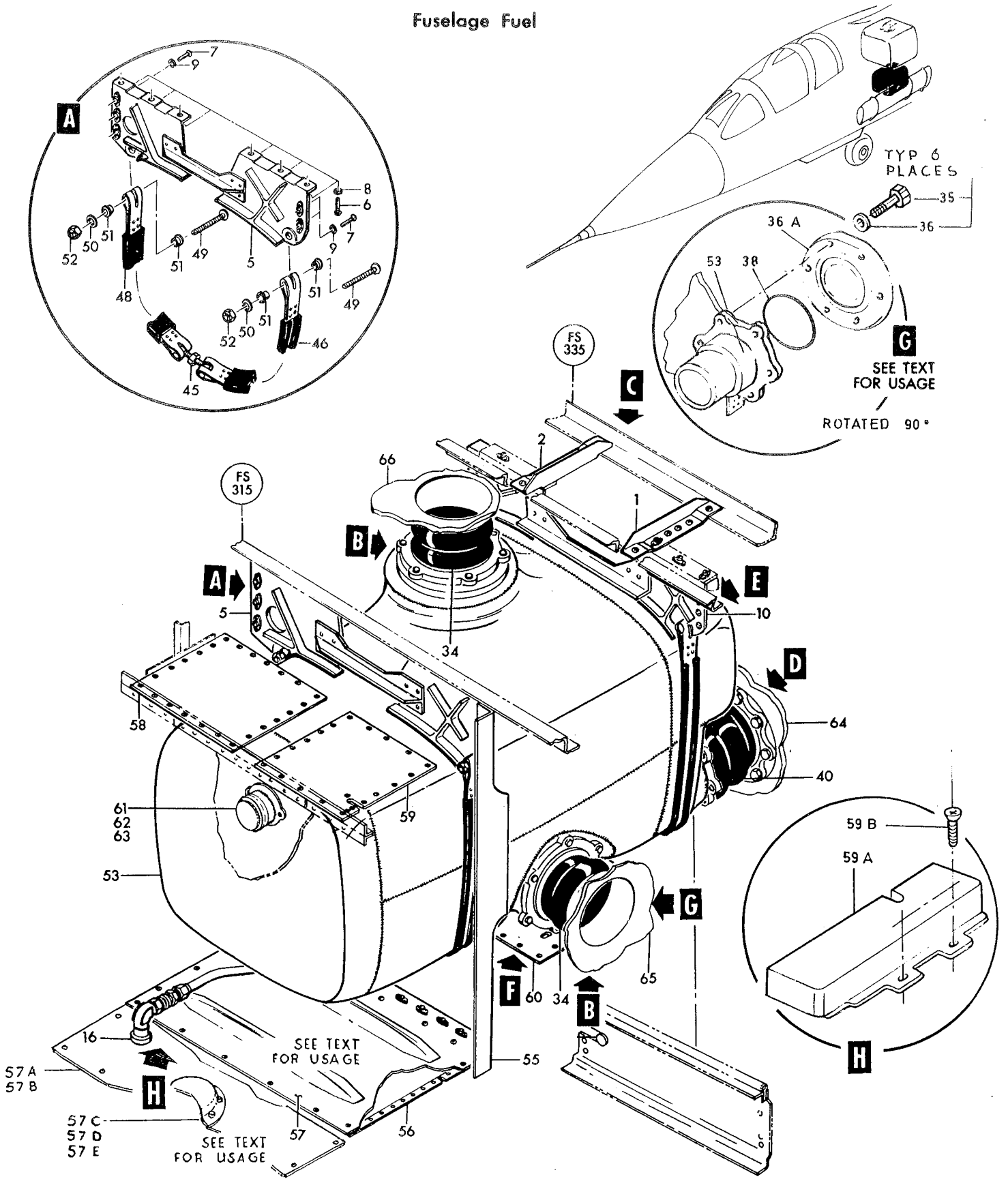

Figure 98—Case Stowage Compartment Auxiliary Fuel Tank and Attachments (Sheet 1 of 2)

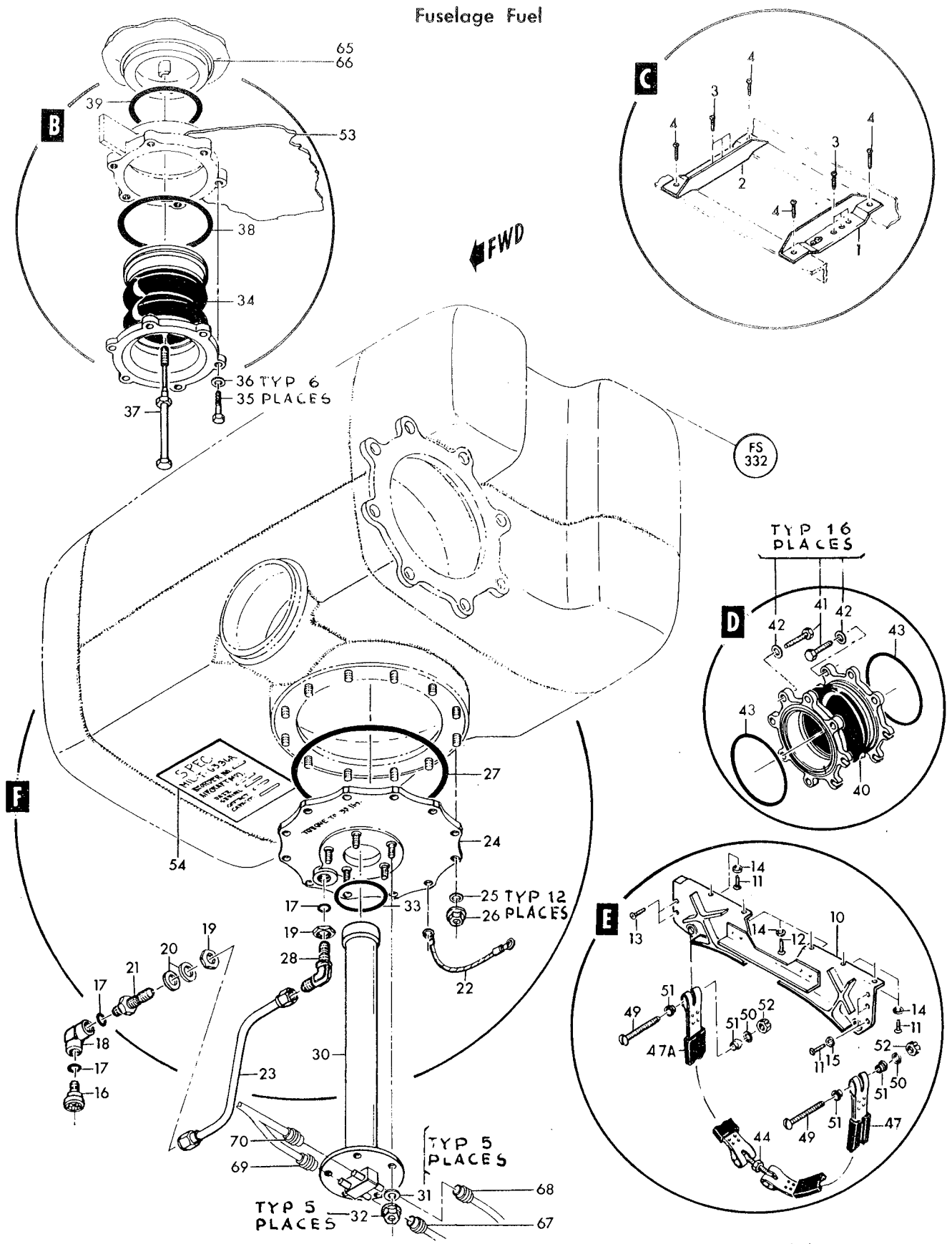

Figure 98—Case Stowage Compartment Auxiliary Fuel Tank and Attachments (Sheet 2 of 2)

Figura e particolare	NDR	1	2	3	4	5	6	7	DENOMINAZIONE	Quant.	Codice applicab.
98-37	728262-1	B.							BOLT, gun bay fuel tank interconnect (1 reqd only when conversion kit 850191-105 is installed)	2	
-38	MS29513-244	B.							PACKING (96906)	2	
-39	MS29513-237	B.							PACKING (96906) (1 reqd only when conversion kit 850191-105 is installed)	2	
-40	39586	B.							INTERCONNECTOR ASSY, aft gun bay fuel tank (A0043) (05476) (Lockheed spec dwg 634255-1) (alternate to 4A1377) *(see fig. 100)*	1	
	4A1377	B.							INTERCONNECTOR ASSY, aft gun bay fuel tank (03481) (Lockheed spec dwg 634255-1) (alternate to 39586) *(see fig. 100)*	REF	
									Attaching Parts		
-41	AN4-6A	B.							BOLT (88044)	16	
-42	AN960D416	B.							WASHER (88044)	16	
									*		
-43	MS29513-240	B.							PACKING (96906)	2	
-44	NAS27-4-24	B.							TURNBUCKLE (80205)	1	
-45	NAS27-4-26	B.							TURNBUCKLE (80205)	1	
-46	728261-1	B.							STRAP ASSY, fuel tank	1	
-47	728261-3	B.							STRAP ASSY, fuel tank	1	
-47A	728261-101	B.							STRAP ASSY, fuel tank	1	
-48	728261-103	B.							STRAP ASSY, fuel tank	1	
-49	AN25-27	B.							BOLT (88044)	4	
-50	AN960-516L	B.							WASHER (88044)	4	
-51	LS3859F5-18	B.							BUSHING, flanged (36659)	8	
-52	AN320-5	B.							NUT (88044)	4	
-53	783283-1	B.							TANK ASSY, case stowage compartment fuel	1	
-54	779081-1	B.							NAMEPLATE, fuel cell	1	
-55	783175-5	G.							STIFFENER ASSY, fuel provisions fuselage station 315 LH	1	
-56	784496-1	C.							PAN ASSY, fuel tank seal	1	
-57	784762-1	L.							PANEL ASSY, fuselage station 305 to 315 fuel conversion debris compartment	1	6701-6815
	852185-101	I.							PANEL ASSY, fuselage station 305 to 315 fuel conversion debris compartment	1	
-57A	852185-103	I.							PANEL, fuselage station 305 to 315 fuel conversion debris compartment	1	
-57B	852171-101	I.							PROTECTION, light lower navigation	1	
-57C	NAS623-3-2	I.							SCREW (80205)	6	
-57D	LS881-6	I.							WASHER, plain aluminum (36659)	12	
-57E	MS21042L3	I.							NUT (96906)	6	
									Attaching Parts		
	NAS623-3-2	C.							SCREW(80205)	57	
	AN960D10	C.							WASHER (88044)	57	
									*		
-58	785200-1	C.							COVER, case stowage electronic compartment air dump valve *(see fig. 230)*	1	
									Attaching Parts		
	NAS623-3-2								SCREW (80205)	24	
	AN960D10								WASHER (88044)	24	
									*		
-59	785200-3	C.							COVER, case stowage electronic compartment air dump valve *(see fig. 230)*	1	
									Attaching Parts		
	NAS623-3-2								SCREW (80205)	22	
	AN960D10								WASHER (88044)	22	
									*		
-59A	850428-101	C.							COVER ASSY, duct air dump electronic compartment	1	
-59B	NAS514P832-6	C.							SCREW (80206)	2	
-60	784271-1	D.							COVER, link ejection chute	1	
									Attaching Parts		
	NAS517-3-2	D.							SCREW (80205)	9	
	NAS517-3-3	D.							SCREW (80205)	5	
									*		
-61	784105-1	E.							COVER, case stowage compartment fuel vapor seal fuselage station 305 *(see fig. 147)*	1	

Figura e particolare	NDR	1 2 3 4 5 6 7 DENOMINAZIONE	Quant.	Codice applicab.
		Attaching Parts		
98	NAS221-8	E. . SCREW (80205)	2	
	MS21042L3	E. . NUT (96906)	2	
-62	777559-1	E. . GASKET, gun debris compartment duct *(see fig. 147 for reqd)*	REF	
-63	727385-29	E. CLAMP ASSY, gun purge air hose *(see fig. 147 for reqd)*	REF	
-64	36925-5	. TANK ASSY, fuselage auxiliary fuel (05476) (Lockheed spec dwg 634258-117) *(see fig. 100 for reqd)*	REF	
-65	783281-1	. TANK ASSY, gun bay fuel *(see fig. 99 for reqd)*	REF	
-66	783282-1	. TANK ASSY, ammunition compartment fuel *(see fig. 99 for reqd)*	REF	
	849652-101	F. HARNESS ASSY, case stowage to ammunition compartment fuel quantity *(see fig. 184 for reqd)*	REF	
-67	1-672-1	F. . CONNECTOR, (P95) plug (case stowage fuel quantity transmitter) (95712) *(see fig. 184)*	1	
-68	1-690-1	F. . CONNECTOR, (P94) plug (case stowage fuel quantity transmitter) (95712) *(see fig. 184)*	1	
	849651-101	F. HARNESS ASSY, gun bay to case stowage compartment fuel quantity *(see fig. 184 for reqd)*	REF	
-69	1-672-1	F. . CONNECTOR, (P95) plug (case stowage) (95712)	1	
-70	1-690-1	F. . CONNECTOR, (P94) plug (case stowage) (95712)	1	

A - All parts marked with letter A serve also to install fuel tanks in basic aircraft in lieu of bay conversion kit (NHA 783481-1) *(see fig. 30 for reqd)*
B - All parts marked with letter B serve also to install fuel tanks in basic aircraft in lieu of bay conversion kit (NHA 783286-101) *(see fig. 30 for reqd)*
C - All parts marked with letter C serve also to install fuel tanks in basic aircraft in lieu of bay conversion kit (NHA 784761-1) *(see fig. 230 for reqd)* 6701-6815
D - All parts marked with letter D serve also to install fuel tanks in basic aircraft in lieu of bay conversion kit (NHA 778180-503) *(see fig. 230 for reqd)*
E - All parts marked with letter E serve also to install fuel tanks in basic aircraft in lieu of bay conversion kit (NHA 777476-101) *(see fig. 147 for reqd)*
F - All parts marked with letter F serve also for gun to fuel tanks conversion kit 850191-105
G - All parts marked with letter G serve also to install fuel tanks in basic aircraft in lieu of bay conversion kit (NHA 760115-151)
H - Only for FB
I - Reqd per AA.1F-104-OT-759B. All parts marked with letter I serve also to install fuel tanks in basic aircraft in lieu of bay conversion kit (NHA 784761-101) *(see fig. 230 for reqd)*
L - Removed per AA.1F-104-OT-759B. All parts marked with letter L serve also to install fuel tanks in basic aircraft in lieu of bay conversion kit (NHA 784761-1) *(see fig. 230 for reqd)* 6701-6815

Figura e particolare	NDR	1 2 3 4 5 6 7 DENOMINAZIONE	Quant.	Codice applicab.
		GUN BAY FUEL TANK		
99	850191-105	B. CONVERSION KIT, gun to fuel tanks *(see fig. 260 for reqd)*	REF	
- 1	778069-1	B. . CRADLE ASSY, fuselage station 279 forward gun bay fuel tank	1	
		Attaching Parts		
- 2	NAS623-3-4	B. . SCREW (80205)	2	
- 3	NAS623-3-10	B. . SCREW (80205)	4	
- 4	NAS623-3-12	B. . SCREW (80205)	2	
- 5	AN960D10	B. . WASHER (88044)	6	
- 6	2230-3	B. . WASHER, sealing (98159)	2	
- 7	777973-1	B. . CRADLE ASSY, fuselage station 310 aft gun bay fuel tank	1	
		Attaching Parts		
- 8	NAS623-3-5	B. . SCREW (80205)	1	
- 9	NAS623-3-6	B. . SCREW (80205)	2	
- 10	NAS623-3-7	B. . SCREW (80205)	2	
- 11	NAS623-4-5	B. . SCREW (80205)	1	
- 12	NAS623-4-6	B. . SCREW (80205)	2	
- 13	NAS623-4-7	B. . SCREW (80205)	1	
- 14	LS6061-416L	B. . WASHER, plain (36659)	4	
- 15	LS881-2	B. . WASHER, plain aluminum (36659)	5	
- 16	NAS27-5-24	B. . TURNBUCKLE (80205)	2	
- 17	AN25-22	B. . BOLT (88044)	2	
- 18	AN25-30	B. . BOLT (88044)	2	
- 19	AN960D516	B. . WASHER (88044)	4	
- 20	AN320-5	B. . NUT (88044)	4	
- 21	786703-1	B. . STRAP ASSY, forward gun bay fuel tank	1	
- 22	786703-3	B. . STRAP ASSY, forward gun bay fuel tank	1	
- 23	786702-1	B. . STRAP ASSY, aft fuel tank gun bay	1	
- 24	786702-3	B. . STRAP ASSY, aft fuel tank gun bay	1	
- 25	783281-1	B. . TANK ASSY, gun bay fuel *(see fig. 98)*	1	
- 26	728110-1	B. . . SPRING ASSY, fuel quantity transmitter mounting	4	
		Attaching Parts		
- 27	AN515-8R8	B. . . SCREW (88044)	2	
- 28	AN960D8	B. . . WASHER (88044)	2	
- 29	MS21042L08	B. . . NUT (96906)	2	
- 30	779081-1	B. . . NAMEPLATE, fuel cell	1	
	783281-111	B. . . SHELL ASSY, gun bay outboard	1	
- 31	779860-1	B. . . . TUBE ASSY, gun bay fuel tank vent	1	
- 32	AN742D12	B. . . . CLAMP (88044)	3	
		Attaching Parts		
- 33	AN520-10R10	B. . . . SCREW (88044)	1	
- 34	AN960D10	B. . . . WASHER (88044)	1	
- 35	MS21042L3	B. . . . NUT (96906)	1	
- 36	AN837-12D	B. . . . ELBOW (88044)	1	
	783281-123	B. . . PLUMBING INSTL, gun bay fuel	1	
- 37	AN924-12D	B. . . . NUT (88044)	1	
- 38	MS29512-12	B. . . . PACKING (96906)	1	
- 39	774152-119	B. . . . TUBE ASSY, fuel tank vent	1	
- 40	AN815-4D	B. . . . UNION (88044)	1	
- 41	MS29512-4	B. . . . PACKING (96906)	1	
- 42	778841-1	B. . COVER, aft auxiliary fuel tank access hole	1	
		Attaching Parts		
- 43	AN4H5A	B. . BOLT (88044)	10	
- 44	AN960D416	B. . WASHER (88044)	10	
- 45	784135-1	B. . COVER ASSY, gun bay fuel tank access hole	1	
	784135-3	B. . . COVER, gun bay fuel tank access hole	1	

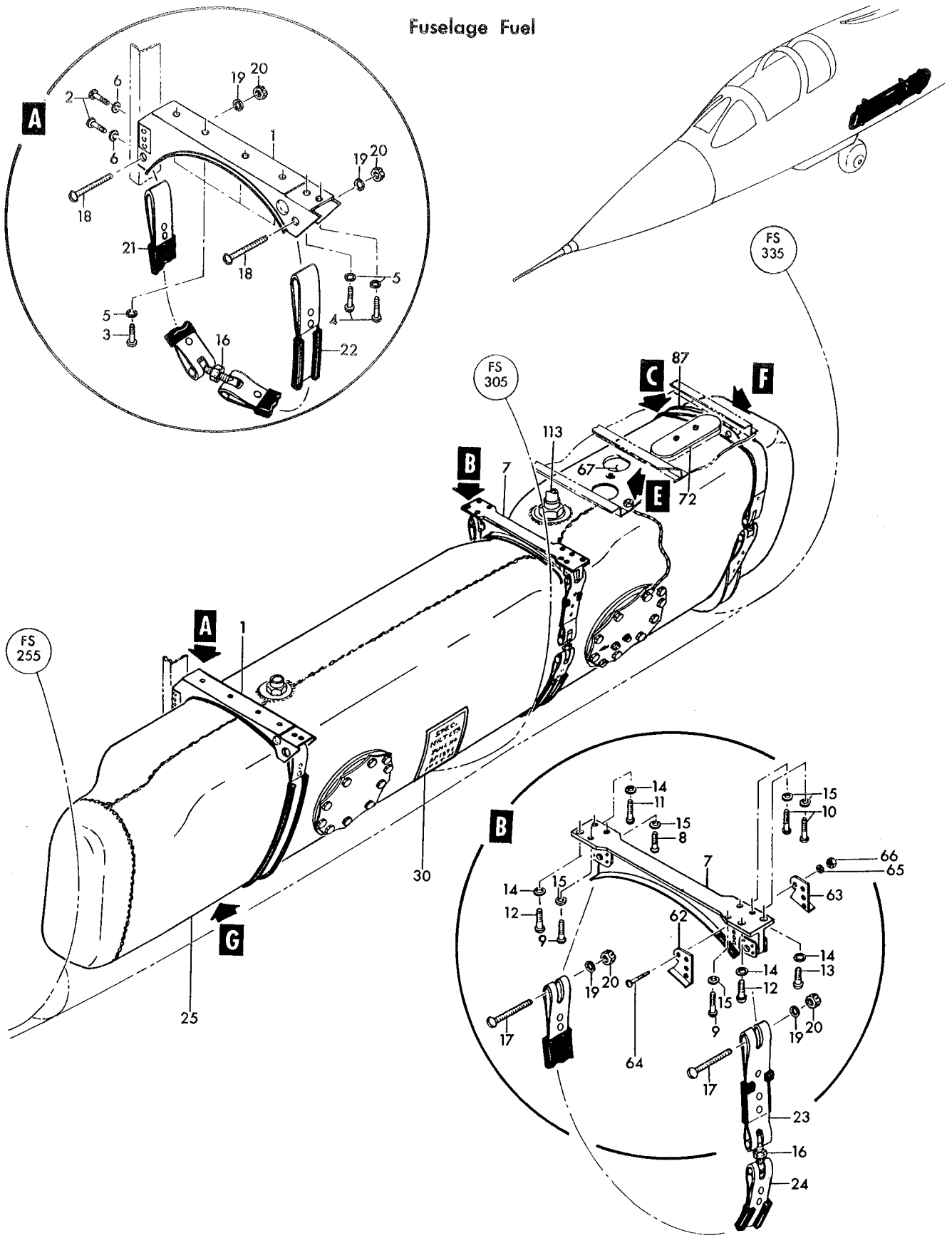

Figure 99— Gun Bay Fuel Tank (Sheet 1 of 3)

Fuselage Fuel

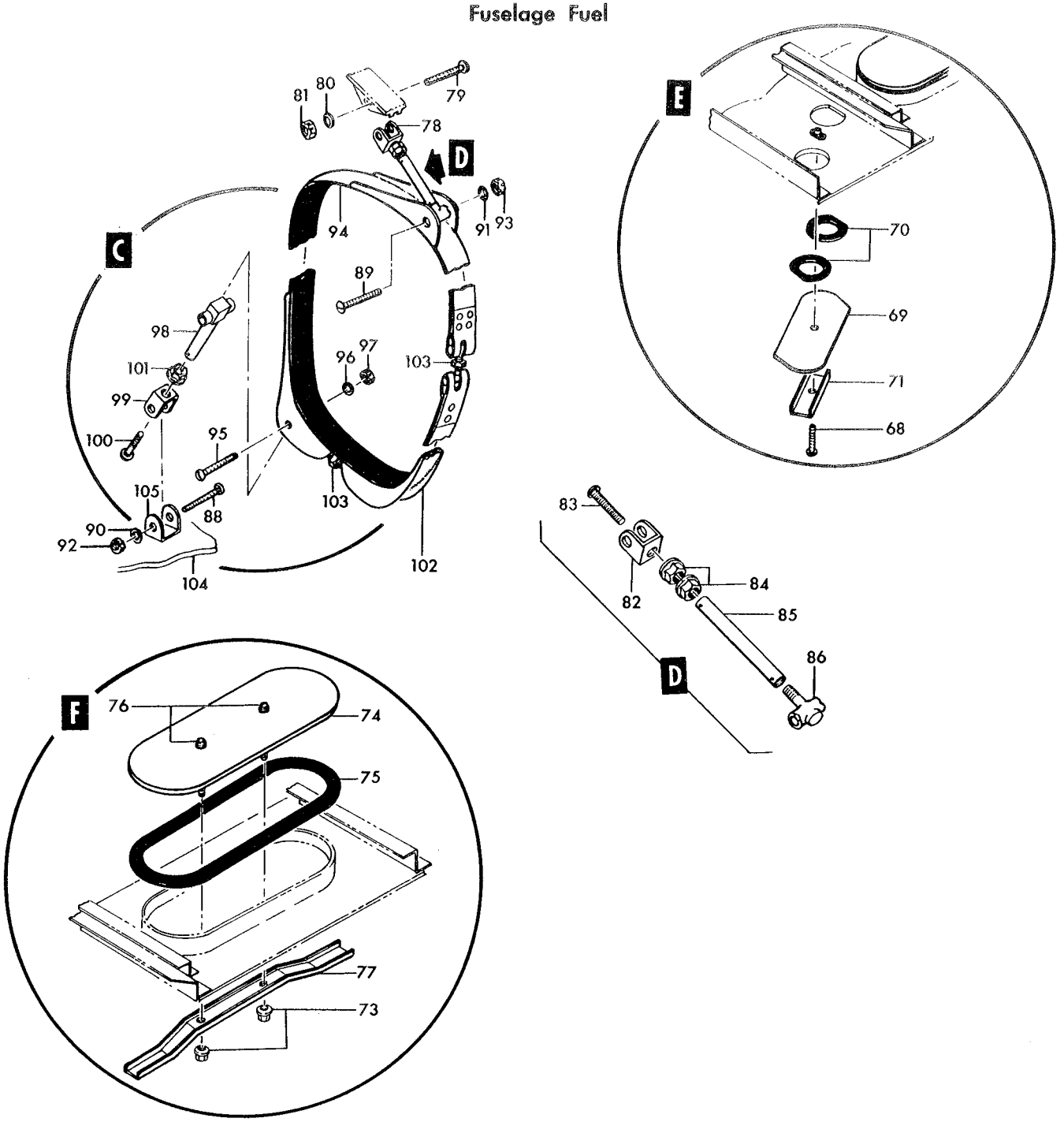

Figure 99—Gun Bay Fuel Tank (Sheet 2 of 3)

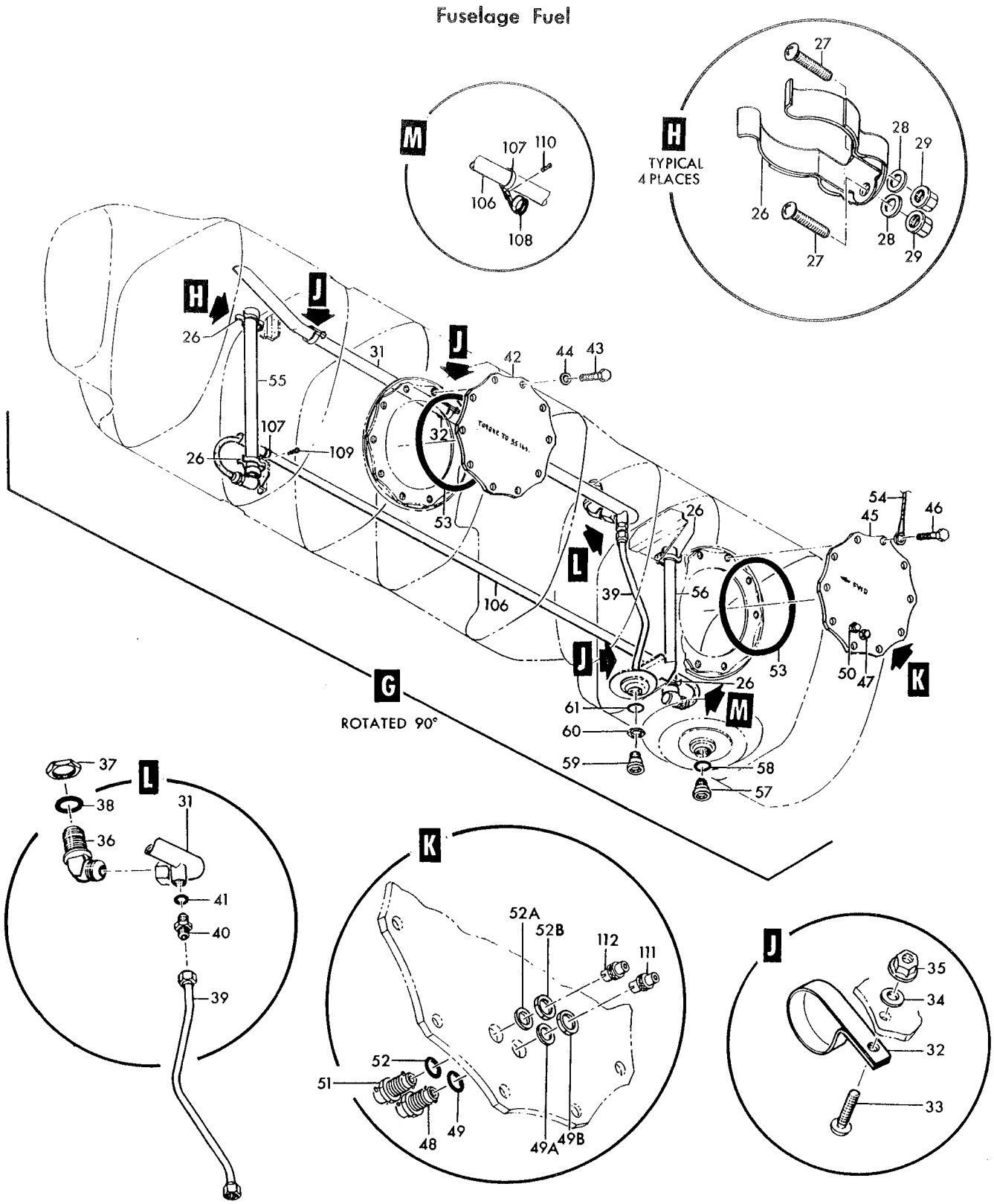

Figure 99—Gun Bay Fuel Tank (Sheet 3 of 3)

Figura e particolare	NDR	1	2	3	4	5	6	7	DENOMINAZIONE	Quant.	Codice applicab.
									Attaching Parts		
99- 46	AN4H5A	B.	.	.					BOLT (88044)	10	
	AN960D416	B.	.	.					WASHER (88044)	9	
									☼		
	783118-1	B.	.	.					ADAPTER ASSY, aft auxiliary fuel tank	1	
- 47	783118-3	B.	.	.	.				ADAPTER, aft auxiliary fuel tank (altered from Dage Electric Co. P-N 1-891-1)	1	
- 48	A101-952-2	B.	.	.	.				PLUG (95712)	1	
- 49	MS29512-4	B.	.	.	.				PACKING (96906)	1	
- 49A	A100-077-13	B.	.	.	.				RING, backup (95712)	1	
- 49B	A101-497-2	B.	.	.	.				NUT (95712)	1	
	783119-1	B.	.	.					ADAPTER ASSY, aft auxiliary fuel tank	1	
- 50	783119-3	B.	.	.	.				ADAPTER, aft auxiliary fuel tank (altered from Dage Electric Co. P-N 1-892-1)	1	
- 51	A101-952-2	B.	.	.	.				PLUG (95712)	1	
- 52	MS29512-4	B.	.	.	.				PACKING (96906)	1	
- 52A	A100-077-13	B.	.	.	.				RING, backup (95712)	1	
- 52B	A101-497-2	B.	.	.	.				NUT (95712)	1	
- 53	MS29513-261	B.	.						PACKING (96906)	2	
- 54	MS25083-1BC9	B.	.						JUMPER (96906)	1	
- 55	FG220A142	B.	.						TRANSMITTER, (TR7) liquid quantity fuel gun bay tank forward (A0019) (94580) (Lockheed spec dwg 624386-5) (see T.O. 5L13-3-13-2)	1	
- 56	FG220A143	B.	.						TRASMITTER, (TR8) liquid quantity fuel gun bay tank aft (A0019) (94580) (Lockheed spec dwg 624386-7) (see T.O. 5L13-3-13-2)	1	
- 57	740B8X	B.	.						VALVE, drain poppet (91511) (Lockheed spec dwg 634178-1)	1	
- 58	MS29512-6	B.	.						PACKING (96906)	1	
- 59	740B5	B.	.						VALVE, poppet drain (91511) (Lockheed spec dwg 633971-5) (see T.O. 6J15-4-56-3)	1	
- 60	AN924-4D	B.	.						NUT (88044)	1	
- 61	MS29512-4	B.	.						PACKING (96906)	1	
- 62	787167-1	B.	.						FLANGE ASSY, removable fuselage station 310 aft gun bay fuel tenk	1	
- 63	787167-4	B.	.						FLANGE, removable fuselage station 310 aft gun bay fuel tank	1	
									Attaching Parts		
- 64	NAS623-3-4	B.	.						SCREW (80205)	4	
- 65	AN960D10	B.	.						WASHER (88044)	4	
- 66	MS21042L3	B.	.						NUT (96906)	4	
									☼		
- 67	785982-1	B.	.						COVER ASSY, ammunition compartment floor hole	1	
									Attaching Parts		
- 68	NAS623-3-7	B.	.						SCREW (80205)	1	
									☼		
- 69	785982-3	B.	.	.					COVER, ammunition compartment floor hole	1	
- 70	785980-1	B.	.	.					GASKET, ammunition compartment hole cover	2	
- 71	785978-1	B.	.						CHANNEL, ammunition compartment floor hole cover	1	
- 72	785983-1	B.	.						COVER ASSY, ammunition chute hole	1	
									Attaching Parts		
- 73	MS21042L3	B.	.						NUT (96906)	2	
									☼		
- 74	785983-3	B.	.	.					COVER, ammunition chute hole	1	
- 75	785981-1	B.	.	.					GASKET, ammunition chute hole cover	1	
- 76	R960E	B.	.	.					STUD (29666)	2	
	LCR6	B.	.	.					COLLAR, lockbolt (29666)	2	
- 77	785979-1	B.	.						CHANNEL, ammunition chute hole cover	1	
- 78	783284-5	B.	.						STRUT ASSY, fuel gun bay tank	1	
									Attaching Parts		
- 79	AN24-25	B.	.						BOLT (88044)	1	
- 80	AN960D416	B.	.						WASHER (88044)	1	
- 81	AN320-4	B.	.						NUT (88044)	1	
									☼		
- 82	782803-1	B.	.	.					CLEVIS auxiliary fuel tank	1	

Figura e particolare	NDR	1 2 3 4 5 6 7 DENOMINAZIONE	Quant.	Codice applicab.
99-83	AN502-416-30	B. . . SCREW (88044)	1	
-84	MS21042L4	B. . . NUT (96906)	2	
-85	787378-1	B. . . STRUT, tank support	1	
-86	787377-1	B. . . BOLT, tank support adjustment	1	
-87	787371-101	B. . CRADLE ASSY, gun bay fuel tank	1	
		Attaching Parts		
-88	AN24-24	B. . BOLT (88044)	1	
-89	AN25-28	B. . BOLT (88044)	1	
-90	AN960D416	B. . WASHER (88044)	1	
-91	AN960D516	B. . WASHER (88044)	1	
-92	AN320-4	B. . NUT (88044)	1	
-93	AN320-5	B. . NUT (88044)	1	
-94	787371-103	B. . . CRADLE ASSY, inboard gun bay fuel tank	1	
-95	AN24-30	B. . . BOLT (88044)	1	
-96	AN960D416	B. . . WASHER (88044)	1	
-97	AN320-4	B. . . NUT (88044)	1	
	787371-15	B. . . CLEVIS ASSY, inboard gun bay fuel tank	1	
-98	782799-1	B. . . . FITTING, aft auxiliary fuel tank tee	1	
-99	782803-1	B. . . . CLEVIS, auxiliary fuel tank	1	
-100	AN502-416-30	B. . . . SCREW (88044)	1	
-101	MS21042L4	B. . . . NUT (96906)	1	
-102	787372-1	B. . CRADLE ASSY, outboard gun bay fuel tank	1	
-103	NAS27-4-26	B. . TURNBUCKLE (80205)	2	
-104	778331-3	B. . COVER, armament compartment gas purge removable *(see fig. 148 for reqd)*	REF	
-105	787376-1	B. . FITTING, lower tank support *(see fig. 148 for reqd)*	REF	
-106	784581-93	B. . CONDUIT, gun bay tank	1	
-107	AN742D10	B. . CLAMP (88044)	2	
-108	LS7357DT3	B. . CLAMP, fuel resistant cushioned loop (36659)	1	
		Attaching Parts		
-109	NAS1096-3-12	B. . SCREW (80205)	1	
-110	NAS1096-3-12	B. . SCREW (80205)	1	
	AN960D10	B. . WASHER (88044)	2	
	AN935-10L	B. . WASHER (88044)	2	
	AN936A10	B. . WASHER (88044)	2	
	MS21042L3	B. . NUT (96906)	2	
	AN345-10	B. . NUT (88044)	2	
	849651-101	A. HARNESS ASSY, gun bay to case stowage compartment fuel quantity *(see fig. 184 for reqd)*	REF	
-111	1-672-1	A. . CONNECTOR, (P95) plug (95712)	1	
-112	1-690-1	A. . CONNECTOR, (P94) plug (95712)	1	
-113	785201-3	B. TUBE ASSY, fuel vent *(see fig. 97 for reqd)*	REF	

A - All parts marked with letter A serve also for gun to fuel tanks conversion kit 850191-105
B - Only for FB

Figura e particolare	NDR	1 2 3 4 5 6 7 DENOMINAZIONE	Quant.	Codice applicab.
		AUXILIARY FUEL TANK PIPING AND EQUIPMENT		
100	784380-1	A. TANK INSTL, fuselage auxiliary fuel *(see fig. 96 for reqd)*	REF	
	784380-105	B. TANK INSTL, fuselage auxiliary fuel *(see fig. 96 for reqd)*	REF	
- 1	36925-5	. . TANK ASSY, fuselage auxiliary fuel (A0043) (05476) (Lockheed spec dwg 634258-117) *(see fig. 98, 101 and 102)*	1	
		Attaching Parts		
- 2	AN960-416L	. . WASHER (88044)	24	
- 2A	AN960D416	A. . WASHER (88044)	8	
- 3	MS21042L4	. . NUT (96906)	16	
- 4	NAS1104-3	A. . BOLT (80205)	8	
- 5	NAS1104-4	. . BOLT (80205)	8	
- 6	AN960-10L	. . WASHER (88044)	12	
- 7	MS21042L3	. . NUT (96906)	12	
- 8	SRP119	. . GASKET, fuel tank manhole cover O Ring (17991) (Lockheed spec dwg 750418-3) (alternate to SRCBZ127C and 026861)	1	
	SRC-BZ1270	. . GASKET, fuel tank manhole cover O Ring (95272) (Lockheed spec dwg 750418-3) (alternate to SRP119 and 026861)	REF	
	026861	. . GASKET, fuel tank manhole cover O Ring (83259) (Lockheed spec dwg 750418-3) (alternate to SRP119 and SRCBZ127C)	REF	
- 9	787367-1	A. . COVER ASSY, complete auxiliary fuel tank manhole	1	
	787367-3	B. . COVER ASSY, complete auxiliary fuel tank manhole	1	
		Attaching Parts		
-10	AN960-416L	. . WASHER (88044)	20	
-11	MS21042L4	. . NUT (96906)	20	
-12	NAS623-3-6	B. . SCREW (80205)	5	
	NAS623-3-7	A. . SCREW (80205)	5	
-13	AN960-10L	. . WASHER (88044)	5	
-14	NAS623-4-8	. . SCREW (80205)	4	
-15	787368-1	. . . COVER ASSY, auxiliary tank manhole	1	
	787368-3	. . . . COVER, auxiliary tank manhole	1	
-21	787220-1	. . . TEE, auxiliary tank vent line *(see fig. 109)*	1	
-22	MS29513-223	. . . PACKING (96906)	2	
-23	MS29513-236	. . . PACKING (96906)	1	
-24	11-954-81	. . . VALVE, vent fuel tank float (A0303) (82267) (Lockheed spec dwg 633953-7) (see T.O. 6J15-5-30-3)	1	
-25	751059-1	. . . ELBOW ASSY, auxiliary tank *(see fig. 109)*	1	
-26	772078-1	. . . CONNECTOR, auxiliary tank fuel transfer	1	
-27	6-657-1	. . . VALVE, (L17) fuel level control fuel tank dual float (82267) (Lockheed spec dwg 634200-1) (see T.O. 6J15-3-89-3)	1	
-28	751136-1	. . . GASKET ASSY, fuel shutoff valve	1	
-29	MS29513-213	. . . PACKING (96906)	2	
-30	AN960-416L	. . . WASHER (88044)	20	
-31	MS21042L4	. . . NUT (96906)	20	
-32	MS29513-325	A. . . PACKING (96906)	1	
-33	3630-24D1	A. . . CAP (79326)	1	
-34	3655-24D	A. . . COUPLING (79326)	1	
-35	MS29513-228	. . PACKING (96906)	1	
-36	601392-12D0400	. . HOSE ASSY (auxiliary tank fuel transfer) (00624)	1	
-37	AN919-25D	. . REDUCER (88044)	1	
-38	MS29512-20	. . PACKING (96906)	2	
-39	307100-20A	. . VALVE, fuel check (A0809) (96124) (Lockheed spec dwg 634128-3) (alternate to F60A0224) (see T.O. 6J15-2-135-3)	1	
	F60A0224	. . VALVE, fuel check (92003) (Lockheed spec dwg 634128-3) (alternate to 307100-20A) (see T.O. 6J15-2-153-3)	REF	
	784380-3	. . PUMP ASSY, fuselage auxiliary fuel tank	1	
-40	AN924-4D	. . . NUT (88044)	2	
-41	MS29512-4	. . . PACKING (96906)	2	
-42	769779-3	. . . ELBOW, auxiliary tank pump drain	1	

Fuselage Fuel

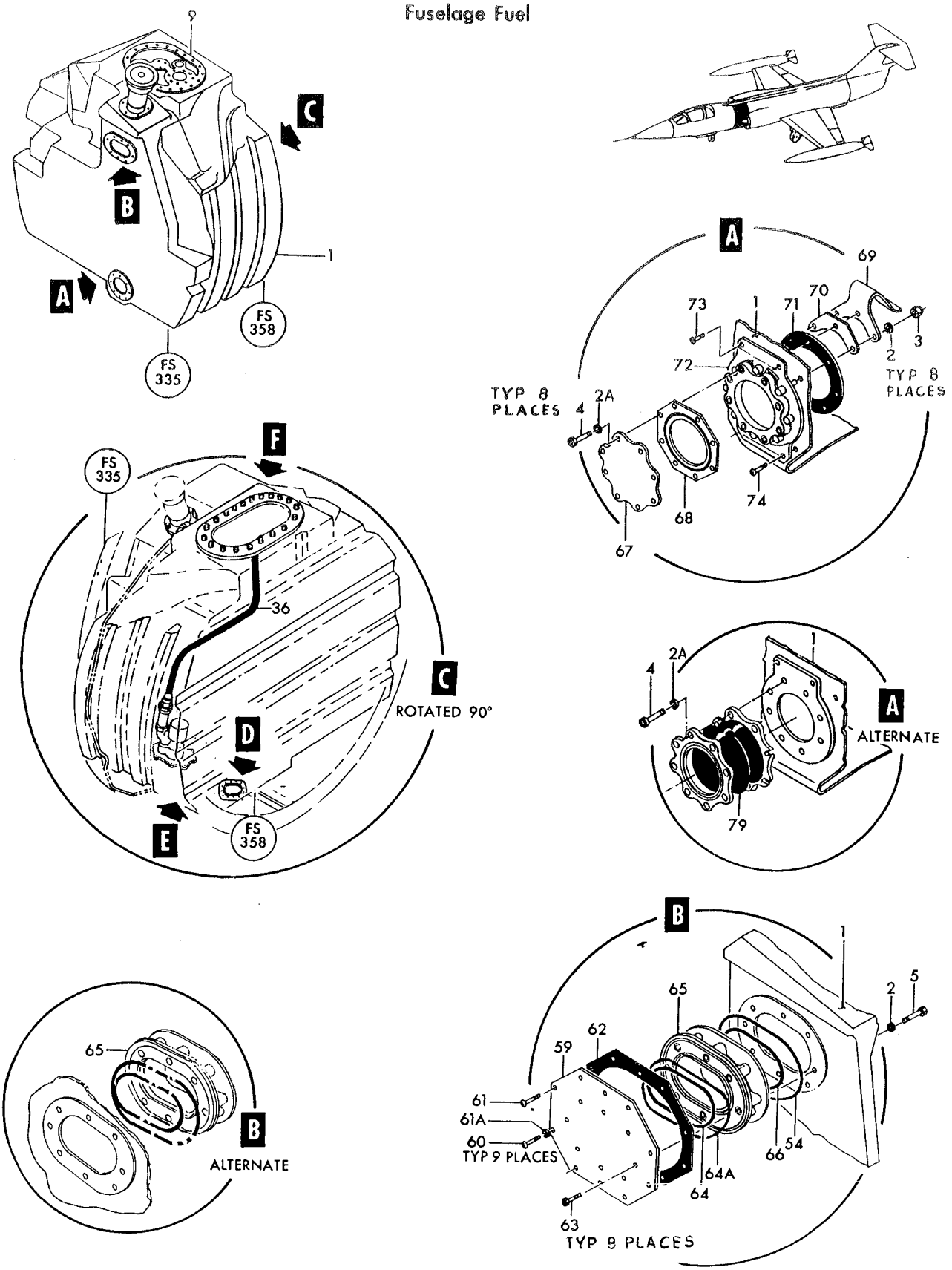

Figure 100—Auxiliary Fuel Tank Piping and Equipment (Sheet 1 of 2)

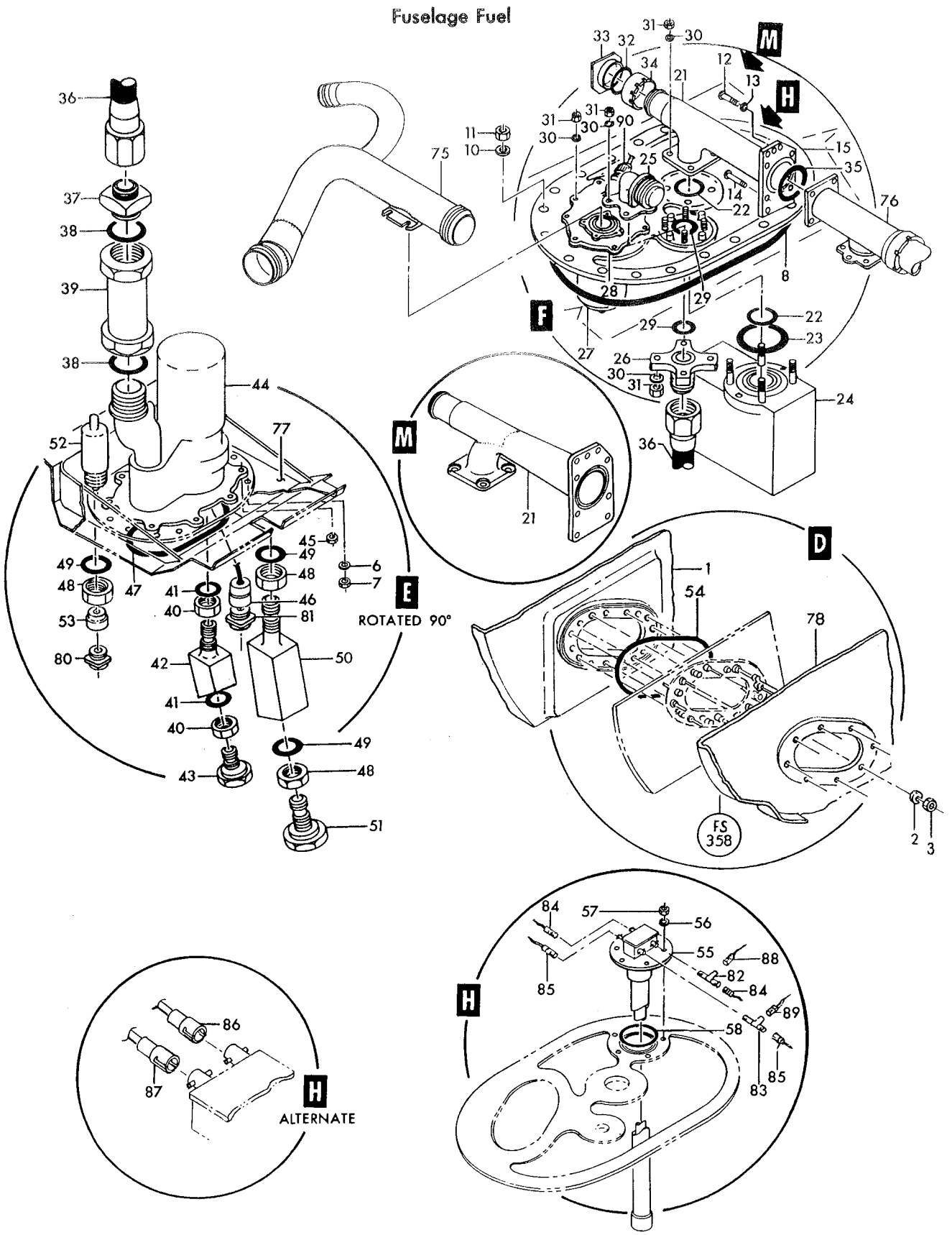

Figure 100—Auxiliary Fuel Tank Piping and Equipment (Sheet 2 of 2)

Figura e particolare	NDR	1	2	3	4	5	6	7	DENOMINAZIONE	Quant.	Codice applicab.
100-43	740B5								VALVE, poppet drain (91511) (Lockheed spec dwg 633971-5) (see T.O. 6J15-4-56-3)	1	
	784879-1								HARNESS ASSY, auxiliary fuel tank transfer pump	1	
-44	60-125B								PUMP ASSY, (B24) fuel transfer centrifugal (A0303) (81982) (Lockheed spec dwg 633961-3) (alternate to TB125300-4) (see T.O. 6J10-3-89-3)	1	
	TB125300-4								PUMP ASSY, (B24) fuel transfer centrifugal (59875) (Lockheed spec dwg 633961-3) (alternate to 60-125B) (see LR6-14404-380-4)	REF	
									Attaching Parts		
	AN960-416L								WASHER (88044)	8	
-45	MS21042L4								NUT (96906)	8	
-46	MS25183-14S5P								CONNECTOR, (P133) plug (pump P-59 disc) (96906)	1	
-47	MS29513-252								PACKING (96906)	1	
-48	AN924-6D								NUT (88044)	3	
-49	MS29512-6								PACKING (96906)	3	
-50	769778-1								ELBOW, auxiliary tank sump drain	1	
-51	740B1								VALVE, poppet drain (91511) (Lockheed spec dwg 633971-1) (see T.O. 6J15-4-56-3)	1	
	784593-1	A.							HARNESS ASSY, auxiliary fuel tank pump	1	
	852036-101	B.							HARNESS ASSY, auxiliary fuel tank pump	1	
-52	365								SWITCH, (S7) liquid level float actuated (A1582) (alternate to F8300-26)	1	
	F8300-26								SWITCH, (S7) liquid level float actuated (50625) (Lockheed spec dwg 633963-3) (alternate to 365A)	REF	
-53	CA3106KE10SL4S								CONNECTOR, (P109) plug (float switch P-60 disc) (71468)	1	
	MS3057-4A								ADAPTER (96906)	1	
	AN3420-4								BUSHING (88044)	1	
-54	MS29513-259								PACKING (96906)	2	
-55	FG200A47								TRANSMITTER, (TR12) auxiliary flange mounted fuel liquid quantity (A0019) (94580) (Lockheed spec dwg 624384-3) (see T.O. 5L14-3-21-23)	1	
									Attaching Parts		
-56	AN960-416L								WASHER (88044)	5	
-57	MS21042L4								NUT (96906)	5	
-58	MS29513-227								PACKING (96906)	1	
	LS898-5								PATCH, fabric (36659)	8	
	LS898-6								PATCH, fabric (36659)	6	
	783430-1	A.							COVER INSTL, ammunition compartment and auxiliary fuel tank interconnect	1	
-59	783496-1	A.							COVER, ammunition compartment and auxiliary fuel tank interconnect	1	
									Attaching Parts		
-60	NAS623-3-6	A.							SCREW (80205)	9	
-61	NAS623-3-7	A.							SCREW (80205)	1	
-61A	AN960-10L	A.							WASHER (88044)	1	
-62	783497-1	A.							GASKET, ammunition compartment and auxiliary fuel tank interconnect	1	
-63	NAS1104-2	A.							BOLT (80205)	8	
-64	MS29513-246	A.							PACKING (96906)	1	
-64A	MS29513-259	A.							PACKING (96906)	1	
-65	778474-1								SPACER ASSY, ammunition compartment and auxiliary fuel tank interconnect *(see fig. 97)*	1	
									Attaching Parts		
	NAS1104-4								BOLT (80205)	8	
	AN960-416L								WASHER (88044)	8	
-66	MS29513-246								PACKING (96906)	1	
-67	783431-1	A.							COVER, fuel tank interconnect	1	
-68	751326-1	A.							GASKET ASSY, auxiliary fuel tank interconnect	1	
-69	779116-1								STOP, auxiliary fuel tank interconnect flapper	1	
-70	779154-1								SHIM, auxiliary fuel tank interconnect	1	

Figura e particolare	NDR	1 2 3 4 5 6 7 DENOMINAZIONE	Quant.	Codice applicab.
100-71	MS29513-255	. . PACKING (96906)	1	
	784381-1	. . LANCING INSTL, auxiliary fuel tank *(see fig. 101)*	1	
-72	783100-1	. FLANGE ASSY, case stowage to auxiliary fuel tank interconnect support *(see fig. 30 for reqd)*	REF	
		Attaching Parts		
-73	NAS623-4-3	. SCREW (80205)	2	
-74	NAS623-4-4	. SCREW (80205)	2	
	AN960-416L	. WASHER (88044)	4	
	MS21042L4	. NUT (96906)	4	
-75	778345-1	. MANIFOLD ASSY, air refueling and fuel transfer *(see fig. 109 for reqd)*	REF	
-76	775479-1	. TEE ASSY, vent line *(see fig. 109 for reqd)*	REF	
-77	851205-105	. FLOOR, auxiliary fuel pump *(see fig. 39 for reqd)*	REF	
-78	36943	. TANK ASSY, forward main fuel (A0043) (05476) (Lockheed spec dwg 634259-105) *(see fig. 102 for reqd)*	REF	
-79	39586	. INTERCONNECTOR ASSY, aft gun bay fuel tank (A0043) (05476) (Lockheed spec dwg 634255-1) (alternate to 4A1377) *(see fig. 98 for reqd)*	REF	
	4A1377	. INTERCONNECTOR ASSY, aft gun bay fuel tank (03481) (Lockheed spec dwg 634255-1) (alternate to 39586) *(see fig. 98 for reqd)*	REF	
	849593-101	. HARNESS ASSY, fuel cell area splice to auxiliary tank *(see fig. 189 for reqd)*	REF	
-80	CA3100ER10SL4P	. . CONNECTOR, (J69) receptacle (float P-60 disc) (71468)	1	
-81	MS3103-14S5S	. . CONNECTOR, (J68) receptacle (pump P-59 disc) (96906)	1	
	849585-101	. HARNESS ASSY, aft quantity transmitter probe to fuel cell splice *(see fig. 193 for reqd)*	REF	
-82	5192-1	. . ADAPTER, (P159) tee (95712)	1	
-83	5193-1	. . ADAPTER, (P158) tee (95712)	1	
-84	1-672-1	. . CONNECTOR, (P95) plug (95712)	2	
-85	1-690-1	. . CONNECTOR, (P94) plug (95712)	2	
	849648-101	. HARNESS ASSY, ammunition compartment fuel quantity *(see fig. 193 for reqd)*	REF	
-86	1-672-1	. . CONNECTOR, (P95) plug (95712)	1	
-87	1-690-1	. . CONNECTOR, (P94) plug (95712)	1	
	849667-101	. HARNESS ASSY, P-32 disconnect to 310 bhd *(see fig. 178 for reqd)*	REF	6701-6740
	849872-101	. HARNESS ASSY, P-32 disconnect to 310 bhd *(see fig. 178 for reqd)*	REF	6741-6815
	852293-101	. HARNESS ASSY, P-32 disconnect to 310 bhd *(see fig. 178 for reqd)*	REF	6816-
-88	1-672-1	. . CONNECTOR, (P95) plug (95712)	1	
-89	1-690-1	. . CONNECTOR, (P94) plug (95712)	1	
	849594-101	. HARNESS ASSY, fuel cell splice to auxiliary tank fuel shutoff valve *(see fig. 193 for reqd)*	REF	
-90	MS25183-10SL3S	. . CONNECTOR, (P5) plug (96906) (fuel level shutoff aux tank)	1	

A - Only for FB
B - Only for AWX

Figura e particolare	NDR	1 2 3 4 5 6 7 DENOMINAZIONE	Quant.	Codice applicab.
		AUXILIARY FUEL TANK ATTACHMENTS		
101	784381-1	. LACING INSTL, auxiliary fuel tank *(see fig. 100 for reqd)*	REF	
	784381-3	. . LACING INSTL, forward end	1	
-1	784381-11	. . . CORD, nylon	2	
-4	784381-13	. . . CORD, nylon	2	
-7	784381-19	. . . CORD, nylon	1	
	784381-5	. . LACING INSTL, aft end	1	
-8	784381-11	. . . CORD, nylon	2	
-10	784381-13	. . . CORD, nylon	2	
-12	784381-15	. . . CORD, nylon	2	
	784381-7	. . LACING INSTL, LH side	1	
-14	784381-17	. . . CORD, nylon	3	
-16	784381-19	. . . CORD, nylon	1	
	784381-9	. . LACING INSTL, RH side	1	
-18	784381-17	. . . CORD, nylon	3	
-20	784381-19	. . . CORD, nylon	1	
	760163-149	. BULKHEAD ASSY, fuselage station 335 *(see fig. 30 for reqd)*	REF	
	785347-1	. . TANK ATTACHMENT INSTL, auxiliary fuel lacing	1	
-22	764206	. . . RING, fuel cell hanger delta	11	
	764207	. . . STRAP, fuel cell hanger	10	
	764207	. . . STRAP, fuel cell hanger	1	6701-6740
	764509	. . . STRAP, fuel cell hanger	1	6741-
	760163-151	. BULKHEAD ASSY, fuselage station 335 *(see fig. 30 for reqd)*	REF	
	785347-2	. . TANK ATTACHMENT INSTL, auxiliary fuel lacing	1	
-23	764206	. . . RING, fuel cell hanger delta	15	
	764207	. . . STRAP, fuel cell hanger	15	
-24	GF61-2250CN	. . . GROMMET, dzus (72794)	1	
	785347-15	. TANK ATTACHMENT INSTL, auxiliary fuel lacing LH *(see fig. 30 for reqd)*	REF	
-25	764206	. . RING, fuel cell hanger delta	2	
	764207	. . STRAP, fuel cell hanger	2	
	785347-16	. TANK ATTACHMENT INSTL, auxiliary fuel lacing RH *(see fig. 30 for reqd)*	REF	
-26	764206	. . RING, fuel cell hanger delta	2	
	764207	. . STRAP, fuel cell hanger	2	
	760115-135	A. FORMER ASSY, fuselage station 315 to 352 *(see fig. 30 for reqd)*	REF	
	760115-153	. FORMER ASSY, fuselage station 315 to 352 *(see fig. 30 for reqd)*	REF	
	785347-5	. . TANK ATTACHMENT INSTL, auxiliary fuel lacing	1	
-27	764206	. . . RING, fuel cell hanger delta	5	
	764207	. . . STRAP, fuel cell hanger	5	
	760115-154	. FORMER ASSY, fuselage station 315 to 352 *(see fig. 30 for reqd)*	REF	
	785347-6	. . TANK ATTACHMENT INSTL. auxiliary fuel lacing	1	
-28	764206	. . . RING, fuel cell hanger delta	5	
	764207	. . . STRAP, fuel cell hanger	5	
	760115-137	. FORMER ASSY, fuselage station 315 to 352 *(see fig. 30 for reqd)*	REF	
	785347-7	. . TANK ATTACHMENT INSTL, auxiliary fuel lacing	1	
-29	764206	. . . RING, fuel cell hanger delta	3	
	764207	. . . STRAP, fuel cell hanger	3	
-30	GF5-175CN	. . . GROMMET, dzus (72794)	3	
	760115-125	. FORMER ASSY, fuselage station 315 to 352 *(see fig. 30 for reqd)*	REF	
	785347-8	. . TANK ATTACHMENT INSTL, auxiliary fuel lacing	1	
-31	764206	. . . RING, fuel cell hanger delta	2	
	764207	. . . STRAP, fuel cell hanger	2	
-32	GF5-175CN	. . . GROMMET, dzus (72794)	3	
	760115-139	. FORMER ASSY, fuselage station 315 to 352 *(see fig. 30 for reqd)*	REF	
	785347-9	. . TANK ATTACHMENT INSTL, auxiliary fuel lacing	1	
-33	764206	. . . RING, fuel cell hanger delta	2	
	764207	. . . STRAP, fuel cell hanger	2	
-34	GF5-175CN	. . . GROMMET, dzus (72794)	2	
	760115-117	. FORMER ASSY, fuselage station 315 to 352 *(see fig. 30 for reqd)*	REF	
	785347-10	. . TANK ATTACHMENT INSTL, auxiliary fuel lacing	1	
-35	764206	. . . RING, fuel cell hanger delta	3	

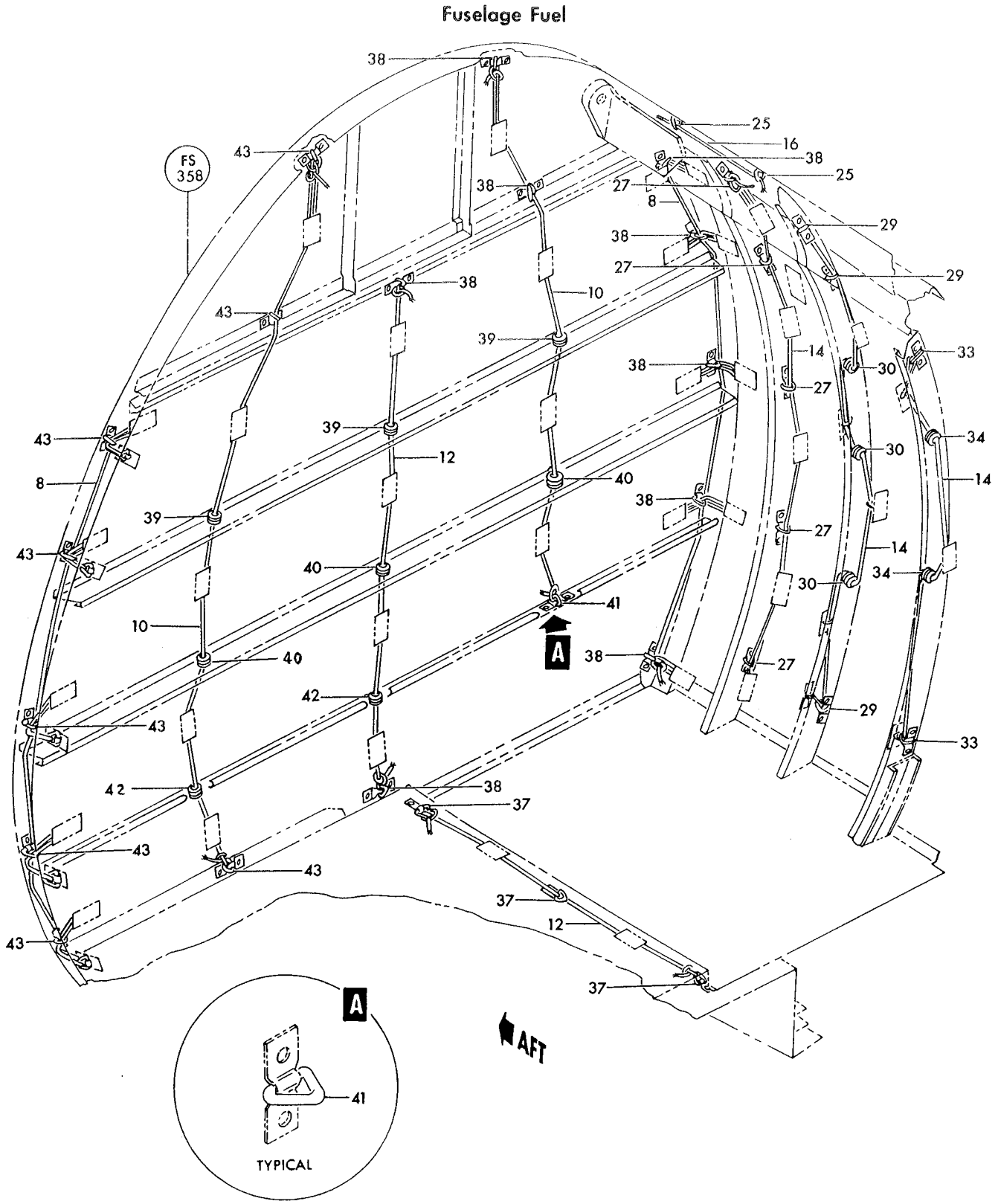

Figure 101—Auxiliary Fuel Tank Attachments (Sheet 1 of 3)

Fuselage Fuel

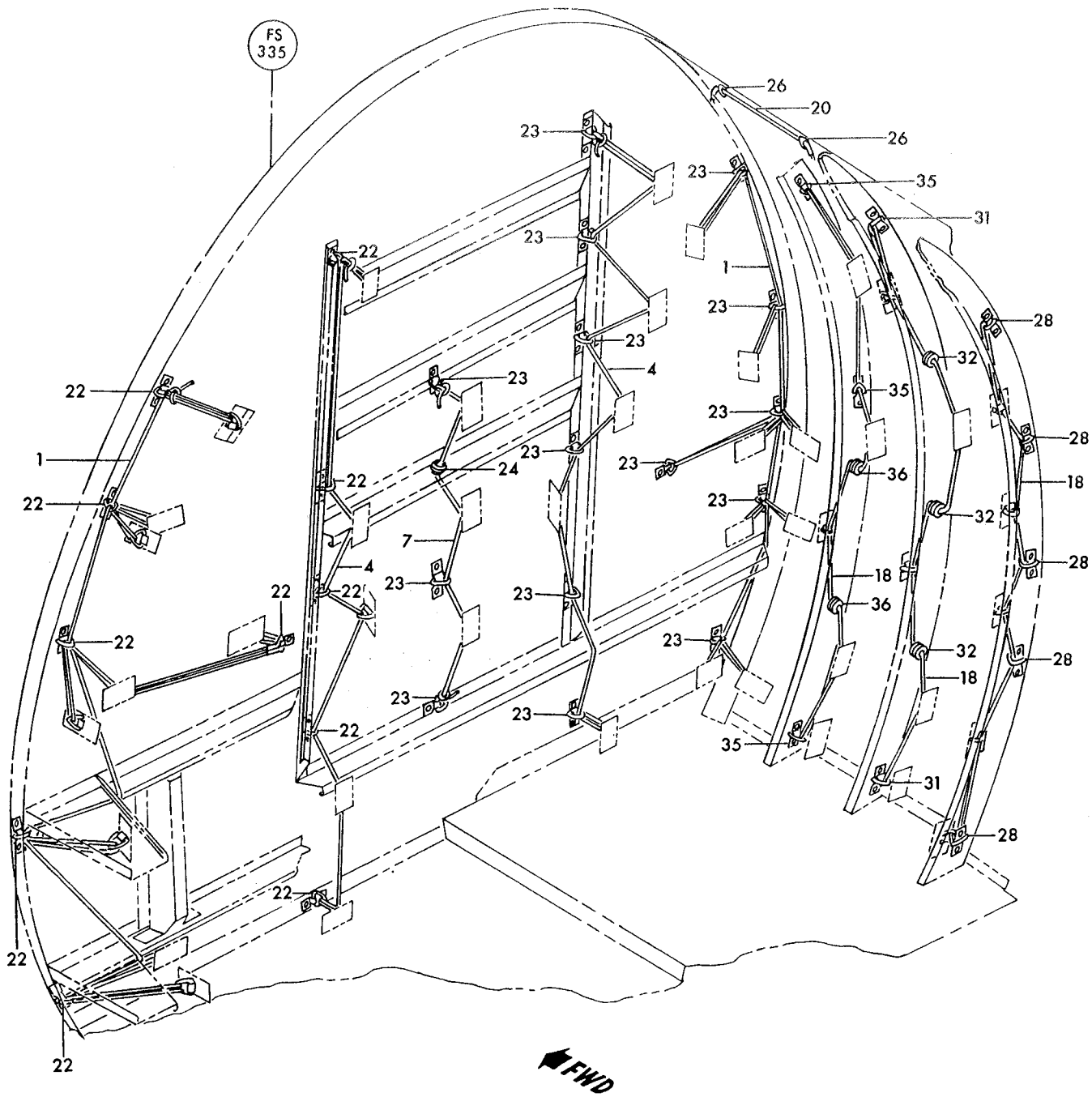

Figure 101—Auxiliary Fuel Tank Attachments (Sheet 2 of 3)

Fuselage Fuel

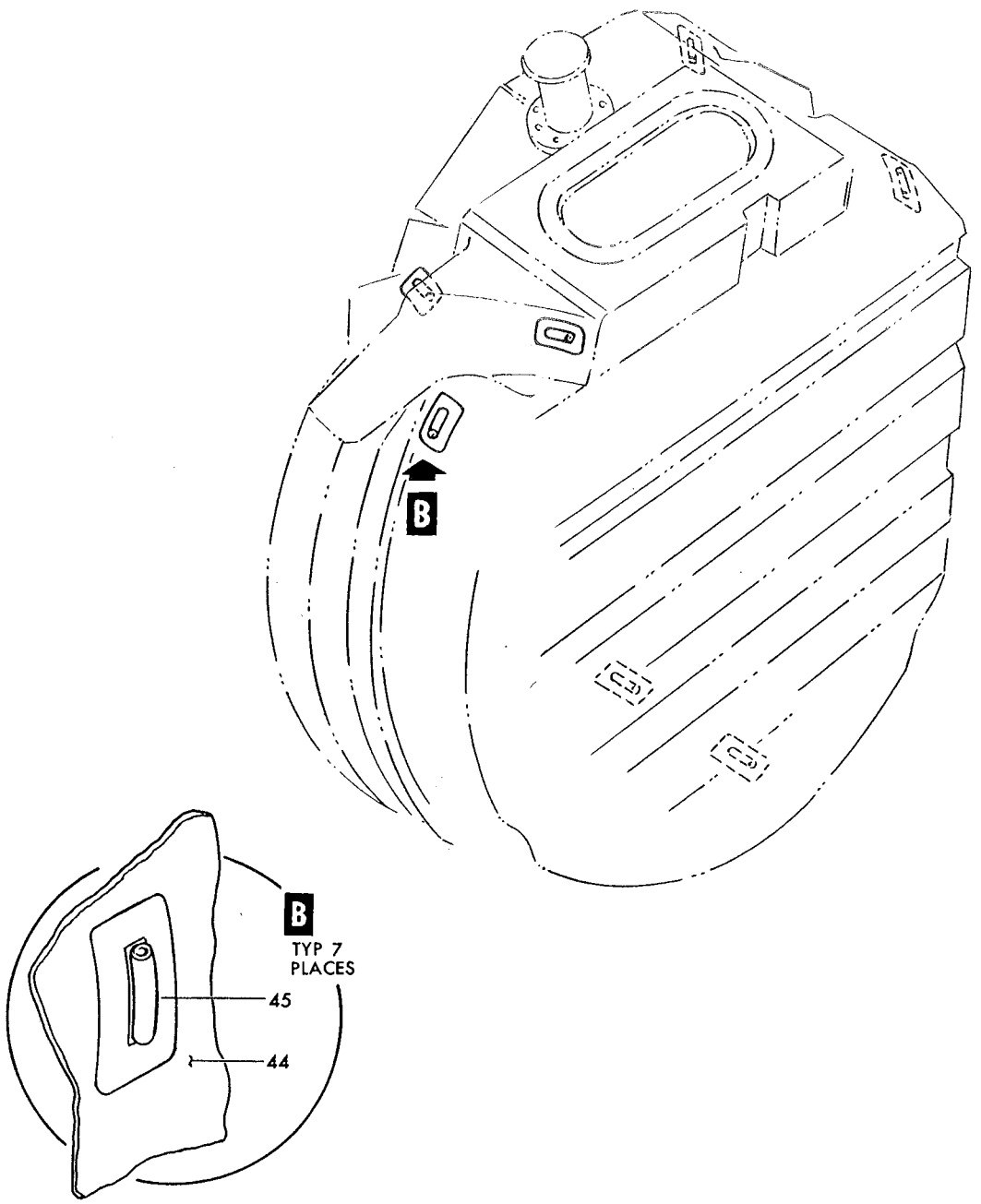

Figure 101—Auxiliary Fuel Tank Attachments (Sheet 3 of 3)

Figura e particolare	NDR	DENOMINAZIONE	Quant.	Codice applicab.
101	764207	STRAP, fuel cell hanger	3	
-36	GF5-175CN	GROMMET, dzus (72794)	2	
	785347-19	TANK ATTACHMENT INSTL, auxiliary fuel lacing *(see fig. 39 for reqd)*	REF	
-37	764206	RING, fuel cell hanger delta	3	
	764509	STRAP, fuel cell hanger	3	
	769335-113	BULKHEAD ASSY, fuselage station 358 forward LH *(see fig. 44 for reqd)*	REF	
	785347-101	TANK ATTACHMENT INSTL, auxiliary fuel lacing	1	
-38	764206	RING, fuel cell hanger delta	9	
	764207	STRAP, fuel cell hanger	7	
	764509	STRAP, fuel cell hanger	2	
	769335-63	STIFFENER ASSY, fuselage station 358	1	
	785347-13	GROMMET INSTL, auxiliary fuel tank	3	
-39	GF5-175CN	GROMMET, dzus (72794)	1	
	769335-65	STIFFENER ASSY, fuselage station 358	1	
	785347-13	GROMMET INSTL, auxiliary fuel tank	3	
-40	GF5-175CN	GROMMET, dzus (72794)	1	
	769335-67	STIFFENER ASSY, fuselage station 358	1	
	785347-17	TANK ATTACHMENT INSTL, auxiliary fuel lacing	1	
-41	764206	RING, fuel cell hanger delta	1	
	764207	STRAP, fuel cell hanger	1	
	785347-13	GROMMET INSTL, auxiliary fuel tank	2	
-42	GF5-175CN	GROMMET, dzus (72794)	1	
	769335-115	BULKHEAD ASSY, fuselage station 358 forward RH *(see fig. 44 for reqd)*	REF	6701-6765
	769335-141	BULKHEAD ASSY, fuselage station 358 forward RH *(see fig. 44 for reqd)*	REF	6766-
	785347-102	TANK ATTACHMENT INSTL, auxiliary fuel lacing	1	
-43	764206	RING, fuel cell hanger delta	8	
	764207	STRAP, fuel cell hanger	7	
	764509	STRAP, fuel cell hanger	1	
-44	36925-5	TANK ASSY, fuselage auxiliary fuel (A0043) (05476) (Lockheed spec dwg 634258-117) *(see fig. 100 for reqd)*	REF	
-45	38540	FERRULE, fuel tank (05476) (Lockheed spec dwg 634259-5)	7	
	764206-1	RING, fuel cell hanger	91	

A - Only for FB

Figura e particolare	NDR	1 2 3 4 5 6 7 DENOMINAZIONE	Quant.	Codice applicab.
		FORWARD MAIN FUEL TANK INTERNAL PIPING AND EQUIPMENT		
102	850534-101	. TANK INSTL, forward main fuel (NHA 849138-101) *(see fig. 103)*	1	
- 1	36943	. . TANK ASSY, forward main fuel (A0043) (05476) (Lockheed spec dwg 634259-105) *(see fig. 100, 103 and 104)*	1	
		Attaching Parts		
- 3	LS881-6	. . WASHER (36659)	68	
- 4	AN960-416L	. . WASHER (88044)	28	
- 5	MS21042L3	. . NUT (96906)	68	
- 6	MS21042L4	. . NUT (96906)	28	
- 6A	38915	. . . FLAPPER, forward main fuel tank (05476) (Lockheed spec dwg 633950-10)	3	
- 7	MS29513-259	. . PACKING (96906)	3	
- 8	797455-1	. . STOP, fore and aft fuel tanks interconnect flapper	3	
- 9	851159-101	. . COVER ASSY, forward main fuel tank manhole *(see fig. 103)*	1	
		Attaching Parts		
	AN960-416L	. . WASHER (88044)	20	
	MS21042L4	. . NUT (96906)	20	
- 10	SRP119	. . GASKET, fuel tank manhole cover O Ring (17991) (Lockheed spec dwg 750418-3) (alternate to SRCBZ127C and 026861)	1	
	SRC-BZ1270	. . GASKET, fuel tank manhole cover O Ring (95272) (Lockheed spec dwg 750418-3) (alternate to SRP119 and 026861)	REF	
	026861	. . GASKET, fuel tank manhole cover O Ring (83259) (Lockheed spec dwg 750418-3) (alternate to SRP119 and SRCBZ127C)	REF	
- 11	11-954-81	. . VALVE, vent fuel tank float (82267) (Lockheed spec dwg 633953-7) (see T.O. 6J15-5-30-3)	1	
- 12	11-954-201	. . VALVE, vent fuel tank float (82267) (Lockheed spec dwg 633953-11) (see T.O. 6J15-5-30-3)	1	
		Attaching Parts		
- 13	AN960-416L	. . WASHER (88044)	4	
- 14	MS21042L4	. . NUT (96906)	4	
- 15	MS29513-223	. . PACKING (96906)	4	
- 16	MS29513-236	. . PACKING (96906)	2	
- 17	850534-103	. . PUMP ASSY, forward main fuel	2	
- 18	850534-105	. . PUMP ASSY, aft main fuel.	2	
		Attaching Parts		
	AN960-416L	. . WASHER (88044)	12	
- 19	MS21042L4	. . NUT (96906)	12	
	784875-1	. . . HARNESS ASSY, fuel boost pump.	1	
- 20	MS25183-14S5P	. . . . CONNECTOR, (P133) plug (low level switch P-55, P-56, P-57, P-58, disc) (96906)	1	
- 21	60-065B	. . . . PUMP, (B18) submerged fuel booster (A0303) (81982) (Lockheed spec dwg 634256-1) (alternate to 207500) (see T.O. 6J10-3-73-4)	1	
	207500	. . . . PUMP, (B18) submerged fuel booster (59875) (Lockheed spec dwg 634256-1) (alternate to 60-065B) (see T.O. 6J10-3-104-4)	REF	
- 22	740B3	. . . VALVE, poppet drain (forward) (91511) (Lockheed spec dwg 633971-3) (see T.O. 6J15-4-56-3)	1	
- 23	740B5	. . . VALVE, poppet drain (aft) (91511) (Lockheed spec dwg 633971-5) (see T.O. 6J15-4-56-3)	1	
- 24	MS29512-4	. . . PACKING (96906)	1	
- 25	AN924-4D	. . . NUT (88044)	1	
- 26	MS29513-263	. . PACKING (96906)	4	
- 27	740B1	. . VALVE, poppet drain (91511) (Lockheed spec dwg 633971-1) (see T.O. 6J15-4-56-3)	4	
- 28	MS29512-06	. . PACKING (96906)	4	
- 29	AN924-6D	. . NUT (88044)	4	
- 30	784385-5	. . TRANSMITTER ASSY, forward fuel *(see fig. 103 for reqd)*	REF	
- 31	FG232A2	. . . TRANSMITTER, (TR10) fuel liquid quantity (A0019) (94580) (Lockheed spec dwg 624356-3) (see T.O. 5L13-3-4-13)	1	

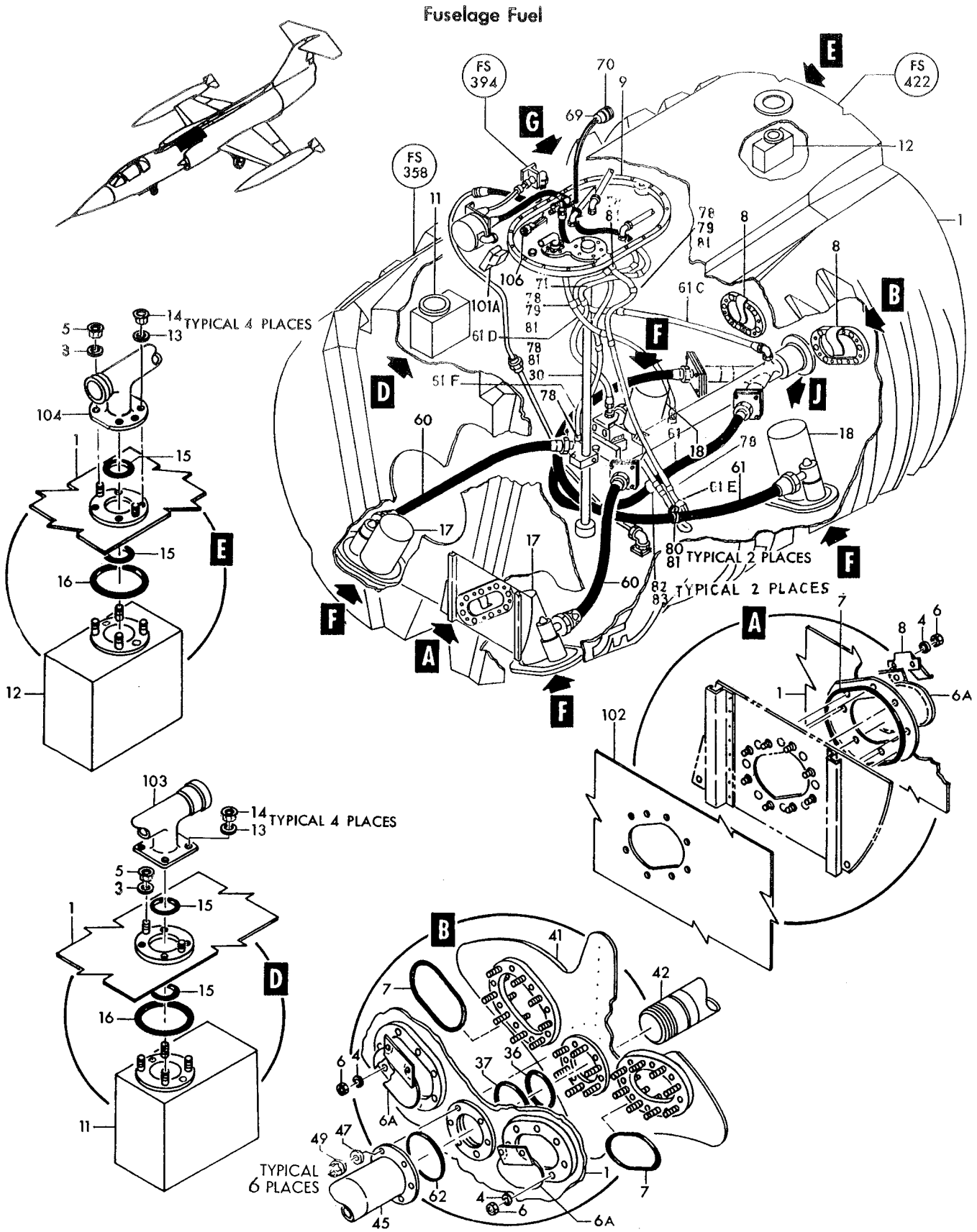

Figure 102—Forward Main Fuel Tank Internal Piping and Equipment (Sheet 1 of 2)

Fuselage Fuel

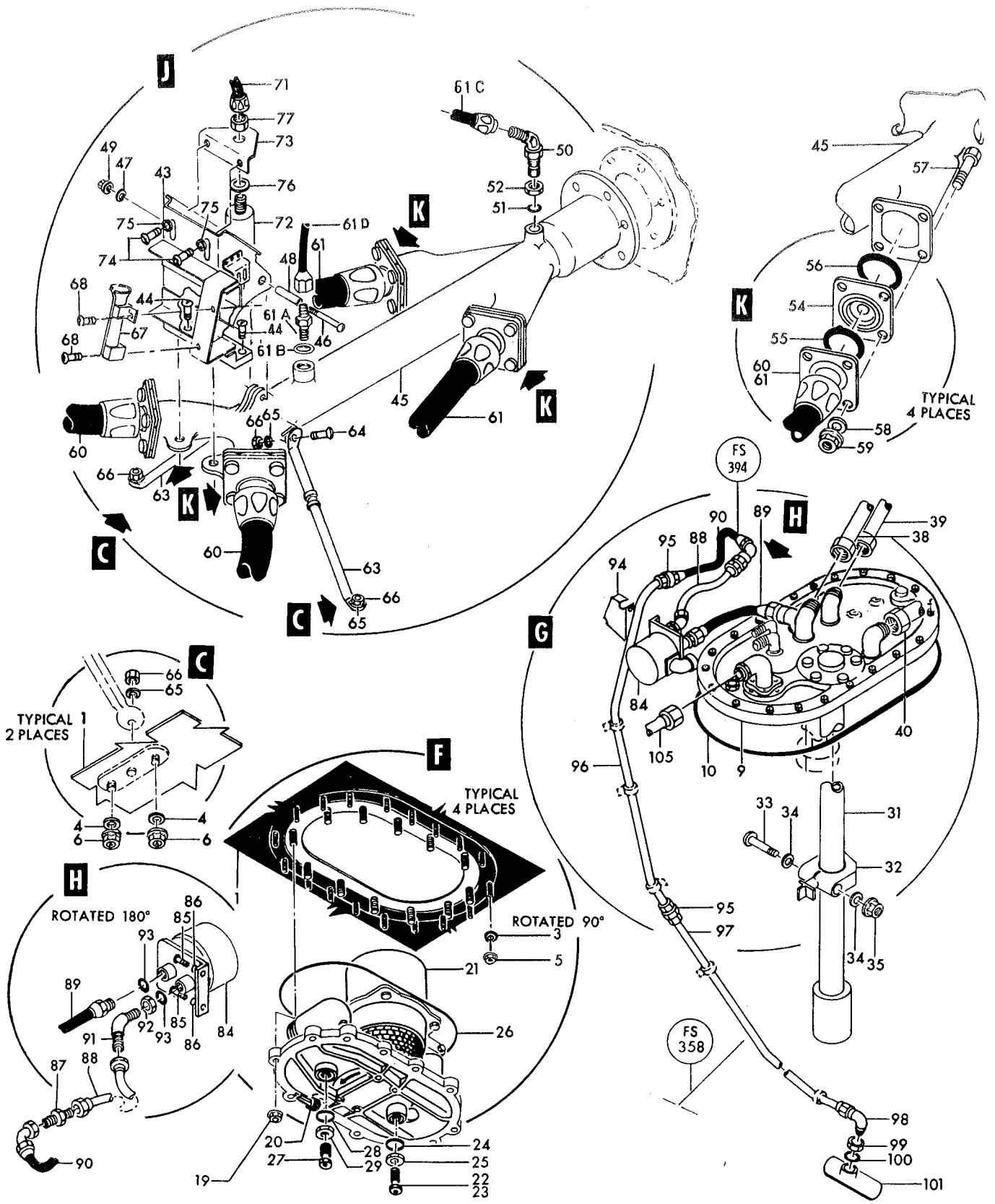

Figure 102—Forward Main Fuel Tank Internal Piping and Equipment (Sheet 2 of 2)

Figura e particolare	NDR	DENOMINAZIONE	Quant.	Codice applicab.
102- 32	770167-1	CLAMP ASSY, fuel transmitter	1	
	770168-1	CLAMP, transmitter sensing support	1	
	770170-1	CLAMP, transmitter sensing support	1	
	AN515B8R16	SCREW (88044)	1	
	MS21042L08	NUT (96906)	1	
- 33	AN23-26A	BOLT (88044)	1	
- 34	AN960-10L	WASHER (88044)	2	
- 35	MS21042L3	NUT (96906)	1	
- 36	MS29513-235	PACKING (96906)	1	
- 37	MS29513-248	PACKING (96906)	1	
	770410-1	LINER ASSY, special stores fuselage station 358 forward main tank	1	
	770410-2	LINER ASSY, special stores fuselage station 358 forward main tank	1	
	770410-3	LINER, special stores fuselage station 358 forward main tank	1	
	770410-4	LINER, special stores fuselage station 358 forward main tank	1	
- 38	779274-37	TUBE ASSY, fuel bleed *(see fig. 109 for reqd)*	REF	
- 39	779274-39	TUBE ASSY, fuel bleed *(see fig. 109 for reqd)*	REF	
- 40	851084-111	TUBE ASSY, fuel bleed *(see fig. 109 for reqd)*	REF	
- 41	770870-1	WEB ASSY, fuselage station 422 fuel tank seal *(see fig. 40 for reqd)*	REF	
- 42	762002-8	TUBE ASSY, forward main fuel tank *(see fig. 112 for reqd)*	REF	
	851069-101	EQUIPMENT INSTL, internal main fuel tank (forward) (NHA 849138-101)	1	
- 43	774248-1	BRACKET ASSY, switch and valve	1	
		Attaching Parts		
- 44	NAS623-3-6	SCREW (80205)	2	
	AN960-10	WASHER (88044)	2	
	MS21042L3	NUT (96906)	2	
		*		
	851069-103	MANIFOLD ASSY, main fuel	1	
- 45	851068-101	MANIFOLD, forward fuel tank *(see fig. 112)*	1	
		Attaching Parts		
- 46	NAS1104-15	BOLT (80205)	1	
- 47	AN960-416L	WASHER (88044)	7	
- 48	NAS43DD4-16	SPACER (80205)	1	
- 49	MS21042L4	NUT (96906)	7	
		*		
- 50	AN837-4D	ELBOW (88044)	1	
- 51	MS29512-4	PACKING (96906)	1	
- 52	AN924-4D	NUT (88044)	1	
- 54	308800	VALVE, fuel check plate (A0809) (96124) (Lockheed spec dwg 633959-3) (alternate to 1111-558228) (see LR6-15266-273-3)	4	
	1111-558228	VALVE, fuel check plate (92003) (Lockheed spec dwg 633959-3) (see T.O. 6J15-2-6-13) (alternate to 308800)	REF	
- 55	MS29513-223	PACKING (96906)	4	
- 56	MS29513-230	PACKING (96906)	4	
- 57	NAS1105-13D	BOLT (80205)	16	
- 58	AN960D516	WASHER (88044)	16	
- 59	MS21042L5	NUT (96906)	16	
- 60	601032-32-20D0332	HOSE ASSY, fuel boost pump (00624) (Lockheed spec dwg 750558-5) (alternate to 601930N0332 and 130045-20-0332)	2	
	601930N0332	HOSE ASSY, fuel boost pump (00624) (Lockheed spec dwg 750558-5) (alternate to 601032-32-20D0332 and 130045-20-0332)	REF	
	130045-20-0332	HOSE ASSY, fuel boost pump (98441) (Lockheed spec dwg 750558-5) (alternate to 601032-32-20D0332 and 601930N0332)	REF	
- 61	601032-32-20D0380	HOSE ASSY, fuel boost pump (00624) (Lockheed spec dwg 750558-7) (alternate to 601930N0380 and 130045-20-0380)	2	
	601930N0380	HOSE ASSY, fuel boost pump (00624) (Lockheed spec dwg 750558-7) (alternate to 601032-32-20D0380 and 130045-20-0380)	REF	
	130045-20-0380	HOSE ASSY, fuel boost pump (98441) (Lockheed spec dwg 750558-7) (alternate to 601032-32-20D0380 and 601930N0380)	REF	
- 61A	AN815-6D	UNION (88044)	1	
- 61B	MS29512-06	PACKING (96906)	1	

Figura e particolare	NDR	DENOMINAZIONE 1 2 3 4 5 6 7	Quant.	Codice applicab.
102- 61C	601392-4-0490	HOSE ASSY (manifold) (00624)	1	
- 61D	601392-6D-0470	HOSE ASSY (fuel pressure) (00624)	1	
- 61E	AE1003937J-0570	HOSE ASSY (fuel return) (00624)	1	
- 61F	AE1003937G-0570	HOSE ASSY (fuel return) (00624)	1	
- 62	MS29513-235	PACKING (96906)	1	
- 63	762926	SUPPORT ASSY, forward tank manifold fuel fitting	2	
		Attaching Parts		
- 64	NAS623-4-7	SCREW (80205)	1	
- 65	AN960-416L	WASHER (88044)	2	
- 66	MS21042L4	NUT (96906)	2	
- 67	770171-1	SUPPORT, fuel transfer transmitter	1	
		Attaching Parts		
- 68	NAS623-3-4	SCREW (80205)	2	
	AN960-10L	WASHER (88044)	4	
	MS21042L3	NUT (96906)	2	
	852800-101	HARNESS ASSY, main fuel tank low level warning switch	1	
- 69	CA3106K10SL4S	CONNECTOR, (P134) plug (P61 low level warning switch) (71468)	1	
- 70	MS3057-4A	CLAMP (96906)	1	
- 71	601392-6D0360	HOSE ASSY (low level warning switch) (00624)		
- 72	381	SWITCH, (S88) liquid level float actuated (A1582) (alternate to F8300-6)	1	
	F8300-6	SWITCH, (S88) liquid level float actuated (50625) (Lockheed spec dwg 633963-1) (alternate to 381A)	REF	
- 73	798485-101	CLIP ASSY, switch support	1	
		Attaching Parts		
- 74	AN520-10R10	SCREW (88044)	2	
- 75	AN960-10L	WASHER (88044)	2	
- 76	AN960D916	WASHER (88044)	1	
- 77	AN924-6D	NUT (88044)	1	
- 78	TA778D9N	CLAMP (84971)	7	
- 79	TA778D7N	CLAMP (84971)	2	
- 80	TA778D6N	CLAMP (84971)	2	
- 81	TA778D13N	CLAMP (84971)	6	
		Attaching Parts		
	NAS603-10	SCREW (80205)	1	
	AN960-10L	WASHER (88044)	1	
	MS21042L3	NUT (96906)	1	
- 82	AN742D6	CLAMP (88044)	2	
- 83	TA778D22N	CLAMP (84971)	2	
		Attaching Parts		
	NAS603-8	SCREW (80205)	1	
	AN960-10L	WASHER (88044)	1	
	MS21042L3	NUT (96906)	1	
	774369-501	SWITCH INSTL, forward main fuel tank pressure *(see fig. 60 for reqd)*	REF	
- 84	40095-1	SWITCH, (S90) fuel pressure (98505) (Lockheed spec dwg 633954-11) (alternate to AL58K1001A15) (see T.O. 8S2-2-104-2)	1	
	AL58K1001A15	SWITCH, (S90) fuel pressure (73760) (Lockheed spec dwg 633954-11) (alternate to 40095-1) (see T.O. 8S2-2-42-3)	REF	
		Attaching Parts		
- 85	AN520-10R10	SCREW (88044)	2	
- 86	AN960D10	WASHER (88044)	2	
- 87	AN815-4D	UNION (88044)	1	
- 88	774152-87	TUBE ASSY, drain fuel pressure transmitter	1	
- 89	601058-4-0100	HOSE ASSY (fuel pressure switch) (00624)	1	
- 90	601002-4S0080	HOSE ASSY (fuel pressure switch) (00624)	1	

Figura e particolare	NDR	1 2 3 4 5 6 7 DENOMINAZIONE	Quant.	Codice applicab.
102- 91	AN837-4D	. . ELBOW (88044)	1	
- 92	AN924-4D	. . NUT (88044)	1	
- 93	MS29512-4	. . PACKING (96906)	2	
	760214-71	. COVER ASSY, fuel tank *(see fig. 60 for reqd)*	REF	
	774369-3	. . BRACKET INSTL, forward main fuel tank pressure	1	
- 94	774381-1	. . . BRACKET ASSY, pressure switch support	1	
	851087-101	. PLUMBING INSTL, main fuel tank pressure switch (RH only) *(see fig. 31 for reqd)*	REF	
- 95	AN815-4D	. . UNION (88044)	2	
- 96	762788-37	. . TUBE ASSY, fuel pressure transmitter	1	
- 97	785201-115	. . TUBE ASSY, fuel pressure transmitter	1	
- 98	AN833-4D	. . ELBOW (88044)	1	
- 99	AN924-4D	. . NUT (88044)	1	
-100	MS29512-4	. . PACKING (96906)	1	
-101	726539-3	. . FLANGE, pressure switch vent	1	
-101A	852058-101	A. . GUARD	1	6701-6802
	852058-103	. . GUARD	1	6803-
		Attaching Parts		
	NAS623-3-7	A. . SCREW (80205)	1	
	MS21042-3	A. . NUT (96906)	1	
-102	36925-5	. TANK ASSY, fuselage auxiliary fuel (A0043) (05476) (Lockheed spec dwg 634258-117) *(see fig. 100 for reqd)*	REF	
-103	775479-1	. TEE ASSY, vent line *(see fig. 109 for reqd)*	REF	
-104	772066-1	. MANIFOLD ASSY, vent line valve support *(see fig. 110 for reqd)*	REF	
-105	774152-73	. TUBE ASSY, fuel transfer *(see fig. 109 for reqd)*	REF	
	849585-101	. HARNESS ASSY, aft quantity transmitter probe to fuel cell splice *(see fig. 193 for reqd)*	REF	
-106	CA3106ER10SL4S	. . CONNECTOR, (P6) plug (boost pump fail warning switch) (71468)	1	

A - Reqd per AA.1F-104-OT-676B

Figura e particolare	NDR	DENOMINAZIONE 1 2 3 4 5 6 7	Quant.	Codice applicab.
		FORWARD MAIN FUEL TANK MANHOLE COVER		
103	850534-101	. TANK INSTL, forward main fuel *(see fig. 102 for reqd)*	REF	
-1	851159-101	. . COVER ASSY, forward main fuel tank manhole *(see fig. 102 for reqd)*	REF	
-2	851158-101	. . . COVER ASSY, forward main fuel tank manhole	1	6701-6815
	851158-105	. . . COVER ASSY, forward main fuel tank manhole	1	6816-
-3	751060-1	. . . ELBOW ASSY, main tank fuel transfer	1	
-4	MS29513-220	. . . PACKING (96906)	1	
-5	751128-1	. . . TUBE ASSY, fuel transfer	1	
-6	12-954-61	. . . VALVE, fuel float (82267) (Lockheed spec dwg 633962-3) (see T.O. 6J15-10-83-13)	1	
-7	MS29513-221	. . . PACKING (96906)	2	
-8	NAS1304-3H	. . . BOLT (80205)	4	
-9	AN960-416L	. . . WASHER (88044)	12	
-10	MS21042L4	. . . NUT (96906)	8	
-11	AN833-6D	. . . ELBOW (88044)	4	
-12	728145-1	. . . UNION, fuel tank cover (make from AN832-6D)	2	
-13	MS29512-6	. . . GASKET (96906)	6	
-14	AN924-6D	. . . NUT (88044)	6	
-15	AN833-10D	. . . ELBOW (88044)	1	
-16	MS29512-8	. . . GASKET (96906)	1	
-17	AN924-10D	. . . NUT (88044)	1	
-18	AN837-4D	. . . ELBOW (88044)	1	
-19	MS29512-4	. . . GASKET (96906)	1	
-20	AN924-4D	. . . NUT (88044)	1	
-21	779274-41	. . . TUBE ASSY, fuel return	1	
	785727-1	. . . HARNESS ASSY, main fuel tank precheck valve	1	
-22	MS3106K14S7P	. . . . CONNECTOR, (P135) plug (fuel precheck valve P-62) (96906)	1	
	MS3057-6A	. . . . ADAPTER (96906)	1	
-23	6-256-61	. . . . VALVE, (L2) fuel level control float (82267) (Lockheed spec dwg 634234-1) (see T.O. 6J15-5-25-3)	1	
-24	787388-1	. . . . SUPPORT, forward tank pilot valve	1	
-25	NAS623-4-6	. . . . SCREW (80205)	4	
	AN960D416	. . . . WASHER (88044)	20	
-26	601396H0126	. . . . HOSE ASSY (fuel level control float valve) (00624)	2	
-27	MS29512-8	. . . . GASKET (96906)	2	
-28	AN919-10D	. . . . REDUCER (88044)	2	
-29	601392-6D0206	. . . . HOSE ASSY (fuel level) (00624)	1	
-30	AB903F5	. . . SCREW (02310)	4	
	AN742D10	. . . CLAMP (88044)	1	6701-6790
	TA778D13N	. . . CLAMP (84971)	1	6791-
	TA778D9N	. . . CLAMP (84971)	4	
	TA778D20	. . . CLAMP (84971)	1	
	NAS603-8	. . . SCREW (80205)	2	
	NAS603-10	. . . SCREW (80205)	1	
	AN960-10L	. . . WASHER (88044)	3	
	MS21042L3	. . . NUT (96906)	3	
-31	784385-5	. . TRANSMITTER ASSY, forward main fuel *(see fig. 102)*	1	
		Attaching Parts		
	AN960-416L	. . WASHER (88044)	6	
	MS21042L4	. . NUT (80205)	6	
		*		
-32	MS29513-231	. . PACKING (96906)	1	
-33	36943	. . TANK ASSY, forward main fuel (A0043) (05476) (Lockheed spec dwg 634259-105) *(see fig. 102 for reqd)*	REF	
	849585-101	. HARNESS ASSY, aft quantity transmitter probe to fuel cell splice *(see fig. 193 for reqd)*	REF	
-34	1-672-1	. . CONNECTOR, (P95) plug (forward fuel cell quantity transmitter probe) (95712)	2	
-35	1-697-1	. . CONNECTOR, (P93) plug (forward fuel cell quantity transmitter probe) (95712)	1	
-36	1-690-1	. . CONNECTOR, (P94) plug (forward fuel cell quantity transmitter probe) (95712)	2	

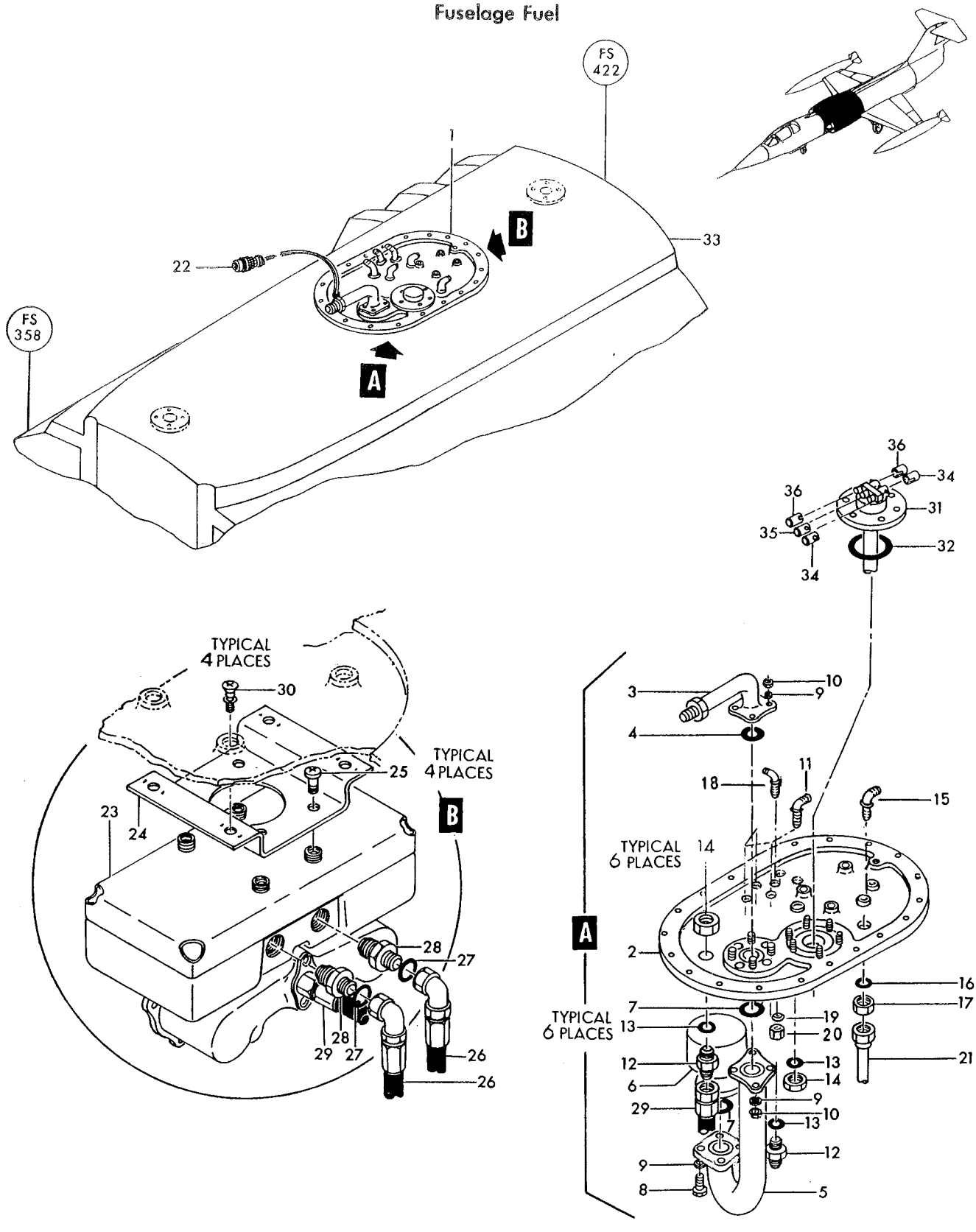

Figure 103—Forward Main Fuel Tank Manhole Cover

Figura e particolare	NDR	1 2 3 4 5 6 7 DENOMINAZIONE	Quant.	Codice applicab.
		FORWARD MAIN FUEL TANK ATTACHMENTS		
104	769580-1	. TANK ATTACHMENT INSTL, LH 1/2 pan special stores forward main fuel *(see fig. 40 for reqd)*	REF	
	769580-2	. TANK ATTACHMENT INSTL, RH 1/2 pan special stores forward main fuel *(see fig. 40 for reqd)*	REF	
	764207	. . STRAP, fuel cell hanger	11	
- 1	764206	. . RING, fuel cell hanger	11	
	769580-107	. TANK ATTACHMENT INSTL, mid fuselage station 358 bhd rings special stores forward fuel *(see fig. 44 for reqd)*	REF	
	764207	. . STRAP, fuel cell hanger	10	
	764509	. . STRAP, fuel cell hanger	2	
- 2	764206	. . RING, fuel cell hanger	12	
	769580-5	. ATTACHMENT INSTL, special stores forward main fuel tank cover *(see fig. 60 for reqd)*	REF	
	764207	. . STRAP, fuel cell hanger	8	
- 3	764206	. . RING, fuel cell hanger	8	
- 4	GF5-175CN	. . GROMMET, dzus (72794)	4	
	769580-105	. TANK ATTACHMENT INSTL, fuselage station 358 special stores forward main fuel LH (NHA 849138-101)	1	
	769580-106	. TANK ATTACHMENT INSTL, fuselage station 358 special stores forward main fuel RH (NHA 849138-101)	1	
	764207	. . STRAP, fuel cell hanger	7	
- 5	764206	. . RING, fuel cell hanger	7	
	769662-3	. SEGMENT ASSY, fuselage station 364 LH *(see fig. 40 for reqd)*	REF	
	769662-4	. SEGMENT ASSY, fuselage station 364 RH *(see fig. 40 for reqd)*	REF	
	769580-9	. . TANK ATTACHMENT INSTL, fuselage station 364 special stores forward main fuel LH	1	
	769580-10	. . TANK ATTACHMENT INSTL, fuselage station 364 special stores forward main fuel RH	1	
	764207	. . . STRAP, fuel cell hanger	1	
- 6	764206	. . . RING, fuel cell hanger	1	
- 7	GF5-175CN	. . . GROMMET, dzus (72794)	4	
	769663-103	. SEGMENT ASSY, fuselage station 370 LH *(see fig. 40 for reqd)*	REF	
	769663-104	. SEGMENT ASSY, fuselage station 370 RH *(see fig. 40 for reqd)*	REF	
	769580-11	. . TANK ATTACHMENT INSTL, fuselage station 370 special stores forward main fuel LH	1	
	769580-12	. . TANK ATTACHMENT INSTL, fuselage station 370 special stores forward main fuel RH	1	
	764509	. . . STRAP fuel cell hanger	1	
- 8	764206	. . . RING, fuel cell hanger	1	
- 9	GF5-175CN	. . . GROMMET, dzus (72794)	4	
	769664-103	. SEGMENT ASSY, fuselage station 376 LH *(see fig. 40 for reqd)*	REF	
	769664-104	. SEGMENT ASSY, fuselage station 376 RH *(see fig. 40 for reqd)*	REF	
	769580-13	. . TANK ATTACHMENT INSTL, fuselage station 376 special stores forward main fuel LH	1	
	769580-14	. . TANK ATTACHMENT INSTL, fuselage station 376 special stores forward main fuel RH	1	
	764509	. . . STRAP, fuel cell hanger	1	
	764207	. . . STRAP, fuel cell hanger	4	
-10	764206	. . . RING, fuel cell hanger	5	
-11	GF5-175CN	. . . GROMMET, dzus (72794)	1	
	769665-103	. SEGMENT ASSY, fuselage station 382 LH *(see fig. 40 for reqd)*	REF	
	769665-104	. SEGMENT ASSY, fuselage station 382 RH *(see fig. 40 for reqd)*	REF	
	769580-15	. . TANK ATTACHMENT INSTL, fuselage station 382 special stores forward main fuel LH	1	
	769580-16	. . TANK ATTACHMENT INSTL, fuselage station 382 special stores forward main fuel RH	1	
	764207	. . . STRAP, fuel cell hanger	4	
-12	764206	. . . RING, fuel cell hanger	4	
-13	GF5-175CN	. . . GROMMET, dzus (72794)	1	

Fuselage Fuel

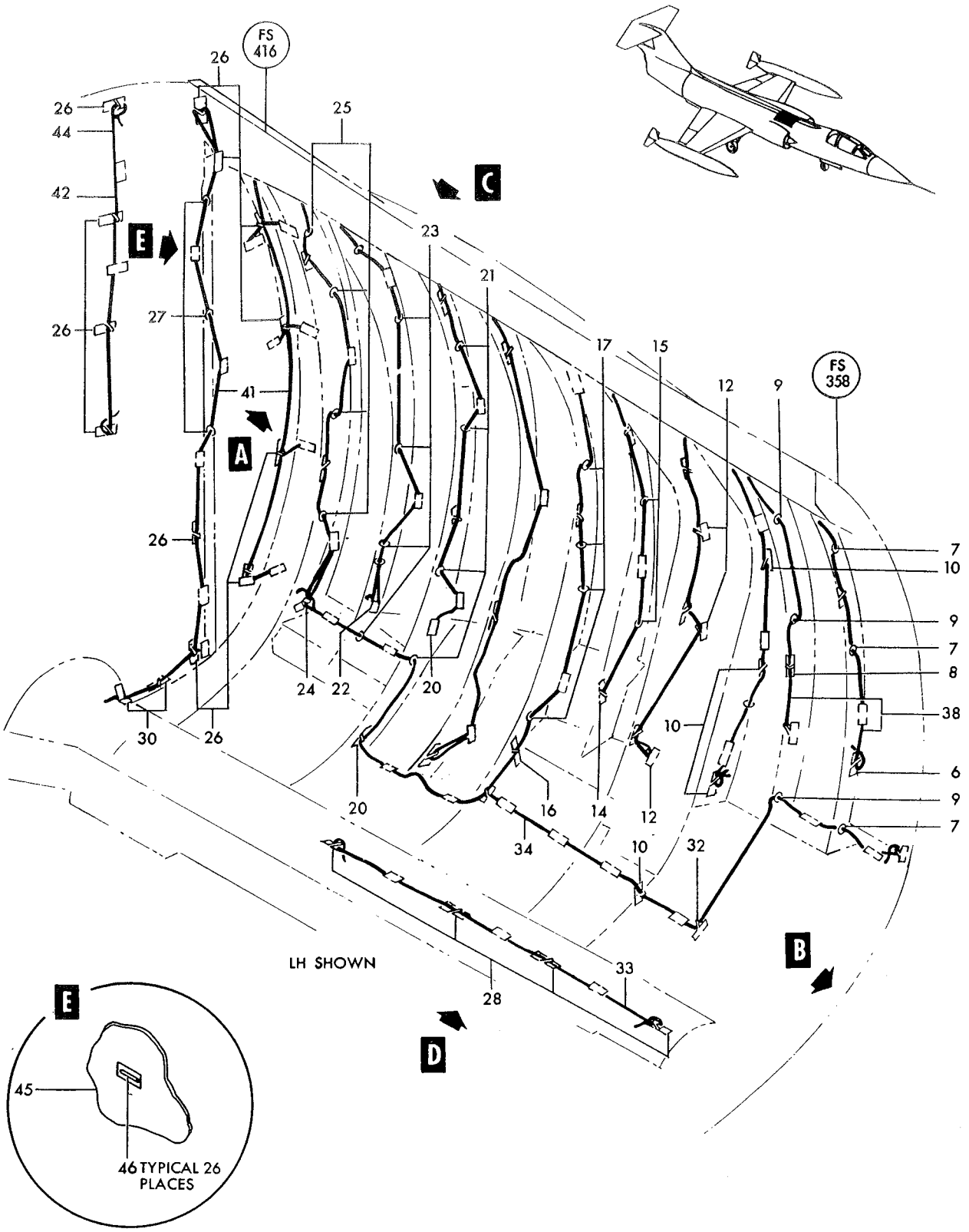

Figure 104—Forward Main Fuel Tank Attachments (Sheet 1 of 2)

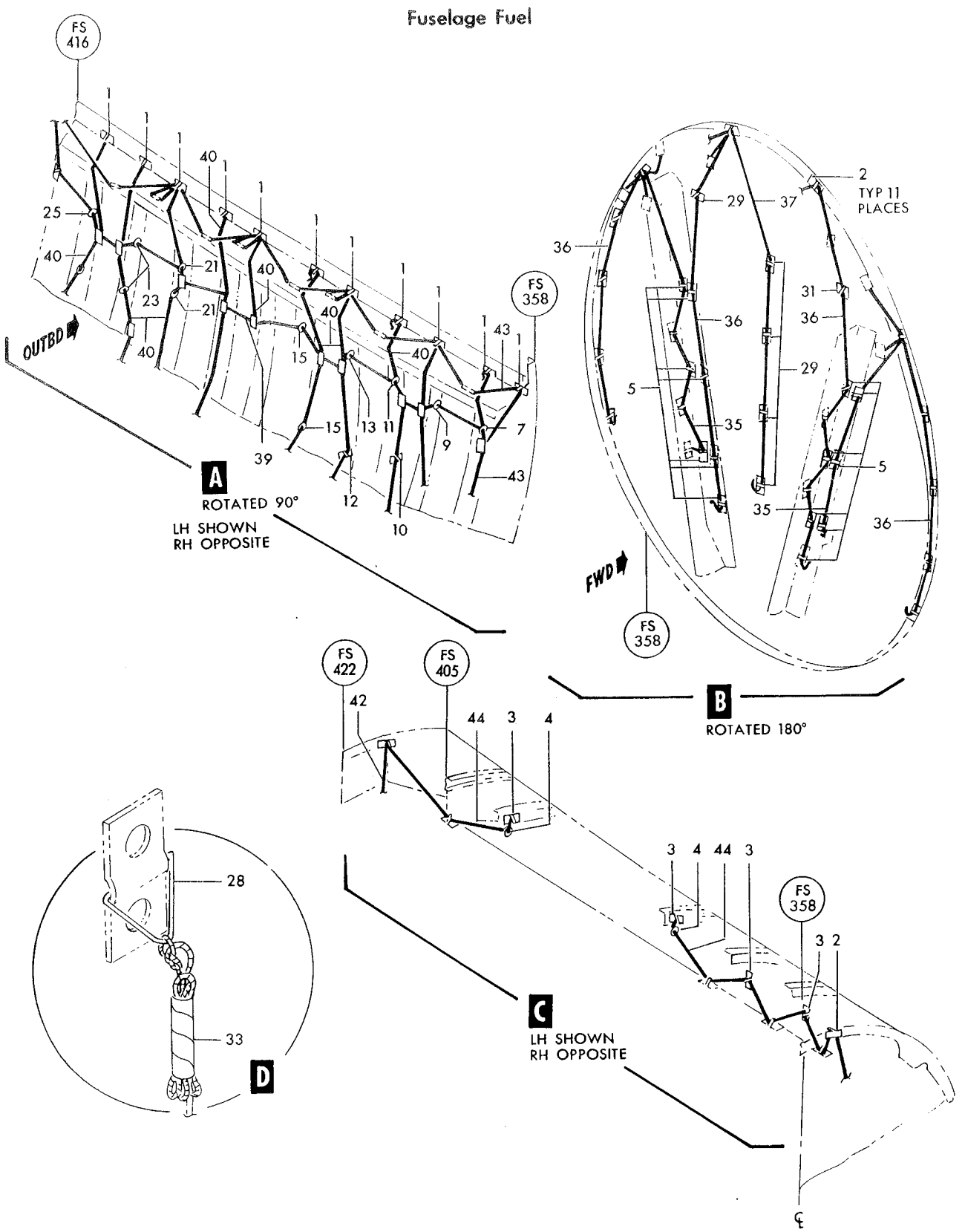

Figure 104—Forward Main Fuel Tonk Attachments (Sheet 2 of 2)

Figura e particolare	NDR	1 2 3 4 5 6 7 DENOMINAZIONE	Quant.	Codice applicab.
104	769666-103	SEGMENT ASSY, fuselage station 388 LH *(see fig. 40 for reqd)*	REF	
	769666-104	SEGMENT ASSY, fuselage station 388 RH *(see fig. 40 for reqd)*	REF	
	769580-17	TANK ATTACHMENT INSTL, fuselage station 388 special stores forward main fuel LH	1	
	769580-18	TANK ATTACHMENT INSTL, fuselage station 388 special stores forward main fuel RH	1	
	764207	STRAP, fuel cell hanger	1	
-14	764206	RING fuel cell hanger	1	
-15	GF5-175CN	GROMMET, dzus (72794)	4	
	769667-103	SEGMENT ASSY, fuselage station 394 LH *(see fig. 40 for reqd)*	REF	
	769667-104	SEGMENT ASSY, fuselage station 394 RH *(see fig. 40 for reqd)*	REF	
	769580-103	TANK ATTACHMENT INSTL, fuselage station 394 special stores forward main fuel LH	1	
	769580-104	TANK ATTACHMENT INSTL, fuselage station 394 special stores forward main fuel RH	1	
	764207	STRAP, fuel cell hanger	1	
-16	764206	RING, fuel cell hanger	1	
-17	GF5-175CN	GROMMET, dzus (72794)	4	
	769669-103	SEGMENT ASSY, fuselage station 406 LH *(see fig. 40 for reqd)*	REF	
	769669-104	SEGMENT ASSY, fuselage station 406 RH *(see fig. 40 for reqd)*	REF	
	769580-23	TANK ATTACHMENT INSTL, fuselage station 406 special stores forward main fuel LH	1	
	769580-24	TANK ATTACHMENT INSTL, fuselage station 406 special stores forward main fuel RH	1	
	764207	STRAP, fuel cell hanger	2	
-20	764206	RING, fuel cell hanger	2	
-21	GF5-175CN	GROMMET, dzus (72794)	6	
	769670-103	SEGMENT ASSY, fuselage station 411 LH *(see fig. 40 for reqd)*	REF	
	769670-104	SEGMENT ASSY, fuselage station 411 RH *(see fig. 40 for reqd)*	REF	
	769580-25	TANK ATTACHMENT INSTL, fuselage station 411 special stores forward main fuel LH	1	
	769580-26	TANK ATTACHMENT INSTL, fuselage station 411 special stores forward main fuel RH	1	
	764207	STRAP, fuel cell hanger	1	
-22	764206	RING, fuel cell hanger	1	
-23	GF5-175CN	GROMMET, dzus (72794)	6	
	850238-103	SEGMENT ASSY, fuselage station 416 LH *(see fig. 40 for reqd)*	REF	
	850238-104	SEGMENT ASSY, fuselage station 416 RH *(see fig. 40 for reqd)*	REF	
	769580-27	TANK ATTACHMENT INSTL, fuselage station 416 special stores forward main fuel LH	1	
	769580-28	TANK ATTACHMENT INSTL, fuselage station 416 special stores forward main fuel RH	1	
	764207	STRAP, fuel cell hanger	1	
-24	764206	RING,	1	
-25	GF5-175CN	GROMMET, dzus (72794)	5	
	769580-29	TANK ATTACHMENT INSTL, fuselage station 422 special stores forward main fuel LH *(see fig. 40 for reqd)*	REF	
	769580-30	TANK ATTACHMENT INSTL, fuselage station 422 special stores forward main fuel RH *(see fig. 40 for reqd)*	REF	
	764207	STRAP, fuel cell hanger	12	
-26	764206	RING, fuel cell hanger	12	
-27	GF5-175CN	GROMMET, dzus (72794)	3	
	851062-107	LINER INSTL, forward main fuel tank LH (NHA 849140-101)	1	
	851062-109	LINER INSTL, forward main fuel tank RH (NHA 849140-101)	1	
	771389-1	LINER, forward fuel tank fuselage station 358 to 370	1	
	771336-1	LINER, forward fuel tank fuselage station 370 to 376 LH	1	
	771336-2	LINER, forward fuel tank fuselage station 370 to 376 RH	1	
	771337-1	LINER, forward fuel tank fuselage station 376 to 382 LH	1	
	771337-2	LINER, forward fuel tank fuselage station 376 to 382 RH	1	
	771338-101	LINER, forward fuel tank fuselage station 382 to 394 LH	1	

Figura e particolare	NDR	DENOMINAZIONE	Quant.	Codice applicab.
104	771338-102	LINER, forward fuel tank fuselage station 382 to 394 RH	1	
	851117-101	LINER, forward fuel tank fuselage station 394 to 400 LH	1	
	851117-102	LINER, forward fuel tank fuselage station 394 to 400 RH	1	
	851116-101	LINER, forward fuel tank fuselage station 400 to 406 LH	1	
	851116-102	LINER, forward fuel tank fuselage station 400 to 406 RH	1	
	771409-1	LINER, forward fuel tank fuselage station 406 to 411 LH	1	
	771409-2	LINER, forward fuel tank fuselage station 406 to 411 RH	1	
	771410-1	LINER, forward fuel tank fuselage station 411 to 416 LH	1	
	771410-2	LINER, forward fuel tank fuselage station 411 to 416 RH	1	
	770990-101	LINER ASSY, fuselage station 358 to 406 forward fuel tank LH	1	
	770990-102	LINER ASSY, fuselage station 358 to 406 forward fuel tank RH	1	
	770990-103	LINER, fuselage station 358 to 406 forward fuel tank LH	1	
	770990-104	LINER, fuselage station 358 to 406 forward fuel tank RH	1	
	769580-31	TANK ATTACHMENT INSTL, fuel tank liner special stores forward main fuel LH	1	
	769580-32	TANK ATTACHMENT INSTL, fuel tank liner special stores forward main fuel RH	1	
	764207	STRAP, fuel cell hanger	4	
-28	764206	RING, fuel cell hanger	4	
	769580-33	TANK ATTACHMENT INSTL, fus sta 358 bhd splice special stores forward main fuel *(see fig. 30 for reqd)*	REF	
	764207	STRAP, fuel cell hanger	5	
-29	764206	RING, fuel cell hanger	5	
	790334-1	LINER INSTL, fus sta 416 to 422 forward main fuel tank LH (NHA 849138-101)	1	
	790334-2	LINER INSTL, fus sta 416 to 422 forward main fuel tank RH (NHA 849138-101)	1	
	764509	STRAP, fuel cell hanger	2	
-30	764206	RING, fuel cell hanger	2	
	AN520-10R8	SCREW (88044)	2	
	769580-37	TANK ATTACHMENT INSTL, fus sta 358 special stores forward main fuel *(see fig. 30 for reqd)*	REF	
	764207	STRAP, fuel cell hanger	1	
-31	764206	RING, fuel cell hanger	1	
	851181-101	PAN INSTL, left side forward fuel pump *(see fig. 40 for reqd)*	REF	
	851180-101	PAN INSTL, right side forward fuel pump *(see fig. 40 for reqd)*	REF	
	769580-39	TANK ATTACHMENT INSTL, fus sta 370 special stores forward main fuel LH	1	
	769580-40	TANK ATTACHMENT INSTL, fus sta 370 special stores forward main fuel RH	1	
	764207	STRAP, fuel cell hanger	1	
-32	764206	RING, fuel cell hanger	1	
	851123-101	LACING INSTL, forward main fuel tank (NHA 849138-101)	1	
	851123-103	LACING INSTL, forward main fuel tank floor	1	
-33	764900-10	CORD, forward main fuel tank nylon	2	
-34	764900-13	CORD, forward main fuel tank nylon	2	
	851123-105	LACING INSTL, forward main fuel tank bulkhead 358 forward end	1	
-35	764900-11	CORD, forward main fuel tank nylon	2	
-36	764900-12	CORD, forward main fuel tank nylon	4	
-37	764900-10	CORD, forward main fuel tank nylon	1	
	851123-107	LACING INSTL, forward main fuel tank fus sta 364 to 416 (LH side)	1	
	851123-108	LACING INSTL, forward main fuel tank fus sta 364 to 416 (RH side)	1	
-38	764900-11	CORD, forward main fuel tank nylon	2	
-39	764900-12	CORD, forward main fuel tank nylon	1	
-40	764900-13	CORD, forward main fuel tank nylon	8	
	851123-109	LACING INSTL, forward main fuel tank bulkhead 422 aft end	1	
-41	764900-13	CORD, forward main fuel tank nylon	4	
-42	764900-10	CORD, forward main fuel tank nylon	2	
	851123-111	LACING INSTL, forward main fuel tank longeron	1	
-43	764900-12	CORD, forward main fuel tank nylon	2	
	851123-113	LACING INSTL, forward main fuel tank cover	1	
-44	764900-10	CORD, forward main fuel tank nylon	4	
-45	36943	TANK ASSY, forward main fuel (A0043) (05476) (Lockheed spec dwg 634259-105) *(see fig. 102 for reqd)*	REF	
-46	38540	FERRULE, fuel tank (05476) (Lockheed spec dwg 634259-5)	26	
	764206-1	RING, fuel cell hanger	193	

Figura e particolare	NDR	DENOMINAZIONE	Quant.	Codice applicab.
		LEFT HAND, RIGHT HAND AND CENTER AFT MAIN FUEL TANKS		
105	784388-1	TANK INSTL, main aft fuel (NHA 849140-101) *(see fig. 106)*	1	
-1	36927-1	TANK ASSY, aft main fuel (A0043) (05476) (Lockheed spec dwg 634260-5) *(see fig. 108)*	1	
		Attaching Parts		
-2	AN960D10	WASHER (88044)	28	
-3	AN960-416L	WASHER (88044)	16	
-4	MS21042L3	NUT (96906)	28	
-5	MS21042L4	NUT (96906)	16	
		*		
	38540	FERRULE, fuel tank (05476) (Lockheed spec dwg 634259-5)	31	
	764206-1	RING, fuel cell hanger	40	
-6	MS29513-223	PACKING (96906)	6	
-7	MS29513-236	PACKING (96906)	2	
-8	MS29513-259	PACKING (96906)	2	
-9	11-954-201	VALVE, fuel tank vent float (A0303) (82267) (Lockheed spec dwg 633953-11) (see T.O. 6J15-5-30-3)	2	
		Attaching Parts		
-10	AN960-416L	WASHER (88044)	4	
-11	MS21042L4	NUT (96906)	4	
		*		
-12	MS29512-6	GASKET (96906)	2	
-13	740B7	VALVE, poppet drain (91511) (Lockheed spec dwg 633971-7) (see T.O. 6J15-4-56-3)	2	
-14	779694-1	BRACKET ASSY, aft fuel tank cover stomper	1	
		Attaching Parts		
-15	NAS1103-10	BOLT (80205)	2	
	AN960D10	WASHER (88044)	2	
	MS21042L3	NUT (96906)	2	
		*		
-16	762746	TUBE ASSY, vent interconnect	2	
-17	MS20756D16	FLANGE (96906)	2	
		Attaching Parts		
	AN960D10	WASHER (88044)	4	
-18	MS21042L3	NUT (96906)	4	
		*		
-19	MS29513-215	PACKING (96906)	2	
-20	3605-16D	COUPLING, flexible (79326)	2	
-21	MS29513-214	PACKING (96906)	4	
-22	780727-1	TUBE ASSY, inboard main aft fuel tank interconnect LH	1	
-23	780727-2	TUBE ASSY, inboard main aft fuel tank interconnect RH	1	
-24	778176-1	FLANGE, main aft fuel tank	2	
		Attaching Parts		
	AN960-416L	WASHER (88044)	4	
-25	MS21042L4	NUT (96906)	4	
-26	3605-24D	COUPLING, flexible (79326)	2	
-27	MS29513-325	PACKING (96906)	4	
-28	MS29513-244	PACKING (96906)	1	
		*		
	779105-1	BRACKET INSTL, aft tank interconnect support LH *(see fig. 31 for reqd)*	REF	
	779105-2	BRACKET INSTL, aft tank interconnect support RH *(see fig. 31 for reqd)*	REF	
-29	779077-1	BRACKET ASSY, aft tank interconnect support LH	1	
-30	779077-2	BRACKET ASSY, aft tank interconnect support RH	1	
		Attaching Parts		
-31	NAS623-3-3	SCREW (80205)	7	
	AN960D10	WASHER (88044)	7	
-32	MS21042L3	NUT (96906)	7	
		*		
	774024-501	BRACKET INSTL, fuel tank aft vent LH *(see fig. 31 for reqd)*	REF	
	774024-502	BRACKET INSTL, fuel tank aft vent RH *(see fig. 31 for reqd)*	REF	

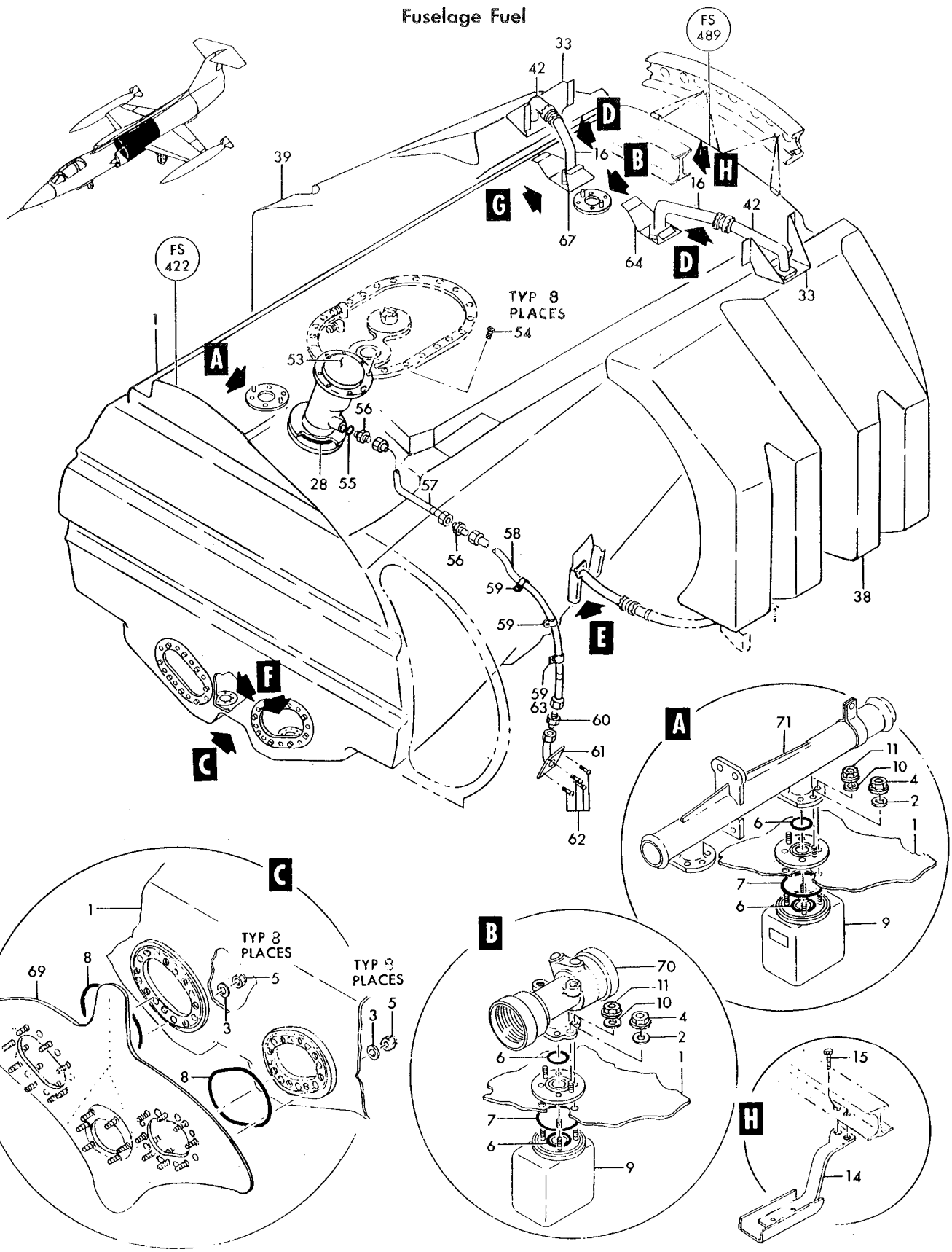

Figure 105—Left Hand, Right Hand and Center Aft Main Fuel Tanks (Sheet 1 of 2)

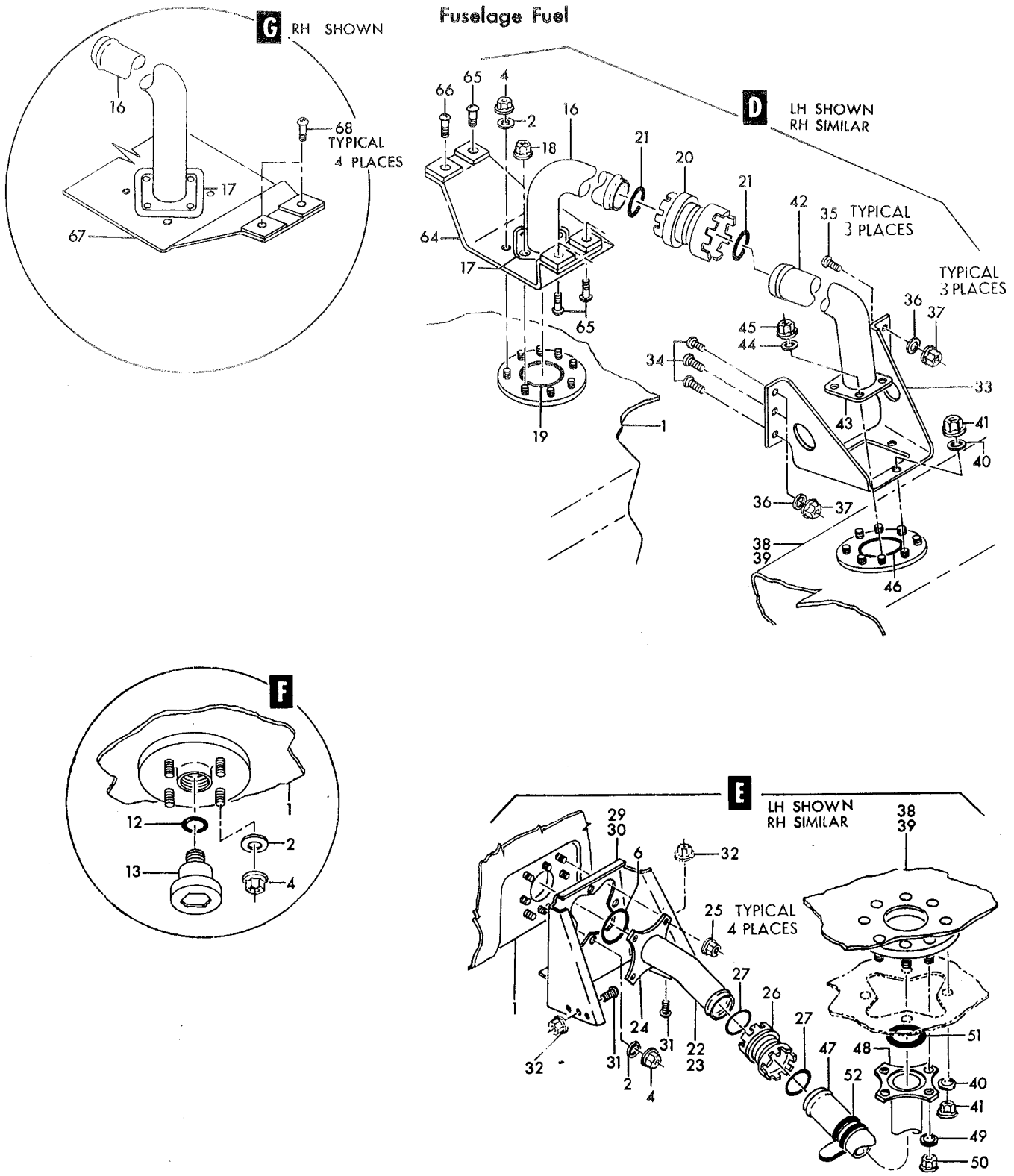

Figure 105—Left Hand, Right Hand and Center Aft Main Fuel Tanks (Sheet 2 of 2)

Figura e particolare	NDR	1 2 3 4 5 6 7 DENOMINAZIONE	Quant.	Codice applicab.
105-33	762132-3	BRACKET, aft fuel tank vent	1	
		Attaching Parts		
-34	NAS623-3-9	SCREW (80205)	3	
-35	NAS623-3-11	SCREW (80205)	3	
-36	AN960-10L	WASHER (88044)	6	
-37	MS21042L3	NUT (96906)	6	
		*		
	774024-503	TANK INSTL, LH aft main fuel (NHA 849140-101)	1	
	774024-504	TANK INSTL, RH aft main fuel (NHA 849140-101)	1	
-38	36916-5	TANK ASSY, aft main fuel LH (A0043) (05476) (Lockheed spec dwg 634206-11) *(see fig. 107)*	1	
-39	36916-6	TANK ASSY, aft main fuel RH (A0043) (05476) (Lockheed spec dwg 634206-12) *(see fig. 107)*	1	
		Attaching Parts		
-40	AN960-10L	WASHER (88044)	8	
-41	MS21042L3	NUT (96906)	8	
		*		
-42	762745	TUBE ASSY, aft main fuel tank vent	1	
-43	MS20756D16	FLANGE (96906)	1	
		Attaching Parts		
-44	AN960-416L	WASHER (88044)	4	
-45	MS21042L4	NUT (96906)	4	
		*		
-46	MS29513-215	PACKING (96906)	1	
-47	778173-1	TUBE ASSY, aft main tank interconnect	1	
-48	778176-1	FLANGE, main aft fuel interconnect	1	
		Attaching Parts		
-49	AN960-416L	WASHER (88044)	4	
-50	MS21042L4	NUT (96906)	4	
		*		
-51	MS29513-223	PACKING (96906)	1	
-52	TA4C74D24T	CLAMP, loop type (84971)	1	
	AN520-10R8	SCREW (88044)	1	
	AN960D10	WASHER (88044)	1	
	766165-507	FILLER INSTL, main fuel tank adapter and drain (NHA 849140-101)	1	
-53	FV400-19-3	CAP, fuselage flush type 3 fuel tank filler (98817) (Lockheed spec dwg 633972-11) (see T.O. 6J18-2-2-23)	1	
		Attaching Parts		
-54	NAS517-3-3	SCREW (80205)	8	
		*		
-55	MS29512-8	GASKET (96906)	1	
-56	AN815-8D	UNION (88044)	2	
-57	785201-51	TUBE ASSY, fuel tank filler overflow drain	1	
	766165-103	TUBE INSTL, main fuel tank adapter and drain (LH only) *(see fig. 31 for reqd)*	REF	
-58	762788-69	TUBE ASSY, fuel tank filler overflow drain	1	
-59	MS21919DG8	CLAMP (96906)	3	
		Attaching Parts		
	AN520-10R8	SCREW (88044)	1	
	MS21042L3	NUT (96906)	1	
		*		
-60	AN815-8D	UNION (88044)	1	
-61	850394-101	OUTLET ASSY, fuel tank filler drain	1	
		Attaching Parts		
-62	AN507-1032R8	SCREW (88044)	4	
-63	TA102-2-14-6	BRACKET (84971)	1	
		*		
	782945-3	FRAME INSTL, fus sta 457 to 520 *(see fig. 31 for reqd)*	REF	
	774023-3	BRACKET INSTL, main aft fuel tank	1	
-64	762744L	BRACKET ASSY, main aft fuel tank LH	1	

Figura e particolare	NDR	1 2 3 4 5 6 7 DENOMINAZIONE	Quant.	Codice applicab.
		Attaching Parts		
105-65	NAS623-3-8	SCREW (80205)	3	
-66	NAS623-3-16	SCREW (80205)	1	
	AN960D10	WASHER (88044)	4	
	MS21042L3	NUT (96906)	4	
-67	774114-1	BRACKET ASSY, main aft fuel tank vent RH	1	
		Attaching Parts		
-68	NAS623-3-8	SCREW (80205)	4	
	AN960D10	WASHER (88044)	4	
	MS21042L3	NUT (96906)	4	
-69	770870-1	WEB ASSY, fuselage station 422 fuel tank seal (LH only) *(see fig. 40 for reqd)*	REF	
-70	763235	TEE, float valve vent line *(see fig. 110 for reqd)*	REF	
-71	772066-1	MANIFOLD ASSY, vent line valve support *(see fig. 110 for reqd)*	REF	

Figura e particolare	NDR	DENOMINAZIONE 1 2 3 4 5 6 7	Quant.	Codice applicab.
		CENTER AFT MAIN FUEL TANK COVER AND EQUIPMENT		
106	784388-1	. TANK INSTL, main aft fuel *(see fig. 105 for reqd)*	REF	
- 1	774029-1	. . COVER ASSY, aft fuel manhole *(see fig. 110)*	1	
		Attaching Parts		
	AN960-416L	. . WASHER (88044)	20	
	MS21042L4	. . NUT (96906)	20	
		——————☼——————		
- 2	774152-95	. . . TUBE ASSY, fuel bleed	1	
- 3	774152-97	. . . TUBE ASSY, fuel bleed	1	
- 4	8-557-1	. . . VALVE, 2 inch pressure fueling level control (82267) (Lockheed spec dwg 634180-1) (see T.O. 6J15-10-138-3)	1	
		Attaching Parts		
- 5	AN4-6A	. . . BOLT (88044)	4	
- 6	AN960-416L	. . . WASHER (88044)	4	
- 7	MS21042L4	. . . NUT (96906)	4	
		——————☼——————		
- 8	MS29513-228	. . . PACKING (96906)	2	
- 9	780492-1	. . . SPACER ASSY, aft main fuel tank fuel shutoff valve	1	
		Attaching Parts		
-10	AN960-416L	. . . WASHER (88044)	4	
-11	MS21042L4	. . . NUT (96906)	4	
		——————☼——————		
-12	774318-1	. . . COVER ASSY, aft fuel tank manhole	1	
-13	LCR8	. . . . COLLAR, tension (29666)	14	
-14	R1014C	. . . . STUD, lockbolt (29666)	14	
-15	AN833-6D	. . . ELBOW (88044)	3	
-16	AN837-6D	. . . ELBOW (88044)	1	
-17	AN924-6D	. . . NUT (88044)	4	
-18	MS29512-6	. . . GASKET (96906)	4	
-19	SRP119	. . GASKET, fuel tank manhole cover (17991) (Lockheed spec dwg 750418-3) (alternate to SRCBZ127C and 026861)	1	
	SRC-BZ1270	. . GASKET, fuel tank manhole cover (95272) (Lockheed spec dwg 750418-3) (alternate to SRP119 and 026861)	REF	
	026861	. . GASKET, fuel tank manhole cover (83259) (Lockheed spec dwg 750418-3) (alternate to SRP119 and SRCBZ127C)	REF	
-20	FG200A3	. . TRANSMITTER, (TR11) fuel liquid quantity (A0019) (94580) (Lockheed spec dwg 624290) (see T.O. 5L14-3-21-23)	1	
		Attaching Parts		
	AN960-416L	. . WASHER (88044)	6	
	MS21042L4	. . NUT (96906)	6	
		——————☼——————		
-21	MS29513-231	. . PACKING (96906)	1	
-22	774152-67	. TUBE ASSY, fuel bleed *(see fig. 110 for reqd)*	REF	
-23	774152-69	. TUBE ASSY, fuel bleed *(see fig. 110 for reqd)*	REF	
-24	774266-1	. MANIFOLD ASSY, aft main fuel tank cover *(see fig. 110 for reqd)*	REF	
	849585-101	. HARNESS ASSY, aft quantity transmitter probe to fuel cell splice *(see fig. 193 for reqd)*	REF	
-25	1-672-1	. . CONNECTOR, (P95) plug (aft fuel cell quantity transmitter probe) (95712)	1	
-26	1-690-1	. . CONNECTOR, (P94) plug (aft fuel cell quantity transmitter probe) (95712)	1	

Fuselage Fuel

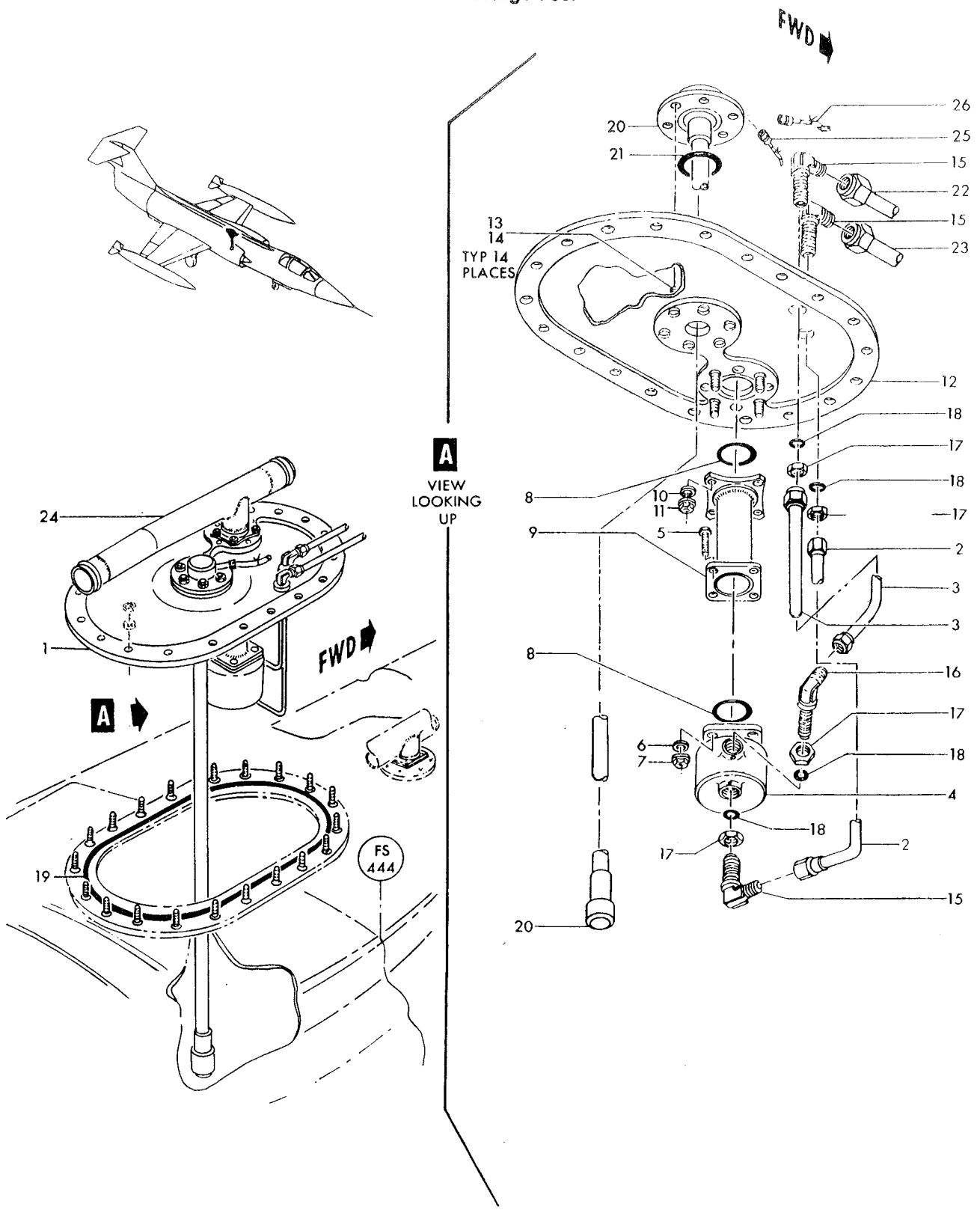

Figure 106—Center Aft Main Fuel Tank Cover and Equipment

Figura e particolare	NDR	DENOMINAZIONE 1 2 3 4 5 6 7	Quant.	Codice applicab.
		LEFT HAND AND RIGHT HAND AFT MAIN FUEL TANK ATTACHMENTS		
107	797362-1	. LINER INSTL, aft main fuel tank LH *(see fig. 31 for reqd)*	REF	
	797362-2	. LINER INSTL, aft main fuel tank RH *(see fig. 31 for reqd)*	REF	
	785823-1	. . BULKHEAD ASSY, aft main fuel tank liner LH	1	
	785823-2	. . BULKHEAD ASSY, aft main fuel tank liner RH	1	
	774206-501	. . . LACING ATTACHMENT INSTL, aft main fuel tank LH	1	
	774206-502	. . . LACING ATTACHMENT INSTL, aft main fuel tank RH	1	
- 1	764206	. . . . RING, fuel cell hanger	4	
	764207	. . . . STRAP, fuel cell hanger	3	
	764509	. . . . STRAP, fuel cell hanger	1	
	774206-507	. LACING ATTACHMENT INSTL, aft main fuel tank liners LH (NHA 849140-101)	1	
	774206-508	. LACING ATTACHMENT INSTL, aft main fuel tank liners RH (NHA 849140-101)	1	
- 3	774206-13	. . CORD	1	
- 4	774206-15	. . CORD	1	
- 5	774206-17	. . CORD	1	
	774206-3	. LACING ATTACHMENT INSTL, aft main fuel tank structure LH *(see fig. 31 for reqd)*	REF	
	774206-4	. LACING ATTACHMENT INSTL, aft main fuel tank structure RH *(see fig. 31 for reqd)*	REF	
- 6	764206	. . RING, fuel cell hanger	12	
	764207	. . STRAP, fuel cell hanger	12	
- 7	774206-19	. . CORD	1	
- 8	774206-21	. . CORD	1	
- 9	774206-23	. . CORD	1	
-10	774206-25	. . CORD	1	
-11	774206-27	. . CORD	1	
-12	774206-29	. . CORD	1	
-13	774206-31	. . CORD	1	
-14	GF61-2-250CN	. . GROMMET, dzus (72794)	4	
	783226-1	. LONGERON INSTL, fus sta 444 to 614 side panel LH *(see fig. 31 for reqd)*	REF	
	783226-3	. LONGERON INSTL, fus sta 444 to 614 side panel RH *(see fig. 31 for reqd)*	REF	
	783226-11	. . LONGERON ASSY, fus sta 444 to 614 upper LH	1	
	783226-12	. . LONGERON ASSY, fus sta 444 to 614 upper RH	1	
	774206-505	. . . LACING ATTACHMENT INSTL, aft main fuel tank longeron LH	1	
	774206-12	. . . LACING ATTACHMENT INSTL, aft main fuel tank longeron RH	1	
-15	764206	. . . . RING, fuel cell hanger	2	
	764207	. . . . STRAP, fuel cell hanger	2	
-15A	764206	. . . . RING, fuel cell hanger (only RH)	1	
	764207	. . . . STRAP, fuel cell hanger (only RH)	1	
	788728-1	. . . . STRAP, fuel cell hanger (only LH)	1	
	774206-7	. . LACING ATTACHMENT INSTL, aft main fuel tank longeron LH	1	
	774206-8	. . LACING ATTACHMENT INSTL, aft main fuel tank longeron RH	1	
-16	764206	. . . RING, fuel cell hanger	1	
	764207	. . . STRAP, fuel cell hanger	1	
	774206-9	. LACING ATTACHMENT INSTL, aft main fuel tank LH *(see fig. 41 for reqd)*	REF	
	774206-10	. LACING ATTACHMENT INSTL, aft main fuel tank RH *(see fig. 41 for reqd)*	REF	
-17	764206	. . RING, fuel cell hanger	8	
	764207	. . STRAP, fuel cell hanger	8	
-18	36916-5	. TANK ASSY, aft main fuel LH (A0043) (05476) (Lockheed spec dwg 634206-11) *(see fig. 105 for reqd)*	REF	
-19	36916-6	. TANK ASSY, aft main fuel RH (A0043) (05476) (Lockheed spec dwg 634206-12) *(see fig. 105 for reqd)*	REF	
-20	38540	. . FERRULE, fuel tank (05476) (Lockheed spec dwg 634259-5)	6	
	764206-1	. . RING, fuel cell hanger	23	

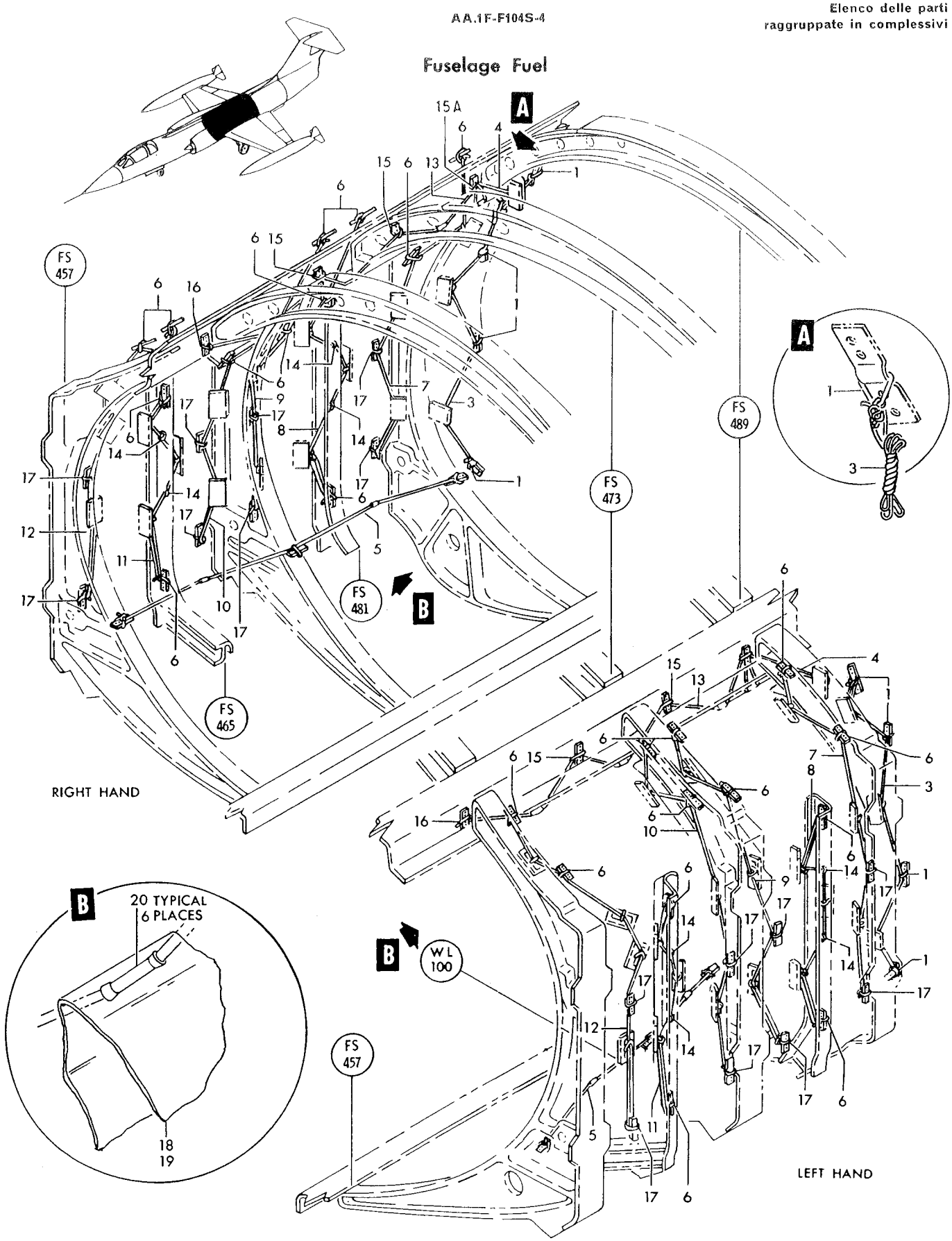

Figure 107—Left Hand and Right Hand Aft Main Fuel Tank Attachments

Figura e particolare	NDR	DENOMINAZIONE 1 2 3 4 5 6 7	Quant.	Codice applicab.
		CENTER AFT MAIN FUEL TANK ATTACHMENTS		
108	764361-3	TANK ATTACHMENT INSTL, main aft fuel LH *(see fig. 31 for reqd)*	REF	
-1	764206	RING, fuel cell hanger	10	
	764207	STRAP, fuel cell hanger	10	
-2	GF5-175CN	GROMMET, dzus (72794)	2	
	764361-4	TANK ATTACHMENT INSTL, main aft fuel RH *(see fig. 31 for reqd)*	REF	
-3	764206	RING, fuel cell hanger	11	
	764207	STRAP, fuel cell hanger	10	
	764509	STRAP, fuel cell hanger	1	
-4	GF5-175CN	GROMMET, dzus (72794)	2	
	764361-5	TANK ATTACHMENT INSTL, main fuel upper *(see fig. 60 for reqd)*	REF	
-5	764206	RING, fuel cell hanger	9	
	764207	STRAP, fuel cell hanger	9	
	764361-6	TANK ATTACHMENT INSTL main aft fuel fus sta 489 *(see fig. 31 for reqd)*	REF	
-6	764206	RING, fuel cell hanger	2	
	764509	STRAP, fuel cell hanger	2	
	764361-7	TANK ATTACHMENT INSTL, main aft fuel LH starter housing *(see fig. 51 for reqd)*	REF	
-7	764206	RING, fuel cell hanger	1	
	764207	STRAP, fuel cell hanger	1	
	764361-8	TANK ATTACHMENT INSTL, main aft fuel RH starter housing *(see fig. 51 for reqd)*	REF	
-8	764206	RING, fuel cell hanger	1	
	764207	STRAP, fuel cell hanger	1	
	783412-103	LONGERON ASSY, fus sta 358 to 444 upper LH *(see fig. 40 for reqd)*	REF	
	764361-9	TANK ATTACHMENT INSTL, main aft fuel LH longeron	1	
-9	764206	RING, fuel cell hanger	2	
	764509	STRAP, fuel cell hanger	2	
	783412-104	LONGERON ASSY fus sta 358 to 444 upper RH *(see fig. 40 for reqd)*	REF	
	764361-10	TANK ATTACHMENT INSTL, main aft fuel RH longeron	1	
-10	764206	RING, fuel cell hanger	1	
	764509	STRAP, fuel cell hanger	1	
	764361-11	TANK ATTACHMENT INSTL, main aft fuel LH *(see fig. 40 for reqd)*	REF	
-11	764206	RING, fuel cell hanger	2	
	764207	STRAP, fuel cell hanger	1	
	764509	STRAP, fuel cell hanger	1	
	764361-12	TANK ATTACHMENT INSTL, main aft fuel RH *(see fig. 40 for reqd)*	REF	
-12	764206	RING, fuel cell hanger	2	
	764207	STRAP, fuel cell hanger	1	
	764509	STRAP, fuel cell hanger	1	
	764954	LACING ATTACHMENT INSTL, aft main fuel tank (NHA 849140-101)	1	
	764954-3	LACING INSTL, aft main fuel tank floor	1	
-13	764954-10	CORD	2	
	764954-4	LACING INSTL, aft main fuel tank aft end starter housing	1	
-14	764954-8	CORD	2	
	764954-5	LACING INSTL, aft main fuel tank fwd end bhd 422	1	
-15	764954-9	CORD	2	
-16	764954-11	CORD	2	
	764954-6	LACING INSTL, aft main fuel tank longeron	1	
-17	764954-12	CORD	2	
	764954-7	LACING INSTL, aft main fuel tank cover	1	
-18	764954-8	CORD	2	
-19	764954-9	CORD	1	
-20	36927-1	TANK ASSY, aft main fuel (A0043) (05476) (Lockheed spec dwg 634260-5) *(see fig. 105 for reqd)*	REF	
-21	38540	FERRULE, fuel tank (05476) (Lockheed spec dwg 634259-5)	31	
	764206-1	RING, fuel cell hanger	40	
	797375-1	PAN ASSY, aft fuel cell tie-down (NHA 774226-9) (NHA 774226-10)	2	
	797375-3	PAN ASSY, aft fuel cell tie-down (NHA 774226-9) (NHA 774226-10)	1	
	764206-1	RING, fuel cell hanger	1	

Fuselage Fuel

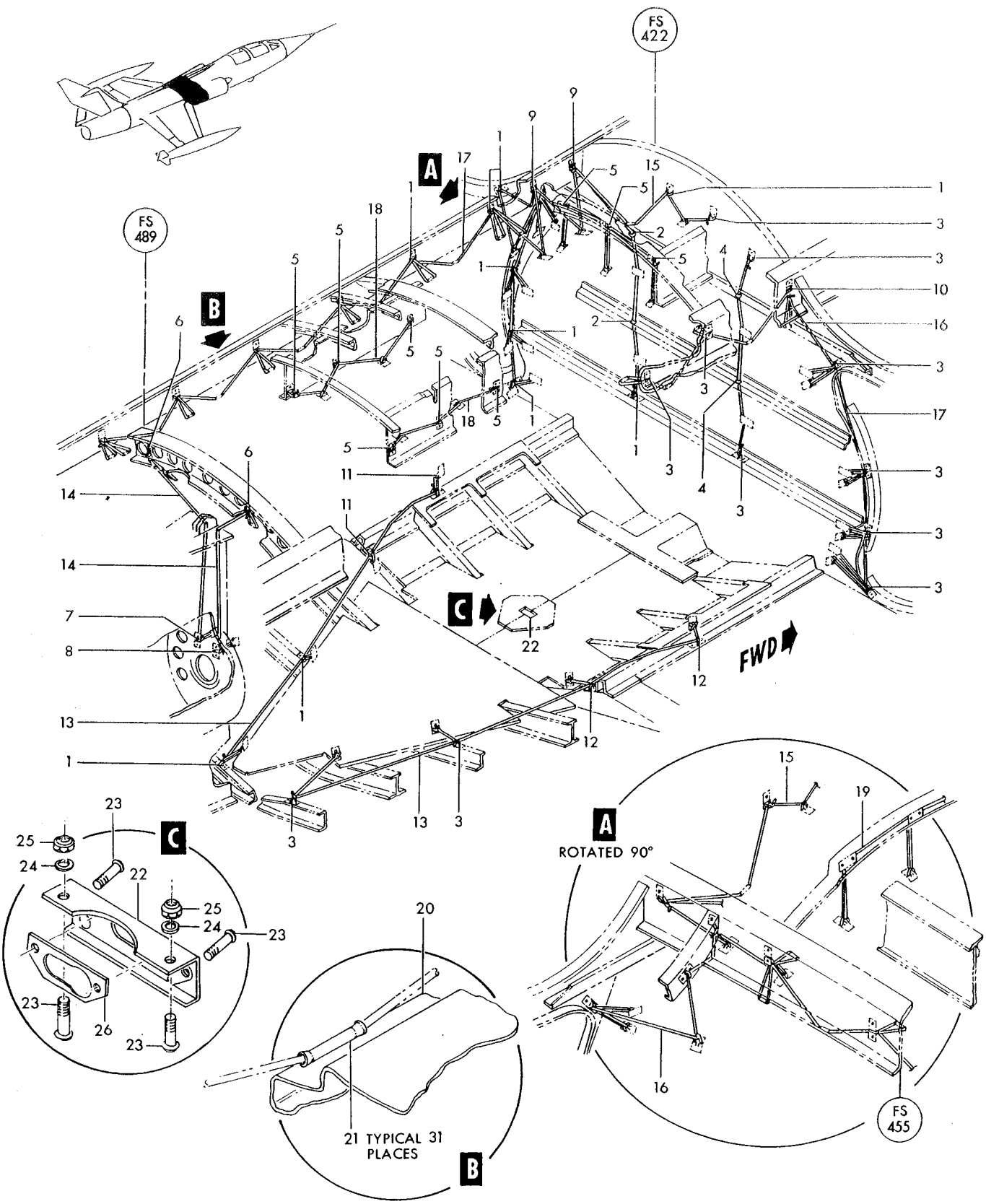

Figure 108—Center Aft Main Fuel Tank Attachments

Figura e particolare	NDR	DENOMINAZIONE	Quant.	Codice applicab.
108	765211-1	FLOOR INSTL, aft fuel tank (NHA 849138-101)	1	
-22	764538-501	RETAINER ASSY, fus sta 444 main aft fuel cell lower	1	
		Attaching Parts		
-23	NAS221-8	SCREW (80205)	4	
-24	AN960D10	WASHER (88044)	2	
-25	AN364-1032C	NUT (88044)	2	
-26	786969-1	SPACER, fus sta 444 main aft fuel cell lower retainer	1	

Figura e particolare	NDR	1 2 3 4 5 6 7 DENOMINAZIONE	Quant.	Codice applicab.
		FUEL TANKS EXTERNAL PIPING FUSELAGE STATION 358 TO 422		
109- 1	778344-1	. TUBE ASSY, ammunition compartment tank fuel transfer *(see fig. 97 for reqd)*	REF	
- 2	785201-33	. TUBE ASSY, fuel vent *(see fig. 97 for reqd)*	REF	
- 3	751059-1	. ELBOW ASSY, auxiliary tank *(see fig. 100 for reqd)*	REF	
- 4	787220-1	. TEE ASSY, auxiliary tank vent line *(see fig. 100 for reqd)*	REF	
	783532-3	A. PLUMBING INSTL, forward fuel tank (NHA 849138-101)	1	
	783532-101	. PLUMBING INSTL, forward fuel tank (NHA 849138-101)	1	
- 5	774152-73	. . TUBE ASSY, fuel transfer *(see fig. 102)*	1	
- 6	775479-1	. . TEE ASSY, vent line *(see fig. 100 and 102)*	1	
		Attaching Parts		
	NAS623-4-8	. . SCREW (80205)	4	
	AN960D416	. . WASHER (88044)	4	
- 7	3655-32D	. . COUPLING, half (79326)	1	
- 8	774340-1	. . TUBE ASSY, fuel tank vent	1	
- 9	3655-40D	. . COUPLING, half (79326)	1	
-10	MS29513-333	. . PACKING (96906)	1	
-11	778345-1	. . MANIFOLD ASSY, air refueling and fuel transfer *(see fig. 96 and 100)*	1	
		Attaching Parts		
-12	AN4-4A	. . BOLT (88044)	4	
	AN960D416	. . WASHER (88044)	4	
-13	MS29513-325	A. . PACKING (96906)	1	
-14	3630-24D1	A. . CAP (79326)	1	
-15	3655-24D	A. . COUPLING (79326)	1	
-16	MS29513-224	. . PACKING (96906)	1	
-17	3605-32D	. . COUPLING ASSY, flexible (79326)	6	
-18	MS29513-329	. . PACKING (96906)	13	
-19	774406-1	. . TUBE ASSY refueling	1	
-20	LS4605-2-32	. . CLAMP, bonding (36659)	3	
-20A	AN735D32	. . CLAMP (88044)	2	
-20B	MS25083-1BC3	. . JUMPER (96906)	2	
		Attaching Parts		
	AN520-10R8	. . SCREW (88044)	1	
	MS21042L3	. . NUT (96906)	1	
-21	MS29513-229	. . PACKING (96906)	1	
-22	40C675	. . VALVE ASSY, safety relief (A0303) (79294) (Lockheed spec dwg 634201-1) (see T.O. 6J15-8-115-3)	1	
		Attaching Parts		
-23	AN507-1032R14	. . SCREW (88044)	4	
-24	AN507-1032R12	. . SCREW (88044)	2	
-25	MS21042L3	. . NUT (96906)	2	
-26	779274-27	. . TUBE ASSY, fuel vent	1	
-27	774265-1	. . TUBE ASSY, refuel	1	
-28	774405-1	. . TUBE ASSY, refueling *(see fig. 110)*	1	
-29	767577-89	. . TUBE ASSY, fuel vent	1	
-30	779274-39	. . TUBE ASSY, fuel bleed *(see fig. 102)*	1	
-31	779274-37	. . TUBE ASSY, fuel bleed *(see fig. 102)*	1	
-32	774152-63	. . TUBE ASSY, fuel bleed *(see fig. 110)*	1	
-33	779274-35	. . TUBE ASSY, fuel bleed *(see fig. 110)*	1	
-34	AN815-6D	. . UNION (88044)	2	
-35	TA4C74D32T	. . CLAMP, loop type (84971)	3	
-36	TA4C68D32P	. . CLAMP, phenolic insert (84971)	1	
		Attaching Parts		
-37	NAS623-3-3	. . SCREW (80205)	2	
	LS881-2	. . WASHER, plain aluminum (36659)	2	
	MS21042L3	. . NUT (96906)	2	

Fuselage Fuel

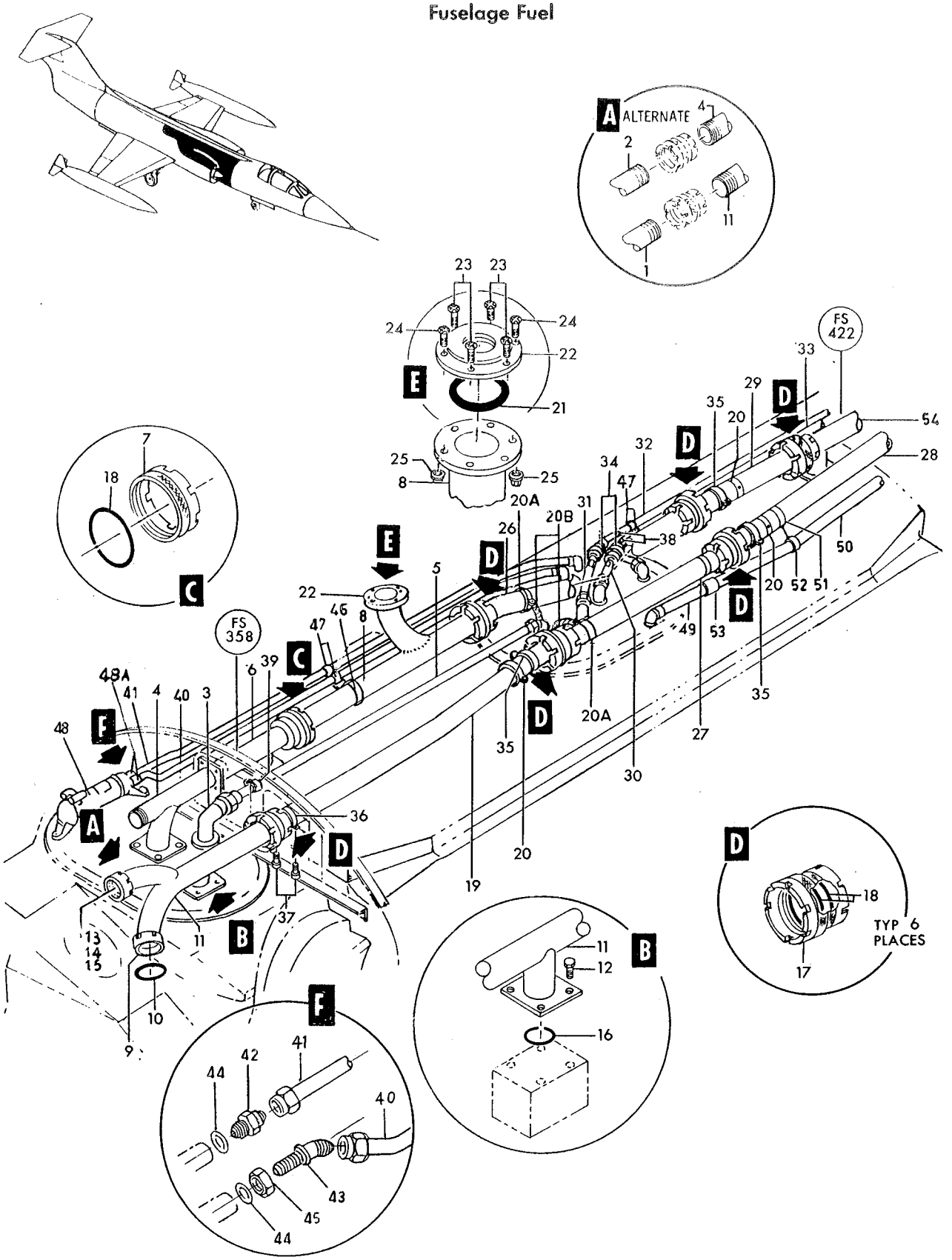

Figure 109—Fuel Tanks External Piping Fuselage Station 358 to 422

Figura e particolare	NDR	1 2 3 4 5 6 7	DENOMINAZIONE	Quant.	Codice applicab.
109-38	TA4C74D6T	. .	CLAMP (84971)	2	
-39	TA4C74D12T	. .	CLAMP (84971)	1	
-40	767577-123	. .	TUBE ASSY, pressure	1	
-41	767577-125	. .	TUBE ASSY, fuel return	1	
-42	AN815-6D	B. .	UNION (88044)	1	
-43	AN837-6D	B. .	ELBOW (88044)	1	
-44	MS29512-06	B. .	PACKING (96906)	2	
-45	AN924-6D	B. .	NUT (88044)	1	
-46	TA4C74D32T	. .	CLAMP, loop type (84971)	1	
-47	TA4C74D6T	. .	CLAMP (84971)	4	
			Attaching Parts		
	NAS603-10	. .	SCREW (80205)	2	
	NAS603-12	. .	SCREW (80205)	1	
	AN960D10	. .	WASHER (88044)	3	
	MS21042L3	. .	NUT (96906)	3	
-48	107151A1	B. .	HEAT EXCHANGER (A1615) (Alternate to 259776) (see AA11-128577A1-4) (Lockheed spec dwg 740394-101) *(see fig. 155A)*	1	
	259776	B. .	HEAT EXCHANGER (49956) (Lockheed spec dwg 740394-101) (see separate publication when available) (Alternate to 107151A1) *(see fig. 155A)*	REF	
-48A	AN806D6	A. .	PLUG (88044)	2	
	850961-101	.	PLUMBING INSTL, heat exchanger fuel line (NHA 849140-101) *(see fig. 110)*	1	
-49	851084-111	. .	TUBE ASSY, fuel bleed *(see fig. 102)*	1	
-50	851084-101	. .	TUBE ASSY, fuel bleed *(see fig. 110)*	1	
-51	LS7357DT32	. .	CLAMP (36659)	1	
-52	LS7357DT8	. .	CLAMP (36659)	1	
-53	AN815-10D	. .	UNION (88044)	1	
-54	772066-1	.	MANIFOLD ASSY, aft main fuel tank cover *(see fig. 110 for reqd)*	REF	

A - Only for FB
B - Only for AWX

Figura e particolare	NDR	1 2 3 4 5 6 7 DENOMINAZIONE	Quant.	Codice applicab.
		FUEL TANKS EXTERNAL PIPING FUSELAGE STATION 422 TO 489		
110	783532-1	. PLUMBING INSTL, above main fuel tank (NHA 849140-101)	1	
- 1	772079-1	. . SUPPORT, manifold	1	
- 2	AN3-5A	. . BOLT (88044)	3	
- 3	AN960D10	. . WASHER (88044)	3	
- 4	MS21042L3	. . NUT (96906)	3	
- 5	772066-1	. . MANIFOLD ASSY, vent line valve support *(see fig. 102, 105 and 109)*	1	
		Attaching Parts		
- 6	AN4-6A	. . BOLT (88044)	4	
	AN960D416	. . WASHER (88044)	4	
- 7	MS21042L4	. . NUT (96906)	4	
- 8	767577-91	. . TUBE ASSY, fuel tank vent	1	
- 9	762788-15	. . TUBE ASSY, fuel tank vent	1	
-10	763235	. . TEE, float valve vent line *(see fig. 105)*	1	
		Attaching Parts		
-11	NAS623-3-16	. . SCREW (80205)	2	
	AN960D10	. . WASHER (88044)	2	
	MS21042L3	. . NUT (96906)	2	
-12	767577-93	. . TUBE ASSY, fuel tank vent	1	
-13	774266-1	. . MANIFOLD ASSY, aft main fuel tank cover *(see fig. 106)*	1	
		Attaching Parts		
	AN960D416	. . WASHER (88044)	4	
-14	MS21042L4	. . NUT (96906)	4	
-15	MS29513-228	. . PACKING (96906)	1	
-16	778350-1	. . TUBE ASSY, refueling	1	
-17	778349-1	. . TUBE ASSY, fuel transfer	1	
-18	774482-1	. . TUBE ASSY, fuselage tip tank refuel *(see fig. 111)*	1	
-19	3605-32D	. . COUPLING, flexible (79326)	4	
-20	3655-32D	. . COUPLING, half (79326)	3	
-21	MS29513-329	. . PACKING (96906)	11	
-22	4050-3	. . VALVE ASSY, (L16) solenoid fuel shutoff (99643) (Lockheed spec dwg 634135-5 *(see T.O. 6J15-10-168-3)*	4	
		Attaching Parts		
-23	AN4H5A	. . BOLT (88044)	4	
-23A	AN4H6A	. . BOLT (88044)	4	
-24	MS29513-223	. . PACKING (96906)	8	
-25	AN833-6D	. . ELBOW (88044)	2	
-26	AN924-6D	. . NUT (88044)	2	
-27	MS29512-6	. . GASKET (96906)	2	
-28	767577-115	. . TUBE ASSY, sensing air *(see fig. 113)*	1	
-29	774152-99	. . TUBE ASSY, air pressure *(see fig. 113)*	1	
-30	774152-67	. . TUBE ASSY, fuel bleed *(see fig. 106)*	1	
-31	774152-69	. . TUBE ASSY, fuel bleed *(see fig. 106)*	1	
-32	AN815-6D	. . UNION (88044)	2	
-33	3655-24D	. . COUPLING, half (79326)	1	
-34	MS29513-325	. . PACKING (96906)	1	
-35	TA4C74D6T	. . CLAMP, loop type (84971)	2	
		Attaching Parts		
	AN520-10R16	. . SCREW (88044)	1	
	AN960D10	. . WASHER (88044)	1	
	NAS43DD3-28	. . SPACER (80205)	1	
	MS21042L3	. . NUT (96906)	1	
-36	TA4C68D32P	. . CLAMP, phenolic insert (84971)	2	
		Attaching Parts		
	NAS623-3-6	. . SCREW (80205)	2	

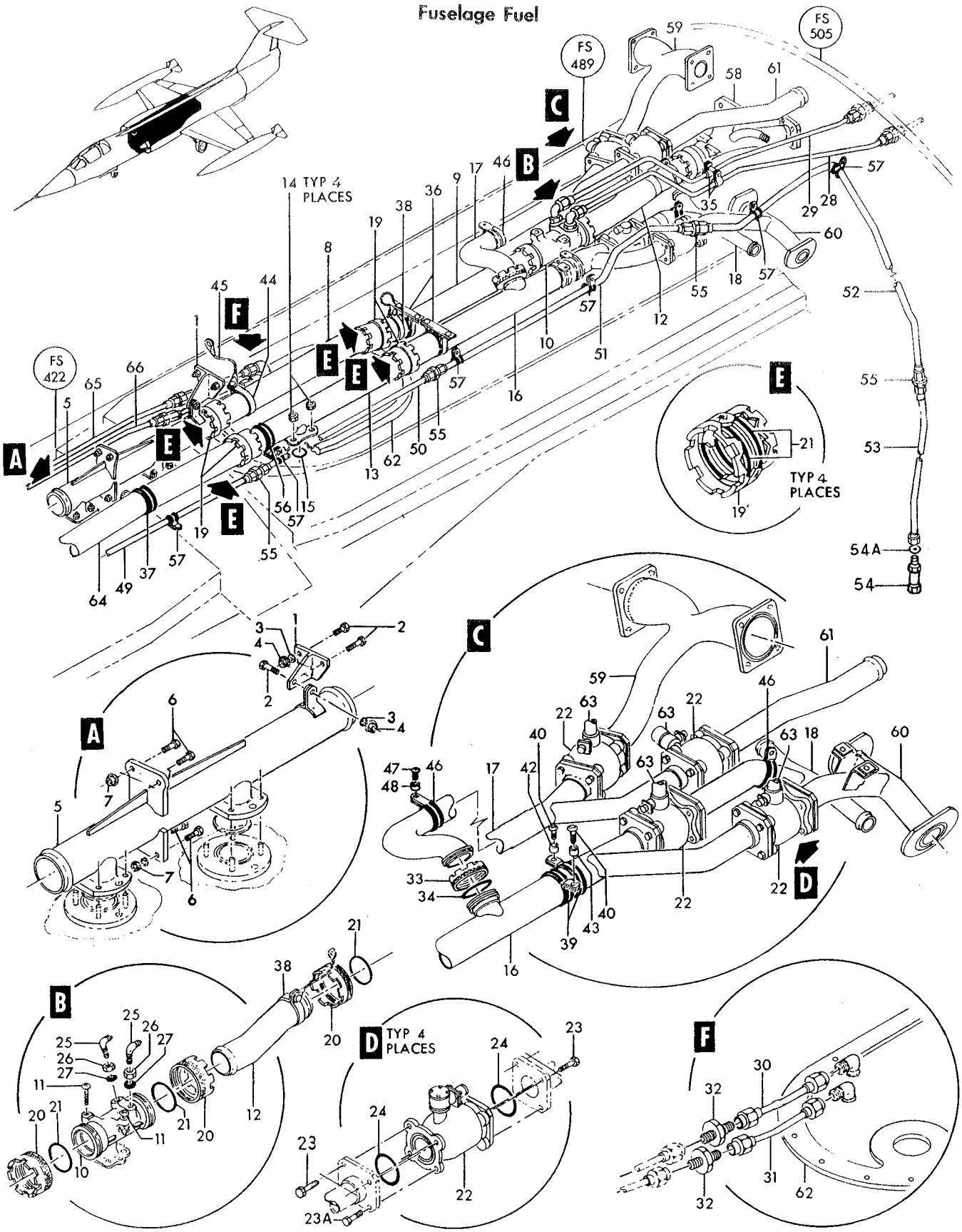

Figure 110— Fuel Tanks External Piping Fuselage Station 422 to 489

Figura e particolare	NDR	DENOMINAZIONE 1 2 3 4 5 6 7	Quant.	Codice applicab.
110	AN960D10	WASHER (88044)	2	
	MS21042L3	NUT (96906)	2	
		☼		
-37	747-32	CLAMP (83930)	1	
-38	LS4605-2-32	CLAMP, bonding (36659)	2	
-39	TA4C74D32T	CLAMP, loop type (84971)	2	
		Attaching Parts		
-40	NAS623-3-16	SCREW (80205)	1	
	AN960D10	WASHER (88044)	1	
-42	NAS43DD3-34	SPACER (80205)	1	
-43	NAS43DD3-22	SPACER (80205)	1	
	MS21042L3	NUT (96906)	1	
		☼		
-44	AN742D32	CLAMP (88044)	1	
		Attaching Parts		
	AN520-10R10	SCREW (88044)	1	
	AN960D10	WASHER (88044)	1	
	MS21042L3	NUT (96906)	1	
		☼		
-45	MS25083-1BB5	JUMPER (96906)	1	
-46	TA4C74D24T	CLAMP, loop type (84971)	2	
		Attaching Parts		
-47	NAS623-3-12	SCREW (80205)	1	
	AN520-10R10	SCREW (88044)	1	
	AN960D10	WASHER (88044)	1	
-48	NAS43DD3-24	SPACER (80205)	1	
	MS21042L3	NUT (96906)	1	
		☼		
	850961-101	PLUMBING INSTL, heat exchanger fuel line *(see fig. 109 for reqd)*	REF	
-49	851084-101	TUBE ASSY, fuel bleed *(see fig. 109 for reqd)*	REF	
-50	851084-103	TUBE ASSY, fuel bleed	1	
-51	851084-105	TUBE ASSY, fuel bleed	1	
-52	851084-107	TUBE ASSY, fuel bleed	1	
-53	851084-121	TUBE ASSY, heat exchanger to fuel tank fuel bleed *(see fig. 112)*	1	
-54	10C117	VALVE, check (82829) (Lockheed spec dwg 671419-101) (see separate publication when available)	1	
-54A	MS29512-10	PACKING (96906)	1	
-55	AN815-10D	UNION (88044)	4	
-56	LS7357DT32	CLAMP, loop type (36659)	1	
-57	LS7357DT10	CLAMP, loop type (36659)	6	
-58	772559-1	FITTING ASSY, fuel vent line Y *(see fig. 111 for reqd)*	REF	
-59	774242-101	FITTING ASSY, fuselage pylon tank fuel transfer *(see fig. 111 for reqd)*	REF	
-60	774243-1	FITTING ASSY fuselage pylon tank refuel *(see fig. 111 for reqd)*	REF	
-61	774420-1	TUBE ASSY, tip tank fuel *(see fig. 111 for reqd)*	REF	
-62	774029-1	COVER ASSY, aft fuel tank manhole *(see fig. 106)*	REF	
	849596-101	HARNESS ASSY, fuel valves to bhd 335 splice *(see fig. 193 for reqd)*	REF	
-63	CA3106ER10SL4S	CONNECTOR, (P6) plug (fuel shutoff valves) (71468)	4	
-64	774405-1	TUBE ASSY, refueling *(see fig. 109 for reqd)*	REF	
-65	774152-63	TUBE ASSY, fuel bleed *(see fig. 109 for reqd)*	REF	
-66	779274-35	TUBE ASSY, fuel bleed *(see fig. 109 for reqd)*	REF	

Figura e particolare	NDR	DENOMINAZIONE 1 2 3 4 5 6 7	Quant.	Codice applicab.
		FUEL TRANSFER PIPING FUSELAGE STATION 489 TO 505		
111	784393-103	. PLUMBING INSTL, mid fus fuel (NHA 849140-101)	1	6701-6815
	784393-107	. PLUMBING INSTL, mid fus fuel (NHA 849140-101)	1	6816-
- 1	MS21042L4	. . NUT (96906)	16	
- 2	AN960D416	. . WASHER (88044)	16	
- 3	AN4-12A	. . BOLT (88044)	16	
- 4	774243-1	. . FITTING ASSY, fus pylon tank refuel *(see fig. 110)*	1	
- 5	TA4C68D24P	. . CLAMP, phenolic insert (84971)	1	
- 6	777065-1	. . BRACKET ASSY, fus sta 489 Y fitting pylon fuel transfer	1	
- 7	774242-101	. . FITTING ASSY, fus y pylon tank fuel transfer *(see fig. 110)*	1	
- 8	315100	. . VALVE, check (A0809) (96124) (Lockheed spec dwg 634127-1) (alternate to 1111-569856) (see AA2-315100-4)	4	
	1111-569856	. . VALVE, check (92003) (Lockheed spec dwg 634127-1) (alternate to 315100) (see T.O. 6J15-2-6-13)	REF	
- 9	MS29513-230	. . PACKING (96906)	4	
- 10	MS29513-223	. . PACKING (96906)	4	
- 11	MS20756D32	. . FLANGE (96906)	4	
- 12	3605-24D	. . COUPLING, flexible (79326)	4	
- 13	3605-24D3	. . . NUT ASSY (79326)	1	
- 14	3601-24D1	. . . BODY (79326)	1	
- 15	3605-24D9	. . . WASHER (79326)	2	
- 16	3605-24D24	. . . RETAINER HALF (79326)	2	
- 17	MS29513-325	. . PACKING (96906)	8	
- 18	774392-101	. . TUBE ASSY, LH pylon tank fuel transfer	1	
- 19	776615-1	. . TUBE ASSY, LH pylon tank fuel transfer	1	
- 20	774393-1	. . TUBE ASSY, LH inbd pylon tank fuel transfer	1	
- 21	774417-101	. . TUBE ASSY, RH pylon tank refuel	1	
- 22	774244-1	. . TUBE ASSY, pylon tank fuel transfer	1	
- 23	776616-1	. . TUBE ASSY, RH pylon tank fuel transfer	1	
- 24	AN924-16	. . NUT (88044)	1	
- 25	AN832-16	. . UNION (88044)	1	
- 26	767577-119	. . TUBE ASSY, air pressure	1	
- 27	770846-101	. . VALVE ASSY, mid fus fuel	1	
		Attaching Parts		
- 27A	NAS623-3-10	. . SCREW (80205)	1	
- 28	NAS623-3-12	. . SCREW (80205)	1	
- 28A	AN960D10	. . WASHER (88044)	2	
- 29	726291-4	. . SHIM, canopy latch stud	AR	
- 29A	MS21042L3	. . NUT (96906)	2	
		***		
- 30	MS21042L4	. . . NUT (96906)	4	
- 31	AN960D416	. . . WASHER (88044)	4	
- 32	AN4-7A	. . . BOLT (88044)	4	
- 32A	MS21042L5	. . . NUT (96906)	4	
- 32B	AN960D516	. . . WASHER (88044)	4	
- 33	AN5-10A	. . . BOLT (88044)	4	
- 34	772559-1	. . . FITTING ASSY, fuel vent line Y *(see fig. 110)*	1	
- 35	MS29513-226	. . . PACKING (96906)	1	
- 36	MS29513-224	. . . PACKING (96906)	2	
- 37	AN4H4A	. . . BOLT (88044)	4	
- 38	10-954-1	. . . VALVE ASSY, sniffle press regulating (A0303) (82267) (Lockheed spec dwg 633965) (see T.O. 6J15-7-20-3)	1	
- 39	24000M	. . . VALVE, altitude closing operated press relief (99643) (Lockheed spec dwg 633964-101) (see T.O. 6J15-8-109-3)	1	
- 40	MS29512-32	. . . GASKET (96906)	1	
- 41	AN924-32D	. . . NUT (88044)	1	
	3655-20D	. . . COUPLING HALF (79326)	1	
- 42	3605-20D3	. . . . NUT ASSY, coupling half (79326)	1	
- 43	3601-20D9	. . . . WASHER (79326)	2	
- 44	MS29513-218	. . . PACKING (96906)	1	

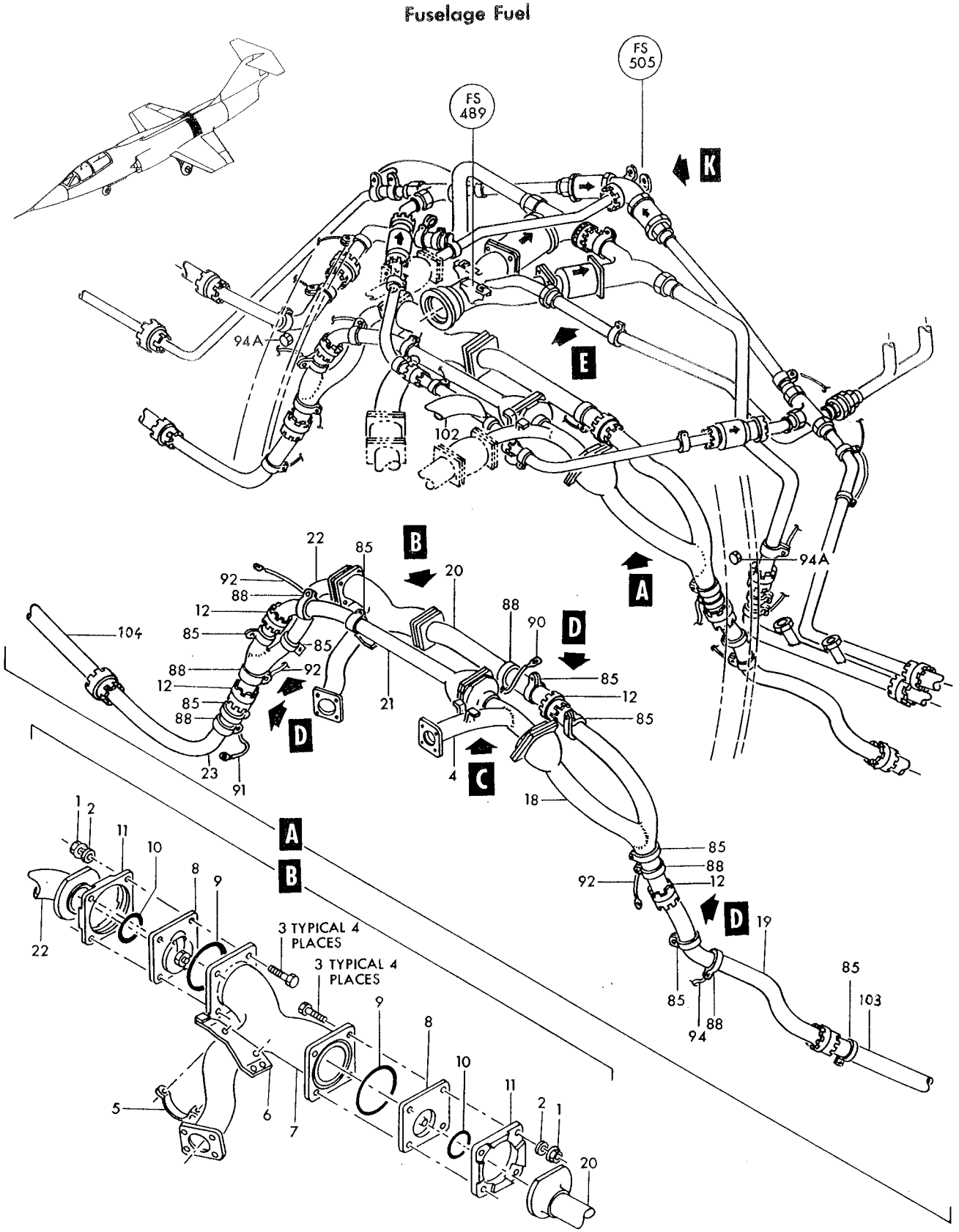

Figure 111—Fuel Transfer Piping Fuselage Station 489 to 505 (Sheet 1 of 3)

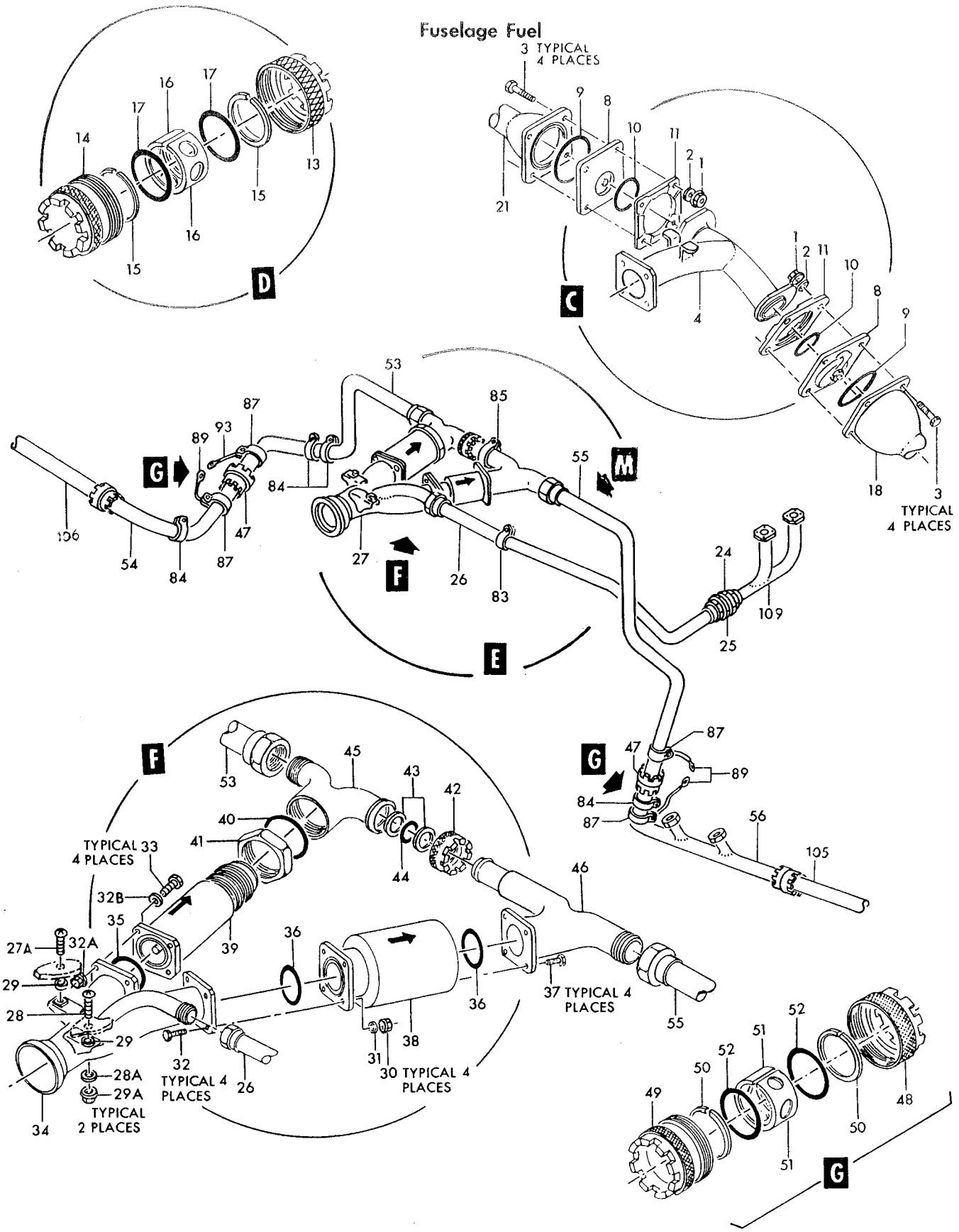

Figure 111—Fuel Transfer Piping Fuselage Station 489 to 505 (Sheet 2 of 3)

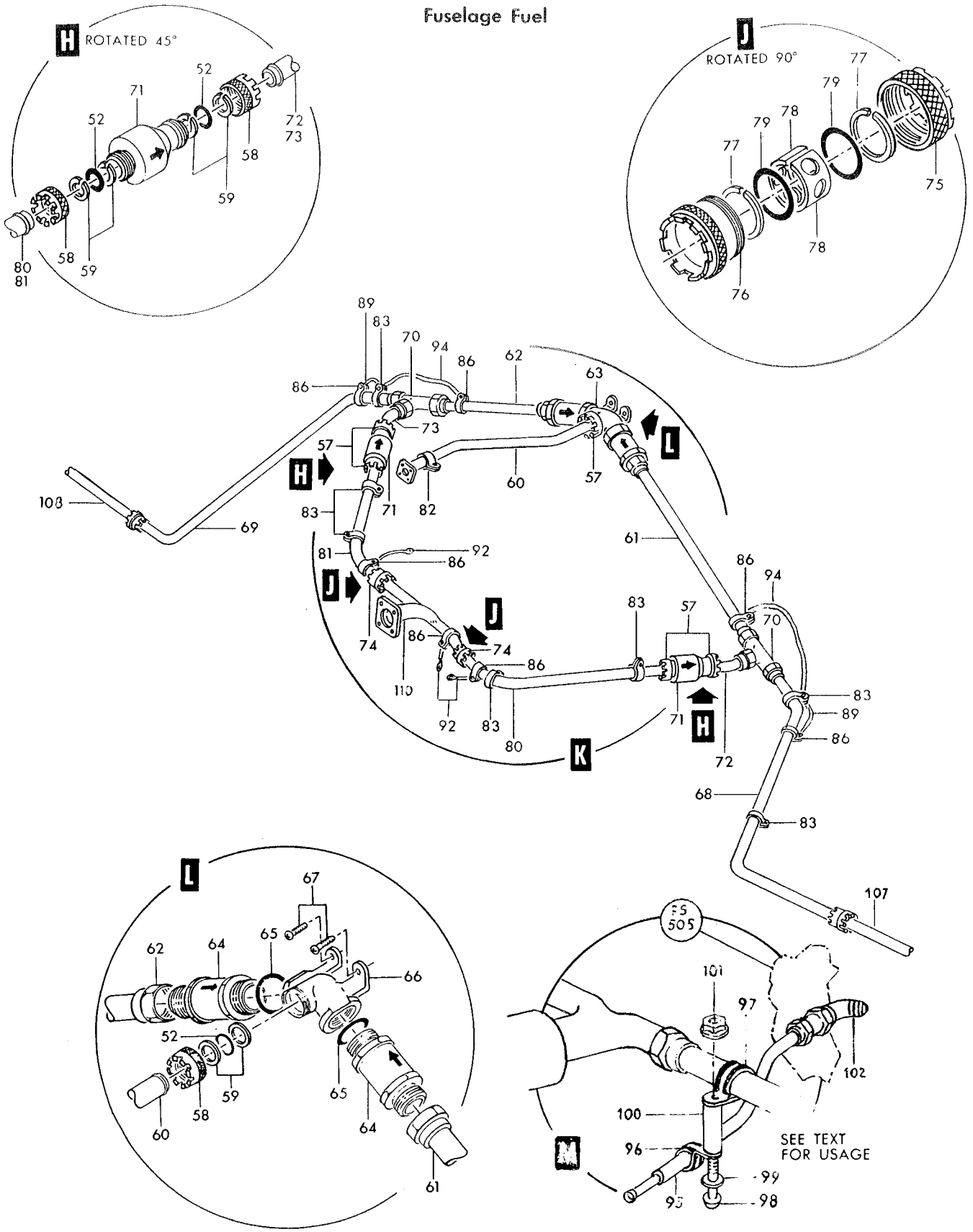

Figure 111—Fuel Transfer Piping Fuselage Station 489 to 505 (Sheet 3 of 3)

Figura e particolare	NDR	1 2 3 4 5 6 7 DENOMINAZIONE	Quant.	Codice applicab.
111- 45	762734	. . . FITTING, fuel vent line T	1	
- 46	762743	. . FITTING, fuel vent line T	1	
- 47	3605-20D	. . COUPLING, flexible (79326)	2	
- 48	3605-20D3	. . . NUT ASSY (79326)	1	
- 49	3601-20D1	. . . BODY (79326)	1	
- 50	3601-20D9	. . . WASHER (79326)	2	
- 51	3605-20D24	. . . RETAINER HALF (79326)	2	
- 52	MS29513-218	. . PACKING (96906)	9	
- 53	785201-117	. . TUBE ASSY, upper RH fus sta 497 fuel vent	1	
- 54	785213-3	. . TUBE ASSY, lower RH fus sta 497 fuel vent	1	
- 55	774152-109	. . TUBE ASSY, upper LH fuel vent	1	
- 56	793040-1	. . TUBE ASSY, lower LH fus sta 497 fuel vent *(see fig. 113)*	1	
- 57	3655-20D	. . COUPLING HALF (79326)	5	
- 58	3605-20D3	. . . NUT ASSY (79326)	1	
- 59	3605-20D9	. . . WASHER (79326)	2	
- 60	774420-1	. . TUBE ASSY, tip tank fuel *(see fig. 110)*	1	
- 61	774152-31	. . TUBE ASSY, tip tank fuel	1	
- 62	774152-35	. . TUBE ASSY, tip tank fuel	1	
- 63	784393-3	. . Y ASSY, middle fus fuel	1	
- 64	317700-9	. . . VALVE, swing check fuel (A0809) (96124) (Lockheed spec dwg 633958-9) (alternate to 1111-569865-9) (see AA9-317700-9-4)	2	
	1111-569865-9	. . . VALVE, swing check fuel (92003) (Lockheed spec dwg 633958-9) (alternate to 317700-9) (see separate lr whn avail)	REF	
- 65	MS29512-16	. . . PACKING (96906)	2	
- 66	762851	. . . SIDE OUTLET Y, fuel transfer lines	1	
		Attaching Parts		
- 67	NAS623-3-6	. . . SCREW (80205)	2	
		*		
- 68	774354-1	. . TUBE ASSY, LH tip tank fuel	1	
- 69	774245-1	. . TUBE ASSY, RH tip tank fuel	1	
- 70	AN824-16D	. . TEE (88044)	2	
- 71	40C665	. . VALVE, swing check fuel (A0303) (79294) (Lockheed spec dwg 634183-1) (see T.O. 6J15-2-152-3)	2	
- 72	774390-1	. . TUBE ASSY, aft LH tip tank refuel	1	
- 73	774388-1	. . TUBE ASSY, aft RH tip tank refuel	1	
- 74	3605-16D	. . COUPLING, flexible (79326)	2	
- 75	3605-16D3	. . . NUT ASSY (79326)	1	
- 76	3601-16D1	. . . BODY (79326)	1	
- 77	3601-16D9	. . . WASHER (79326)	2	
- 78	3605-16D24	. . . RETAINER HALF (79326)	2	
- 79	MS29513-214	. . PACKING (96906)	4	
- 80	774391-1	. . TUBE ASSY, fwd LH tip tank refuel	1	
- 81	774389-1	. . TUBE ASSY, fwd RH tip tank refuel	1	
- 82	AN742D20	. . CLAMP (88044)	1	
- 83	TA4C74D16T	. . CLAMP, loop type (84971)	8	
- 84	TA4C74D20T	. . CLAMP, loop type (84971)	5	
- 85	TA4C74D24T	. . CLAMP, loop type (84971)	9	
- 86	AN735D16	. . CLAMP (88044)	7	
- 87	AN735D20	. . CLAMP (88044)	4	
- 88	AN735D24	. . CLAMP (88044)	6	
- 89	MS25083-1BB3	. . JUMPER (96906)	5	
- 90	MS25083-1BC3	. . JUMPER (96906)	1	
- 91	MS25083-1BB4	. . JUMPER (96906)	1	
- 92	MS25083-1BB5	. . JUMPER (96906)	6	
- 93	MS25083-1BB6	. . JUMPER (96906)	1	
- 94	MS25083-1BB8	. . JUMPER (96906)	3	
- 94A	NAS428-3-10	. . BOLT (grd stud) (80205)	2	
	AN936A10	. . WASHER (grd stud) (88044)	2	
	AN935-10L	. . WASHER (grd stud) (88044)	2	
	AN345-10	. . NUT (grd stud) (88044)	2	

Figura e particolare	NDR	1	2	3	4	5	6	7	DENOMINAZIONE	Quant.	Codice applicab.
111	AN960D10								WASHER (88044)	2	
	MS21042L3								NUT (grd stud) (96906)	2	
-95	852219-101	A.							TUBE ASSY, dual air pressure regulator	1	
-96	MS21919H6	A.							CLAMP (96906)	1	
-97	MS21919H20	A.							CLAMP (96906)	1	
									Attaching Parts		
-98	MS35207-270	A.							SCREW (96906)	1	
-99	AN960PD10	A.							WASHER (88044)	1	
-100	LS607-36	A.							SPACER, phenolic (36659)	1	
-101	MS21042L3	A.							NUT (96906)	1	
-102	AN837-6D	A.							ELBOW (88044) *(see fig. 113 reqd)*	REF	
-103	770309-1								TUBE ASSY, wing pylon fuel LH *(see fig. 10 for reqd)*	REF	
-104	770309-2								TUBE ASSY, wing pylon fuel RH *(see fig. 10 for reqd)*	REF	
-105	762405-101								TUBE ASSY, wing fuel tank vent LH *(see fig. 10 for reqd)*	REF	
-106	762405-102								TUBE ASSY, wing fuel tank vent RH *(see fig. 10 for reqd)*	REF	
-107	762406-101								TUBE ASSY, wing fuel tank vent LH *(see fig. 10 for reqd)*	REF	
-108	762406-102								TUBE ASSY, wing fuel tank vent RH *(see fig. 10 for reqd)*	REF	
-109	771707-1								MANIFOLD ASSY, main fuel tank air pressure regulator *(see fig. 113 for reqd)*	REF	
-110	774482-1								TUBE ASSY, fus tip tank refuel *(see fig. 110 for reqd)*	REF	

A - Reqd per AA.1F-104-OT-764

Figura e particolare	NDR	1 2 3 4 5 6 7 DENOMINAZIONE	Quant.	Codice applicab.
		MAIN FUEL FEED SHUTOFF VALVE, STRAINER AND PIPING		
112-1	762002-8	. TUBE ASSY, fwd main fuel tank (NHA 849138-101) *(see fig. 102)*	1	
-2	MS29513-227	. . PACKING (96906)	3	
-3	763100	. . TUBE ASSY, eng fuel	1	
	764136-101	. SUPPORT INSTL, firewall fuel shutoff valve control linkage (LH only) *(see fig. 40 for reqd)*	REF	
-4	764136-5	. . SUPPORT	2	
-5	NAS221-10	. . SCREW (80205)	1	
-6	AN960-10L	. . WASHER (88044)	2	
-7	LS2326-3S0270	. . BUSHING, plain (36659)	1	
-7A	MS21042L3	. . NUT (96906)	1	
-8	796960-101	. . LEVER, firewall fuel shutoff control	1	
	764136-7	. NAMEPLATE INSTL, firewall main fuel shutoff valve control (LH only) *(see fig. 31 for reqd)*	REF	
-9	765968-1	. . NAMEPLATE, main fuel feed shutoff valve manual override	1	
	762401-109	. PLUMBING INSTL, fuel strainer and shutoff valve (NHA 849140-101)	1	
	764136-103	. . LINKAGE INSTL, firewall fuel shutoff valve control	1	
-10	NAS221-10	. . . SCREW (80205)	2	
-10A	AN960-10L	. . . WASHER (88044)	4	
-11	LS2326-3S0270	. . . BUSHING, plain (36659)	1	
-12	LS3859-3-5	. . . BUSHING, plain (36659)	1	
-13	MS21042L3	. . . NUT (96906)	2	
-14	764153	. . . LINK, firewall fuel shutoff valve control	1	
-15	AV16B1566D2A	A. . VALVE, (B17) motor driven fuel shutoff (73760) (Lockheed spec dwg 634261-103) (Reworked and reidentified to AV16B1941D per AA.1F-104-OT-731) (see T.O. 6J15-9-25-3)	1	6701-6735
	AV16B1941D	B. . VALVE, (B17) motor driven fuel shutoff (A0303) (Reworked and reidentified from AV16B1566D2A) (see sep. publ. whn avail) (Alternate to SM2642)	REF	6701-6735
	SM2642	B. . VALVE, (B2000) motor driven fuel shutoff (A0303) (see separate publication when available) (Alternate to AV16B1941D)	1	
		Partial Breakdown Follows		
-16	MS29513-228	. . . PACKING (96906)	2	
	MS9021-228	. . . PACKING (96906)	2	
-18	750464-101	. . TUBE ASSY, fuel strainer (36659) (Lockheed spec dwg 750464-101) *(see fig. 56)*	1	
-19	MS20005-32	. . BOLT (96906)	4	
-20	MS20002C5	. . WASHER (96906)	4	
-21	NAS221-8	. . SCREW (80205)	7	
-22	NAS221-10	. . SCREW (80205)	2	
-23	AN3-4A	. . BOLT (88044)	2	
-24	NAS1005-3H	. . BOLT (80205)	4	
-25	MS29513-226	. . PACKING (96906)	2	
-26	208-013-500	. . STRAINER, aircraft fuel system (A0303) (95950) (Lockheed spec dwg 633969-7) (see T.O. 6J5-67-3)	1	
-27	NAS1105-8D	. . BOLT (80205)	3	
-27A	AN5H7A	. . BOLT (88044)	1	
-28	MS21042L5	. . NUT (96906)	4	
-29	MS29512-4	. . PACKING (96906)	1	
-30	AN814-4L	. . PLUG (88044)	1	
-31	028-601602R0185	. . HOSE ASSY, strainer to pump fuel (00624) (Lockheed spec dwg 751000-3) *(see fig. 245)*	1	
-32	MS29512-6	. . PACKING (96906)	2	
-33	AN924-6D	. . NUT (88044)	2	
-34	475C59NW	. . VALVE, self-locking fuel drain (91511) (Lockheed spec dwg 633691-4) (8101-2 is alternate) (see T.O. 6J15-4-26-3)	1	
	8101-2	. . VALVE, self-locking fuel drain (75361) (Lockheed spec dwg 633691-4) (alternate to 475C59NW) (see separate T.O. when available)	REF	
-35	AN837-6D	. . ELBOW (88044)	1	
-36	762788-3	. . TUBE ASSY, drain	1	
-37	726271-3	. . FITTING, 3/8 inch overboard drain	1	

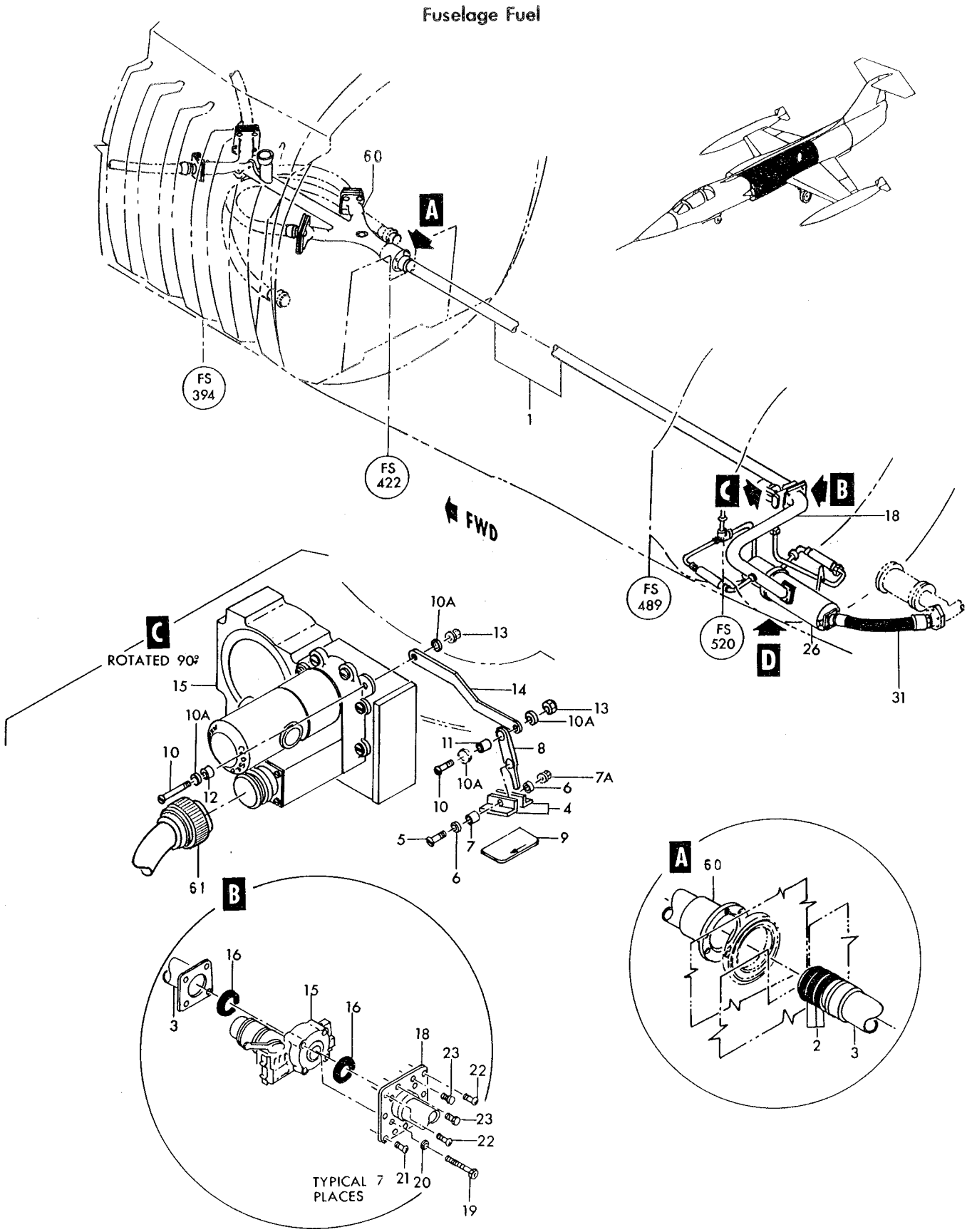

Figure 112—Main Fuel Feed Shutoff Valve Strainer and Piping (Sheet 1 of 2)

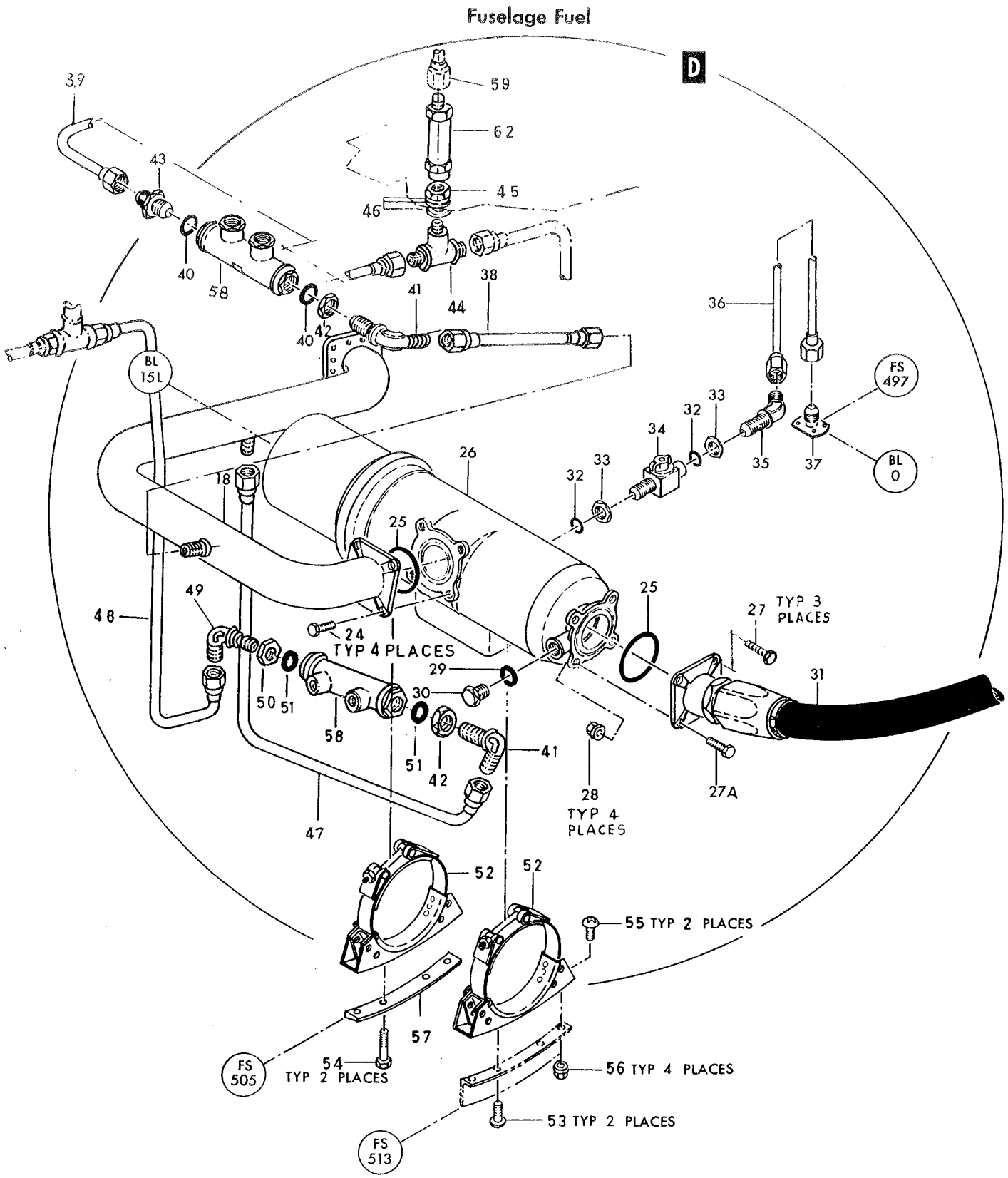

Figure 112— Main Fuel Feed Shutoff Valve, Strainer and Piping (Sheet 2 of 2)

Figura e particolare	NDR	1	2	3	4	5	6	7	DENOMINAZIONE	Quant.	Codice applicab.
112-38	601000-8D0054								HOSE ASSY (fuel line to heat exchanger fuel bleed) (00624)	1	
-39	851084-117								TUBE ASSY, heat exchanger to fuel tank	1	
-40	MS29512-8								PACKING (96906)	2	
-41	AN833-8D								ELBOW (88044)	2	
	AN960D1216								WASHER (88044)	2	
-42	AN924-8D								NUT (88044)	2	
-43	AN815-8D								UNION (88044)	1	
-44	AS1039D080810								TEE (92003)	1	
-45	AN924-10D								NUT (88044)	1	
-46	AN960D1416								WASHER (88044)	3	
-47	851084-113								TUBE ASSY, heat exhanger to fuel tank	1	
-48	851084-115								TUBE ASSY, fuel line to heat exchanger	1	
-49	AN833-8D								ELBOW (88044)	1	
-50	AN924-8D								NUT (88044)	1	
-51	MS29512-08								PACKING (96906)	2	
	762401-3	C.							BRACKET INSTL, fuel strainer and shutoff valve (LH only) *(see fig. 31 for reqd)*	REF	6701-6815
	762401-111	D.							BRACKET INSTL, fuel strainer and shutoff valve (LH only) *(see fig. 31 for reqd)*	REF	6816-
-52	772470-101	C.							SUPPORT ASSY, fuel strainer (Modified and reidentified to 772470-103 per AA.1F-104-OT-796	2	6701-6815
	772470-103	D.							SUPPORT ASSY, fuel strainer (Supersedes 772470-101 per AA.1F-104-OT-796)	2	6816-
									Attaching Parts		
-53	NAS623-3-10								SCREW (80205)	2	
-54	NAS1103-10								BOLT (80205)	2	
-55	NAS623-3-2								SCREW (80205)	2	
-56	MS21042L3								NUT (96906)	4	
-57	772472-1								SHIM, fuel strainer	1	
-58	153780								HEAT EXCHANGER, hydraulic system oil to fuel (A0076) (70210) (Lockheed spec dwg 668425-1) (see T.O. 9H14-11-3) *(see fig. 122 for reqd)*	REF	
-59	851084-121								TUBE ASSY, heat exchanger to fuel tank fuel bleed *(see fig. 110 for reqd)*	REF	
-60	851068-101								MANIFOLD, fwd fuel tank *(see fig. 102 for reqd)*	REF	
	849591-101								HARNESS ASSY, engine starter disconnect to fuel cell splice *(see fig. 192 for reqd)*	REF	6701-6765
	852136-101								HARNESS ASSY, engine starter disconnect to fuel cell splice *(see fig. 192 for reqd)*	REF	6766-
-61	MS25183-14S5S								CONNECTOR, (P18) plug (engine fuel shutoff valve) (96906)	1	
-62	10C117								VALVE, check (82829) (Lockheed spec dwg 671419-101) (see separate publication when available) *(see fig. 110 for reqd)*	REF	

A - Removed per AA.1F-104-OT-731
B - Reqd per AA.1F-104-OT-731
C - Removed per AA.1F-104-OT-796
D - Reqd per AA.1F-104-OT-796

Figura e particolare	NDR	1 2 3 4 5 6 7 DENOMINAZIONE	Quant.	Codice applicab.
		FUEL TRANSFER PRESSURE REGULATOR AND PIPING		
113- 1	793040-1	TUBE ASSY, lower LH fus sta 497 fuel vent *(see fig. 111 for reqd)*	REF	
	777662-501	VALVE INSTL, tip and pylon tank air depressurization (NHA 849140-101)	1	6701-6765
	777662-103	VALVE INSTL, tip and pylon tank air depressurization (NHA 849140-101)	1	6766-
- 2	785201-75	TUBE ASSY, pylon tank air	1	
- 3	785201-85	TUBE ASSY, tip tank air	1	
- 4	LS7576-5	DECAL, ident (fuel tank vent) (36659)	1	
- 5	774152-101	TUBE ASSY, pylon tank air to depressurization valve	1	
- 6	774152-105	TUBE ASSY, tip tank air to depressurization valve	1	
	777662-5	BRACKET ASSY, tip and pylon tank air depressurization valve	1	6701-6765
	777662-105	BRACKET ASSY, tip and pylon tank air depressurization valve	1	6766-
- 7	AN833-12D	F. ELBOW (88044) (Reworked and reidentified to 852212-101 per AA.1F-104-OT-713)	3	6701-6765
	852212-101	G. ELBOW, tip and pylon tank air depressurization (Supersedes AN833-12D per AA.1F-104-OT-713)	3	6766-
- 8	AN924-12D	NUT (88044)	3	
- 9	AN815-12D	UNION (88044)	1	
- 10	MS29512-12	PACKING (96906)	4	
- 11	777665-1	BRACKET ASSY, depressurization valve	1	
		Attaching Parts		
- 12	NAS517-3-3	SCREW (80205)	3	
- 13	NAS1203-2	SCREW (80205)	2	
	787880-1	HARNESS ASSY, pylon tank depressurization valve	1	
- 14	MS3103-12S3P	CONNECTOR, (J66) receptacle (pylon tank depressurization valve disconnect) (96906)	1	
		Attaching Parts		
- 15	AN515-4R8	SCREW (88044)	3	
- 16	AN500A4-8	SCREW (88044)	1	
	AN960D4	WASHER (88044)	4	
	MS21042L04	NUT (96906)	4	
- 17	2079-1	VALVE, (L22) solenoid air shutoff (pylon tank depressurization) (A0303) (98439) (Lockheed spec dwg 634212-3) (see T.O. 6J15-10-167-3)	1	
		Attaching Parts		
- 18	NAS623-3-30	SCREW (80205)	2	
- 19	LS881-4	WASHER, plain aluminum pylon tank air depressurization (36659)	4	
- 20	NAS43DD3-12	SPACER (80205)	2	
- 21	AN960D10	WASHER (88044)	2	
- 22	MS21042L3	NUT (96906)	2	
	787874-1	HARNESS ASSY, tip tank depressurization valve	1	
- 23	MS3103-12S3PW	CONNECTOR, (J67) receptacle (tip tank depressurization valve disconnect) (96906)	1	
		Attaching Parts		
- 24	AN515-4R8	SCREW (88044)	3	
- 25	AN500A4-8	SCREW (88044)	1	
	AN960D4	WASHER (88044)	4	
	MS21042L04	NUT (96906)	4	
- 26	2079-1	VALVE, (L22) solenoid air shutoff (tip tank depressurization) (A0303) (98439) (Lockheed spec dwg 634212-3) (see T.O. 6J15-10-167-3)	1	
		Attaching Parts		
- 27	NAS623-3-40	SCREW (80205)	2	
- 28	AN960D10	WASHER (88044)	4	
- 29	NAS43DD3-44	SPACER (80205)	2	
- 30	LS881-4	WASHER, plain aluminum tip tank depressurization (36659)	4	
- 31	MS21042L3	NUT (96906)	2	
- 32	MS35489-4	GROMMET (96906)	1	

Fuselage Fuel

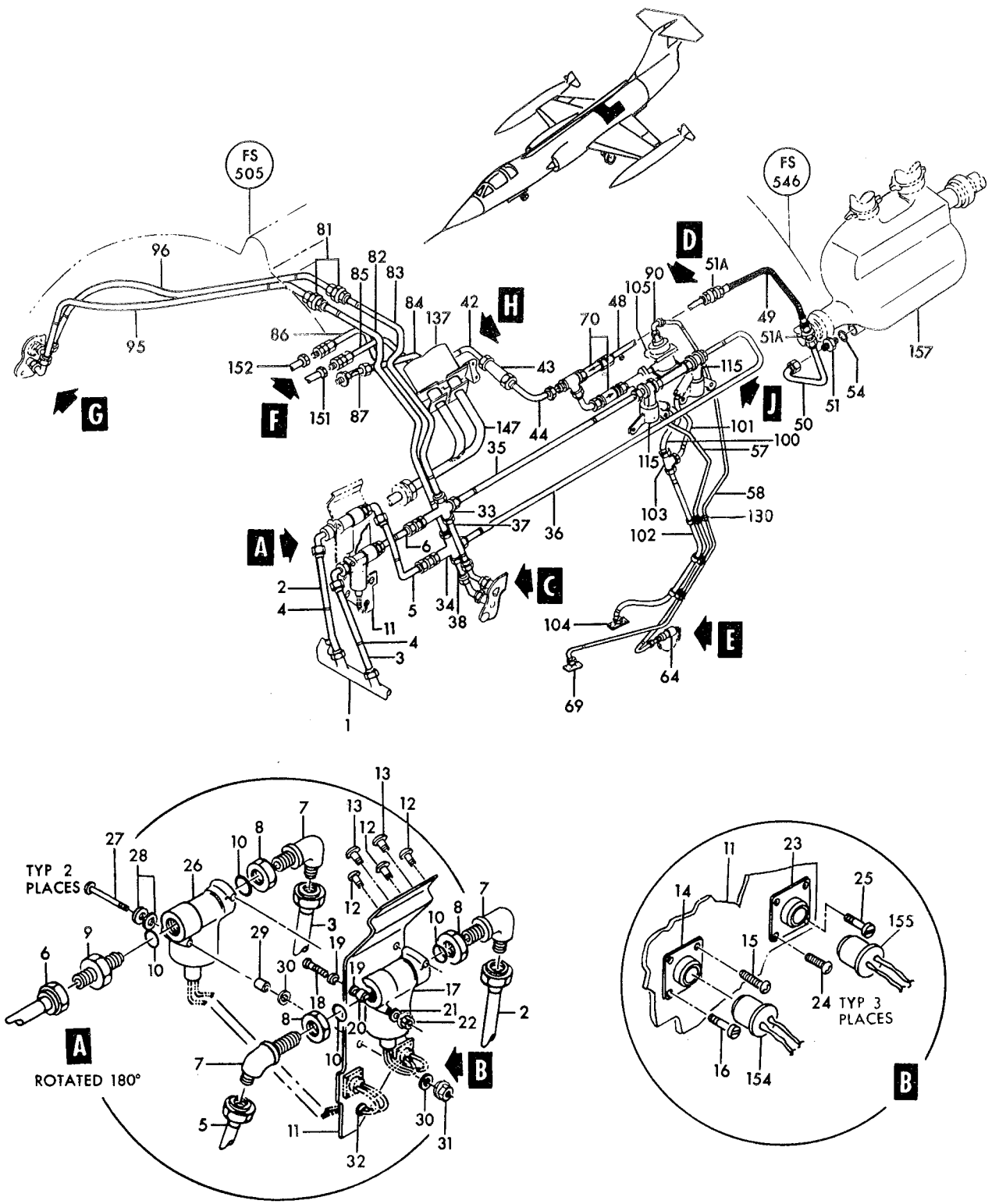

Figure 113—Fuel Transfer Pressure Regulator and Piping (Sheet 1 of 3)

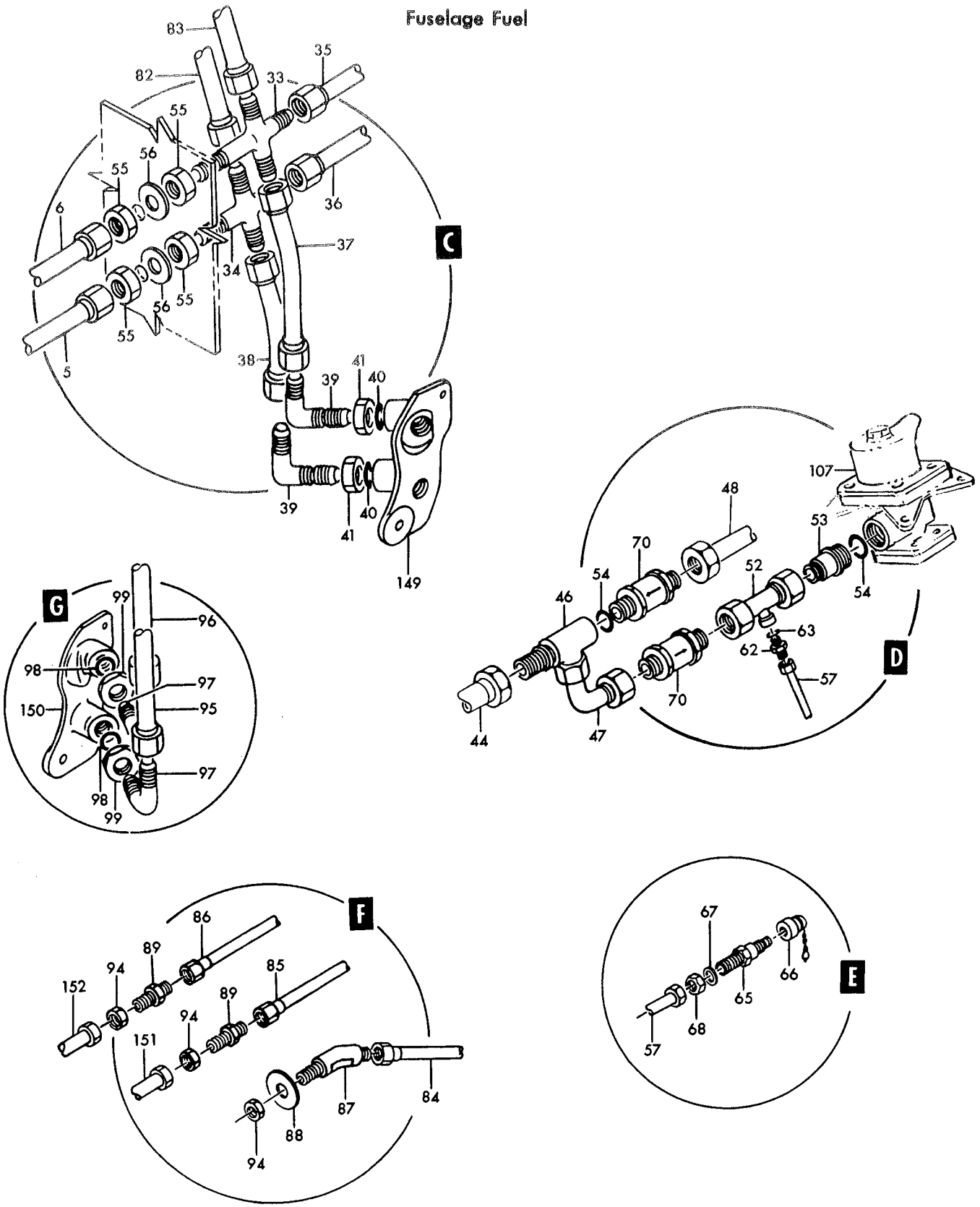

Figure 113—Fuel Transfer Pressure Regulator and Piping (Sheet 2 of 3)

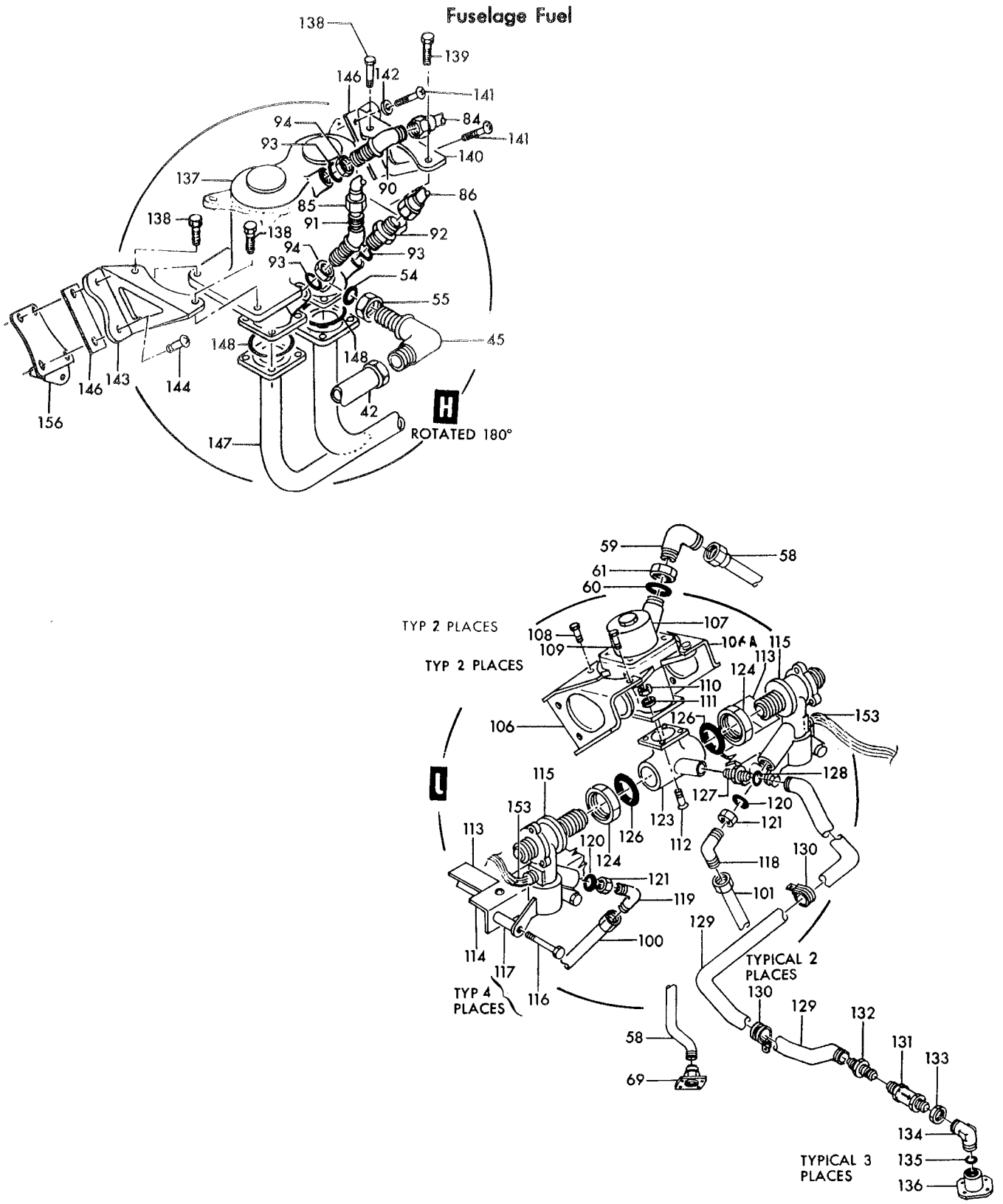

Figure 113—Fuel Transfer Pressure Regulator and Piping (Sheet 3 of 3)

Figura e particolare	NDR	1	2	3	4	5	6	7	DENOMINAZIONE	Quant.	Codice applicab.
113	777666-1			.	.	.	.	.	CLIP, depressurization valve	1	
	777667-1			.	.	.	.	.	STIFFENER ASSY, depressurization valve	1	
	784267-103	L.							PLUMBING INSTL, LH side engine compartment *(see fig. 31 for reqd)*	REF	6701-6840
	784267-109	M.							PLUMBING INSTL, LH side engine compartment *(see fig. 31 for reqd)*	REF	6841-
- 33	727998-5			.	.	.	.	.	CROSS, tip tank air depressurization	1	
- 34	727999-5			.	.	.	.	.	CROSS, pylon tank air depressurization	1	
- 35	762788-26			.	.	.	.	.	TUBE ASSY, air pressure	1	
- 36	762788-27			.	.	.	.	.	TUBE ASSY, air pressure	1	
- 37	762788-30			.	.	.	.	.	TUBE ASSY, air pressure	1	
- 38	762788-28			.	.	.	.	.	TUBE ASSY, air pressure	1	
- 39	AN837-10D			.	.	.	.	.	ELBOW (88044)	2	
- 40	3297-402-10			.	.	.	.	.	PACKING, O Ring (81400)	2	
- 41	AN924-10D			.	.	.	.	.	NUT (88044)	2	
- 42	785201-67			.	.	.	.	.	TUBE ASSY, air pressure	1	
- 43	849032-101	L.		.	.	.	.	.	VENTURI, fuel system air pressure regulator	1	6701-6840
	849032-103	M.		.	.	.	.	.	VENTURI, fuel system air pressure regulator	1	
- 44	785201-65			.	.	.	.	.	TUBE ASSY, air pressure	1	
- 45	AN833-12D	D.		.	.	.	.	.	ELBOW (88044)	1	6701-6740
	AN833-12J	E.		.	.	.	.	.	ELBOW (88044)	1	
- 46	AN784D12	A.		.	.	.	.	.	TEE (88044)	1	6701-6740
	AN784J12	B.		.	.	.	.	.	TEE (88044)	1	
- 47	775107-29			.	.	.	.	.	TUBE ASSY, air pressure	1	
- 48	775107-33			.	.	.	.	.	TUBE ASSY, air pressure	1	
- 49	750906-1			.	.	.	.	.	HOSE ASSY, heat exchanger	1	
- 50	774152-93			.	.	.	.	.	TUBE ASSY, air pressure *(see fig. 153)*	1	
- 51	AN815-12D	A.		.	.	.	.	.	UNION (88044)	1	6701-6740
	AN815-12J	B.		.	.	.	.	.	UNION (88044)	1	
- 51A	AN815-12D	A.		.	.	.	.	.	UNION (88044)	2	6701-6740
	AN815-12J	B.		.	.	.	.	.	UNION (88044)	2	
- 52	774873-1			.	.	.	.	.	TUBE ASSY, air pressure regulator	1	
- 53	771408-3			.	.	.	.	.	LIMITER, air regulator flow	1	
- 54	3297-402-12			.	.	.	.	.	PACKING, O Ring (81400)	4	
- 55	AN924-12D			.	.	.	.	.	NUT (88044)	5	
- 56	AN960D1716			.	.	.	.	.	WASHER (88044)	2	
- 57	774152-5			.	.	.	.	.	TUBE ASSY air pressure ground service connection	1	
- 58	775107-41			.	.	.	.	.	TUBE ASSY, vent single pressure regulator	1	
- 59	AN833-6D			.	.	.	.	.	ELBOW (88044)	1	
- 60	3297-402-6			.	.	.	.	.	PACKING, O Ring (81400)	1	
- 61	AN924-6D			.	.	.	.	.	NUT (88044)	1	
- 62	AN815-4D			.	.	.	.	.	UNION (88044)	1	
- 63	3297-402-4			.	.	.	.	.	PACKING, O Ring (81400)	1	
- 64	5712-90			.	.	.	.	.	COUPLING HALF AND CAP ASSY, self-sealing (91561) (Lockheed spec dwg 634186-1) (alternate to 1836)	1	
	1836			.	.	.	.	.	COUPLING HALF AND CAP ASSY, self-sealing (86831) (Lockheed spec dwg 634186-1) (alternate to 5712-90)	REF	
- 65	5712-83			.	.	.	.	.	COUPLING HALF, self-sealing (91561) (Lockheed spec dwg 634186-3) (alternate to 1834)	1	
	1834			.	.	.	.	.	COUPLING HALF, self-sealing (86831) (Lockheed spec dwg 634186-3) (alternate to 5712-83)	REF	
- 66	5712-84			.	.	.	.	.	CAP AND CHAIN ASSY (91561) (Lockheed spec dwg 634186-5) (alternate to 1835)	1	
	1835			.	.	.	.	.	CAP AND CHAIN ASSY (86831) (Lockheed spec dwg 634186-5) (alternate to 5712-84)	REF	
- 67	AN960D716			.	.	.	.	.	WASHER (88044)	1	
- 68	AN924-4D			.	.	.	.	.	NUT (88044)	1	
- 69	726271-3			.	.	.	.	.	FITTING, 3/8 overboard drain	1	
- 70	SM2308B	C.		.	.	.	.	.	VALVE, hot air check (A0303) (Alternate to 24-155-301)	2	
	24-155-301			.	.	.	.	.	VALVE, hot air check (82267) (Alternate to SM2308B) (Lockheed spec dwg 633968-7) (see LR6-14404-429-3)	REF	
	784267-515		.						PLUMBING INSTL, engine compartment (NHA 849140-11) *(see fig. 246)*	1	6701-6815

Figura e particolare	NDR	1 2 3 4 5 6 7 DENOMINAZIONE	Quant.	Codice applicab.
113	784267-107	PLUMBING INSTL, engine compartment (NHA 849140-101) *(see fig. 246)*	1	6816-
- 81	AN815-10D	UNION (88044)	2	
- 82	762788-29	TUBE ASSY, air pressure	1	
- 83	762788-31	TUBE ASSY, air pressure	1	
- 84	762788-53	TUBE ASSY, pressure regulator vent	1	
- 85	762788-54	TUBE ASSY, pressure regulator sensing (dual)	1	
- 86	767577-73	TUBE ASSY, pressure regulator sensing (dual)	1	
- 87	727553-3	H. ELBOW, sensing dual pressure regulator	1	6701-6815
	AN837-6D	I. ELBOW (88044) *(see fig. 111)*	1	
- 88	AN960D916	WASHER (88044)	1	
- 89	AN832-6D	UNION (88044)	2	
- 90	AN833-6D	ELBOW (88044)	1	
- 91	AN837-6D	ELBOW (88044)	1	
- 92	AN815-6D	UNION (88044)	1	
- 93	3297-402-6	PACKING, O Ring (81400)	3	
- 94	AN924-6D	NUT (88044)	5	
	784267-5	PLUMBING INSTL, engine compartment RH *(see fig. 31 for reqd)*	REF	
- 95	762788-66	TUBE ASSY, engine air pressure	1	
- 96	762788-67	TUBE ASSY, engine air pressure	1	
- 97	AN837-10D	ELBOW (88044)	2	
- 98	3297-402-10	PACKING, O Ring (81400)	2	
- 99	AN924-10D	NUT (88044)	2	
	726646-3	FITTING, engine overboard 1 inch drain *(see fig. 245)*	1	
	789667-101	REGULATOR INSTL, pylon and tip tank pressure *(see fig. 31 for reqd)*	REF	
	790142-1	PLUMBING INSTL, air shutoff valve drain	1	
-100	785201-59	TUBE ASSY, air shutoff valve drain (pylon tank)	1	
-101	785201-61	TUBE ASSY, air shutoff valve drain (tip tank)	1	
-102	785201-63	TUBE ASSY, air shutoff valve drain	1	
-103	AN824-4D	TEE (88044)	1	
-104	726495-3	FITTING, 1/4 inch overboard drain	1	
-105	789667-103	REGULATOR ASSY, pylon and tip tank pressure	1	
		Attaching Parts		
	NAS623-3-2	SCREW (80205)	8	
	AN960D10	WASHER (88044)	8	
	MS21042L3	NUT (96906)	8	
		✲		
-106	764690-3	BRACKET, air pressure regulator	1	
-106A	764690-4	BRACKET, air pressure regulator	1	
-107	5077-5	REGULATOR, drop tank air pressure (A0303) (98439) (Lockheed spec dwg 634125-5) (see T.O. 6J11-4-33)	1	
		Attaching Parts		
-108	NAS1104-7	BOLT (80205)	2	
-109	NAS1104-6	BOLT (80205)	2	
	AN960D416	WASHER (88044)	4	
	MS21042L4	NUT (96906)	4	
		✲		
-110	MS21042L3	NUT (96906)	4	
-111	AN960D10	WASHER (88044)	4	
-112	NAS623-3-9	SCREW (80205)	4	
	763309	BRACKET ASSY, fuel tip tank air pressure shutoff	1	
-113	763309-4	ANGLE, fuel tip tank air pressure shutoff bracket	2	
-114	763309-3	ANGLE, fuel tip tank air pressure shutoff bracket	1	
	MS21042L3	NUT (96906)	2	
	AN960D10	WASHER (88044)	2	
	NAS221-9	SCREW (80205)	2	
-115	17710	VALVE, (B30) solenoid air (99643) (Lockheed spec dwg 634271-1) (see T.O. 9P5-5-101-3)	2	
		Attaching Parts		
-116	NAS1104-24	BOLT (80205)	2	
-117	NAS43DD4-72	SPACER (80205)	2	

Figura e particolare	NDR	1 2 3 4 5 6 7 DENOMINAZIONE	Quant.	Codice applicab.
113	AN960D416	. . . WASHER (88044)	2	
	MS21042L4	. . . NUT (96906)	2	
		*		
-118	AN837-4D	. . . ELBOW (88044)	1	
-119	AN833-4D	. . . ELBOW (88044)	1	
-120	MS29512-4	. . . PACKING (96906)	2	
-121	AN924-4D	. . . NUT (88044)	2	
-123	LS9330-1	. . . TEE ASSY, bleed air regulator (36659)	1	
-124	AN924-12	. . . NUT (88044)	2	
-126	NAS1595-12	. . . PACKING (80205)	2	
	847637-103	. DRAIN INSTL, fuel tank pressurization system *(see fig. 31 for reqd)*	1	
-127	AN815-6D	. . UNION (88044)	1	
-128	NAS1595-6	. . PACKING (80205)	1	
-129	779274-111	. . TUBE ASSY, refueling line 358 bulkhead to 382 bulkhead	1	
-130	LS7357DT6	. . CLAMP, loop cushioned (36659)	3	
		Attaching Parts		
	AN520-10R10	. . SCREW (88044)	1	
	AN960D10	. . WASHER (88044)	1	
	MS21042L3	. . NUT (96906)	1	
		*		
-131	P54-526	. . VALVE, automatic fuel drain (91816) (Lockheed spec dwg 634043-101)	1	
-132	AN832-6D	. . UNION (88044)	1	
-133	AN924-6D	. . NUT (88044)	1	
-134	AN939D6	. . ELBOW (88044)	1	
-135	MS29512-6	. . PACKING (96906)	3	
-136	728433-1	. . FITTING, fuel drain	1	
	762820-501	. REGULATOR INSTL, main fuel tank pressure (NHA 849140-101)	1	
-137	8105-7	N. . REGULATOR, dual air pressure (A1384) (75662) (Lockheed spec dwg 633966-7) (see T.O. 9P5-3-55-3)	1	
		Attaching Parts		
-138	NAS1104-8	. . BOLT (80205)	3	
-139	NAS1104-9	. . BOLT (80205)	1	
	AN960-416	. . WASHER (88044)	4	
	MS21042L4	. . NUT (96906)	4	
		*		
-140	762463-3	. . BRACKET, pressure regulator forward support	1	
		Attaching Parts		
-141	NAS623-3-10	. . SCREW (80205)	2	
-142	LS881-4	. . WASHER (36659)	1	
		*		
-143	762969-3	. . BRACKET, pressure regulator aft support *(see fig. 81)*	1	
		Attaching Parts		
-144	NAS623-3-14	. . SCREW (80205) *(see fig. 81 for reqd)*	REF	
		*		
-146	771708-1	. . SHIM, pressure regulator forward and aft support bracket	2	
	784267-11	. . MANIFOLD INSTL, engine compartment	1	
-147	771707-1	. . . MANIFOLD ASSY, air pressure regulator dual *(see fig. 111)*	1	
		Attaching Parts	8	
	NAS623-3-7	. . . SCREW (80205)	8	
	AN960D10	. . . WASHER (88044)	8	
	MS21042L3	. . . NUT (96906)	8	
		*		
-148	1820-402-21	. . . PACKING, O Ring (81400)	2	
-149	762886L	. FITTING, mating plane air lines *(see fig. 10 for reqd)*	REF	
-150	762886R	. FITTING, mating plane air lines *(see fig. 10 for reqd)*	REF	
-151	767577-115	. TUBE ASSY, sensing air *(see fig. 110 for reqd)*	REF	
-152	774152-99	. TUBE ASSY, air pressure *(see fig. 110 for reqd)*	REF	
	849549-101	. HARNESS ASSY, P-123 and P-124 to LH engine compt *(see fig. 192 for eqd)*	REF	
-153	MS3106K10SL3S	. . CONNECTOR, (P115) plug (pylon and tip tank air shutoff valve) (96906)	2	

Figura e particolare	NDR	DENOMINAZIONE 1 2 3 4 5 6 7	Quant.	Codice applicab.
113	MS3057-4A	. . ADAPTER (96906)	2	
	849591-101	. HARNESS ASSY, engine starter disconnect to fuel cell splice *(see fig. 192 for reqd)*	REF	6701-6765
	852136-101	. HARNESS ASSY, engine starter disconnect to fuel cell splice *(see fig. 192 for reqd)*	REF	6766-
-154	MS25183-12S3SW	. . CONNECTOR, (P132) plug (tip tank depressurization valve disconnect) (96906)	1	
-155	MS25183-12S3S	. . CONNECTOR, (P104) plug (pylon tank depressurization valve disconnect) (96906)	1	
-156	783061-1	. BRACKET ASSY, fus sta 516 throttle control cable pulley *(see fig. 81 for reqd)*	REF	
-157	8241C	. HEAT EXCHANGER, primary (78385) (Lockheed spec dwg 644562-13) (see T.O. 15A4-26-13) *(see fig. 153 for reqd)*	REF	

A - Removed per AA.1F-104-OT-675A
B - Reqd per AA.1F-104-OT-675A
C - Reqd per AA-1F.104-OT-716A and AA.1F-104-OT-702A
D - Removed per AA.1F-104-OT-775
E - Reqd per AA.1F-104-OT-775
F - Removed per AA.1F-104-OT-713
G - Reqd per AA.1F-104-OT-713
H - Removed per AA.1F-104-OT-764
I - Reqd per AA.1F-104-OT-764
L - Removed per AA.1F-104-OT-800
M - Reqd per AA.1F-104-OT-800
N - Modified per AA.1F-104-OT-801

Figura e particolare	NDR		1 2 3 4 5 6 7 DENOMINAZIONE	Quant.	Codice applicab.
			FUSELAGE STATION 184 TO 614 HYDRAULIC PIPING AND EQUIPMENT COMPLETE		
114	850939-101		. HYDRAULIC INSTL fus sta 184 to 614 complete (NHA 849138-101) . . .	1	
- 1	784004-1		. . PLUMBING INSTL cockpit brake *(see fig. 115)*	1	
- 2	789425-3		. . PLUMBING INSTL nose wheel well *(see fig. 116)*	1	
- 3	784006-1		. . PLUMBING INSTL fus sta 305 to 335 ram air turbine *(see fig. 117 and 127)*	1	
- 4	851206-101		. . PLUMBING INSTL fus sta 335 to 422 forward mid fuselage *(see fig. 117 and 127)*	1	
- 5	784007-1		. . TURBINE INSTL, ram air *(see fig. 50 and 127)*	1	
- 6	851112-103		. . PLUMBING INSTL, LH main wheel well *(see fig. 118, 119 and 127)* . .	1	
- 7	851112-105		. . PLUMBING INSTL, main wheel well *(see fig. 118, 119 and 127)* . . .	1	
- 8	851173-103		. . PLUMBING INSTL, main wheel well *(see fig. 120 and 121)*	1	
- 9	850949-103		. . PLUMBING INYTL, LH engine compartment hydraulic *(see fig. 122 and 126)*	1	
-10	851077-103		. . PLUMBING INSTL, RH engine compartment *(see fig. 123, 124 and 126)*	1	
-11	789391-101		. . PANEL INSTL, reservoir ground service *(see fig. 128)*	1	
-12	785246-1		. . PLUMBING INSTL, auto-pilot aileron actuator *(see fig. 123)*	1	
	850940-101		. HYDRAULIC INSTL, mid LH complete side panel *(see fig. 31 for reqd)* . .	REF	
-13	850949-101		. . PLUMBING INSTL, LH engine compartment hydraulic *(see fig. 122)* . .	1	
-14	789390-101		. . RESERVOIR INSTL, No. 1 main hydraulic system *(see fig. 122)* . . .	1	6701-6830
	789390-105		. RESERVOIR INSTL, No. 1 main hydraulic system *(see fig. 122)* . . .	1	6831-
	850941-101		. HYDRAULIC INSTL, mid RH complete side panel *(see fig. 31 for reqd)* . .	REF	
-15	851077-101		. . PLUMBING INSTL, RH engine compartment *(see fig 123, 124, 126 and 127)*	1	
-16	789390-103		. . RESERVOIR INSTL, No. 2 main hydraulic system *(see fig. 123)* . . .	1	6701-6790; 6831-
	852727-101	C.	. RESERVOIR INSTL, No. 2 main hydraulic system *(see fig. 123)* . . .	1	6791-6830
-17	798415-101	A.	PLUMBING INSTL, secondary air by-pass flap (NHA 849140-101) *(see fig. 125)*	1	6701-6740
	851198-101	B.	PLUMBING INSTL, secondary air by-pass flap (NHA 849140-101) *(see fig. 125)*	1	
-18	785323-101	A.	FLAP INSTL, air by-pass (NHA 849140-101) *(see fig. 125)*	1	6701-6740
	851056-101	B.	FLAP INSTL, air by-pass (NHA 849140-101) *(see fig. 125)*	1	
-19	850931-103		. ALTERNATOR INSTL, No. 1 system hydraulic driven (NHA 849140-101) *(see fig. 122)*.	1	
	850932-103		. ALTERNATOR INSTL, No. 2 system hydraulic driven (NHA 849140-101) *(see fig. 122)*	1	
-20	763195-501		. SEAL INSTL, hydraulic access door (NHA 849140-101) *(see fig. 130)* . .	1	
-21	767579-127		. DOOR INSTL, fus sta 520 to 579 (NHA 849140-101) *(see fig. 129)* . . .	1	6701-6815
	767579-141		. DOOR INSTL, fus sta 520 to 579 (NHA 849140-101) *(see fig. 129)* . . .	1	6816-
-22	762391-3		. PROP INSTL, hydraulic access door (NHA 849140-101) *(see fig. 129)* . .	1	

A - Removed per AA.1F-104S-OT-138
B - Reqd per AA.1F-104S-OT-138
C - Only per partial incorporation of SPU system

Fuselage Hydraulics

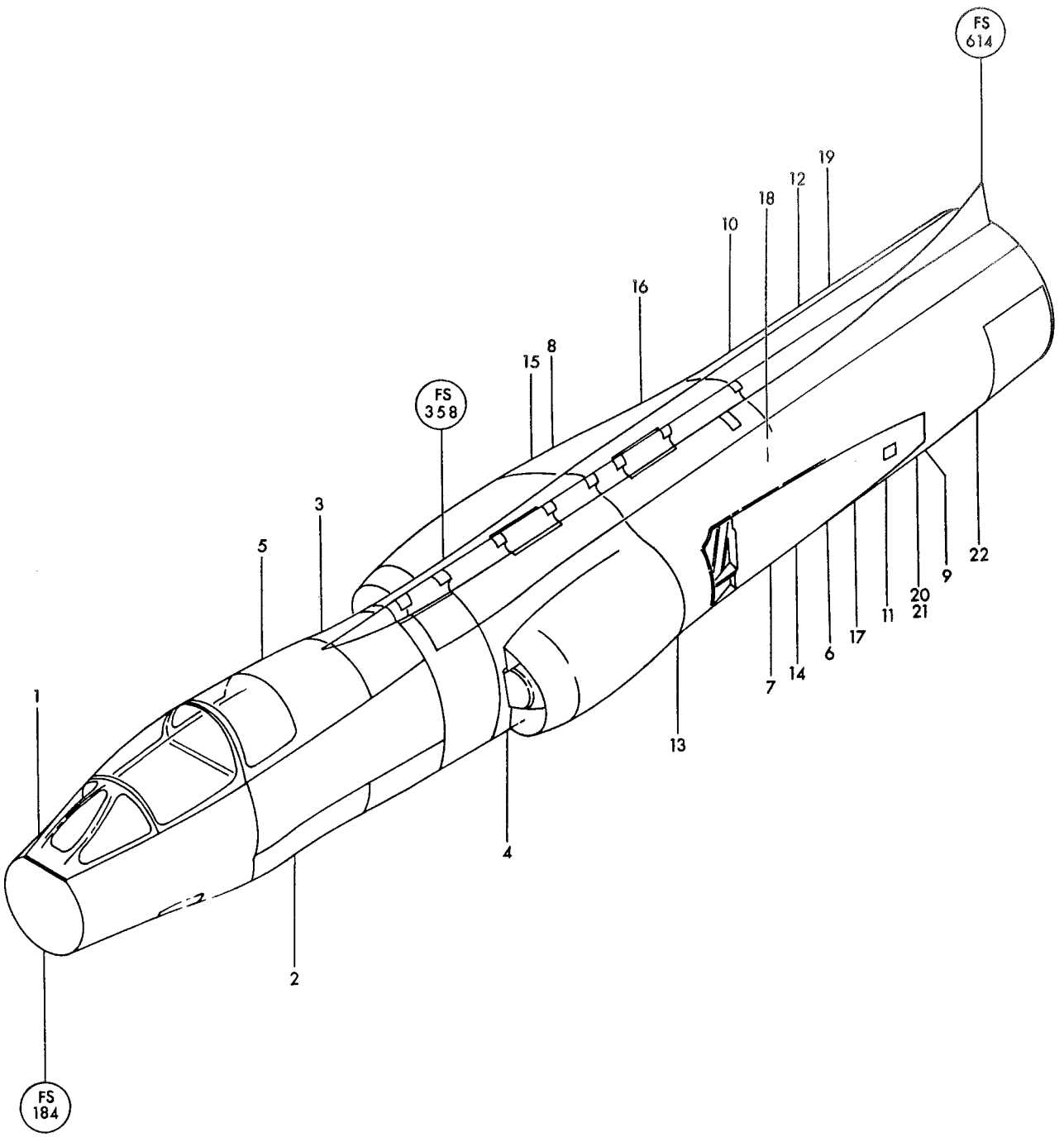

Figure 114— Fuselage Station 184 to 614 Hydraulic Piping and Equipment Complete

Figura e particolare	NDR	1 2 3 4 5 6 7 DENOMINAZIONE	Quant.	Codice applicab.
		BRAKE RESERVOIR, VALVES AND PIPING FUSELAGE STATION 184 TO 255		
115	784004-3	PLUMBING INSTL, cockpit brake *(see fig. 30 for reqd)*	REF	
-1	TA4C69S4T	CLAMP, loop type (84971)	4	
	AN520-10R10	SCREW (88044)	2	
	LS607-5	SPACER, phenolic (36659)	2	
	MS21042L3	NUT (96906)	2	
-2	784965-7	TUBE ASSY, normal brake left	1	
-3	784965-3	TUBE ASSY, normal brake right	1	
-4	784965-11	TUBE ASSY, No. 2 system hydraulic return	1	
-5	784965-27	TUBE ASSY, No. 2 system hydraulic pressure	1	
-6	MS21907D4	ELBOW (96906)	4	
-7	AN960D716	WASHER (88044)	4	
-8	AN924-4D	NUT (88044)	4	
-9	MS21908D4	ELBOW (96906)	3	
-10	LS4764-4	RING, teflon hydraulic backup (36659)	3	
-11	AN6289D4	NUT (88044)	3	
-12	784965-37	TUBE ASSY, No. 2 system hydraulic pressure	2	
-13	784965-39	TUBE ASSY, No. 2 system hydraulic pressure	2	
-14	784965-13	TUBE ASSY, No. 2 system hydraulic return	1	
-15	784965-15	TUBE ASSY, No. 2 system hydraulic return	1	
-16	MS21902D4	UNION (96906)	5	
-17	MS21912D4	TEE (96906)	1	
-18	LS4764-4	RING, teflon hydraulic backup (36659)	1	
-19	AN6289D4	NUT (88044)	1	
-20	MS21908D4	ELBOW (96906)	2	
-21	LS4764-4	RING, teflon hydraulic backup (36659)	2	
-22	AN6289D4	NUT (88044)	2	
-23	MS21902D4	UNION (96906)	2	
-24	4CV441	VALVE, hydraulic check (A2898) (26044) (Lockheed spec dwg 668052) (see T.O. 9H8-6-74-4)	2	
		Partial Breakdown Follows		
	LS4634-4	GASKET, boss straight thread tube fitting (36659) (whn exh use NAS1596-4)	1	
	NAS1596-4	PACKING (80205) (use LS4634-4 until exh)	REF	
	4CVS11	SPRING, hydraulic check valve (26044)	1	
	4CVP11	POPPET, hydraulic check valve (26044)	1	
-25	785464-1	MANIFOLD, power brake hydraulic	1	
		Attaching Parts		
-26	NAS1103-14	BOLT (80205)	4	
		*		
-27	2574A1	RESERVOIR, hydraulic brake manual system (02750) (Lockheed spec dwg 668431-1) (see T.O. 9H5-3-36-3)	1	
		Attaching Parts		
-28	NAS1096-3-6	SCREW (80205)	3	
		*		
-29	AN814-4DL	PLUG (88044)	8	
-30	AN6290-4	GASKET (88044)	23	
	783129-3	VALVE INSTL, rudder pedal brake *(see fig. 63 for reqd)*	REF	
-31	516250	VALVE, power or manual operating brake (A0809) (00502) (Lockheed spec dwg 662129-9) (see T.O. 9H8-30-30-4) *(see fig. 64)*	2	
		Attaching Parts		
-32	NAS1104-26	BOLT (80205)	4	
	AN960D416	WASHER (under head) (88044)	4	
		*		
	784004-1	PLUMBING INSTL, cockpit brake *(see fig. 114 for reqd)*	REF	
-33	AN742-5	CLAMP (88044)	8	
	AN520-10R14	SCREW (88044)	4	
	LS607-8	SPACER, phenolic (36659)	4	
-34	785351-1	CLAMPBLOCK, cockpit plumbing power brake (match comp do not stk sep)	3	

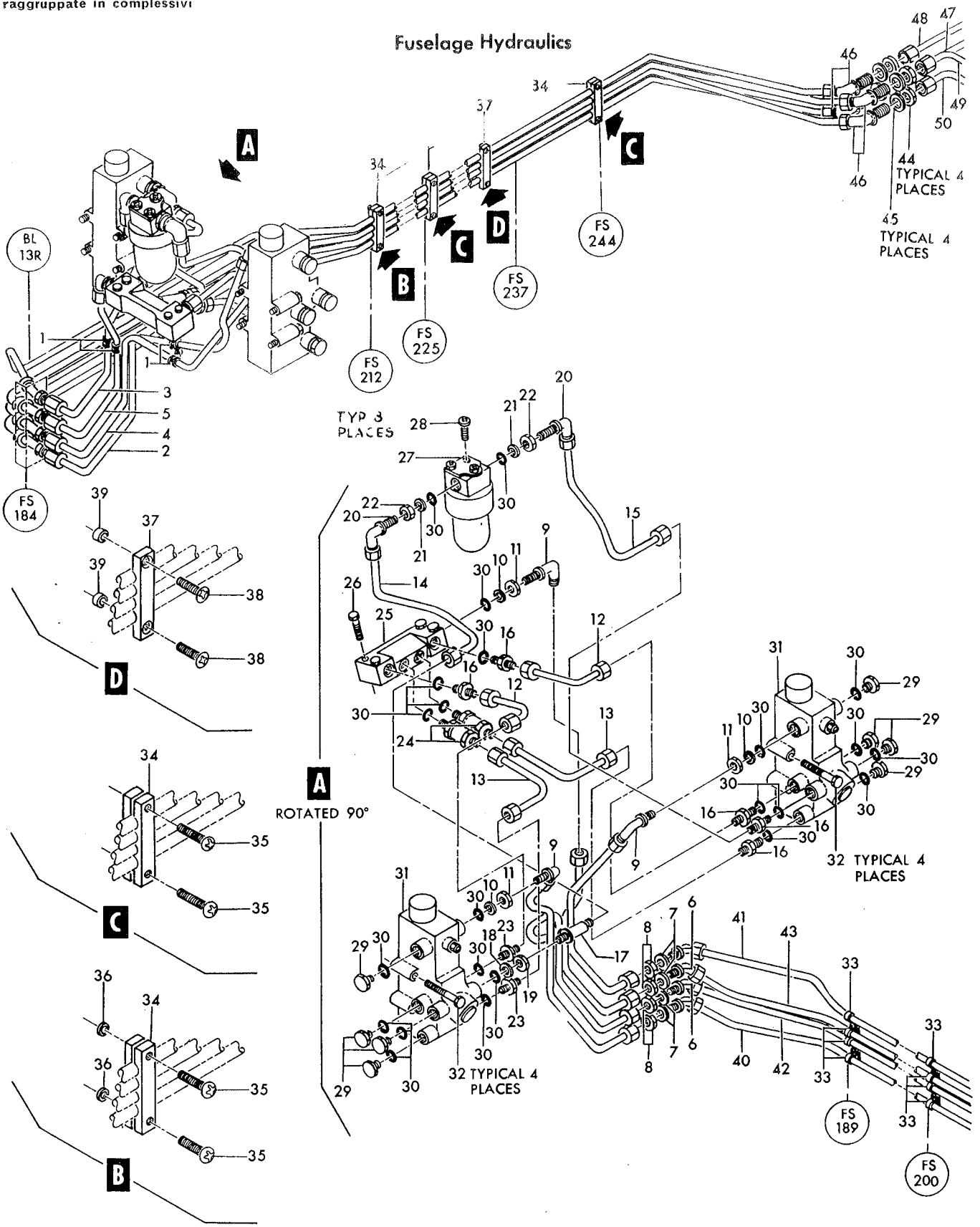

Figure 115—Brake Reservoir, Valves and Piping Fuselage Station 184 to 255

Figura e particolare	NDR	1 2 3 4 5 6 7 DENOMINAZIONE	Quant.	Codice applicab.
		Attaching Parts		
115-35	AN520-10R18	SCREW (88044)	2	
-36	LS607-4	SPACER, phenolic (36659)	2	
-37	787010-1	CLAMPBLOCK, cockpit plumbing power brake (match comp do not stk sep)	1	
		Attaching Parts		
-38	AN507-1032R12	SCREW (88044)	2	
-39	NAS43DD3-10	SPACER (80205)	2	
-40	784965-5	TUBE ASSY, normal brake left *(see fig. 116)*	1	
-41	784965-1	TUBE ASSY, normal brake right *(see fig. 116)*	1	
-42	784965-9	TUBE ASSY, No. 2 system hydraulic return *(see fig. 116)*	1	
-43	784965-17	TUBE ASSY, No. 2 system hydraulic pressure *(see fig. 116)*	1	
-44	AN924-4D	NUT (88044)	4	
-45	AN960D716	WASHER (88044)	4	
-46	MS21907D4	ELBOW (96906)	4	
-47	762453-47	TUBE ASSY, normal brake left *(see fig. 116 for reqd)*	REF	
-48	762453-49	TUBE ASSY, normal brake right *(see fig. 116 for reqd)*	REF	
-49	784850-17	TUBE ASSY, system No. 2 hydraulic pressure *(see fig. 116 for reqd)*	REF	
-50	784850-25	TUBE ASSY, system No. 2 hydraulic return *(see fig. 116 for reqd)*	REF	

Figura e particolare	NDR	1 2 3 4 5 6 7 DENOMINAZIONE	Quant.	Codice applicab.
		NOSE WEEL WELL PIPING AND EQUIPMENT FUSELAGE STATION 255 TO 305		
116	789425-1	. PLUMBING INSTL, nose landing gear *(see fig. 232 for reqd)*	REF	
- 1	773471-37	. . TUBE ASSY, hydraulic steering return	1	
- 2	773471-35	. . TUBE ASSY, hydraulic steering pressure	1	
- 3	728071-1	. . VALVE, hydraulic bleeder	2	
- 4	728072-1	. . FITTING, hydraulic bleeder	2	
- 5	MS21907D4	. . ELBOW (96906)	1	
- 6	MS21908D4	. . ELBOW (96906)	1	
- 7	MS21914-4	. . CAP (96906)	2	
- 8	AN6290-4	. . GASKET (88044)	2	
- 9	LS4764-4	. . RING, teflon hydraulic backup (36659)	2	
- 10	AN6289D4	. . NUT (88044)	2	
- 11	AN924-4D	. . NUT (88044)	2	
- 13	MS21042L3	. . NUT (96906)	2	
- 14	762574	. . U-BOLT, nose wheel well bracket	1	
- 15	762458	. . BRACKET, nose wheel well	1	
	789425-101	. PLUMBING INSTL, nose wheel well *(see fig. 114 for reqd)*	REF	
- 16	762453-47	. . TUBE ASSY, normal brake left *(see fig. 115 and 117)*	1	
- 17	762453-49	. . TUBE ASSY, normal brake right *(see fig. 115 and 117)*	1	
- 18	784850-3	. . TUBE ASSY, hydraulic steering pressure	1	
- 19	784850-13	. . TUBE ASSY, system No. 2 hydraulic pressure	1	
- 20	784850-15	. . TUBE ASSY, system No. 2 hydraulic pressure	1	
- 21	784850-17	. . TUBE ASSY, system No. 2 hydraulic pressure *(see fig. 115)*	1	
- 22	784927-39	. . TUBE ASSY, hydraulic steering pressure	1	
- 23	784850-31	. . TUBE ASSY, system No. 2 hydraulic return	1	
- 24	784927-51	. . TUBE ASSY, system No. 2 hydraulic return	1	
- 25	784927-55	. . TUBE ASSY, system No. 2 hydraulic return	1	
- 27	784927-59	. . TUBE ASSY, hydraulic steering pressure	1	
- 28	784927-61	. . TUBE ASSY, system No. 2 hydraulic pressure *(see fig. 117)*	1	
- 31	784927-67	. . TUBE ASSY, hydraulic system pressure	1	
- 32	784927-69	. . TUBE ASSY, landing gear uplock locked	1	
- 33	784927-71	. . TUBE ASSY, landing gear uplock unlocked	1	
- 34	784927-83	. . TUBE ASSY system No. 2 hydraulic return	1	
- 35	784927-85	. . TUBE ASSY, hydraulic system pressure	1	
- 36	784927-87	. . TUBE ASSY, landing gear uplock locked	1	
- 37	784850-27	. . TUBE ASSY, system No. 2 hydraulic return	1	
- 38	784850-29	. . TUBE ASSY, system No. 2 hydraulic return	1	
- 39	784850-25	. . TUBE ASSY, system No. 2 hydraulic return *(see fig. 115)*	1	
- 40	ER6271-4-0201	. . HOSE ASSY, medium pressure flareless fitting (79470)	2	
- 41	R295800-4-0210	. . HOSE ASSY, hydraulic (50599)	1	
- 42	R295800-4-0220	. . HOSE ASSY, hydraulic (50599)	1	
- 43	4CV441	. . VALVE, hydraulic check (A2898) (26044) (Lockheed spec dwg 668052) (see T.O. 9H8-6-74-4)	2	
		Partial Breakdown Follows		
	LS4634-4	. . . GASKET, boss straight thread tube fitting (36659) (whn exh use NAS1596-4)	1	
	NAS1596-4	. . . PACKING (80205) (use LS4634-4 until exh)	REF	
	4CVS11	. . . SPRING, hydraulic check valve (26044)	1	
	4CVP11	. . . POPPET, hydraulic check valve (26044)	1	
- 44	2R1442-3-30	. . VALVE, hydraulic system restrictor (A2898) (26044) (Lockheed spec dwg 668066)	1	
	2RH441	. . . HOUSING, hydraulic restrictor valve (26044)	2	
	16-104	. . . FITTING, hydraulic restrictor valve (26044)	1	
	37092	. . . FILTER, hydraulic restrictor valve (81321)	2	
	LS4634-5	. . . GASKET, boss straight thread tube fitting (36659) (whn exh use NAS1596-5)	2	
	NAS1596-5	. . . PACKING (80205) (use LS4634-5 until exh)	REF	
	NP7	. . . NAMEPLATE, hydraulic restrictor valve (91207)	1	
- 45	0-7309	. . REGULATOR, constant flow liquid (A0359) (alternate to 9900-35) (see AA9-0/7309-4)	1	

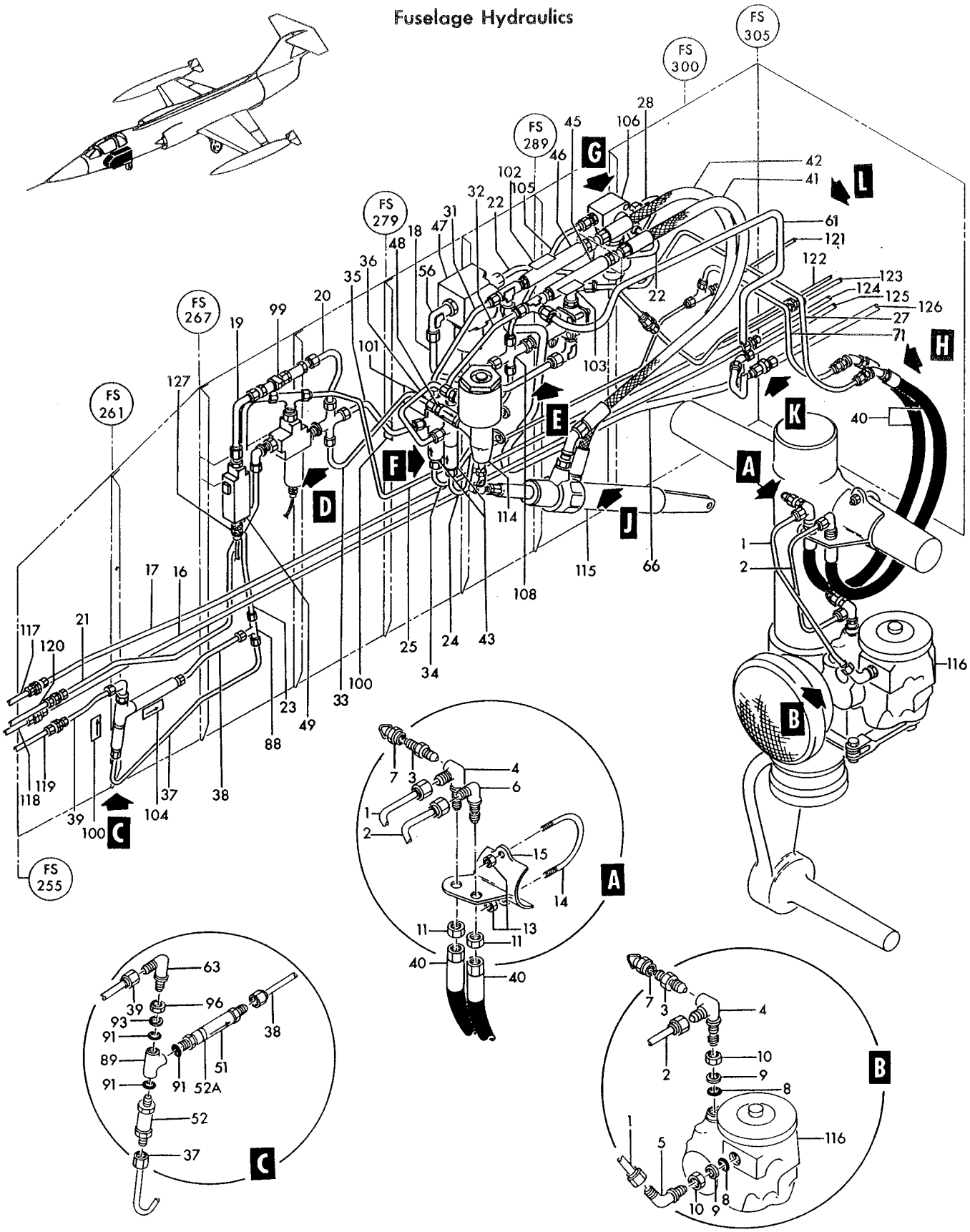

Figure 116— Nose Wheel Well Piping and Equipment Fuselage Station 255 to 305 (Sheet 1 of 3)

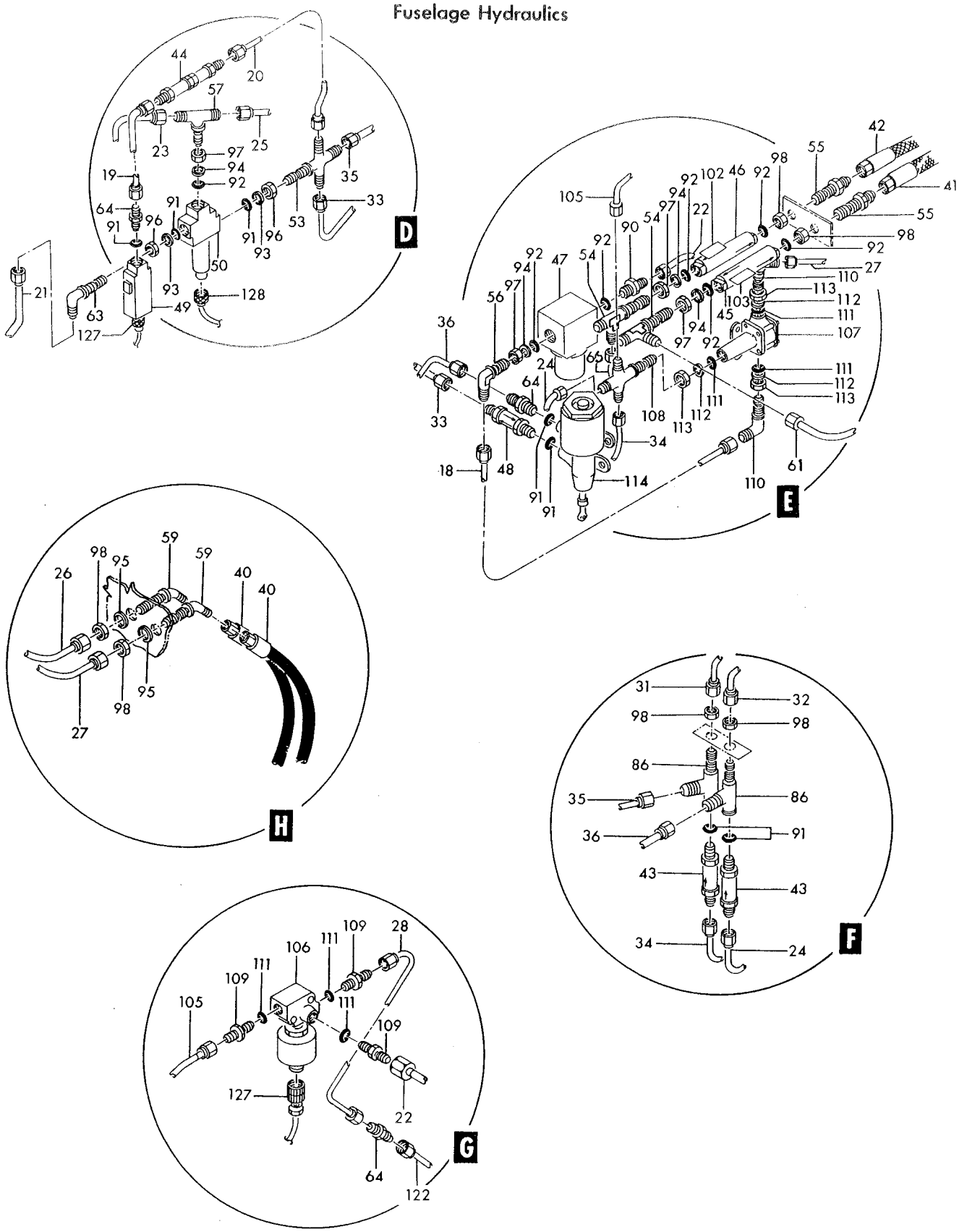

Figure 116— Nose Wheel Well Piping and Equipment Fuselage Station 255 to 305 (Sheet 2 of 3)

Fuselage Hydraulics

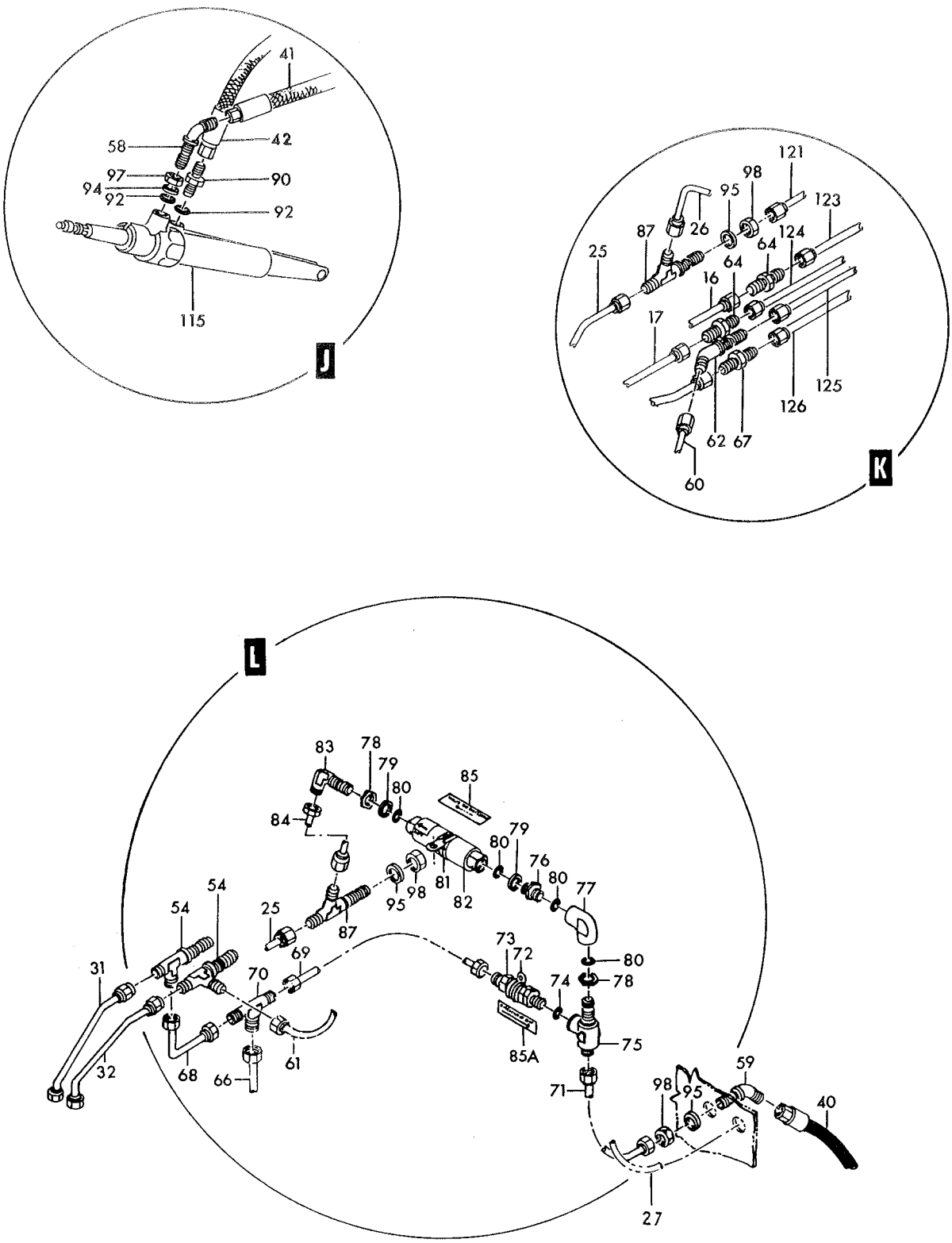

Figure 116— Nose Wheel Well Piping and Equipment Fuselage Station 255 to 305 (Sheet 3 of 3)

Figura e particolare	NDR	1 2 3 4 5 6 7	DENOMINAZIONE	Quant.	Codice applicab.
116	9900-35	. .	REGULATOR, constant flow liquid (99643) (Lockheed spec dwg 668138-19) (alterate to 0-7309)	REF	
- 46	0-7319	. .	VALVE, regulator (A0359) (see AA9-0/7319-4) (alternate to 9500-40) .	1	
	9500-40	. .	VALVE, regulator (99643) (Lockheed spec dwg 668255-13) (see T.O. 9H8-3-82-3) (alternate to 0-7319)	REF	
- 47	AC1000-6	. .	FILTER ASSY, hydraulic oil (A0303) (01414) (Lockheed spec dwg 668283-1) (61429 is an alternate) (see T.O. 9H3-3-44-3)	1	
	61429	. .	FILTER ASSY, hydraulic oil (81321) (Lockheed spec dwg 668283-1) (alternate for AC1000-6) (see separate LR when available) . . .	REF	
			Attaching Parts		
	NAS623-4-30	. .	SCREW (80205)	2	
	LS608-24	. .	SPACER, phenolic (36659)	2	
- 48	1R3449-15-25	. .	VALVE, landing gear hydraulic restrictor (A2898) (26044) (Lockheed spec dwg 668374-1)	1	
- 49	157A	. .	SWITCH, (S19) hydraulic pressure (A1620) (05087) (Lockheed spec dwg 668416-1)	1	
			Attaching Parts		
	NAS623-3-20	. .	SCREW (80205)	2	
- 50	18140-2	. .	VALVE, (L10) anti-skid brake hydraulic shutoff solenoid (A0359) (79294) (Lockheed spec dwg 668417-1) (see T.O. 4BA4-80-3)	1	
			Attaching Parts		
	NAS623-3-24	. .	SCREW (80205)	2	
- 51	4517	. .	VALVE, balanced hydraulic relief (06177) (Lockheed spec dwg 668454-1)	1	
- 52	P6-300	. .	VALVE, hydraulic check (91816) (Lockheed spec dwg 668455-1) . . .	1	
- 52A	TA4C74S19T	. .	CLAMP, loop type (84971)	1	
			Attaching Parts		
	AN520-10R8	. .	SCREW (88044)	1	
	MS21042L3	. .	NUT (96906)	1	
- 53	728528-1	. .	CROSS, No. 4 bulkhead	1	
- 54	ER804D060406	. .	TEE (79470)	2	
- 55	ER832D0406	. .	UNION (79470)	2	
- 56	ER833D0604	. .	ELBOW (79470)	1	
- 57	ER834D040406	. .	TEE, bulkhead (79470)	1	
- 58	ER837D0604	. .	ELBOW (79470)	1	
- 59	MS21907D4	. .	ELBOW (96906)	2	
- 61	784850-43	. .	TUBE ASSY, landing gear up *(see fig. 117)*	1	
- 62	MS21907D6	. .	ELBOW (96906)	1	
- 63	MS21908D4	. .	ELBOW (96906)	2	
- 64	MS21902D4	. .	UNION (96906)	5	
- 66	784850-35	. .	TUBE ASSY, landing gear down *(see fig. 117)*	1	
- 67	MS21902D6	. .	UNION (96906)	1	
- 68	784850-33	. .	TUBE ASSY, landing gear down	1	
- 69	784850-37	. .	TUBE ASSY, system No. 2 hydraulic pressure	1	
- 70	ER824D060406	. .	TEE, reducing (79470)	1	
- 71	784850-41	. .	TUBE ASSY, hydraulic steering return *(see fig. 117)*	1	
- 72	TA4C69S12T	. .	CLAMP, loop type (84971)	1	
			Attaching Parts		
	AN520-10R10	. .	SCREW (88044)	1	
	LS607-6	. .	SPACER, phenolic (36659)	1	
- 73	3R1444-1	. .	VALVE, hydraulic system restrictor (A2898) (26044) (Lockheed spec dwg 670106-1) (see T.O. 9H8-8-30-3)	1	
- 74	MS28778-4	. .	GASKET (96906)	1	
- 75	MS21910D4	. .	TEE (96906)	1	
- 76	MS21902D4	. .	UNION (96906)	1	
- 77	AN939D4	. .	ELBOW (88044)	1	
- 78	AN6289D4	. .	NUT (88044)	2	

Figura e particolare	NDR	1 2 3 4 5 6 7 DENOMINAZIONE	Quant.	Codice applicab.
116- 79	LS4764-4	RING, teflon hydraulic backup (36659)	2	
- 80	MS28778-4	GASKET (96906)	4	
- 81	TA4C69S16T	CLAMP, loop type (84971)	1	
		Attaching Parts		
	AN520-10R8	SCREW (88044)	1	
	LS607-5	SPACER, phenolic (36659)	1	
	MS21042L3	NUT (96906)	1	
- 82	A62122	VALVE, hydraulic balanced relief (A0303) (00502) (Lockheed spec dwg 670105-1) (see T.O. 9H8-2-157-3)	1	
- 83	MS21908D4	ELBOW (96906)	1	
- 84	784850-39	TUBE ASSY, system No. 2 hydraulic return	1	
- 85	771666-1	DECAL, direction of flow	1	
- 85A	771665-1	DECAL, direction of flow	1	
- 86	MS21911D4	TEE (96906)	2	
- 87	MS21912D4	TEE (96906)	1	
- 88	MS21905D4	TEE (96906)	1	
- 89	AN938D4	TEE (88044)	1	
- 90	MS21916D6-4	REDUCER (96906)	2	
- 91	AN6290-4	GASKET (88044)	10	
- 92	AN6290-6	GASKET (88044)	9	
- 93	LS4764-4	RING, teflon hydraulic backup (36659)	3	
- 94	LS4764-6	RING, teflon hydraulic backup (36659)	5	
- 95	AN960D716	WASHER (88044)	3	
- 96	AN6289D4	NUT (88044)	3	
- 97	AN6289D6	NUT (88044)	5	
- 98	AN924-4D	NUT (88044)	7	
- 99	TA4C69S12T	CLAMP, loop type (84971)	1	
		Attaching Parts		
	AN520-10R8	SCREW (88044)	1	
	LS607-6	SPACER, phenolic (36659)	1	
	MS21042L3	NUT (96906)	1	
-100	771668-1	DECAL, hydraulic system free flow	2	
-101	771669-1	DECAL, hydraulic system restricted flow	1	
-102	771671-1	DECAL, hydraulic system regulated flow	1	
-103	771675-1	DECAL, hydraulic system regulated flow	1	
-104	771665-1	DECAL, hydraulic system direction of flow	1	
	789425-11	PANEL ASSY, nose wheel well	1	
-105	784927-53	. TUBE ASSY, system No. 2 hydraulic return	1	
-106	141965	. VALVE, (L9) hydraulic shutoff (79318) (Lockheed spec dwg 668060-3) (see T.O. 9H8-4-86-3)	1	
		Attaching Parts		
	NAS623-3-24	. SCREW (80205)	2	
	LS607-14	. SPACER, phenolic (36659)	2	
-107	1008970-4	. VALVE, hydraulic pressure reducer (A1384) (77068) (Lockheed spec dwg 670107-1) (see T.O. 9H8-15-23-13)	1	
		Attaching Parts		
	NAS623-3-2	. SCREW (80205)	2	
-108	728528-1	. CROSS, No. 4 bulkhead	1	
-109	MS21902D4	. UNION (96906)	3	
-110	MS21908D4	. ELBOW (96906)	2	
-111	AN6290-4	. GASKET (88044)	6	
-112	LS4764-4	. RING, teflon hydraulic backup (36659)	3	
-113	AN6289-4	. NUT (88044)	3	
-114	766926-1	CYLINDER ASSY, NLG uplock (see T.O. 9H2-3-41-3) *(see fig. 232 for reqd)*	REF	
-115	771179-1	CYLINDER ASSY, NLG actuating (see T.O. 9H2-2-36-23) *(see fig. 232 for reqd)*	REF	

Figura e particolare	NDR	1 2 3 4 5 6 7 DENOMINAZIONE	Quant.	Codice applicab.
116-116	8156-5	STEER DAMPER ASSY, NLG (81400) (Lockheed spec dwg 668457-1) (see T.O. 4SA3-5-14) *(see fig. 232 for reqd)*	REF	
-117	784965-5	TUBE ASSY, normal brake left *(see fig. 115 for reqd)*	REF	
-118	784965-1	TUBE ASSY, normal brake right *(see fig. 115 for reqd)*	REF	
-119	784965-9	TUBE ASSY, system No. 2 hydraulic return *(see fig. 115 for reqd)*	REF	
-120	784965-17	TUBE ASSY, system No. 2 hydraulic pressure *(see fig. 115 for reqd)*	REF	
-121	784927-47	TUBE ASSY, system No. 2 hydraulic return *(see fig. 117 for reqd)*	REF	
-122	784927-45	TUBE ASSY, system No. 2 hydraulic pressure *(see fig. 117 for reqd)*	REF	
-123	763392-3	TUBE ASSY, normal brake left *(see fig. 117 for reqd)*	REF	
-124	763392-4	TUBE ASSY, normal brake right *(see fig. 117 for reqd)*	REF	
-125	763392-5	TUBE ASSY, landing gear up *(see fig. 117 for reqd)*	REF	
-126	763392-6	TUBE ASSY, landing gear down *(see fig. 117 for reqd)*	REF	
	849657-101	HARNESS ASSY, nose wheel well disconnect *(see fig. 187 for reqd)*	REF	
-127	MS25183-12S3S	. CONNECTOR, plug (steering shutoff valve and anti-skid pressure switch) (96906)	2	
-128	CA3106ER10SL4S	. CONNECTOR, (P6) plug (powar brake shutoff valve) (71468)	1	

Figura e particolare	NDR	DENOMINAZIONE 1 2 3 4 5 6 7	Quant.	Codice applicab.
		FUSELAGE STATION 305 TO 422 PLUMBING INSTALLATIONS		
117	784006-1	. PLUMBING INSTL, fus sta 305 to 335 ram air turbine *(see fig. 114 for reqd)*	REF	
- 1	784927-47	. . TUBE ASSY, system No. 2 hydraulic return *(see fig. 116)*	1	
- 2	784927-45	. . TUBE ASSY, system No. 2 hydraulic pressure *(see fig. 116)*	1	
- 3	763392-3	. . TUBE ASSY, normal brake left *(see fig. 116)*	1	
- 4	763392-4	. . TUBE ASSY, normal brake right *(see fig. 116)*	1	
- 5	763392-5	. . TUBE ASSY, landing gear up *(see fig. 116)*	1	
- 6	763392-6	. . TUBE ASSY, landing gear down *(see fig. 116)*	1	
- 7	MS21902D4	. . UNION (96906)	2	
- 8	728553-1	. . CLAMPBLOCK ASSY, fus sta 305 (match comp do not stk sep)	1	
		Attaching Parts		
	AN520-10R16	. . SCREW (88044)	2	
- 9	NAS1096-3-22	. . SCREW (80205)	3	
	MS21042L3	. . NUT (96906)	3	
-10	TA4C69S4T	. . CLAMP, loop type (84971)	2	
		Attaching Parts		
	AN520-10R8	. . SCREW (88044)	1	
	MS21042L3	. . NUT (96906)	1	
-11	TA4C74S4T	. . CLAMP, loop type (84971)	2	
		Attaching Parts		
	AN520-10R8	. . SCREW (88044)	1	
	MS21042L3	. . NUT (96906)	1	
-12	728552-1	. . CLAMPBLOCK ASSY, fus sta 355 (match comp do not stk sep)	1	
		Attaching Parts		
	NAS623-3-6	. . SCREW (80205)	1	
-13	AN520-10R12	. . SCREW (88044)	2	
	MS21042L3	. . NUT (96906)	2	
-14	761710	. . CLAMPBLOCK ASSY, fus sta 322 ram air turbine plumbing (match comp do not stk sep)	1	
		Attaching Parts		
	AN520-10R16	. . SCREW (88044)	2	
-15	761711	. . CLAMPBLOCK ASSY, fus sta 322 ram air turbine plumbing (match comp do not stk sep)	1	
		Attaching Parts		
	AN520-10R16	. . SCREW (88044)	2	
-16	AN520-10R32	. . SCREW (88044)	2	
	MS21042L3	. . NUT (96906)	2	
-17	789185-1	. . GUARD, case stowage compartment hydraulic line	1	
		Attaching Parts		
	AN520-10R8	. . SCREW (88044)	6	
	AN960D10	. . WASHER (88044)	6	
	851206-101	. PLUMBING INSTL, fus sta 335 to 422 *(see fig. 114 for reqd)*	REF	
-18	MS21902D6	. . UNION (96906)	2	
-19	726183-3	. . CLAMPBLOCK ASSY, fus sta 335 to 358 (match comp do not stk sep)	1	
		Attaching Parts		
	NAS603-12	. . SCREW (80205)	3	
-20	NAS603-18	. . SCREW (80205)	2	
-21	NAS603-26	. . SCREW (80205)	1	
	MS21042L3	. . NUT (96906)	3	
-22	784927-5	. . TUBE ASSY, landing gear down *(see fig. 120)*	1	
-23	784927-113	. . TUBE ASSY, landing gear up *(see fig. 120)*	1	
-24	784927-1	. . TUBE ASSY, normal brake left *(see fig. 118)*	1	
-25	784927-3	. . TUBE ASSY, normal brake right *(see fig. 120)*	1	

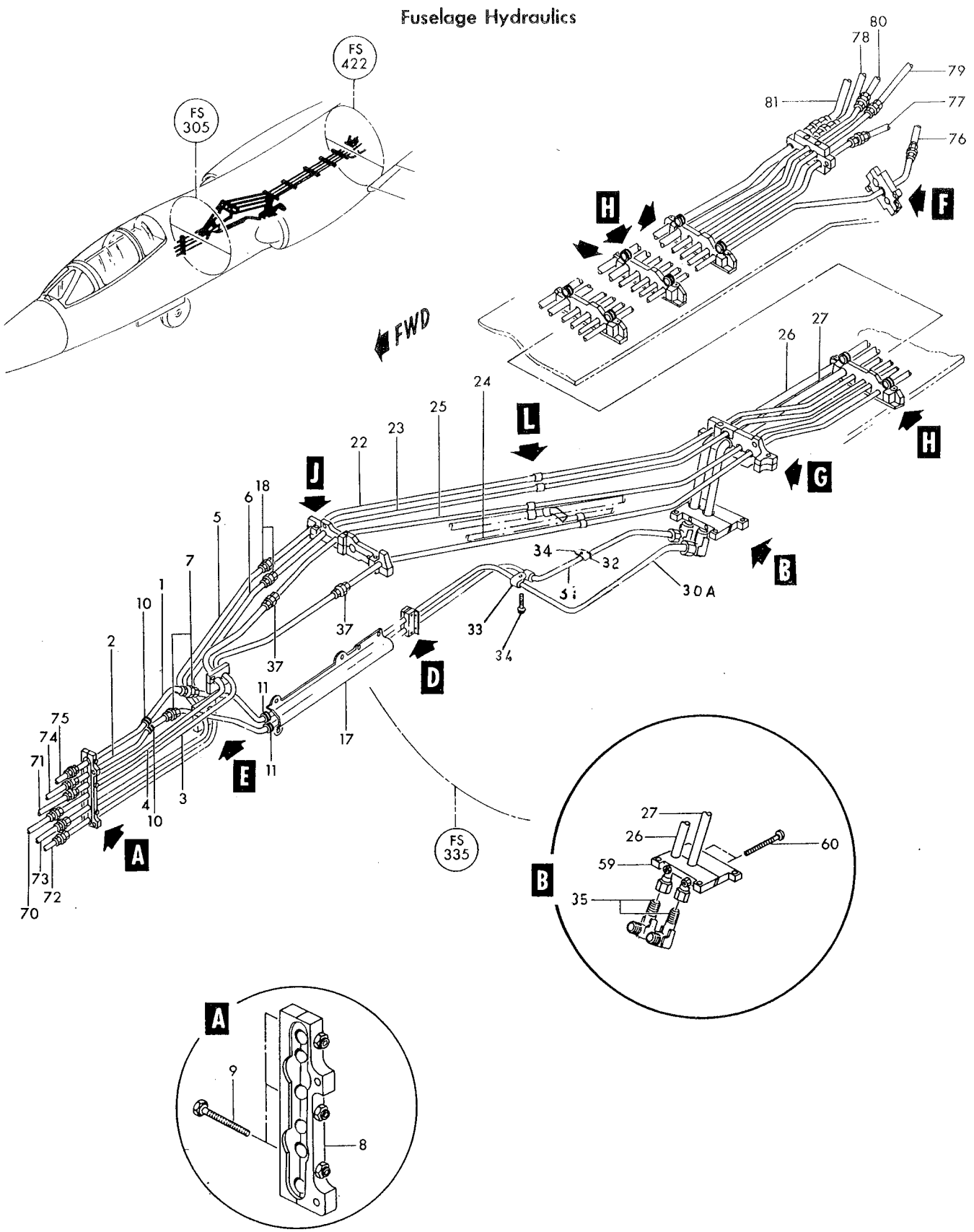

Figure 117— Fuselage Station 305 to 422 Plumbing Installations (See Text for Usage) (Sheet 1 of 2)

Fuselage Hydraulics

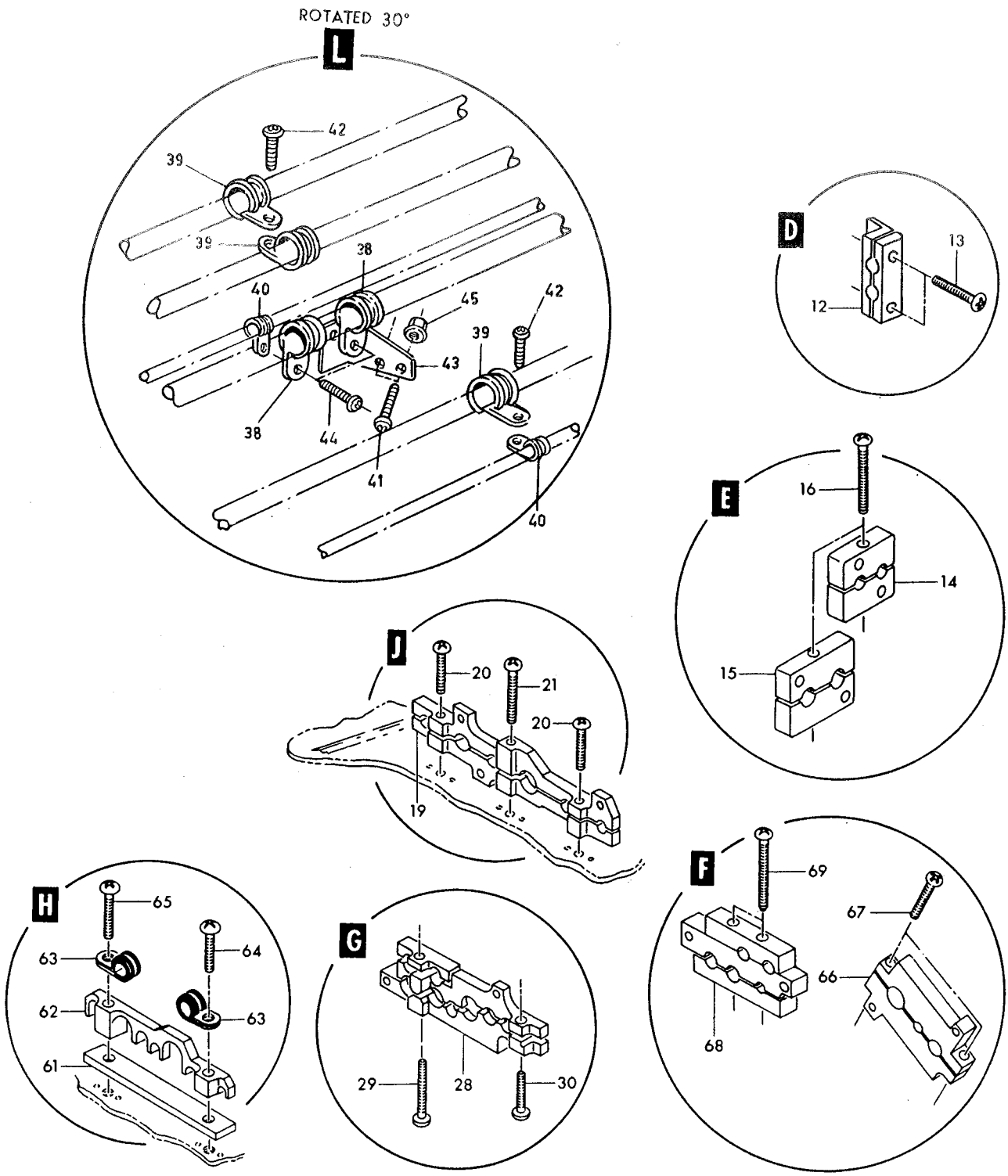

Figure 117— Fuselage Station 305 to 422 Plumbing Installations (See Text for Usage) (Sheet 2 of 2)

Figura e particolare	NDR	1 2 3 4 5 6 7 DENOMINAZIONE	Quant.	Codice applicab.
117-26	784927-115	TUBE ASSY, system No. 2 hydraulic pressure *(see fig. 120)*	1	
-27	784927-117	TUBE ASSY, system No. 2 hydraulic return *(see fig. 120)*	1	
-28	728058-1	CLAMPBLOCK ASSY, fus sta 358 (match comp do not stk sep)	1	
		Attaching Parts		
	NAS603-10	SCREW (80205)	2	
		———— ✲ ————		
-29	NAS603-28	SCREW (80205)	1	
-30	NAS603-16	SCREW (80205)	1	
	MS21042L3	NUT (96906)	2	
-30A	784927-75	TUBE ASSY, system No. 2 hydraulic pressure	1	
-31	784927-77	TUBE ASSY, system No. 2 hydraulic return	1	
-32	TA4C69S4T	CLAMP, loop type (84971)	1	
-33	TA4C69S5T	CLAMP, loop type (84971)	2	
		Attaching Parts		
-34	NAS603-8P	SCREW (80205)	2	
		———— ✲ ————		
-35	AS1004D0804	ELBOW (84970)	2	
-37	MS21902D4	UNION (96906)	2	
-38	TA4C74S10T	CLAMP, loop type (84971)	2	
-39	TA4C74S6T	CLAMP, loop type (84971)	3	
-40	TA4C74S4T	CLAMP, loop type (84971)	2	
		Attaching Parts		
-41	NAS603-8	SCREW (80205)	2	
-42	NAS603-18	SCREW (80205)	2	
	NAS43DD3-26	SPACER (80205)	1	
	NAS43DD3-28	SPACER (80205)	1	
	MS21042L3	NUT (96906)	1	
		———— ✲ ————		
-43	786439-1	CLIP ASSY	1	
		Attaching Parts		
-44	NAS603-8	SCREW (80205)	2	
-45	MS21042L08	NUT (96906)	2	
		———— ✲ ————		
-59	728061-1	CLAMPBLOCK ASSY, WL 80 (match comp do not stk sep)	1	
		Attaching Parts		
	NAS603-14	SCREW (80205)	3	
		———— ✲ ————		
-60	NAS603-44	SCREW (80205)	2	
	MS21042L3	NUT (96906)	2	
-61	779014-1	CLAMPBLOCK, fus sta 358 to 422 hydraulic tube	4	
-62	728059-1	CLAMPBLOCK, fus sta 370 to 411	4	
-63	TA4C74S6T	CLAMP, loop type (84971)	8	
-64	NAS603-18	SCREW (80205)	4	
-65	NAS603-22	SCREW (80205)	4	
-66	727356-1	CLAMPBLOCK ASSY, fus sta 422 LH (match comp do not stk sep)	1	
		Attaching Parts		
	NAS603-22	SCREW (80205)	2	
		———— ✲ ————		
-67	NAS603-22	SCREW (80205)	2	
	MS21042L3	NUT (96906)	2	
-68	728060-1	CLAMPBLOCK ASSY, fus sta 422 RH (match comp do not stk sep)	1	
		Attaching Parts		
	NAS603-16	SCREW (80205)	2	
		———— ✲ ————		
-69	NAS603-32	SCREW (80205)	2	
	MS21042L3	NUT (96906)	2	
-70	762453-47	TUBE ASSY, normal brake left *(see fig. 116 for reqd)*	REF	
-71	762453-49	TUBE ASSY, normal brake right *(see fig. 116 for reqd)*	REF	
-72	784850-35	TUBE ASSY, landing gear down *(see fig. 116 for reqd)*	REF	

Figura e particolare	NDR	1	2	3	4	5	6	7	DENOMINAZIONE	Quant.	Codice applicab.
117-73	784850-43	.							TUBE ASSY, landing gear up *(see fig. 116 for reqd)*	REF	
-74	784927-61	.							TUBE ASSY, system No. 2 hydraulic pressure *(see fig. 116 for reqd)* . .	REF	
-75	784850-41	.							TUBE ASSY, system No. 2 hydraulic return *(see fig. 116 for reqd)* . . .	REF	
-76	784868-9	.							TUBE ASSY, normal brake left *(see fig. 118 for reqd)*	REF	
-77	785124-29	.							TUBE ASSY. normal brake right *(see fig. 120 for reqd)*	REF	
-78	785124-1	.							TUBE ASSY, landing gear down *(see fig. 120 for reqd)*	REF	
-79	785124-3	.							TUBE ASSY, landing gear up *(see fig. 120 for reqd)*	REF	
-80	851179-101	.							TUBE ASSY, system No. 2 hydraulic return *(see fig. 120 for reqd)* . . .	REF	
-81	851179-107	.							TUBE ASSY, system No. 2 hydraulic pressure *(see fig. 120 for reqd)* . .	REF	

Figura e particolare	NDR	1 2 3 4 5 6 7 DENOMINAZIONE	Quant.	Codice applicab.
		MAIN WHEEL WELL PIPING AND EQUIPMENT FUSELAGE STATION 422 TO 465 LEFT HAND		
118	851112-103	PLUMBING INSTL, LH main wheel well *(see 114 for reqd)*	REF	
- 1	762846-79	TUBE ASSY, landing gear up *(see fig. 119)*	1	
- 2	784868-29	TUBE ASSY, landing gear downlock locked	1	
- 3	769923-7	TUBE ASSY, landing gear door up	1	
- 4	769923-41	TUBE ASSY, landing gear downlock unlock *(see fig. 119)*	1	
- 5	MS21902D4	UNION (96906)	1	
- 6	784868-23	TUBE ASSY, normal brake left *(see fig. 119)*	1	
- 8	0-7318	REGULATOR, MLG door constant flow (A0359) (alternate to 9900-34) (see AA9-0/7318-4)	1	
	9900-34	REGULATOR, MLG door constant flow (99643) (Lockheed spec dwg 668138-17) (alternate to 0-7318)	REF	
		Attaching Parts		
	NAS603-12	SCREW (80206)	1	
	LS607-14	SPACER (36659)	1	
- 9	TA4C74S15T	CLAMP, loop type (84971)	1	
-10	MS21916D8-6	REDUCER (96906)	2	
-11	2R2463-1	VALVE, restrictor (A2898) (26044) (Lockheed spec. dwg 668433-1)	1	
-12	517-11	VALVE, (L3) anti-skid brake control (A1384) (alternate to 9541578) (see separate publication when available)	1	
	9541578	VALVE, (L3) anti-skid brake control (73842) (Lockheed spec dwg 662131-1) (see T.O. 9H8-14-241-3) (alternate to 517-11)	REF	
		Attaching Parts		
	NAS623-3-26	SCREW (80205)	2	
-13	MS21902D4	UNION (96906)	1	
-14	MS28778-4	PACKING (96906)	1	
-15	AS1006D08060604	CROSS (79470)	1	
-16	AN924-4D	NUT (88044)	2	
-17	AN960D716	WASHER (88044)	AR	
-18	727733-1	SWIVEL ASSY, MLG actuating cylinder	2	
-19	727731-1	BODY, MLG actuating cylinder swivel	1	
-20	725996	HOUSING, MLG actuating cylinder swivel	1	
-21	725995	SHAFT, MLG actuating cylinder swivel	1	
-22	LS4565-6	RING, teflon backup packing (36659)	2	
-23	AN6227B6	PACKING (88044)	2	
-24	LS4565-12	RING, teflon backup packing (36659)	1	
-25	AN6227B12	PACKING (88044)	1	
-26	AN6290-8	GASKET (88044)	1	
-27	AN924-6D	NUT (88044)	1	
-28	727734-1	SWIVEL ASSY, MLG actuating cylinder	1	
-29	727732-1	BODY, MLG actuating cylinder swivel	1	
-30	727699-1	HOUSING, MLG actuating cylinder swivel	1	
-31	725999	SHAFT, MLG actuating cylinder swivel	1	
-32	LS4565-9	RING, teflon backup packing (36659)	2	
-33	AN6227B9	PACKING (88044)	2	
-34	LS4565-16	RING, teflon backup packing (36659)	1	
-35	AN6227B16	PACKING (88044)	1	
-36	AN6290-12	GASKET (88044)	1	
-37	771674-1	DECAL, hydraulic system regulated flow	1	
-38	MS28778-6	PACKING (96906)	1	
-39	MS28778-8	PACKING (96906)	2	
	851112-105	PLUMBING INSTL, main wheel well *(see fig. 114 for reqd)*	REF	
-40	762846-21	TUBE ASSY, landing gear door uplock unlock	1	
-41	762846-22	TUBE ASSY, landing gear door uplock locked *(see fig. 120)*	1	
-42	762846-54	TUBE ASSY, landing gear up	1	
-43	762846-57	TUBE ASSY, landing gear door down	1	
-44	769923-3	TUBE ASSY, landing gear door uplock unlock *(see fig. 119)*	1	

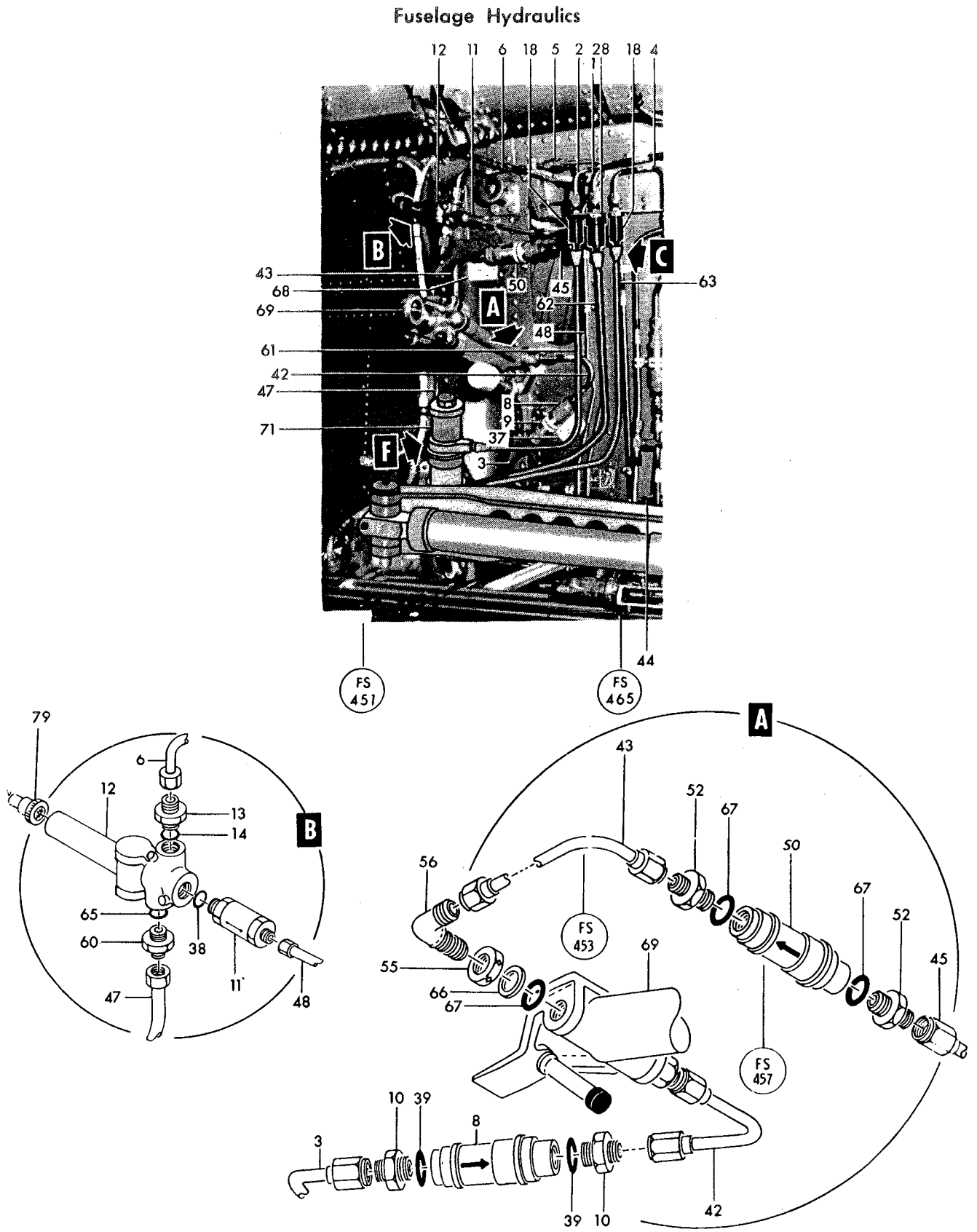

Figure 118— Main Wheel Well Piping and Equipment Fuselage Station 422 to 465 Left Hand (Sheet 1 of 3)

AA.1F-F104S-4

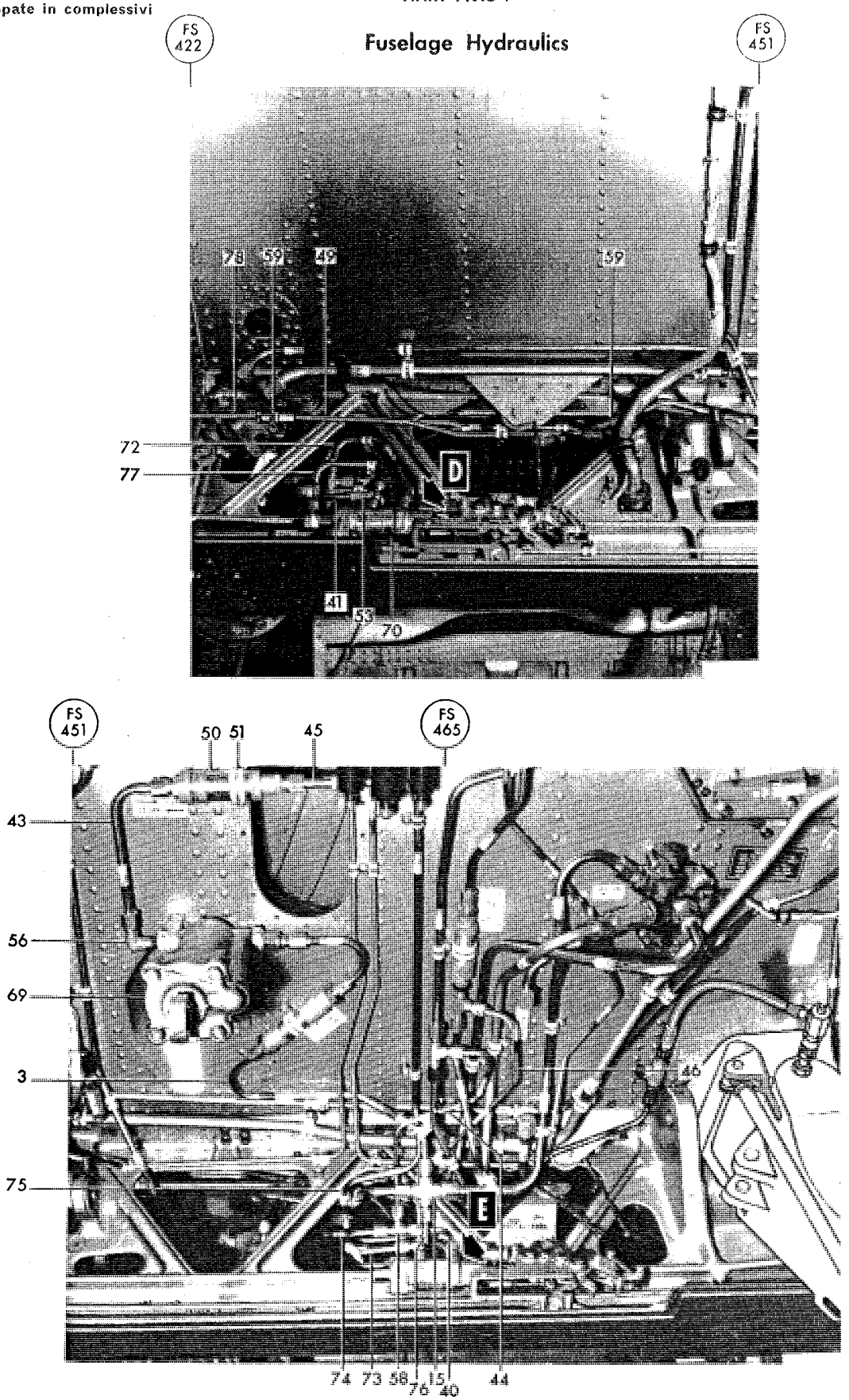

Figure 118— Main Wheel Well Piping and Equipment Fuselage Station 422 to 465 Left Hand (Sheet 2 of 3)

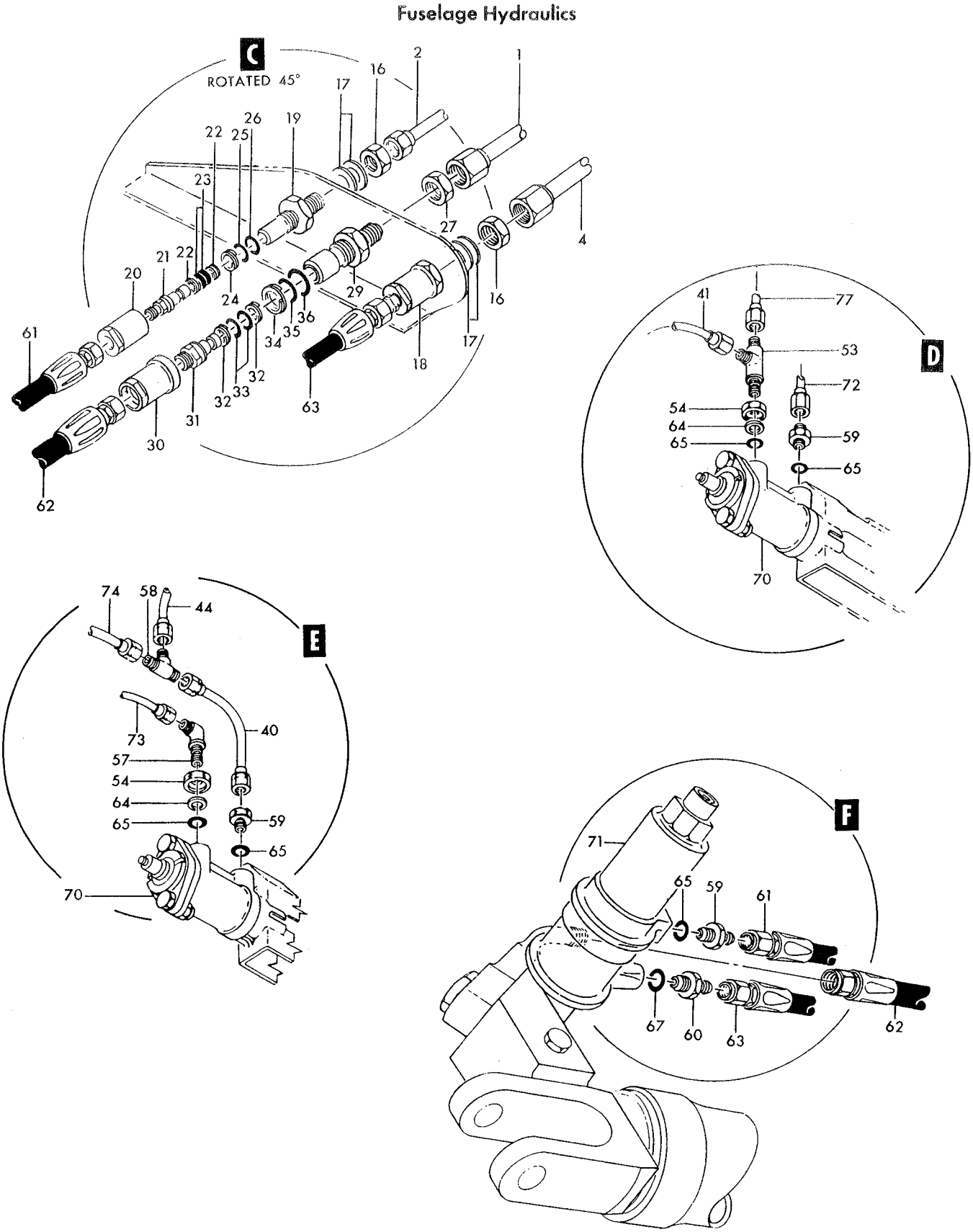

Figure 118— Main Wheel Well Piping and Equipment Fuselage Station 422 to 465 Left Hand (Sheet 3 of 3)

Figura e particolare	NDR	DENOMINAZIONE	Quant.	Codice applicab.
118-45	769923-35	TUBE ASSY, landing gear door down *(see fig. 120)*	1	
-46	769923-43	TUBE ASSY, landing gear door uplock locked *(see fig. 119 and 120)*	1	
-47	784868-21	TUBE ASSY, anti-skid return *(see fig. 120)*	1	
	TA4C69S10T	CLAMP, loop type (84971)	1	
	TA4C69S6T	CLAMP, loop type (84971)	3	
		Attaching Parts		
	NAS603-12	SCREW (80205)	2	
	NAS603-8	SCREW (80205)	1	
	MS21042L3	NUT (96906)	1	
-48	784868-25	TUBE ASSY, normal brake left	1	
-49	784868-9	TUBE ASSY, normal brake left *(see fig. 117)*	1	
-50	0-7310	VALVE, constant flow hydraulic regulator (A0359) (alternate to 9500-35) (see AA9-0/7310-4)	1	
	9500-35	VALVE, constant flow hydraulic regulator (99643) (Lockheed spec dwg 668255-11) (see T.O. 9H8-3-82-3) (alternate to 0-7310)	REF	
		Attaching Parts		
	NAS623-3-14	SCREW (80205)	1	
	LS607-5	SPACER (36659)	1	6701-6790
	LS607-3	SPACER (36659)	1	6791-
-51	TA4C74S20T	CLAMP, loop type (84971)	1	
-52	MS21902D6	UNION (96906)	2	
-53	MS21912D4	TEE, bulckhead (96906)	1	
-54	AN6289D4	NUT (88044)	2	
-55	AN6289D6	NUT (88044)	1	
-56	MS21908D6	ELBOW, bulkhead (96906)	1	
-57	MS21908D4	ELBOW, bulkhead (96906)	1	
-58	MS21905D4	TEE (96906)	1	
-59	MS21902D4	UNION (96906)	5	
-60	MS21916D6-4	REDUCER (96906)	2	
-61	BR295800-4-0186	HOSE ASSY, MLG hydraulic (50599)	1	
-62	BR295800-6-0230	HOSE ASSY, MLG hydraulic (50599)	1	
-63	BR295800-4-0240	HOSE ASSY, MLG hydraulic (50599)	1	
-64	LS4764-4	RING, teflon hydraulic backup (36659)	2	
-65	MS28778-4	PACKING (96906)	6	
-66	LS4764-6	RING, teflon hydraulic backup (36659)	1	
-67	MS28778-6	PACKING (96906)	4	
-68	771673-1	DECAL, hydraulic system regulated flow	1	
-69	788593-501	CYLINDER ASSY, MLG fwd door (see T.O. 9H2-2-36-13) *(see fig. 241 for reqd)*	REF	6701-6865
	788593-101	CYLINDER ASSY, MLG fwd door (see T.O. 9H2-2-36-13) *(see fig. 241 for reqd)*	REF	6866-
	770686-19	LATCH ASSY, MLG door LH (consists of 1 each 770686-17, 761908M, 726259-3, 2 each AN320-3 and AN380-2-2) (spares only) (see T.O. 16L1-4-7-3)	REF	
-70	770686-17	LATCH ASSY, MLG door LH (see T.O. 16L1-4-7-3) *(see fig. 242 for reqd)*	REF	
-71	849162-101	CYLINDER ASSY, MLG drag strut LH (see AA9-849162-4) *(see fig. 238 for reqd)*	REF	6701-6740
	849162-107	CYLINDER ASSY, MLG drag strut LH (see separate publication when available) *(see fig. 238 for reqd)*	REF	6741-6753
	849162-115	CYLINDER ASSY, MLG drag strut LH (see separate publication when available) *(see fig. 238 for reqd)*	REF	6754-
-72	762847-5	TUBE ASSY, landing gear door uplock unlock *(see fig. 120 for reqd)*	REF	
-73	762847-7	TUBE ASSY, landing gear door uplock locked *(see fig. 120 for reqd)*	REF	
-74	762847-8	TUBE ASSY, landing gear door uplock unlock *(see fig. 120 for reqd)*	REF	
-75	762847-45	TUBE ASSY, landing gear door up *(see fig. 120 for reqd)*	REF	
-76	770029-9	TUBE ASSY, landing gear door uplock unlock *(see fig. 120 for reqd)*	REF	
-77	770029-21	TUBE ASSY, landing gear door uplock locked *(see fig. 120 for reqd)*	REF	
-78	784927-1	TUBE ASSY, normal brake left *(see fig. 117 for reqd)*	REF	
	849602-101	HARNESS ASSY, LH MLG *(see fig. 188 for reqd)*	REF	
-79	CA3106ER10SL4S	CONNECTOR, (P6) plug (brake control valve) (71468)	1	

Figura e particolare	NDR	DENOMINAZIONE 1 2 3 4 5 6 7	Quant.	Codice applicab.
		MAIN WHEEL WELL PIPING AND EQUIPMENT FUSELAGE STATION 465 TO 489 LEFT HAND		
119	851112-103	. PLUMBING INSTL, LH main wheel well *(see fig. 114 for reqd)*	REF	
- 2	784868-31	. . TUBE ASSY, landing gear down	1	
- 3	762846-79	. . TUBE ASSY, landing gear up *(see fig. 118 for reqd)*	REF	
- 5	784868-29	. . TUBE ASSY, landing gear dowlock locked *(see fig. 118 for reqd)*	REF	
- 6	769923-41	. . TUBE ASSY, landing gear downlock unlock *(see fig. 118 for reqd)*	REF	
- 7	0-7317	. . REGULATOR, constant flow liquid (A0359) (alternate to 9900-33) (see AA9-0/7317-4)	1	
	9900-33	. . REGULATOR, constant flow liquid (99643) (Lockheed spec dwg 668138-15) (alternate to 0-7317)	REF	
- 8	TA4C74S15T	. . CLAMP, loop type (84971)	1	
- 9	AS1003D060604	. . TEE (79470)	1	
-10	AN6289D6	. . NUT (88044)	1	
-11	MS21902D6	. . UNION (96906)	1	
-12	LS4764-6	. . RING, teflon hydraulic backup (36659)	1	
-13	MS28778-6	. . PACKING (96906)	2	
	TA4C74S6T	. . CLAMP, loop type (84971)	1	
	NAS603-10	. . SCREW (80205)	1	
	LS607-4	. . SPACER (36659)	1	
	LS607-8	. . SPACER (36659)	1	
-14	1R3449-15-25	. . VALVE, landing gear hydraulic restrictor (A2898) (26044) (Lockheed spec dwg 668374-1)	1	
-15	AN924-4D	. . NUT (88044)	1	
-17	MS21910D4	. . TEE (96906)	1	
-18	MS25083-1BB3	. . JUMPER (96906)	1	
-19	AN735-4	. . CLAMP (88044)	1	
		Attaching Parts		
	NAS603-8	. . SCREW (80205)	1	
	MS21042L3	. . NUT (96906)	1	
		———— ✲ ————		
-22	723178-1	. . BUSHING, flareless	1	
-23	MS28778-4	. . PACKING (96906)	2	
-24	AN960-716L	. . WASHER (88044)	1	
-25	AS1003D060604	. . TEE (79470)	1	
-27	771669-1	. . DECAL, hydraulic system restricted flow	1	
-28	771674-1	. . DECAL, hydraulic system restricted flow	1	
	851112-105	. PLUMBING INSTL, main wheel well *(see fig. 114 for reqd)*	REF	
	784009-9	. . VALVE ASSY, LH selector	1	
-29	15020-6	. . . VALVE, (L11) main landing gear hydraulic selector solenoid (A0359) (79294) (Lockheed spec dwg 668253-7) (see T.O. 9H8-14-189-53)	1	
		Attaching Parts		
	NAS1104-22	. . . BOLT (80205)	2	
	AN960-416	. . . WASHER (88044)	2	
		———— ✲ ————		
-30	MS21902D8	. . . UNION (96906)	2	
-31	4CV483	. . . VALVE, hydraulic check (A2898) (26044) (Lockheed spec dwg 668054-3) (see T.O. 948-6-74-4)	1	
		Partial Breakdown Follows		
	LS4634-8	. . . . GASKET, boss straight thread tube fitting (36659) (whn exh use NAS1596-8)	1	
	NAS1596-8	. . . . PACKING (80205) (use LS4634-8 until exh)	REF	
	4CVS63	. . . . SPRING, hydraulic check valve (26044)	1	
	4CVP63	. . . . POPPET, hydraulic check valve (26044)	1	
-32	AN6290-8	. . . GASKET (88044)	3	
-33	AN937D8	. . . CROSS (88044)	1	
-34	AN6289D8	. . . NUT (88044)	1	
-35	MS21902D8	. . . UNION (96906)	1	
-36	MS21924D8	. . . UNION (96906)	1	
-37	MS21916D8-4	. . . REDUCER (96906)	2	

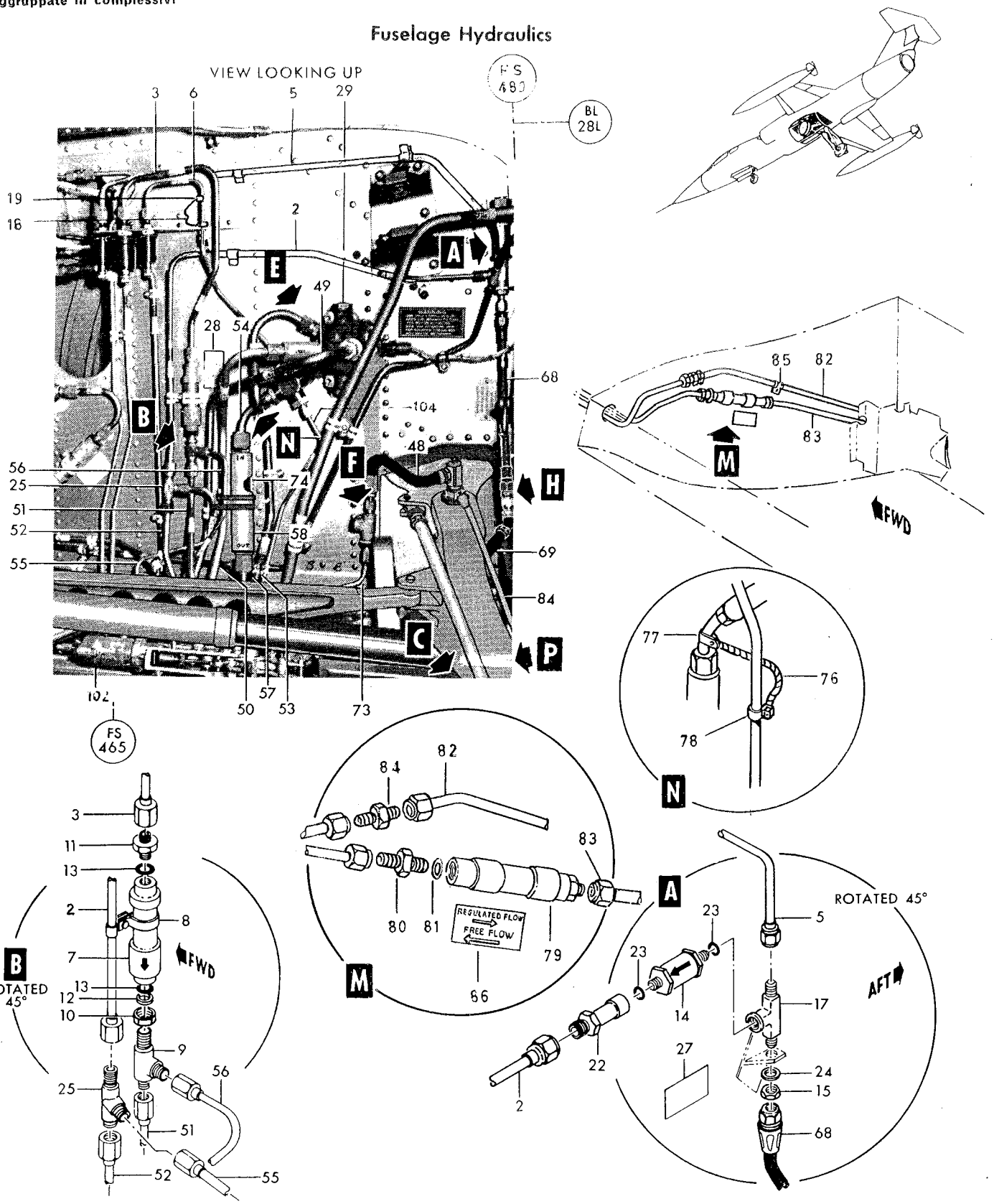

Figure 119— Main Wheel Well Piping and Equipment Fuselage Station 465 to 489 Left Hand (Sheet 1 of 3)

Fuselage Hydraulics

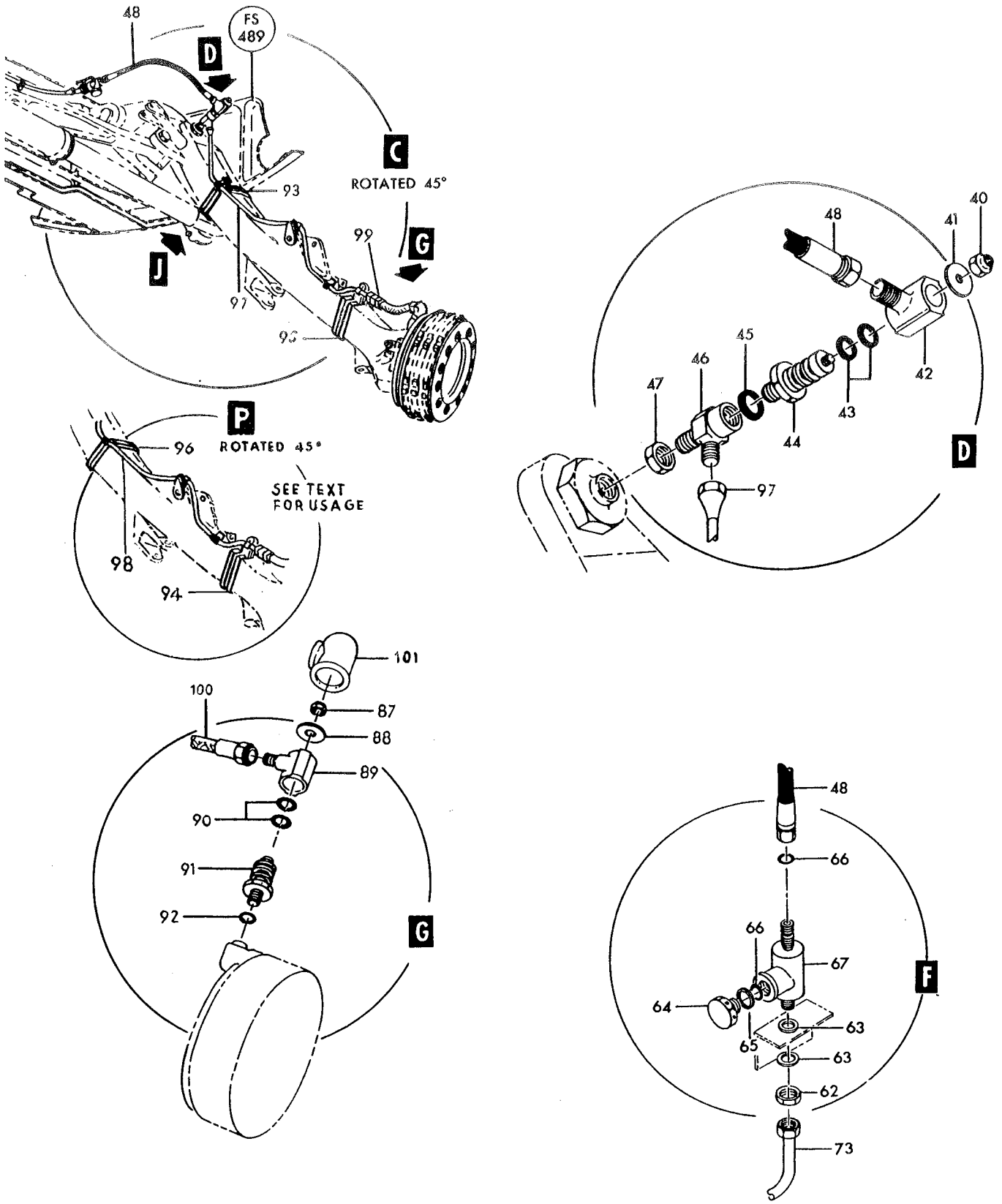

Figure 119.— Main Wheel Well Piping and Equipment Fuselage Station 465 to 489 Left Hand (Sheet 2 of 3)

Fuselage Hydraulics

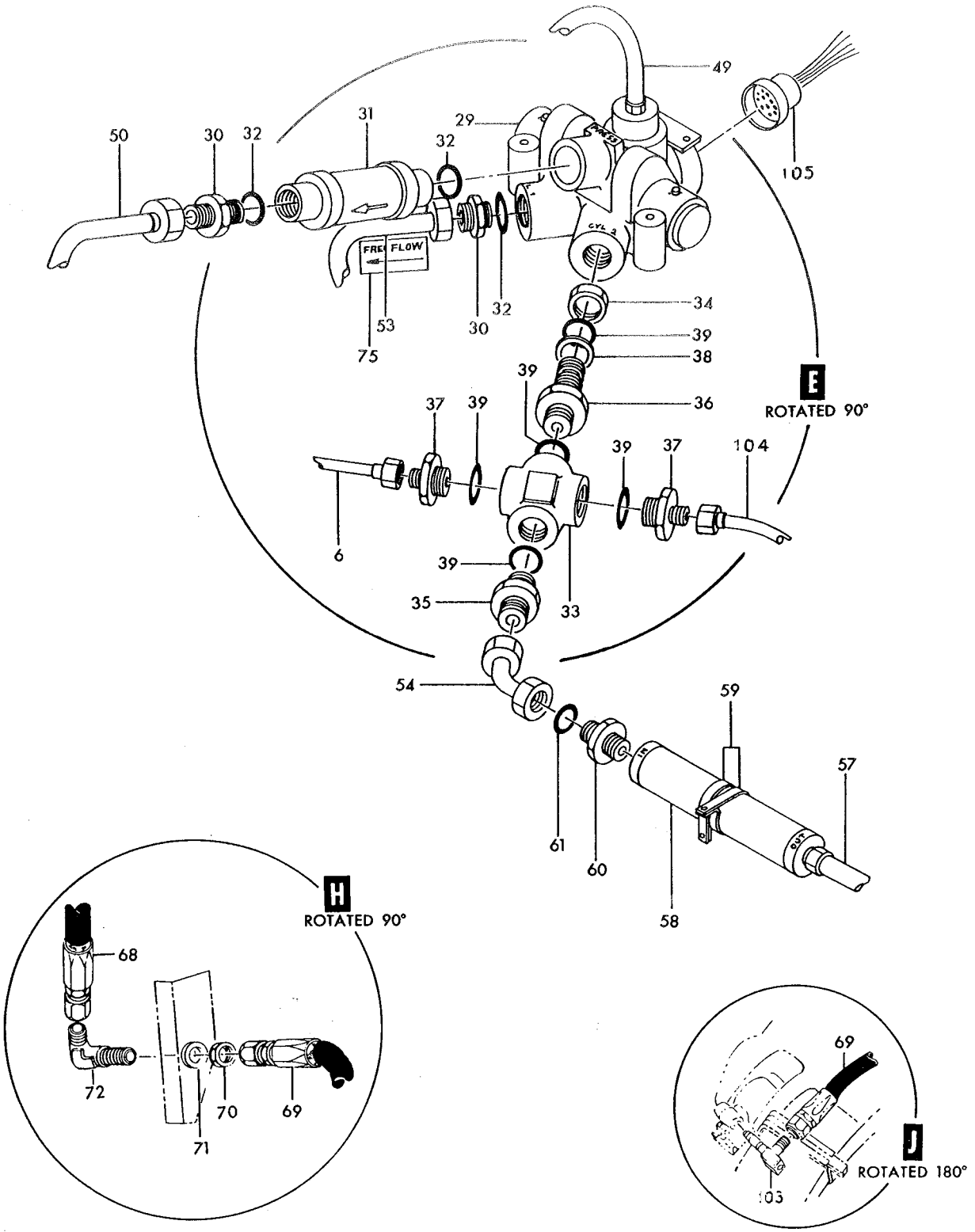

Figure 119— Main Wheel Well Piping and Equipment Fuselage Station 465 to 489 Left Hand (Sheet 3 of 3)

Figura e particolare	NDR	1	2	3	4	5	6	7	DENOMINAZIONE	Quant.	Codice applicab.
119-38	LS4764-8			.					RING, teflon hydraulic backup (36659)	1	
-39	AN6290-8			.					GASKET (88044)	5	
-40	22K1-02								NUT, self-locking cap (72962)	1	
-41	LS881-7								WASHER, plain (36659)	1	
-42	728347-1								FITTING, hydraulic swivel body	1	
-43	MS28775-110								PACKING (96906)	2	
-44	725992								BOLT, brake hydraulic swing joint	1	
-45	MS28778-4								PACKING (96906)	1	
-46	725991								FITTING, brake swing joint support	1	
-47	AN316-7R								NUT (88044)	1	
-48	034-70-06-254R1								HOSE ASSY, brake (A0355) (Alternate to 148-54500 and 750569-3)	1	
	750569-3								HOSE ASSY, brake (36659) (Alternate to 034-70-06-254R1 and 148-54500)	REF	
	148-54500								HOSE ASSY, brake (79470) (Alternate to 034-70-06-254R1 and 750569-3)	REF	
-49	762846-59								TUBE ASSY, system No. 2 hydraulic pressure *(see fig. 121)*	1	
-50	762846-61								TUBE ASSY, system No. 2 hydraulic return *(see fig. 121)*	1	
-51	762846-65								TUBE ASSY, landing gear up *(see fig. 121)*	1	
-52	769923-1								TUBE ASSY, landing gear down *(see fig. 121)*	1	
-53	769923-9								TUBE ASSY, landing gear door up	1	
-54	769923-37								TUBE ASSY, landing gear door down	1	
-55	769923-3								TUBE ASSY, landing gear door uplock unlock *(see fig. 118 for reqd)*	REF	
-56	769923-43								TUBE ASSY, landing gear door uplock locked *(see fig. 118 for reqd)*	REF	
-57	769923-39								TUBE ASSY, landing gear door down *(see fig. 121)*	1	
-58	A70153-1								VALVE, main landing gear downlock priority (A0303) (00502) (Lockheed spec dwg 668376-3) (see T.O. 9H8-26-13-13)	1	
-59	TA4C74S19T								CLAMP, loop type (84971)	2	
									Attaching Parts		
	NAS603-8								SCREW (80205)	2	
	MS21042L3								NUT (96906)	2	
									———— ✲ ————		
-60	MS21902D8								UNION (96906)	1	
-61	MS28778-8								PACKING (96906)	1	
-62	AN924-4D								NUT (88044)	1	
-63	AN960D716								WASHER (88044)	2	
-64	AN814-4DL								PLUG (88044)	1	
-65	LS4764-4								RING, teflon hydraulic backup (36659)	1	
-66	MS28778-4								PACKING (96906)	2	
-67	MS21910D4								TEE (96906)	1	
-68	R295800-4-0117								HOSE ASSY, landing gear down (50599) (129007-4SS0117 or 677034-4-0117 is an alternate)	1	
	129007-4SS0117								HOSE ASSY, landing gear down (03925) (R295800-4-0117 or 677034-4-0117 is an alternate)	REF	
	677034-4-0117								HOSE ASSY, landing gear down (00624) (alternate for R295800-4-0117 or 129007-4SS0117)	REF	
-69	BR295800-4-0144								HOSE ASSY, landing gear down (50599)	1	
-70	AN924-4D								NUT (88044)	1	
-71	AN960D716								WASHER (88044)	1	
-72	MS21908D4								ELBOW (96906)	1	
-73	784868-23								TUBE ASSY, normal brake left (NHA 851112-103) *(see fig. 118 for reqd)*	REF	
-74	771665-1								DECAL, hydraulic system direction of flow	1	
-75	771667-1								DECAL, hydraulic system free flow	1	
-76	MS25083-1BB4								JUMPER (96906)	1	
-77	AN735D8								CLAMP (88044)	1	
-78	TA4C69S8T								CLAMP, loop type (84974)	1	
									Attaching Parts		
	NAS603-8								SCREW (80205)	1	
	NAS603-10								SCREW (80205)	1	
	LS607-5								SPACER (36659)	1	
	MS21042L3								NUT (96906)	1	
									———— ✲ ————		
-79	0-7309								REGULATOR, constant flow liquid (A0359) (alternate to 9900-35) (see AA9-0/7309-4)	1	

Figura e particolare	NDR	1	2	3	4	5	6	7	DENOMINAZIONE	Quant.	Codice applicab.
119	9900-35		.	.					REGULATOR, constant flow liquid (99643) (Lockheed spec dwg 668138-19) (alternate to 0-7309)	REF	
-80	MS21916D6-4		.	.					REDUCER (96906)	1	
-81	MS28778-6		.	.					PACKING (96906)	1	
-82	784868-111		.	.					TUBE ASSY, eng aux air door open *(see fig. 120)*	1	
-83	784868-113		.	.					TUBE ASSY, eng aux air inlet door closed *(see fig. 120)* dwg 668088-101) (see T.O. 9H2-4-132-3) *(see fig. 58 for reqd)*	1 REF	6701-6866
-84	MS21902D4		.	.					UNION (96906)	1	
-85	TA4C69S14T		.	.					CLAMP, loop type (84971)	1	
	TA4C69S4T		.	.					CLAMP, loop type (84971)	1	
	NAS623-3-2		.	.					SCREW (80205)	1	
-86	771675-1		.	.					DECAL, hyd sys component regulated flow	1	
	793003-101	A.							PLUMBING INSTL, LH landing gear *(see fig. 238 for reqd)*	REF	6701-6790
	793003-103	B.							PLUMBING INSTL, LH landing gear *(see fig. 238 for reqd)*	REF	
-87	22K1-02		.	.					NUT, self-locking cap (72962)	1	
-88	LS881-7		.	.					WASHER, plain (36659)	1	
-89	728347-1		.	.					FITTING, hydraulic swivel body	1	
-90	MS28775-110		.	.					PACKING (96906)	2	
-91	725992		.	.					BOLT, brake hydraulic swing joint	1	
-92	AN6290-4		.	.					GASKET (88044)	1	
-93	762855	A.		.					CLAMP ASSY, MLG leg	1	6701-6790
-94	762855-101	B.		.					CLAMP ASSY, MLG leg	1	
-95	795783-101	A.		.					CLAMP ASSY, MLG leg	1	6701-6790
-96	852162-111	B.		.					CLAMP ASSY, MLG leg	1	
-97	784868-115	A.		.					TUBE ASSY, normal brake left	1	6701-6790
-98	784868-117	B.		.					TUBE ASSY, normal brake left	1	
-99	MS21902-4	B.		.					UNION (96906)	1	
-100	L656252-4-0066	B.		.					HOSE ASSY (00624)	1	
-101	852064-101	B.		.					COVER, hyd swivel body	1	
	770686-19		.						LATCH ASSY, MLG door LH (consists of 1 each 770686-17, 761908M, 726259-3, 2 each AN320-3 and AN380-2-2) (spares only) (see T.O. 16L1-4-7-3) *(see fig. 242 for reqd)*	REF	
-102	770686-17		.						LATCH ASSY, MLG door LH (see T.O. 16L1-4-7-3) *(see fig. 242 for reqd)*	REF	
-103	726066		.						ELBOW, MLG plumbing *(see fig. 237 for reqd)*	REF	
-104	770029-17		.						TUBE ASSY, landing gear downlock unlock *(see fig. 120 for reqd)*	REF	
	849602-101		.						HARNESS ASSY, LH MLG *(see fig. 188 for reqd)*	REF	
-105	MS25183-10SL3S		.	.					CONNECTOR, (P5) plug (landing gear door selector valve) (96906)	1	

A - Removed per AA.1F-104-OT-714A
B - Reqd per AA.1F-104-OT-714A

Figura e particolare	NDR	DENOMINAZIONE	Quant.	Codice applicab.
		MAIN WHEEL WELL PIPING AND EQUIPMENT FUSELAGE STATION 422 TO 465 RIGHT HAND		
120	851173-103	PLUMBING INSTL, main wheel well *(see fig. 114 for reqd)*	REF	
-1	762847-4	TUBE ASSY, landing gear door uplock unlock	1	
-2	762847-5	TUBE ASSY, landing gear door uplock unlock *(see fig. 118)*	1	
-3	762847-7	TUBE ASSY, landing gear door uplock locked *(see fig. 118)*	1	
-4	762847-8	TUBE ASSY, landing gear door uplock unlock *(see fig. 118)*	1	
-5	762847-45	TUBE ASSY, landing gear door up *(see fig. 118)*	1	
-6	762847-46	TUBE ASSY, landing gear door up	1	
-7	762847-49	TUBE ASSY, landing gear door down	1	
-8	785124-81	TUBE ASSY, landing gear up *(see fig. 121)*	1	
-9	785124-77	TUBE ASSY, landing gear downlock locked *(see fig. 121)*	1	
-10	770029-9	TUBE ASSY, landing gear door uplock unlock *(see fig. 118)*	1	
-11	770029-13	TUBE ASSY, landing gear door uplock unlock	1	
-12	770029-15	TUBE ASSY, landing gear door down	1	
-13	770029-17	TUBE ASSY, landing gear downlock unlock *(see fig. 119 and 121)*	1	
-14	770029-21	TUBE ASSY, landing gear door uplock locked *(see fig. 118)*	1	
-15	785124-1	TUBE ASSY, landing gear down *(see fig. 117 and 121)*	1	
-16	785124-3	TUBE ASSY, landing gear up *(see fig. 117 and 121)*	1	
-18	851179-101	TUBE ASSY, system No. 2 hydraulic return *(see fig. 117)*	1	
-19	851179-107	TUBE ASSY, system No. 2 hydraulic pressure *(see fig. 117)*	1	
-20	785124-83	TUBE ASSY, system No. 2 hydraulic pressure *(see fig. 121)*	1	
-22	785124-69	TUBE ASSY, system No. 2 hydraulic return	1	
-23	785218-59	TUBE ASSY, system No. 2 hydraulic return *(see fig. 121 for reqd)*	REF	
-26	785124-61	TUBE ASSY, anti-skid return	1	
-28	785124-57	TUBE ASSY, normal brake right *(see fig. 121)*	1	
-29	785124-59	TUBE ASSY, normal brake right	1	
-30	785124-29	TUBE ASSY, normal brake right *(see fig. 117)*	1	
-31	AN924-4D	NUT (88044)	2	
-32	AN960D716	WASHER (88044)	6	
-33	727733-1	SWIVEL ASSY, MLG actuating cylinder	2	
-34	727731-1	BODY, MLG actuating cylinder swivel	1	
-35	725996	HOUSING, MLG actuating cylinder swivel	1	
-36	725995	SHAFT, MLG actuating cylinder swivel	1	
-37	LS4565-6	RING, teflon backup packing (36659)	2	
-38	AN6227B6	PACKING (88044)	2	
-39	LS4565-12	RING, teflon backup packing (36659)	1	
-40	AN6227B12	PACKING (88044)	1	
-41	AN6290-8	GASKET (88044)	1	
-42	AN924-6D	NUT (88044)	1	
-44	727734-1	SWIVEL ASSY, MLG actuating cylinder	1	
-45	727732-1	BODY, MLG actuating cylinder swivel	1	
-46	727699-1	HOUSING, MLG actuating cylinder swivel	1	
-47	727999	SHAFT, MLG actuating cylinder swivel	1	
-48	LS4565-9	RING, teflon backup packing (36659)	2	
-49	AN6227B9	PACKING (88044)	2	
-50	LS4565-16	RING, teflon backup packing (36659)	1	
-51	AN6227B16	PACKING (88044)	1	
-52	AN6290-12	GASKET (88044)	1	
-54	2R2463-1	VALVE, restrictor (A2898) (91207) (Lockheed spec dwg 668433-1)	1	
-55	517-11	VALVE, (L3) anti-skid brake control (A1384) (alternate to 9541578) (see separate publication when available)	1	
	9541578	VALVE, (L3) anti-skid brake control (73842) (Lockheed spec dwg 662131-1) (see T.O. 9H8-14-241-3) (alternate to 517-11)	REF	
		Attaching Parts		
	NAS623-3-26	SCREW (80205)	2	
		*		
-56	MS21902D4	UNION (96906)	7	
-57	AS1008D0406	ELBOW (79470)	1	
	AN6289D4	NUT (88044)	1	

Fuselage Hydraulics

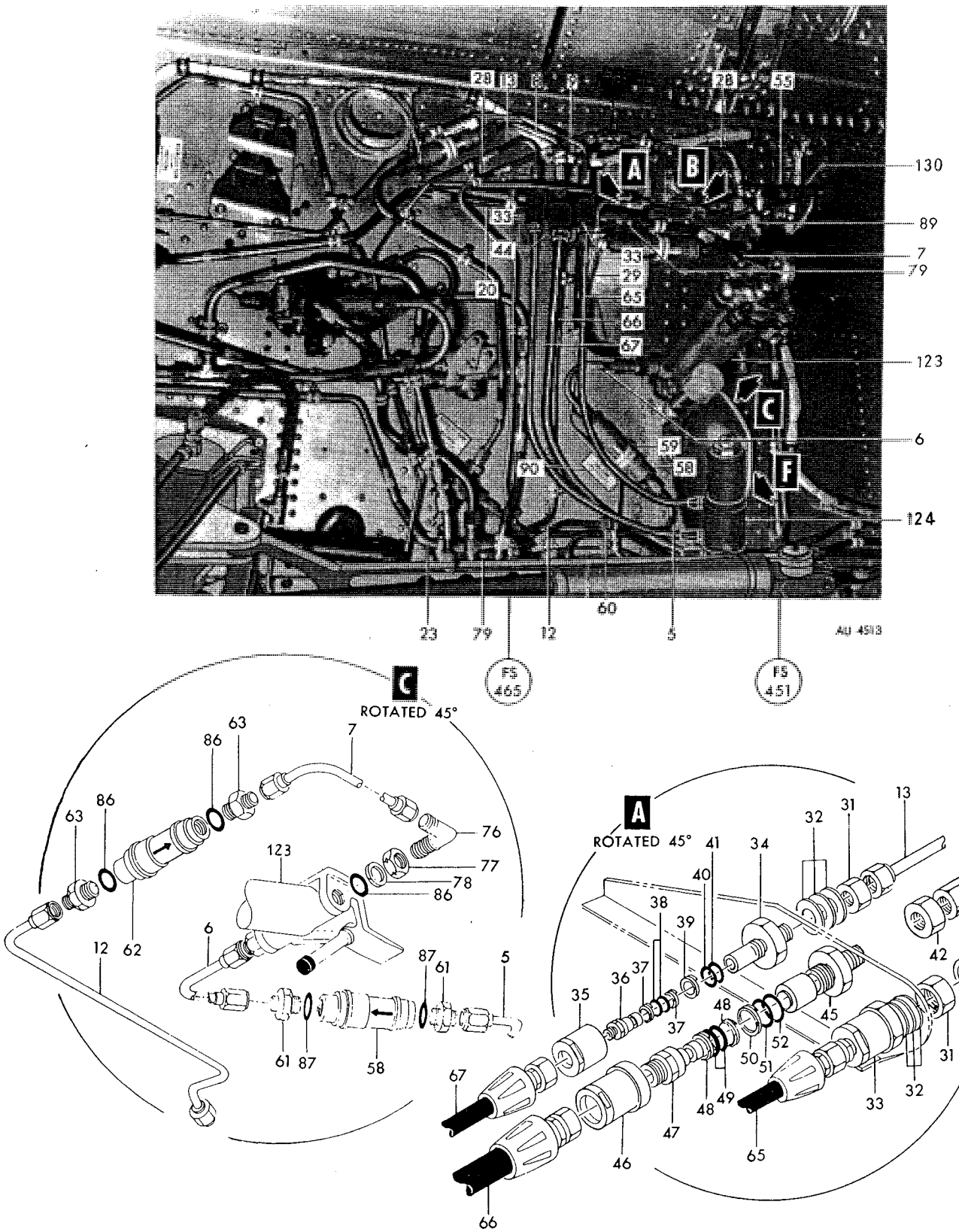

Figure 120— Main Wheel Well Piping and Equipment Fuselage Station 422 to 465 Right Hand (Sheet 1 of 3)

Fuselage Hydraulics

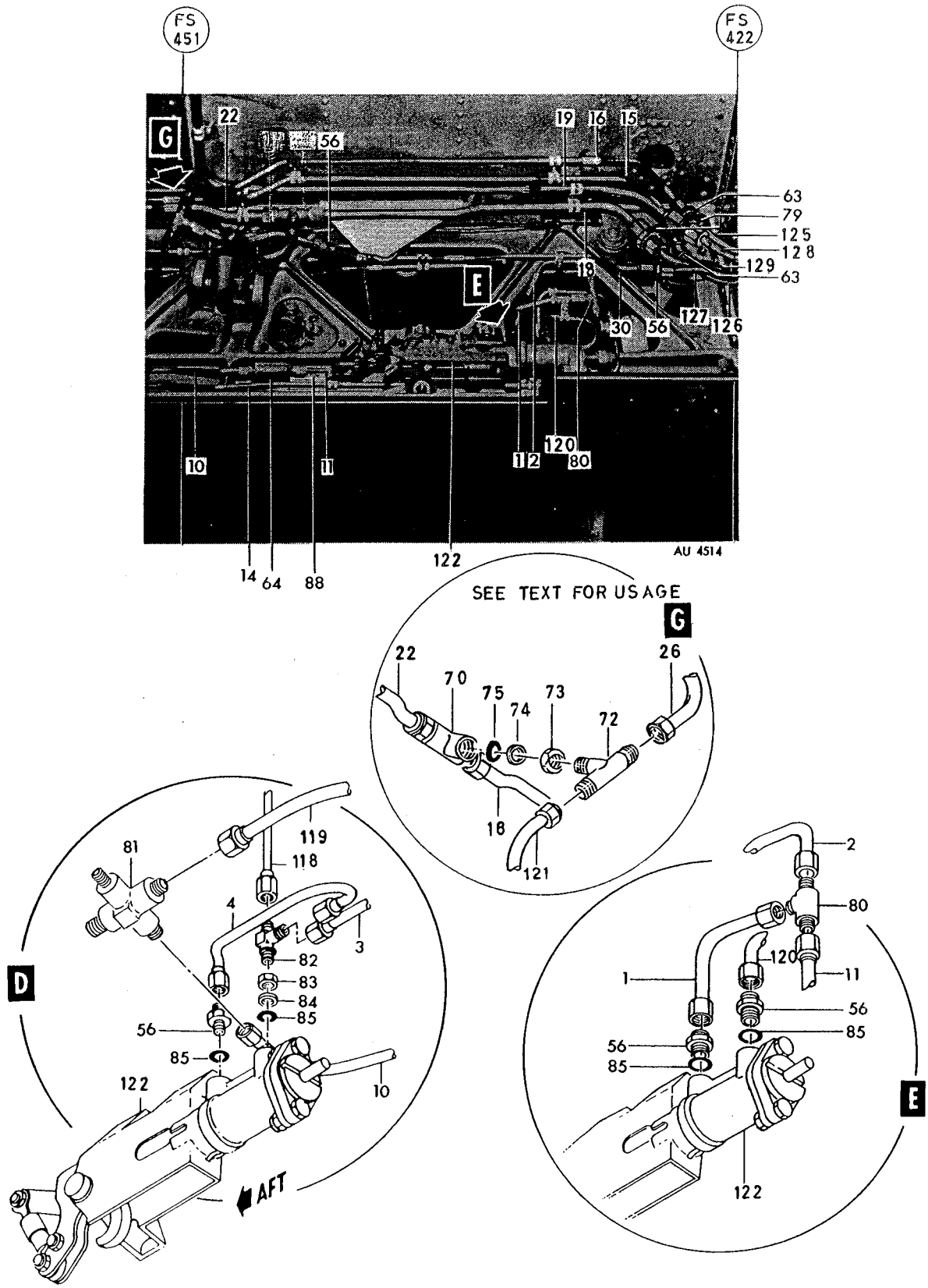

Figure 120— Main Wheel Well Piping and Equipment Fuselage Station 422 to 465 Right Hand (Sheet 2 of 3)

Fuselage Hydraulics

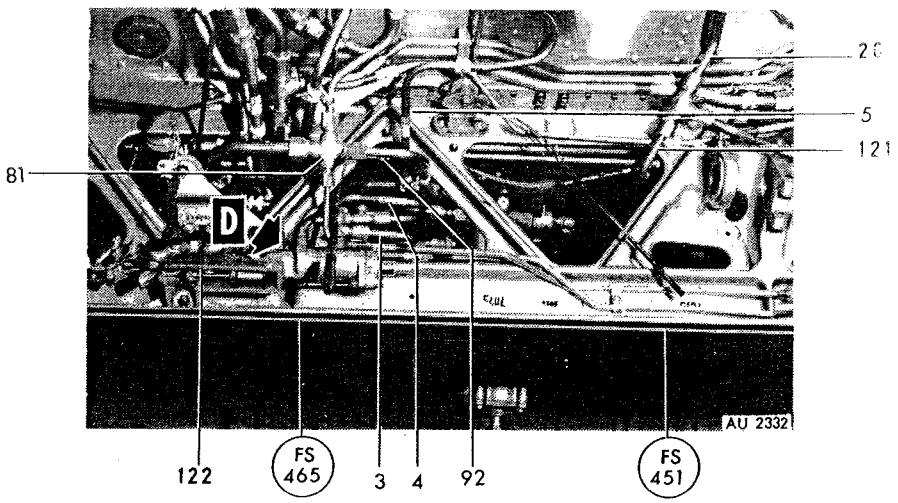

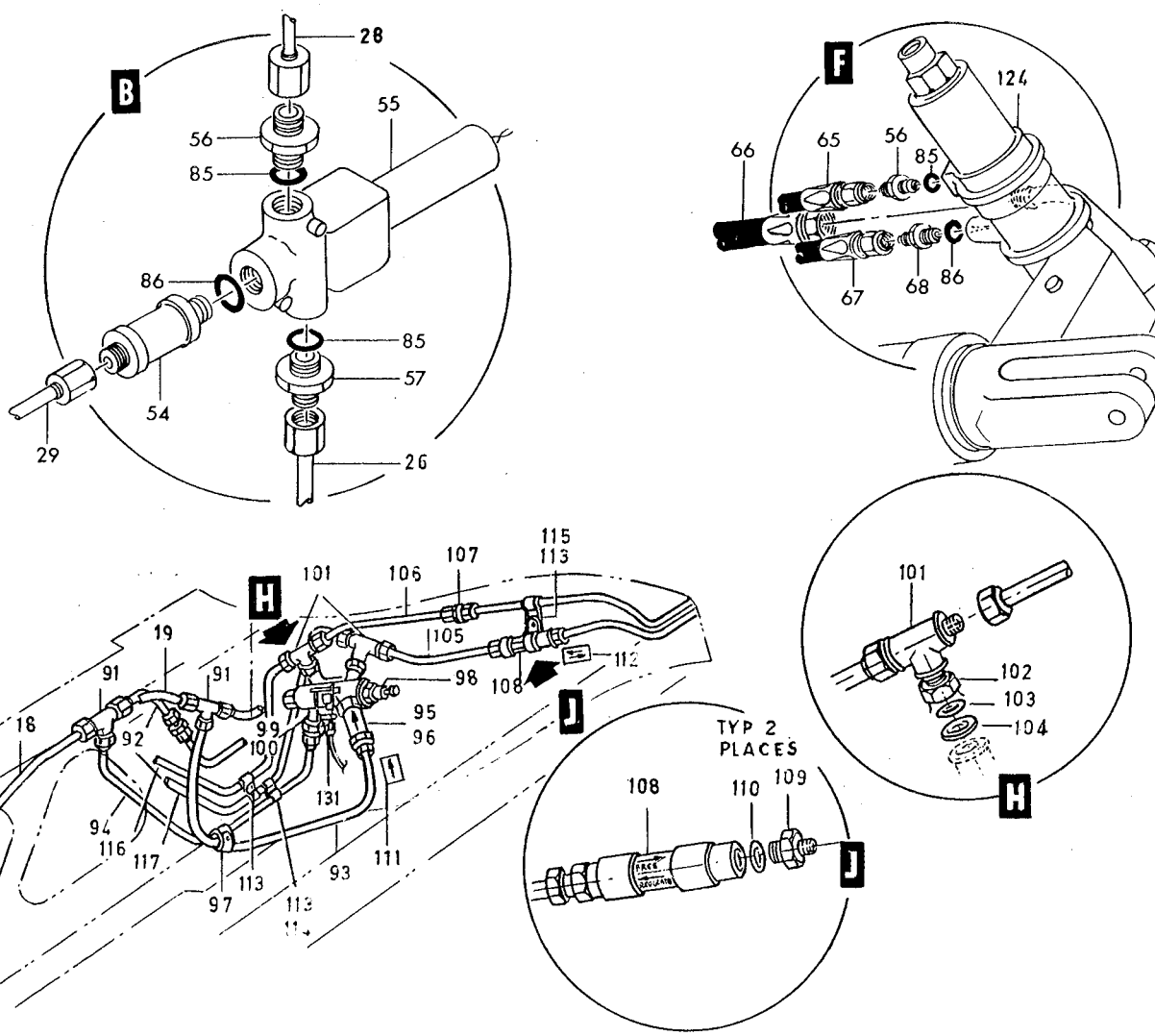

Figure 120— Main Wheel Well Piping and Equipment Fuselage Station 422 to 465 Right Hand (Sheet 3 of 3)

Figura e particolare	NDR	1	2	3	4	5	6	7	DENOMINAZIONE	Quant.	Codice applicab.
120	LS4764-4								RING, teflon hydraulic backup (36659)	1	
-58	0-7318								REGULATOR, MLG door constant flow liquid (A0359) (alternate to 9900-34) (see AA9-0/7318-4)	1	
	9900-34								REGULATOR, MLG door constant flow liquid (99643) (Lockheed spec dwg 668138-17) (alternate to 0-7318)	REF	
-59	TA4C74S15T								CLAMP, loop type (84971)	1	
-60	728005-1								CLAMPBLOCK ASSY, main wheel well hydraulic lines	1	
-61	MS21916D8-6								REDUCER (96906)	2	
-62	0-7310								VALVE, constant flow hydraulic regulator (A0359) (alternate to 9500-35) (see AA9-0/7310-4)	1	
	9500-35								VALVE, constant flow hydraulic regulator (99643) (Lockheed spec dwg 668255-11) (see T.O. 9H8-3-82-3)	REF	
-63	MS21902D6								UNION (96906)	4	
-64	1R3449-15-25								VALVE, landing gear hydraulic restrictor (A2898) (26044) (Lockheed spec dwg 668374-1)	1	
	1RF441								. FITTING, hydraulic restrictor valve (26044)	1	
	AN6290-8								. GASKET (88044)	1	
	28-101								. SPRING, hydraulic restrictor valve (26044)	1	
	1R3P5								. POPPET, hydraulic restrictor valve (26044)	1	
	GP364-12								. PIN, hydraulic restrictor valve (26044)	1	
	1LT63								. FILTER, hydraulic restrictor valve (26044)	1	
	1RH441-1								. HOUSING, hydraulic restrictor valve (26044)	1	
-65	BR295800-4-0186								HOSE ASSY, MLG hydraulic (50599)	1	
-66	BR295800-6-0230								HOSE ASSY, MLG hydraulic (50599) (Intchg with BR4724A0320E)	1	
	BR4724A0230E								HOSE ASSY, MLG hydraulic (50599) (Intchg with BR295800-6-0230)	REF	
-67	BR295800-4-0240								HOSE ASSY, MLG hydraulic (50599)	1	
-68	MS21916D6-4								REDUCER (96906)	1	
-70	AS1001D080806								TEE (79470)	1	
-72	MS21909D6								TEE (96906)	1	
-73	AN6289D6								NUT (88044)	1	
-74	LS4764-6								RING, teflon hydraulic backup (36659)	1	
-75	MS28778-6								PACKING (96906)	1	
-76	MS21908D6								ELBOW (96906)	1	
-77	AN6289D6								NUT (88044)	1	
-78	LS4764-6								RING, teflon hydraulic backup (36659)	1	
-79	MS21902D8								UNION (96906)	4	
-80	MS21905D4								TEE (96906)	1	
-81	AS1006D08060604								CROSS (79470)	1	
-82	MS21912D4								TEE (96906)	1	
-83	AN6289D4								NUT (88044)	1	
-84	LS4764-4								RING, teflon hydraulic backup (36659)	1	
-85	MS28778-4								PACKING (96906)	7	
-86	MS28778-6								PACKING (96906)	5	
-87	MS28778-8								PACKING (96906)	2	
-88	771669-1								DECAL, hydraulic system restricted flow	1	
-89	771672-1								DECAL, hydraulic system regulated flow	1	
-90	771675-1								DECAL, hydraulic system regulated flow	1	
-91	AS1005D080806								TEE (79470)	2	
-92	851179-103								TUBE ASSY, system No. 2 hydraulic return	1	
-93	851179-109								TUBE ASSY, system No. 2 hydraulic pressure	1	
-94	851179-105								TUBE ASSY, system No. 2 hydraulic return	1	
-95	4CV4612								VALVE, hydraulic check (A2898) (91207) (Lockheed spec dwg 668053-3) (see T.O. 9H8-6-74-4)	1	
									Partial Breakdown Follows		
	LS4634-6								. GASKET, boss straight thread tube fitting (36659) (whn exh use NAS1596-6)	1	
	NAS1596-6								. PACKING (80205) (use LS4634-6 until exh)	REF	
	4CVS62								. SPRING, hydraulic check valve (91207)	1	
	4CVP62								. POPPET, hydraulic check valve (91207)	1	
-96	MS28778-6								PACKING (96906)	1	
-97	TA4C69S6T								CLAMP, loop type (84971)	1	

Figura e particolare	NDR	1	2	3	4	5	6	7	DENOMINAZIONE	Quant.	Codice applicab.
									Attaching Parts		
120	NAS603-3		.	.					SCREW (80205)	1	
	MS21042L3		.	.					NUT (96906)	1	
									———— ✲ ————		
-98	71852-1		.	.					VALVE, (L30) hydraulic slide selector (A0809) (00502) (Lockheed spec dwg 670941-103) (see separate publication when available)	1	
									Attaching Parts		
	NAS623-3-4		.	.					SCREW (80205)	4	
									———— ✲ ————		
-99	MS21902D6		.	.					UNION (96906)	1	
-100	MS28778-6		.	.					PACKING (96906)	1	
-101	AS1009D040406		.	.					TEE (79470)	2	
-102	AN6289D6		.	.					NUT (88044)	2	
-103	MS28778-6		.	.					PACKING (96906)	2	
-104	LS4764-6		.	.					RING, teflon hydraulic (36659)	2	
-105	851179-111		.	.					TUBE ASSY, landing gear door closed	1	
-106	851179-113		.	.					TUBE ASSY, landing gear door open	1	
-107	MS21902D4		.	.					UNION (96906)	1	
-108	0-7309		.	.					REGULATOR, constant flow liquid (A0359) (alternate to 9900-35) (see AA9-0/7309-4)	1	
	9900-35		.	.					REGULATOR, constant flow liquid (99643) (Lockheed spec dwg 668138-19) (alternate to 0-7309)	REF	
-109	MS21916D6-4		.	.					REDUCER (96906)	2	
-110	MS28778-6		.	.					PACKING (96906)	2	
-111	771667-1		.	.					DECAL, free flow	1	
-112	771674-1		.	.					DECAL, hydraulic system regulated flow	1	
-113	TA4C69S4T		.	.					CLAMP, loop type (84971)	3	
-114	TA4C69S6T		.	.					CLAMP, loop type (84971)	1	
-115	TA4C69S14T		.	.					CLAMP, loop type (84971)	1	
									Attaching Parts		
	NAS623-3-2		.	.					SCREW (80205)	1	
	NAS603-6		.	.					SCREW (80205)	2	
	MS21042L3		.	.					NUT (96906)	3	
									———— ✲ ————		
-116	784868-111		.						TUBE ASSY, eng aux air door open *(see fig. 119 for reqd)*	REF	
-117	784868-113		.						TUBE ASSY, eng aux air inlet door closed *(see fig. 119 for reqd)*	REF	
-118	769923-43		.						TUBE ASSY, landing gear door uplock locked *(see fig. 118 for reqd)*	REF	
-119	769923-35		.						TUBE ASSY, landing gear door down *(see fig. 118 for reqd)*	REF	
-120	762846-22		.						TUBE ASSY, landing gear door uplock locked *(see fig. 118 for reqd)*	REF	
-121	784868-21		.						TUBE ASSY, anti-skid return *(see fig. 118 for reqd)*	REF	
	770686-20		.						LATCH ASSY, MLG door RH (consists of 1 each 770686-18, 761908M, 726259-3, 2 each AN320-3 and AN320-2-2) (spares only) (see T.O. 16L1-4-7-3) *(see fig. 242 for reqd)*	REF	
-122	770686-18		.						LATCH ASSY, MLG door RH (see T.O. 16L1-4-7-3) *(see fig. 242 for reqd)*	REF	
-123	788593-501		.						CYLINDER ASSY, MLG fwd door (see T.O. 9H2-2-36-13) *(see fig. 241 for reqd)*	REF	6701-6865
	788593-101		.						CYLINDER ASSY, MLG fwd door (see T.O. 9H2-2-36-13) *(see fig. 241 for reqd)*	REF	6866-
-124	849162-102		.						CYLINDER ASSY, MLG drag strut RH (see AA9-849162-4) *(see fig. 238 for reqd)*	REF	6701-6740
	849162-108		.						CYLINDER ASSY, MLG drag strut RH (see separate publication when available) *(see fig. 238 for reqd)*	REF	6741-6753
	849162-116		.						CYLINDER ASSY, MLG drag strut RH (see separate publication when available) *(see fig. 238 for reqd)*	REF	6754-
-125	784927-5		.						TUBE ASSY, landing gear down *(see fig. 117 for reqd)*	REF	
-126	784927-113		.						TUBE ASSY, landing gear up *(see fig. 117 for reqd)*	REF	
-127	784927-3		.						TUBE ASSY, normal brake right *(see fig. 117 for reqd)*	REF	
-128	784927-115		.						TUBE ASSY, system No. 2 hydraulic pressure *(see fig. 117 for reqd)*	REF	
-129	784927-117		.						TUBE ASSY, system No. 2 hydraulic return *(see fig. 117 for reqd)*	REF	
	849572-101		.						HARNESS ASSY, RH MLG *(see fig. 188 for reqd)*	REF	
-130	CA3106ER10SL4S		.	.					CONNECTOR, (P6) plug (brake control valve) (71468)	1	
-131	MS3116P8-4S		.	.					CONNECTOR, (P185) plug (inlet door cont. valve) (96906)	1	

Figura e particolare	NDR	1 2 3 4 5 6 7 DENOMINAZIONE	Quant.	Codice applicab.
		MAIN WHEEL WELL PIPING AND EQUIPMENT FUSELAGE STATION 465 TO 489 RIGHT HAND		
121	851173-103	PLUMBING INSTL, main wheel well *(see fig. 114 for reqd)*	REF	
- 1	034-70-06-254R2	HOSE ASSY, brake (A0355) (Alternate to 148-54501 and 750569-4)	1	
	750569-4	HOSE ASSY, brake (36659) (Alternate to 148-54501 and 034-70-06-254R2)	REF	
	148-54501	HOSE ASSY, brake (79470) (Alternate to 034-70-06-254R2 and 750569-4)	REF	
- 2	785124-77	TUBE ASSY, landing gear downlock locked *(see fig. 120 for reqd)*	REF	
- 3	785124-81	TUBE ASSY, landing gear up *(see fig. 120 for reqd)*	REF	
- 4	770029-17	TUBE ASSY, landing gear downlock unlock *(see fig. 120 for reqd)*	REF	
- 5	785124-1	TUBE ASSY, landing gear down *(see fig. 120 for reqd)*	REF	
- 6	785124-3	TUBE ASSY, landing gear up *(see fig. 120 for reqd)*	REF	
- 7	785124-83	TUBE ASSY, system No. 2 hydraulic pressure *(see fig. 120 for reqd)*	REF	
- 8	785218-59	TUBE ASSY, system No. 2 hydraulic return *(see fig. 120 and 128)*	1	
- 9	785124-57	TUBE ASSY, normal brake right *(see fig. 120 for reqd)*	REF	
-10	762847-57	TUBE ASSY, system No. 2 hydraulic pressure	1	
-11	762847-59	TUBE ASSY, system No. 2 hydraulic return	1	
-12	762847-61	TUBE ASSY, system No. 2 hydraulic return	1	
-13	762847-63	TUBE ASSY, system No. 2 hydraulic return	1	
-14	762847-65	TUBE ASSY, system No. 2 hydraulic return	1	
-15	762847-67	TUBE ASSY, landing gear up	1	
-16	785124-79	TUBE ASSY, landing gear up	1	
-17	785124-67	TUBE ASSY, landing gear down	1	
-18	785124-65	TUBE ASSY, landing gear down	1	
-19	770029-63	TUBE ASSY, system No. 2 hydraulic return *(see fig. 123)*	1	
-20	785124-11	TUBE ASSY, system No. 2 hydraulic pressure *(see fig. 123)*	1	
-21	785124-13	TUBE ASSY, system No. 2 hydraulic pressure	1	
-22	0-7317	REGULATOR, constant flow hydraulic (A0359) (alternate to 9900-33) (see AA9-0/7317-4)	1	
	9900-33	REGULATOR, constant flow hydraulic (99643) (Lockheed spec dwg 668138-15) (alternate to 0-7317)	REF	
-23	TA4C74S15T	CLAMP, loop type (84971)	1	
	TA4C69S4T	CLAMP, loop type (84971)	1	
		Attaching Parts		
	NAS603-22	SCREW (80205)	1	
	NAS43DD3-24	SPACER, phenolic (80205)	1	
-24	MS21902D6	UNION (96906)	2	
-25	MS28778-6	PACKING (96906)	2	
-26	21R3482-56-30	VALVE, MLG hydraulic restrictor (A2898) (26044) (Lockheed spec dwg 668273-7) (see T.O. 9H8-8-32-3)	1	
-27	AN937D8	CROSS (88044)	1	
-28	MS21916D8-6	REDUCER (96906)	3	
-29	1R3449-15-25	VALVE, landing gear hydraulic (A2898) (26044) (Lockheed spec dwg 668374-1)	1	
-30	MS21910D4	TEE (96906)	1	
-32	728178-1	BUSHING, flareless	1	
-33	AN924-4D	NUT (88044)	1	
-34	AN960-716L	WASHER (88044)	1	
-35	22K1-02	NUT, self-locking cap (72962)	1	
-36	LS881-7	WASHER, plain (36659)	1	
-37	728347-1	FITTING, hydraulic swivel body	1	
-38	MS28775-110	PACKING (96906)	2	
-39	725992	BOLT, brake hydraulic swing joint	1	
-40	725991	FITTING, brake swing joint support	1	
-41	AN316-7R	NUT (88044)	1	
-42	BR295800-4-0107	HOSE ASSY (landing gear down) (50599)	1	
-43	BR295800-4-0132	HOSE ASSY (MLG hydraulic) (50599)	1	
-44	MS21908D4	ELBOW (96906)	1	
-45	AN924-4D	NUT (88044)	1	
-46	AN960D716	WASHER (88044)	1	

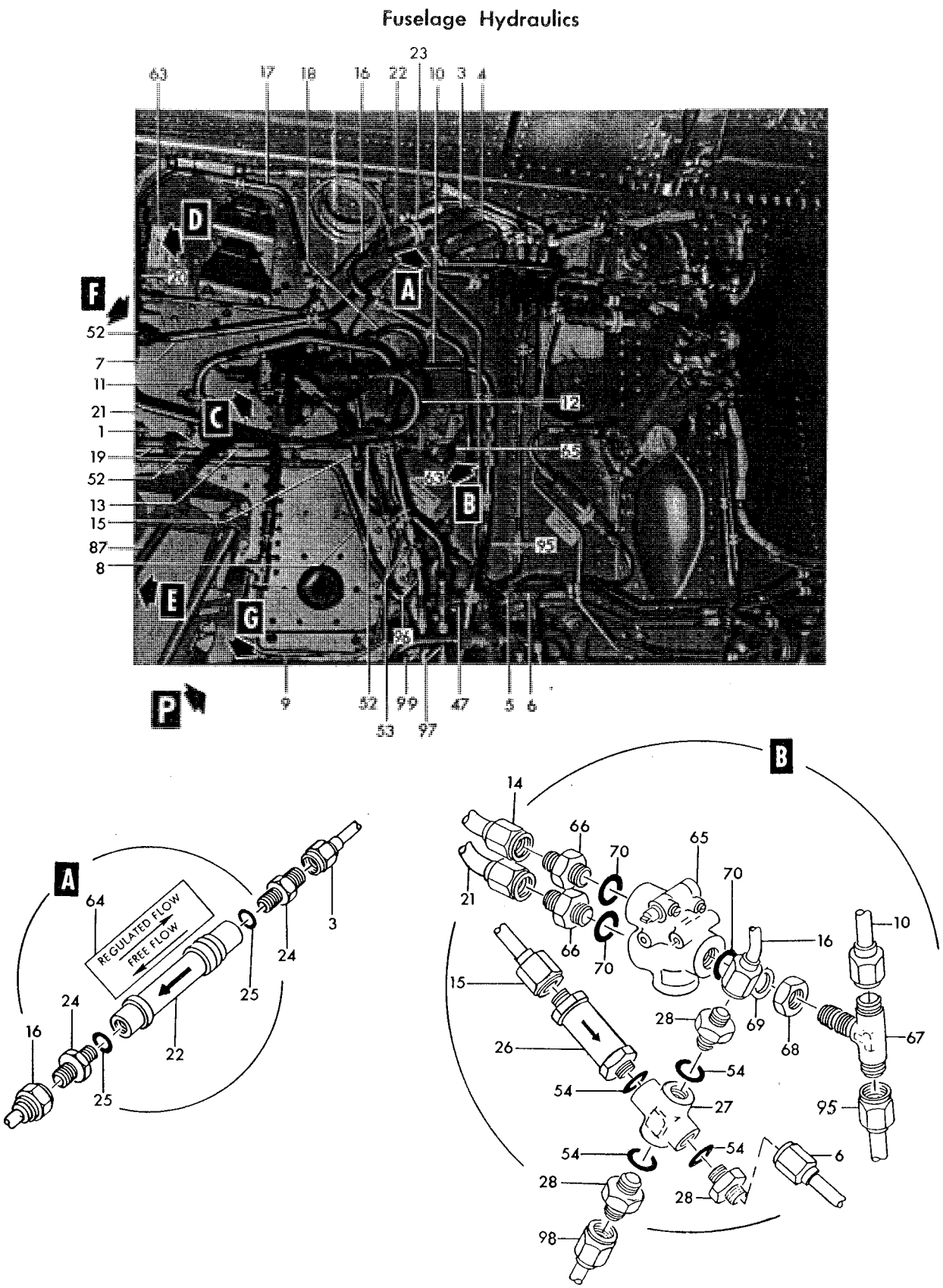

Figure 121— Main Wheel Well Piping and Equipment Fuselage Station 465 to 489 Right Hand (Sheet 1 of 3)

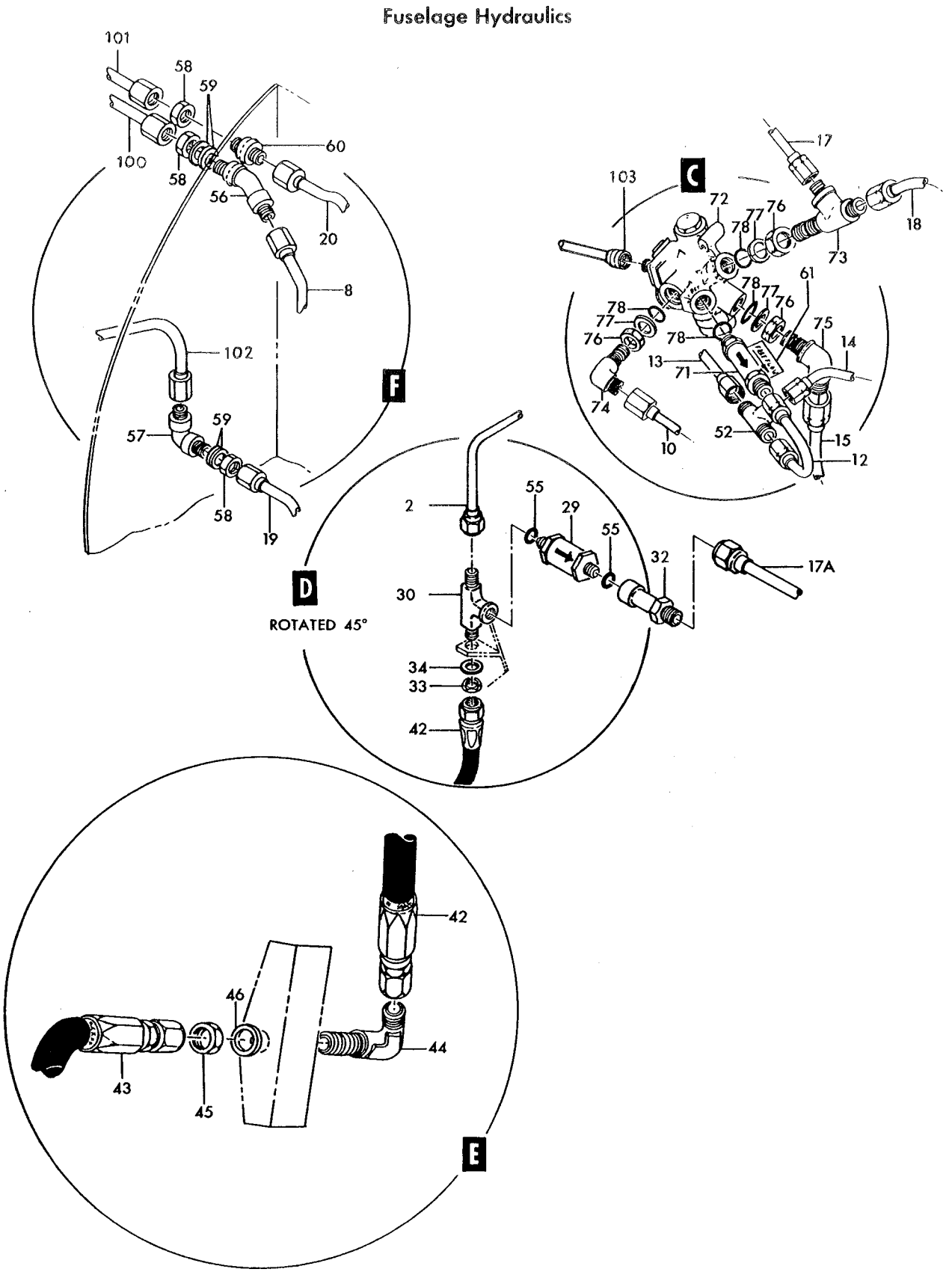

Figure 121—Main Wheel Well Piping and Equipment Fuselage Station 465 to 489 Right Hand (Sheet 2 of 3)

Fuselage Hydraulics

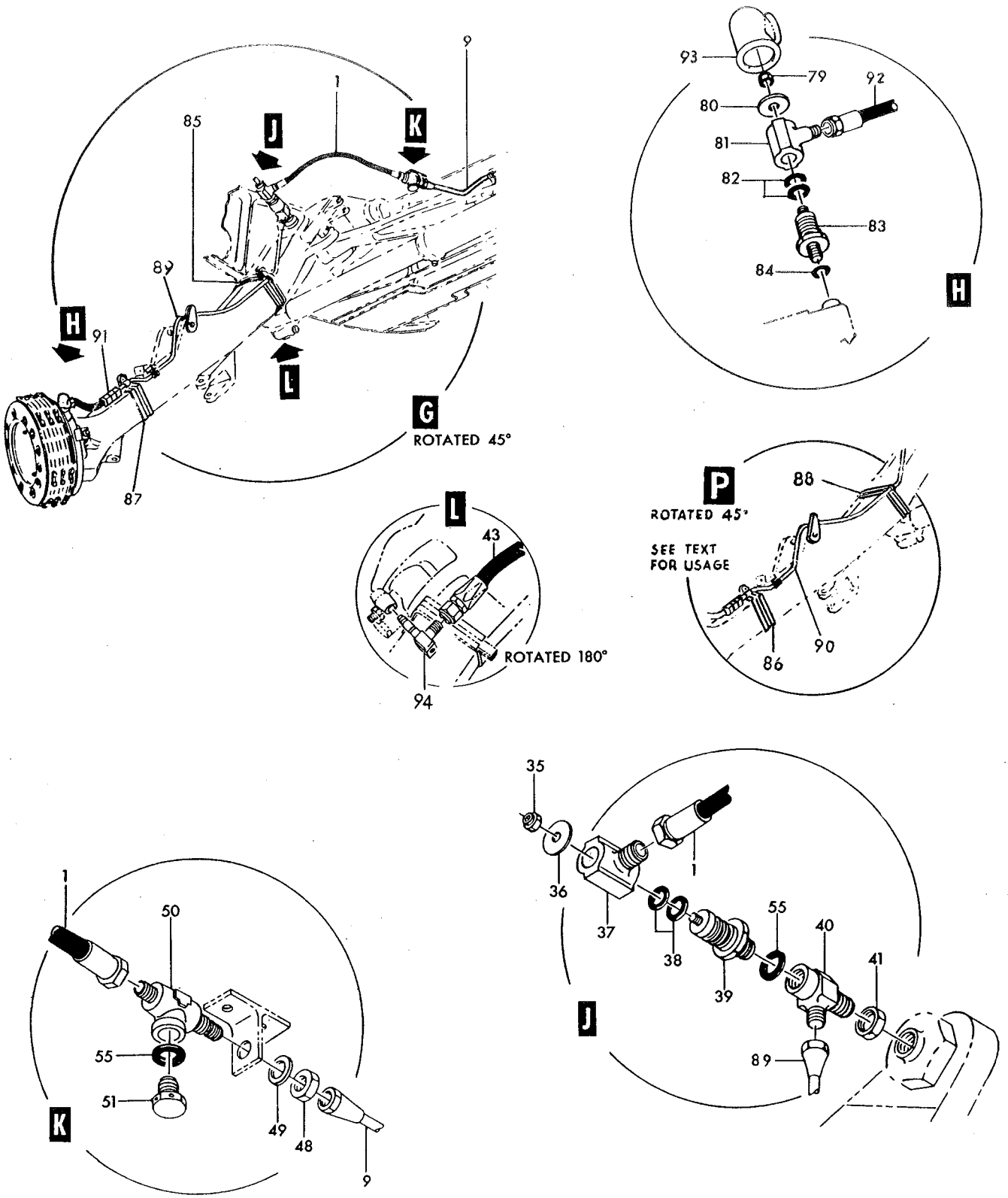

Figure 121—Main Wheel Well Piping and Equipment Fuselage Station 465 to 489 Right Hand (Sheet 3 of 3)

Figura e particolare	NDR	1 2 3 4 5 6 7 DENOMINAZIONE	Quant.	Codice applicab.
121-47	AS1005D080606	TEE (79470)	1	
-48	AN924-4D	NUT (88044)	1	
-49	AN960D716	WASHER (88044)	1	
-50	MS21910D4	TEE (96906)	1	
-51	AN814-4DL	PLUG (88044)	1	
-52	MS21905D8	TEE (96906)	3	
-53	MS21902D8	UNION (96906)	1	
-54	MS28778-8	PACKING (96906)	4	
-55	MS28778-4	PACKING (96906)	4	
-56	MS21907-8	ELBOW (96906)	1	
-57	MS21908-8	ELBOW (96906)	1	
-58	AN924-8	NUT (88044)	3	
-59	AN960-1216	WASHER (88044)	4	
-60	MS21924-8	UNION (96906)	1	
-61	771668-1	DECAL, hydraulic system free flow	1	
-63	771670-1	DECAL, hydraulic system restricted flow	2	
-64	771675-1	DECAL, hydraulic system regulated flow	1	
	784010-7	VALVE ASSY, main wheel well dump *(see fig. 88)*	1	
-65	51040-2	VALVE, MLG hydraulic dump (manually operated) (09790) (Lockheed spec dwg 668243-5) (see T.O. 9H8-4-101-23)	1	
		Attaching Parts		
	NAS623-3-24	SCREW (80205)	2	
	AN960D10	WASHER (88044)	2	
		———— * ————		
-66	MS21902D8	UNION (96906)	2	
-67	MS21909D8	TEE (96906)	1	
-68	AN6289D8	NUT (88044)	1	
-69	LS4764-8	RING, teflon hydraulic backup (36659)	1	
-70	LS4634-8	GASKET, boss straight thread tube fitting (36659) (whn exh use NAS1596-8)	3	
	NAS1596-8	PACKING (80205) (use LS4634-8 until exh)	REF	
	784010-9	VALVE ASSY, main wheel well selector	1	
-71	4CV483	VALVE ASSY, hydraulic check (A2898) (91207) (Lockheed spec dwg 668054-3) (see T.O. 9H8-6-74-4)	1	
		Partial Breakdown Follows		
	LS4634-8	GASKET, boss straight thread tube fitting (36659) (whn exh use NAS1596-8)	1	
	NAS1596-8	PACKING (80205) (use LS4634-8 until exh)	REF	
	4CVS63	SPRING, hydraulic check valve (91207)	1	
	4CVP63	POPPET, hydraulic check valve (91207)	1	
-72	15020-6	VALVE, (L11) MLG solenoid hydraulic selector (A0359) (79294) (Lockheed spec dwg 668253-7) (see T.O. 9H8-14-189-53)	1	
		Attaching Parts		
	AN4-15A	BOLT (88044)	2	
	AN960-416	WASHER (88044)	2	
		———— * ————		
-73	ER804D080806	TEE (79470)	1	
-74	MS21908D8	ELBOW (96906)	1	
-75	MS21907D8	ELBOW (96906)	1	
-76	AN6289D8	NUT (88044)	3	
-77	LS4764-8	RING, teflon hydraulic backup (36659)	3	
-78	AN6290-8	GASKET (88044)	4	
	793004-101	A. PLUMBING INSTL, RH landing gear assy *(see fig. 238 for reqd)*	REF	6701-6790
	793004-103	B. PLUMBING INSTL, RH landing gear assy *(see fig. 238 for reqd)*	REF	
-79	22K1-02	NUT, self-locking cap (72962)	1	
-80	LS881-7	WASHER, plain (36659)	1	
-81	728347-1	FITTING, hydraulic swivel body	1	
-82	MS28775-110	PACKING (96906)	2	
-83	725992	BOLT, brake hydraulic swing joint	1	
-84	AN6290-4	GASKET (88044)	1	

Figura e particolare	NDR		DENOMINAZIONE 1 2 3 4 5 6 7	Quant.	Codice applicab.
121-85	762855	A.	. CLAMP ASSY, MLG leg	1	6701-6790
-86	762855-101	B.	. CLAMP ASSY, MLG leg	1	
-87	795783-101	A.	. CLAMP ASSY, MLG leg	1	6701-6790
-88	852162-111	B.	. CLAMP ASSY, MLG leg	1	
-89	785124-109	A.	. TUBE ASSY, normal brake right	1	6701-6790
-90	785124-111	B.	. TUBE ASSY, normal brake right	1	
-91	MS21902-4	B.	. UNION (96906)	1	
-92	L656252-4-0066	B.	. HOSE ASSY (00624)	1	
-93	852064-101	B.	. COVER, hyd swivel body	1	
-94	726066		. ELBOW, MLG plumbing *(see fig. 237 for reqd)*	REF	
-95	762846-59		. TUBE ASSY, system no. 2 hydraulic pressure *(see fig. 119 for reqd)*	REF	
-96	762846-61		. TUBE ASSY, system no. 2 hydraulic return *(see fig. 119 for reqd)*	REF	
-97	762846-65		. TUBE ASSY, landing gear up *(see fig. 119 for reqd)*	REF	
-98	769923-1		. TUBE ASSY, landing gear down *(see fig. 119 for reqd)*	REF	
-99	769923-39		. TUBE ASSY, landing gear door down *(see fig. 119 for reqd)*	REF	
-100	798411-171		. TUBE ASSY, system no. 2 hydraulic return *(see fig. 123 for reqd)*	REF	6701-6790; 6831-
-101	798411-127		. TUBE ASSY, system no. 2 hydraulic pressure *(see fig. 123 for reqd)*	REF	
-102	771567-115		. TUBE ASSY, system no. 2 hydraulic return *(see fig. 123 for reqd)*	REF	
	849572-101		. HARNESS ASSY, RH MLG *(see fig. 188 for reqd)*	REF	
-103	MS25183-10SL3S		. . CONNECTOR, (P5) plug (landing gear selector valve) (96906)	1	

A - Removed per AA.1F-104-OT-714A
B - Reqd per AA.1F-104-OT-714A

Figura e particolare	NDR	DENOMINAZIONE 1 2 3 4 5 6 7	Quant.	Codice applicab.
		ENGINE COMPARTMENT PIPING AND EQUIPMENT FUSELAGE STATION 489 TO 579 LEFT HAND		
122	850949-101	PLUMBING INSTL, LH engine compartment hydraulic *(see fig. 114 for reqd)*.	REF	
-1	785382-3	TUBE ASSY, system No. 2 hydraulic pressure	1	6701-6790; 6831-
-2	785382-5	TUBE ASSY, system No. 2 hydraulic pressure	1	6701-6790; 6831-
-3	850962-115	TUBE ASSY, system No. 2 hydraulic return	1	
	771667-1	NAMEPLATE, free flow direction	3	
-4	850962-119	TUBE ASSY, system No. 2 hydraulic return	1	
-5	850962-133	TUBE ASSY, drain	1	
-6	785382-19	TUBE ASSY, system No. 2 hydraulic return	1	
-7	785382-23	TUBE ASSY, system No. 1 hydraulic return	1	
-9	798411-137	TUBE ASSY, system No. 1 hydraulic pressure	1	
	794746-1	DECAL, flow direction	1	
-11	789861-3	TUBE ASSY, system No. 1 hydraulic pressure	1	
-12	850962-139	TUBE ASSY, emergency pump suction *(see fig. 127)*	1	
-13	789861-51	TUBE ASSY, system No. 2 hydraulic pressure	1	
-14	4CV4612	VALVE, hydraulic check (A2898) (26044) (Lockheed spec dwg 668053-3) (see T.O. 9H8-6-74-4)	2	
		Partial Breakdown Follows		
	LS4634-6	GASKET, boss straight thread tube fitting (36659) (whn exh use NAS1596-6)	1	
	NAS1596-6	PACKING (80205) (use LS4634-6 until exh)	REF	
	4CVS62	SPRING, hydraulic check valve (26044)	1	
	4CVP62	POPPET, hydraulic check valve (26044)	1	
-15	2533A1-3	VALVE, hydraulic balanced relief (09790) (Lockheed spec dwg 668412-3)	1	
		Partial Breakdown Follows		
	MS28775-114	PACKING (96906)	1	
-16	153780	HEAT EXCHANGER, hydraulic system oil to fuel (A0076) (70210) (Lockheed spec dwg 668425-1) (see T.O. 9H14-11-3) *(see fig. 112)*	2	
	S8842	NAMEPLATE, heat exchanger (70210)	1	
-17	TA715S20	CLAMP, loop type (84971)	4	
		Attaching Parts		
	NAS623-3-2	SCREW (80205)	1	
	NAS623-3-6	SCREW (80205)	2	
	MS21042L3	NUT (96906)	2	
		*		
-18	763330	FITTING, drain	2	
-19	AS1003D161610	TEE (79470)	1	
-20	AS1009D060608	TEE (79470)	2	6701-6790; 6831-
-22	MS21902D6	UNION (96906)	4	
-22A	MS21902D6	UNION (96906)	1	6701-6790; 6831-
-23	AN6289D6	NUT (88044)	2	
-24	AS1003D060604	TEE (79470)	2	
-25	LS4764-6	RING, teflon hydraulic backup (36659)	2	
-26	LS4634-6	GASKET, boss straight thread tube fitting (36659) (whn exh use NAS1596-6)	2	
	NAS1596-6	PACKING (80205) (use LS4634-6 until exh)	REF	
-27	MS21924D6	UNION (96906)	1	
-27A	AN960D916	WASHER (88044)	4	
-28	MS21905D6	TEE (96906)	1	6701-6790; 6831-
-29	MS21911D6	TEE (96906)	2	
-29A	MS21912D6	TEE (96906)	1	
-30	MS21907D8	ELBOW (96906)	1	
-31	MS21908D8	ELBOW (96906)	1	
-33	AN893-12D	BUSHING (88044)	1	
-34	LS4634-8	GASKET, boss straight thread tube fitting (36659) (whn exh use NAS1596-8)	1	
	NAS1596-8	PACKING (80205) (use LS4634-8 until exh)	REF	
-35	R4724D0100E182	HOSE ASSY, hydraulic (50599)	1	
-36	R4724D0095E125	HOSE ASSY, hydraulic (50599)	1	
-37	AN924-6D	NUT (88044)	4	
-39	AN6289D8	NUT (88044)	4	
-40	AN6289D16	NUT (88044)	1	

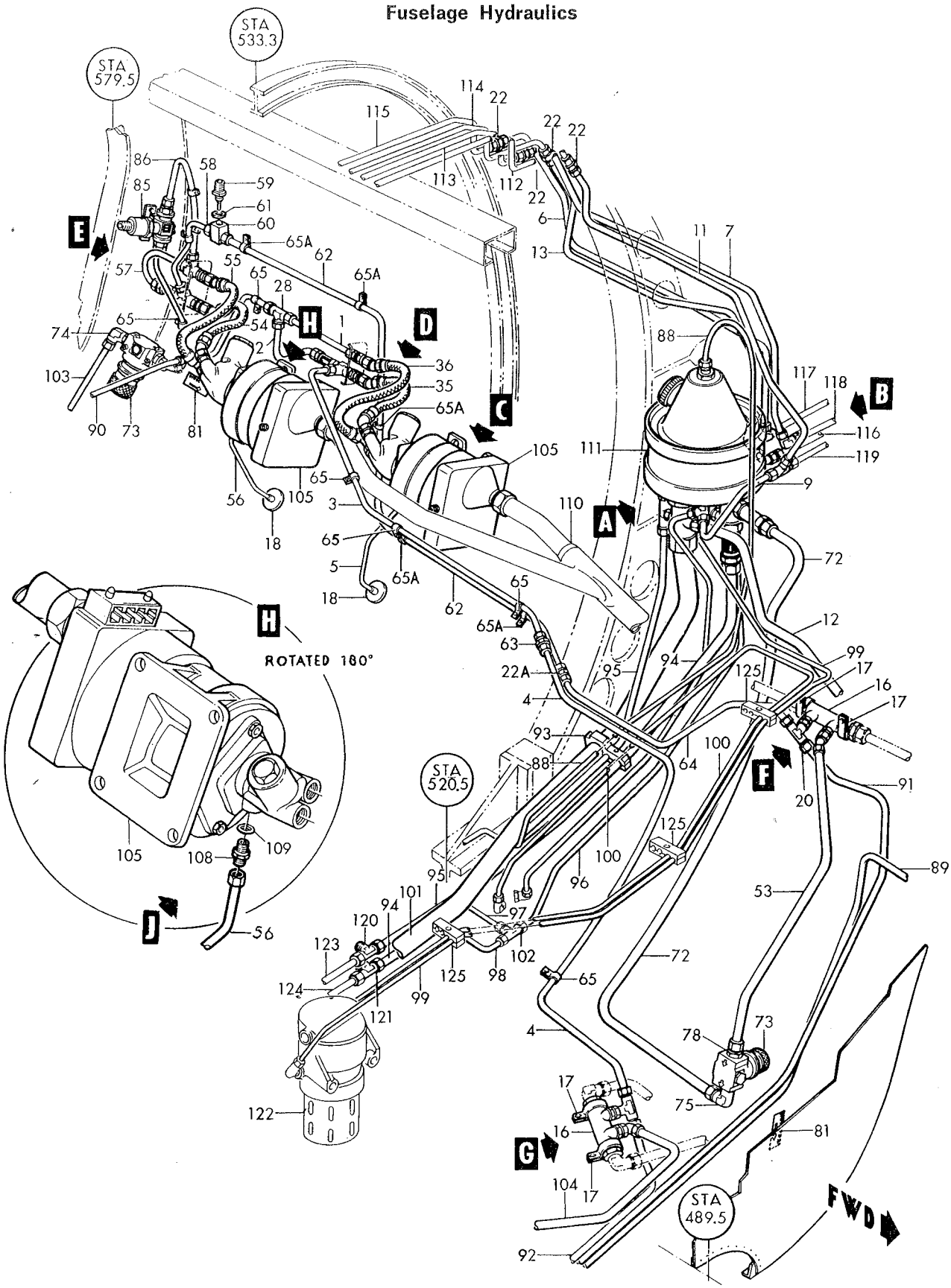

Figure 122–Engine Compartment Piping and Equipment Fuselage (Sheet 1 of 3)

Fuselage Hydraulics

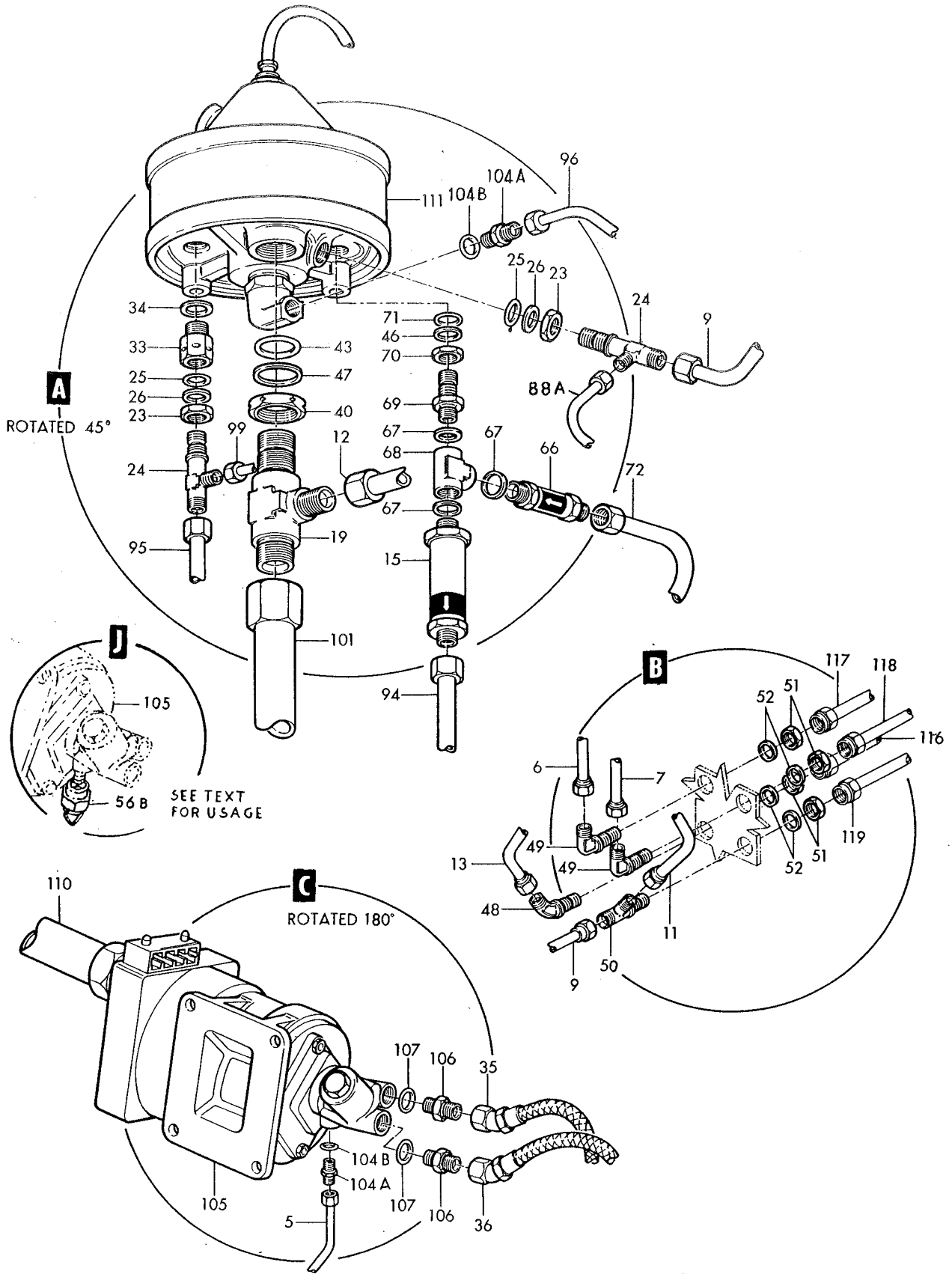

Figure 122–Engine Compartment Piping and Equipment Fuselage (Sheet 2 of 3)

Fuselage Hydraulics

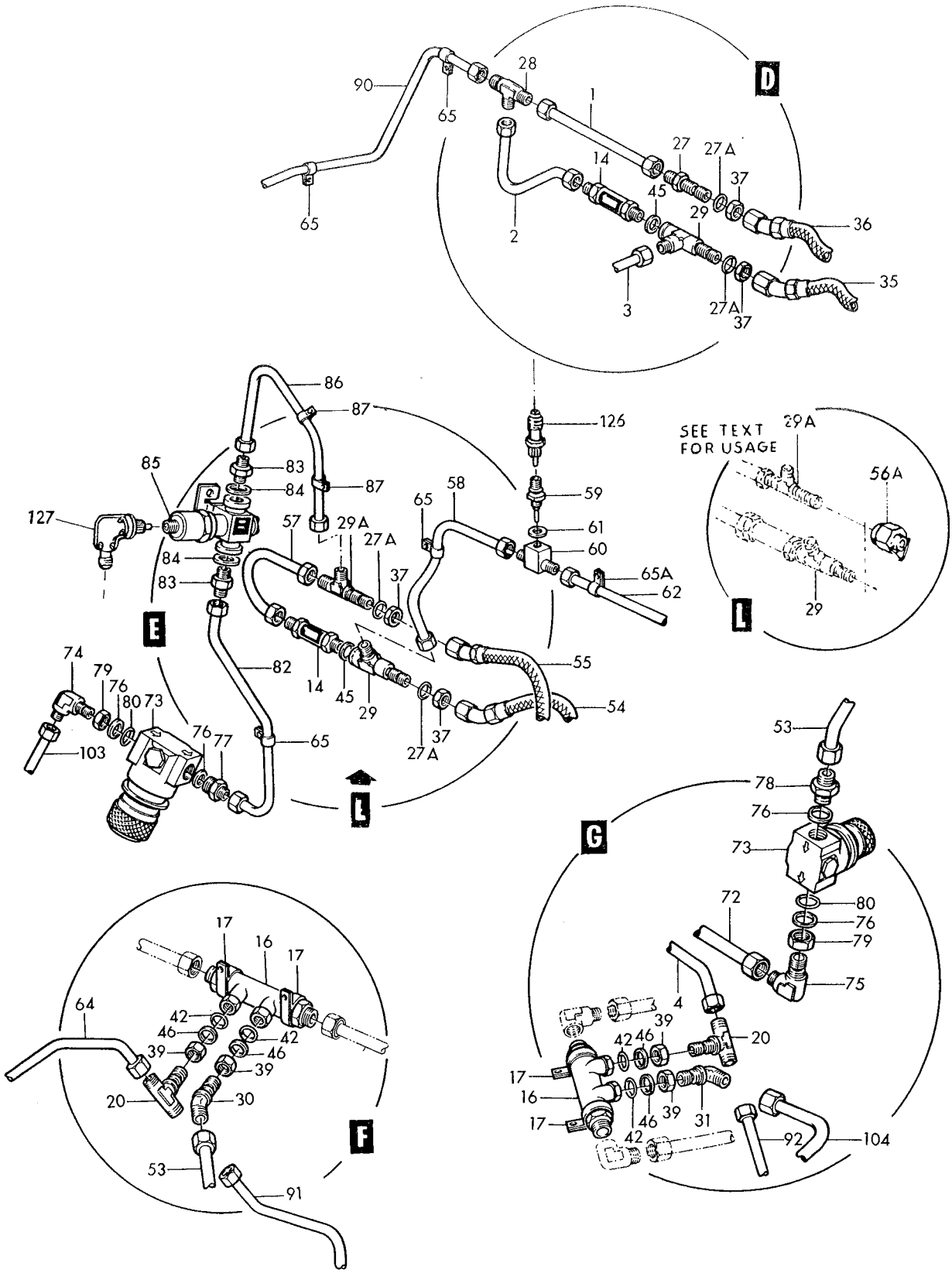

Figure 122–Engine Compartment Piping and Equipment Fuselage (Sheet 3 of 3)

Figura e particolare	NDR	1	2	3	4	5	6	7	DENOMINAZIONE	Quant.	Codice applicab.
122-42	LS4764-8								RING, teflon hydraulic backup (36659)	4	
-43	LS4764-16								RING, teflon hydraulic backup (36659)	1	
-45	LS4634-6								GASKET, boss straight thread tube fitting (36659) (whn exh use NAS1596-6)	2	
	NAS1596-6								PACKING (80205) (use LS4634-6 until exh)	REF	
-46	LS4634-8								GASKET, boss straight thread tube fitting (36659) (whn exh use NAS1596-8)	5	
	NAS1596-8								PACKING (80205) (use LS4634-8 until exh)	REF	
-47	LS4634-16								GASKET, boss straight thread tube fitting (36659) (whn exh use NAS1596-16)	1	
	NAS1596-16								PACKING (80205) (use LS4634-16 until exh)	REF	
-48	MS21907D6								ELBOW (96906)	1	
-49	MS21908D6								ELBOW (96906)	2	
-50	MS21912D6								TEE (96906)	1	
-51	AN924-6D								NUT (88044)	4	
-52	AN960D916								WASHER (88044)	4	
-53	850962-125								TUBE ASSY, system No. 1 hydraulic return *(see fig. 123)*	1	
-54	R4724D0106E208	A.							HOSE ASSY, hydraulic (50599)	1	
-55	R4724D0103E180	A.							HOSE ASSY, hydraulic (50599)	1	
-56	850962-135	A.							TUBE ASSY, drain	1	6701-6790
	850962-145	A.							TUBE ASSY, drain	1	6791-
-56A	MS21914-6D	B.							CAP (96906)	2	
-56B	MS21914-4D	B.							CAP (96906)	1	
-57	850962-111								TUBE ASSY, system No. 1 hydraulic pressure	1	
-58	850962-141								TUBE ASSY, system No. 1 hydraulic return	1	
-59	P2300-102								THERMO SWITCH, (S175) (81901) (Lockheed spec dwg 740533-101)	1	
-60	728713-101								TEE, flareless tube internal thread on side	1	
-61	NAS1596-5								PACKING (80205)	1	
-62	850962-113								TUBE ASSY, system No. 1 hydraulic return	1	6701-6790; 6831-
-63	MS21902D4								UNION (96906)	1	
-64	850962-121								TUBE ASSY, system No. 1 hydraulic return	1	
-65	TA4C69S6T								CLAMP, loop type (84971)	7	
-65A	TA4C69S6T								CLAMP, loop type (84971)	5	6701-6790; 6831-
									Attaching Parts		
	NAS603-8								SCREW (80205)	3	
	NAS603-8								SCREW (80205)	3	6701-6790; 6831-
	NAS603-12								SCREW (80205)	1	
	NAS603-18								SCREW (80205)	1	
	LS607-4								SPACER (36659)	1	
	LS607-12								SPACER (36659)	1	
	LS607-20								SPACER (36659)	1	
	MS21042L3								NUT (96906)	5	
	MS21042L3								NUT (96906)	3	6701-6790; 6831-
									*		
-66	4CV483								VALVE, hydraulic check (A2898) (26044) (Lockheed spec dwg 668054-3) (see T.O. 9H8-6-74-4)	1	
									Partial Breakdown Follows		
	LS4634-8			.					GASKET, boss straight thread tube fitting (36659) (whn exh use NAS1596-8)	1	
	NAS1596-8			.					PACKING (80205) (use LS4634-8 until exh)	REF	
	4CVS63			.					SPRING, hydraulic check valve (26044)	1	
	4CVP63			.					POPPET, hydraulic check valve (26044)	1	
-67	NAS1596-8			.					PACKING (80205)	3	
-68	AN938D8								TEE (88044)	1	
-69	MS21924D8								UNION (96906)	1	
-70	AN6289D8								NUT (88044)	1	
-71	LS4764-8								RING, teflon hydraulic backup (36659)	1	
-72	850962-123								TUBE ASSY, system No. 1 hydraulic return	1	
-73	AC1000-10								FILTER ASSY, hydraulic oil (A0303) (01414) (Lockheed spec dwg 668284-1) (61430 is an alternate) (see T.O. 9H3-3-44-3)	2	
	61430								FILTER ASSY, hydraulic oil (81321) (Lockheed spec dwg 668284-1) (alternate for AC1000-10) (see T.O. 9H3-3-73-3)	REF	
									Attaching Parts		
	NAS623-4-32								SCREW (80205)	4	
	AN960D416								WASHER (88044)	4	
	NAS43DD4-34								SPACER (80205)	4	
									*		

Figura e particolare	NDR	1 2 3 4 5 6 7 DENOMINAZIONE	Quant.	Codice applicab.
122-74	AS1008D1006	. . ELBOW (79470)	1	
-75	AS1008D1008	. . ELBOW (79470)	1	
-76	NAS1596-10	. . PACKING (80205)	4	
-77	MS21916D10-6	. . REDUCER (96906)	1	
-78	MS21916D10-8	. . REDUCER (96906)	1	
-79	AN6289D10	. . NUT (88044)	2	
-80	LS4764-10	. . RING, teflon hydraulic backup (36659)	2	
-81	771665-1	. . DECAL, hydraulic system direction of flow	2	
-82	850962-107	. . TUBE ASSY, system No. 1 hydraulic pressure	1	6701-6790; 6831-
-83	MS21902D6	. . UNION (96906)	2	
-84	NAS1596-6	. . PACKING (80205)	2	
-85	V226004	. . VALVE, (L14) solenoid operated hydraulic shutoff (98315) (Lockheed spec dwg 668426-5) (see T.O. 9H8-4-154-3)	1	
-86	850962-109	. . TUBE ASSY, system No. 1 hydraulic pressure	1	
-87	TA4C69S6T	. . CLAMP, loop type (84971)	2	
		Attaching Parts		
	NAS603-8	. . SCREW (80205)	1	
	MS21042L3	. . NUT (96906)	1	
		——————*——————		
	850949-103	. PLUMBING INSTL, LH engine compartment hydraulic *(see fig. 114 for reqd)*	REF	
-88	765337-49	. . TUBE ASSY, system No. 1 hydraulic fluid level indicating system *(see fig. 128)*	1	6701-6790; 6831-
-88A	798411-115	. . TUBE ASSY, system No. 1 hydraulic pressure *(see fig. 128)*	1	
-89	850962-129	. . TUBE ASSY, emergency pump pressure *(see fig. 127)*	1	
-90	850962-103	. . TUBE ASSY, system No. 2 hydraulic pressure	1	6701-6790; 6831-
-91	850962-127	. . TUBE ASSY, hydraulic pump drain	1	6701-6790; 6831-
-92	850962-137	. . TUBE ASSY, hydraulic pump drain *(see fig. 123)*	1	6701-6790; 6831-
-93	728670-101	. . CLAMPBLOCK ASSY, No.1 system LH engine compartment (match comp do not stk sep)	1	
		Attaching Parts		
	NAS603-20	. . SCREW (80205)	2	
	MS21042L3	. . NUT (96906)	2	
		——————*——————		
-94	850962-117	. . TUBE ASSY, hydraulic reservoir relief	1	6701-6790; 6831-
-95	798411-153	. . TUBE ASSY, system No. 1 hydraulic return	1	
-96	798411-149	. . TUBE ASSY, system No. 1 reservoir pressure	1	6701-6790; 6831-
-97	798411-151	. . TUBE ASSY, system No. 1 reservoir pressure *(see fig. 128)*	1	
-98	798411-147	. . TUBE ASSY, hydraulic reservoir bleed *(see fig. 128)*	1	6701-6790; 6831-
-99	798411-117	. . TUBE ASSY, system No. 1 hydraulic return	1	
-100	798411-113	. . TUBE ASSY, system No. 1 hydraulic pressure *(see fig. 128)*	1	6701-6790; 6831-
-101	850962-101	. . TUBE ASSY, system No. 1 hydraulic pump suction *(see fig. 123)*	1	6701-6790; 6831-
-102	MS21905D4	. . TEE (96906)	1	
-103	850962-105	. . TUBE ASSY, system No. 1 hydraulic pressure	1	6701-6790; 6831-
-104	850962-131	. . TUBE ASSY, system No. 2 hydraulic return	1	
-104A	MS21902D4	. . UNION (96906)	2	
-104B	NAS1596-4	. . PACKING (80205)	2	
	850931-103	. ALTERNATOR INSTL, No. 1 system hydraulic driven *(see fig. 114 for reqd)*	REF	
	850932-103	. ALTERNATOR INSTL, No. 2 system hydraulic driven *(see fig. 114 for reqd)*	REF	
-105	EA1010-135-6	. . ALTERNATOR ASSY, (G9) hydraulic motor driven (62983) (Lockheed spec dwg 668419-103) (see T.O. 9H7-2-5-4)	1	
		Attaching Parts		
	NAS1104-9	. . BOLT (80205)	4	
	AN960D416	. . WASHER (88044)	AR	
		——————*——————		
-106	MS21902D6	. . UNION (96906)	2	
-107	LS4634-6	. . GASKET, boss straight thread tube fitting (36659) (whn exh use NAS1596-6)	2	
	NAS1596-6	. . PACKING (80205) (use LS4634-6 until exh)	REF	
-108	MS21902D4	. . UNION (96906) (only on No. 1 alternator)	1	
-109	NAS1596-4	. . PACKING (80205) (only on No. 1 alternator)	1	
-110	850657-101	E. TUBE ASSY, alternator air intake *(see fig. 253 for reqd)*	REF	

Figura e particolare	NDR	1 2 3 4 5 6 7	DENOMINAZIONE	Quant.	Codice applicab.
122	784348-1	B.	TUBE ASSY, alternator air intake *(see fig. 253 for reqd)*	REF	
	789390-101	.	RESERVOIR INSTL, No. 1 main hydraulic system *(see fig. 114 for reqd)*	REF	6701-6830
	789390-105	.	RESERVOIR INSTL, No. 1 main hydraulic system *(see fig. 114 for reqd)*	REF	6831-
-111	789365-103	D.	. RESERVOIR ASSY, hydraulic system No. 1 (Modified and reidentified to 789365-111 per AA.1F-104-OT-679A) (see T.O. 9H5-3-34-3) *(see fig. 127)*	1	6701-6776
	789365-111	C.	. RESERVOIR ASSY, hydraulic system No. 1 (Supersedes 789365-103 per AA.1F-104-OT-679A) (see Sep. Pub. whn avail.) *(see fig. 127)*	1	6777-6790
	789365-123	G.	. RESERVOIR ASSY, hydraulic system No. 1 (see Sep. Publ. whn avail.) *(see fig. 127)*	1	6791-6830
	789365-125	F.	. RESERVOIR ASSY, hydraulic system No. 1 (see Sep. Publ. whn avail.) *(see fig. 127)*	1	6831-
			Attaching Parts		
	NAS1104-2		. BOLT (80205)	3	
-112	776026-59		TUBE ASSY, system No. 1 hydraulic pressure *(see fig. 123 for reqd)*	REF	
-113	776026-97		TUBE ASSY, system No. 1 hydraulic return *(see fig. 123 for reqd)*	REF	
-114	776435-31		TUBE ASSY, system No. 2 hydraulic pressure *(see fig. 123 for reqd)*	REF	
-115	776026-95		TUBE ASSY, system No. 2 hydraulic return *(see fig. 123 for reqd)*	REF	
-116	763382-3		TUBE ASSY, system No. 2 hydraulic pressure LH *(see fig. 11 for reqd)*	REF	
-117	763382-13		TUBE ASSY, system No. 2 hydraulic return LH *(see fig. 11 for reqd)*	REF	
-118	763382-15		TUBE ASSY, system No. 1 hydraulic return LH *(see fig. 11 for reqd)*	REF	
-119	763382-9		TUBE ASSY, system No. 2 hydraulic pressure LH *(see fig. 11 for reqd)*	REF	
-120	MS21909D6		TEE (96906) *(see fig. 128 for reqd)*	REF	
-121	ER834D080806		TEE (79470) *(see fig. 128 for reqd)*	REF	
-122	798178-101		SEPARATOR ASSY, air-oil (see T.O. 9H20-2-3) *(see fig. 123 for reqd)*	REF	
-123	798411-131		TUBE ASSY, system No. 1 hydraulic return *(see fig. 123 for reqd)*	REF	
-124	798411-139		TUBE ASSY, hydraulic reservoir relief *(see fig. 123 for reqd)*	REF	6701-6790
	798411-193		TUBE ASSY, hydraulic reservoir relief *(see fig. 123 for reqd)*	REF	6791-
-125	769828-1		CLAMPBLOCK ASSY, No. 3 tube support (match comp do not stk sep) *(see fig. 125 for reqd)*	REF	
	849552-101		HARNESS ASSY, generator No. 1 to T-63 thermal strip *(see fig. 192 for reqd)*	REF	6701-6765
	852066-101		HARNESS ASSY, generator No. 1 to T-63 thermal strip *(see fig. 192 for reqd)*	REF	6766-
-126	CA3106K10SL4S		. CONNECTOR, (P112) plug (AIM-7N generator thermal switch) (71468)	1	
-127	MS3108K10SL4S		. CONNECTOR, (P458) plug (AIM-7N generator shut-off valve) (96906)	1	6701-6765
	CA3108KE10SL4S		. CONNECTOR, (P458) plug (AIM-7N generator shut-off valve) (71468)	1	6766-
	MS3057-4A		. ADAPTER (96906)	2	

A - Only for AWX
B - Only for FB
C - Modified per AA.1F-104-OT-737 and Reqd AA.1F-104-OT-679A
D - Removed per AA.1F-104-OT-679A
E - Only for AWX - Modified per AA.1F-104S-OT-145A
F - Modified per AA.1F-104-OT-798
G - Only per partial incorporation of SPU system

Figura e particolare	NDR	1 2 3 4 5 6 7	DENOMINAZIONE	Quant.	Codice applicab.
			ENGINE COMPARTMENT PIPING AND EQUIPMENT FUSELAGE STATION 489 TO 539 RIGHT HAND		
123	851077-101	.	PLUMBING INSTL, RH engine compartment *(see fig. 114 for reqd)* . . .	REF	
- 1	776026-37	. .	TUBE ASSY, system No. 2 hydraulic pressure *(see fig. 124)* . . .	1	6701-6790; 6831-
- 2	776026-41	. .	TUBE ASSY, system No. 1 hydraulic pressure *(see fig. 124)* . . .	1	6701-6790; 6831-
- 3	776026-75	. .	TUBE ASSY, system No. 2 hydraulic return	1	6701-6790; 6831-
- 4	776026-81	. .	TUBE ASSY, system No. 2 hydraulic return *(see fig. 124)*	1	6701-6790; 6831-
- 5	776026-85	. .	TUBE ASSY, system No. 1 hydraulic return *(see fig. 124)*	1	6701-6790; 6831-
- 6	776026-105	. .	TUBE ASSY, system No. 2 hydraulic pressure *(see fig. 124)*. . . .	1	6701-6790; 6831-
- 7	776026-111	. .	TUBE ASSY, system No. 2 hydraulic return *(see fig. 124)*	1	6701-6790; 6831-
- 8	771567-115	. .	TUBE ASSY, system No. 2 hydraulic return *(see fig. 121)*	1	
- 9A	798411-127	. .	TUBE ASSY, system No. 2 hydraulic pressure *(see fig. 121)*. . . .	1	
- 9B	AS1006D08080404	. .	CROSS (79470)	1	
-10	785218-9	. .	TUBE ASSY, system No. 1 hydraulic pressure	1	
-11	785218-11	. .	TUBE ASSY, system No. 1 hydraulic pressure	1	6701-6790; 6831-
-12	785218-13	. .	TUBE ASSY, system No. 1 hydraulic return	1	6701-6790; 6831-
-13	785218-15	. .	TUBE ASSY, system No. 1 hydraulic return	1	
-14	785218-31	. .	TUBE ASSY, hydraulic pump drain *(see fig. 124)*	1	6701-6790; 6831-
-15	789861-19	. .	TUBE ASSY, system No. 2 hydraulic pump suction.	1	6701-6790; 6831-
-16	789861-21	. .	TUBE ASSY, hydraulic reservoir relief	1	6701-6790; 6831-
-17	785218-107	. .	TUBE ASSY, system No. 1 hydraulic return	1	6701-6790; 6831-
-18	789861-33	. .	TUBE ASSY, system No. 2 hydraulic pressure	1	6701-6790; 6831-
-19	789861-35	. .	TUBE ASSY, system No. 2 hydraulic pressure	1	6701-6790; 6831-
-20	789861-37	. .	TUBE ASSY, system No. 2 hydraulic pressure	1	6701-6790; 6831-
-21	789861-39	. .	TUBE ASSY, hydraulic reservoir relief	1	6701-6790; 6831-
-22A	798411-169	. .	TUBE ASSY, system No. 2 hydraulic return	1	
-22B	798411-125	. .	TUBE ASSY, system No. 2 hydraulic return	1	
-22C	798411-135	. .	TUBE ASSY, system No. 2 hydraulic return	1	6701-6790; 6831-
-22D	AS1005D080804	. .	TEE (79470).	1	
-22E	AS1005D080804	. .	TEE (79470).	1	6701-6790; 6831-
-23	798411-171	. .	TUBE ASSY, system No. 2 hydraulic return *(see fig. 121)*	1	6701-6790; 6831-
-24	789861-49	. .	TUBE ASSY, system No. 2 hydraulic return	1	6701-6790; 6831-
-24A	776026-17	. .	TUBE ASSY, system No. 2 hydraulic pressure	1	6701-6790; 6831-
-24B	P30-220	G. .	VALVE, hydraulic relief (91816) (Lockheed spec dwg 668413-1) . . .	1	
-25	AC1000-10	. .	FILTER ASSY, hydraulic oil (A0303) (01414) (Lockheed spec dwg 668284-1) (61430 is an alternate) (see T.O. 9H3-3-44-3)	1	
	61430	. .	FILTER ASSY, hydraulic oil (81321) (Lockheed spec dwg 668284-1) (alternate for AC1000-10) (see T.O. 9H3-3-73-3)	REF	
			Attaching Parts		
	NAS623-4-26	. .	SCREW (80205).	2	
	NAS43DD4-12	. .	SPACER (80205)	2	
-26	8LV486-10	G. .	VALVE, hydraulic low pressure relief (A2898) (26044) (Lockheed spec dwg 668451-1)	1	
-27	AS1003D201608	. .	TEE, bulkhead and universal (79470)	1	
-28	AS1003D201608	. .	TEE (79470).	1	
-29	AS1002D060808	. .	TEE (79470).	1	6701-6790; 6831-
-30	AS1001D080804	. .	TEE (79470).	1	
-31	AS1001D080806	. .	TEE (79470).	1	
-32	AS1005D060406	. .	TEE (79470).	2	
-33	MS21905D6	. .	TEE (96906).	5	
-34	MS21905D8	. .	TEE (96906).	1	
-35	751295-1	. .	FITTING, overboard drain	1	
-36	AS1008D1008	. .	ELBOW (79470).	1	
-37	MS21907D6	. .	ELBOW (96906).	2	
-38	MS21908D6	. .	ELBOW (96906).	2	
-39	AN924-6D	. .	NUT (88044)	4	
-39A	AN924-6D	. .	NUT (88044)	1	6701-6790; 6831-
-40	AN960D916	. .	WASHER (88044)	4	
-40A	AN960D916	. .	WASHER (88044)	1	6701-6790; 6831-
-41	MS21902D4	. .	UNION (96906)	1	
-42	MS21902D6	. .	UNION (96906)	1	
-42A	MS21902D6	. .	UNION (96906)	1	6701-6790; 6831-
-43	MS21902D8	. .	UNION (96906)	1	6701-6790; 6831-

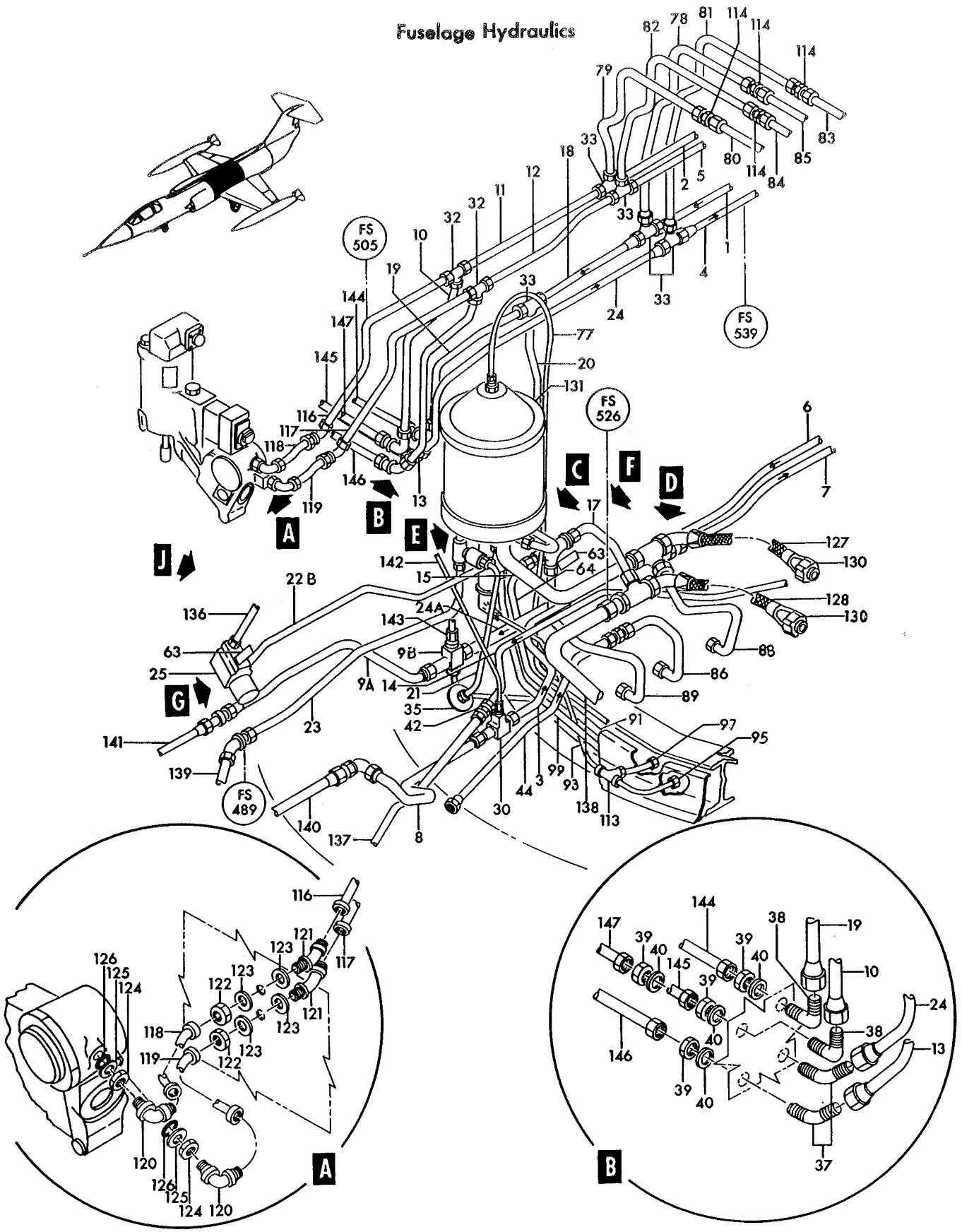

Figure 123— Engine Compartment Piping and Equipment Fuselage Station 489 to 539 Right Hand (Sheet 1 of 3)

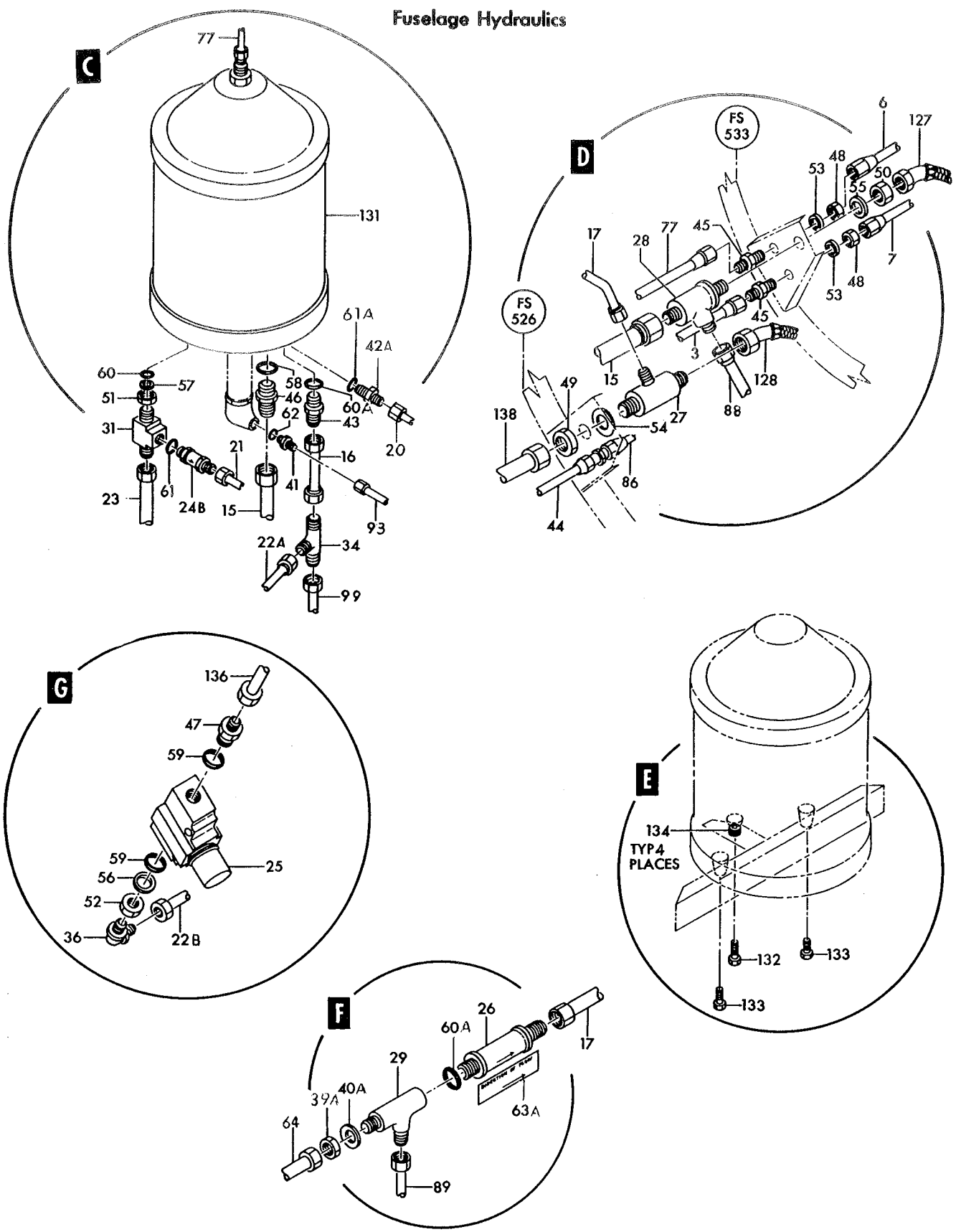

Figure 123— Engine Compartment Piping and Equipment Fuselage Station 489 to 539 Right Hand (Sheet 2 of 3)

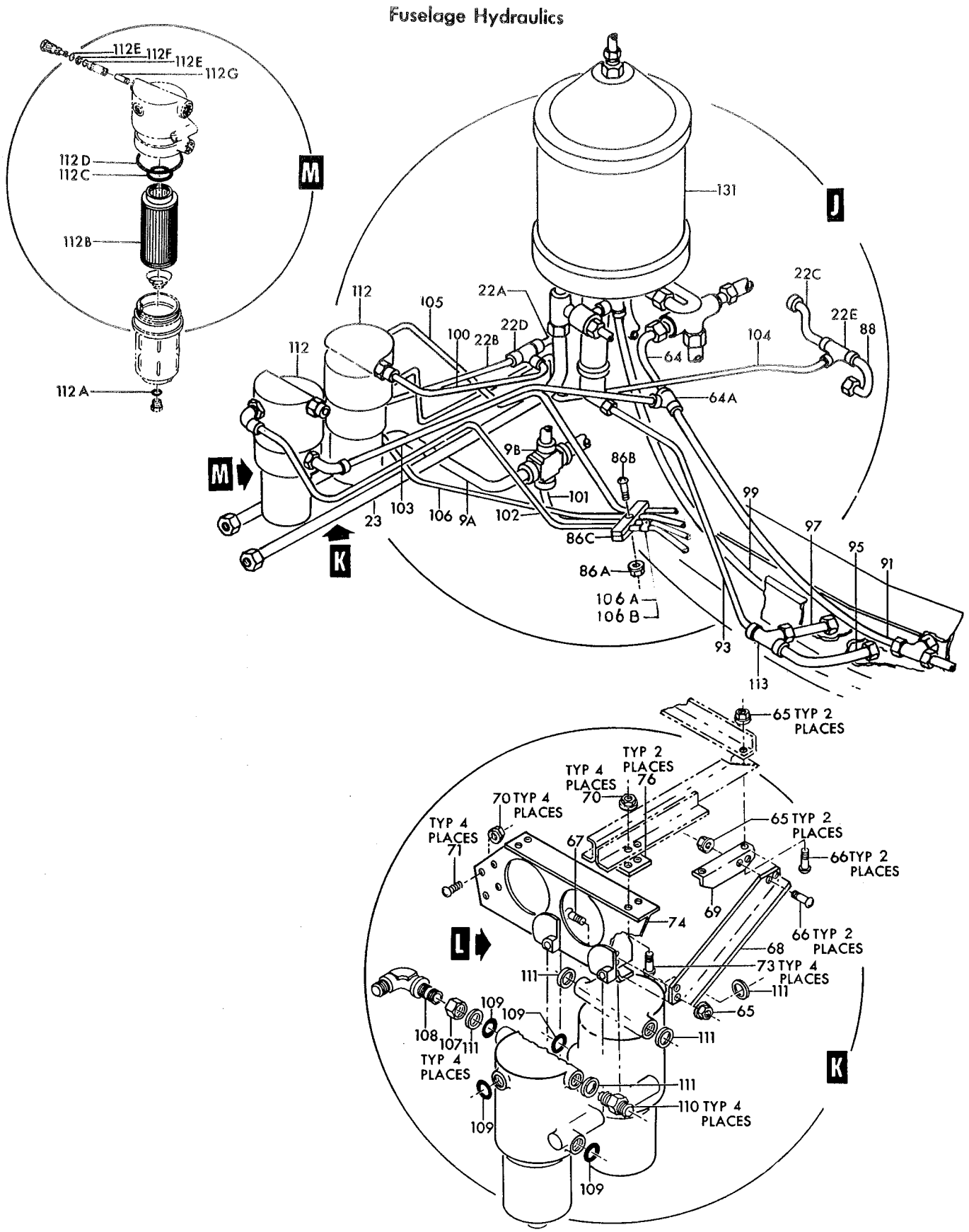

Figure 123— Engine Compartment Piping and Equipment Fuselage Station 489 to 539 Right Hand (Sheet 3 of 3)

Figura e particolare	NDR	1	2	3	4	5	6	7	DENOMINAZIONE	Quant.	Codice applicab.
123-44	776026-29								TUBE ASSY, emergency pump pressure *(see fig. 127)*	1	6701-6790; 6831-
-45	MS21924D8								UNION (96906)	2	6701-6790; 6831-
-46	MS21902D16								UNION (96906)	1	
-47	MS21916D10-8								REDUCER (96906)	1	
-48	AN924-8D								NUT (88044)	2	6701-6790; 6831-
-49	AN924-20D								NUT (88044)	1	
-50	AN924-20D								NUT (88044)	1	
-51	AN6289D8								NUT (88044)	1	
-52	AN6289D10								NUT (88044)	1	
-53	AN960D1216								WASHER (88044)	2	6701-6790; 6831-
-54	AN960D2616								WASHER (88044)	1	
-55	AN960D2616								WASHER (88044)	1	
-56	LS4764-10								RING, teflon hydraulic backup (36659)	1	
-57	LS4764-8								RING, teflon hydraulic backup (36659)	1	
-58	LS4634-16								GASKET, boss straight thread tube fitting (36659) (whn exh use NAS1596-16)	1	
	NAS1596-16								PACKING (80205) (use LS4634-16 until exh)	REF	
-59	LS4634-10								GASKET, boss straight thread tube fitting (36659) (whn exh use NAS1596-10)	2	
	NAS1596-10								PACKING (80205) (use LS4634-10 until exh)	REF	
-60	LS4634-8								GASKET, boss straight thread tube fitting (36659) (whn exh use NAS1596-8)	1	
-60A	LS4634-8								GASKET, boss straight thread tube fitting (36659) (whn exh use NAS 1596-8)	2	6701-6790; 6831-
	NAS1596-8								PACKING (80205) (use LS4634-8 until exh)	REF	
-61	LS4634-6								GASKET, boss straight thread tube fitting (36659) (whn exh use NAS1596-6)	1	
-61A	LS4634-6								GASKET, boss straight thread tube fitting (36659) (whn exh use NAS 1596-6)	1	6701-6790; 6831-
	NAS1596-6								PACKING (80205) (use LS4634-6 until exh)	REF	
-62	LS4634-4								GASKET, boss straight thread tube fitting (36659) (whn exh use NAS1596-4)	1	
	NAS1596-4								PACKING (80205) (use LS4634-4 until exh)	REF	
-63	771665-1								DECAL, direction of flow	1	
-63A	771665-1								DECAL, direction of flow	1	6701-6790; 6831-
-64	798411-129								TUBE ASSY, system No. 1 hydraulic return	1	6701-6790; 6831-
-64A	AS1005D060604								TEE (79470)	1	
-65	MS21042L3								NUT (96906)	5	
-66	NAS623-3-2								SCREW (80205)	4	
-67	NAS517-3-2								SCREW (80205)	1	
-68	798235-101								BRACE, air-oil separator support	1	
-69	798279-101								SUPPORT, firewall air-oil separator brace	1	
-70	MS21042L3								NUT (96906)	4	
-71	NAS623-3-2								SCREW (80205)	4	
-73	NAS623-3-4								SCREW (80205)	4	
-74	798236-101								SUPPORT ASSY, air-oil separator	1	
-76	798306-101								SPACER, support air-oil separator	2	
	851077-103								PLUMBING INSTL, RH engine compartment *(see fig. 114 for reqd)*	REF	
-77	765337-47								TUBE ASSY, system No. 2 hydraulic fluid level indicating system *(see fig. 128)*	1	6701-6790; 6831-
-78	776026-51								TUBE ASSY, system No. 2 hydraulic pressure	1	6701-6790; 6831-
-79	776026-53								TUBE ASSY, system No. 1 hydraulic pressure	1	6701-6790; 6831-
-80	776026-59								TUBE ASSY, system No. 1 hydraulic pressure *(see fig. 122)*	1	
-81	776026-87								TUBE ASSY, system No. 2 hydraulic return	1	6701-6790; 6831-
-82	776026-89								TUBE ASSY, system No. 2 hydraulic return	1	6701-6790; 6831-
-83	776026-95								TUBE ASSY, system No. 2 hydraulic return *(see fig. 122)*	1	
-84	776026-97								TUBE ASSY, system No. 1 hydraulic return *(see fig. 122)*	1	
-85	776435-31								TUBE ASSY, system No. 2 hydraulic pressure *(see fig. 122)*	1	
-86	776435-39								TUBE ASSY, emergency pump pressure *(see fig. 127 and 131)*	1	6701-6790; 6831-
-86A	MS21042L3								NUT (96906)	1	
-86B	NAS603-12								SCREW (80205)	1	
-86C	769828-1								CLAMPBLOCK ASSY, No. 3 tube support (match comp do not stk sep)	1	
-88	798411-133								TUBE ASSY, system No. 2 hydraulic return *(see fig. 131)*	1	6701-6790; 6831-
-89	789861-23								TUBE ASSY, system No. 1 hydraulic return *(see fig. 131)*	1	6701-6790; 6831-
-91	798411-131								TUBE ASSY, system No. 1 hydraulic return *(see fig. 122)*	1	
-93	798411-143								TUBE ASSY, system No. 2 reservoir pressure	1	6701-6790; 6831-
-95	798411-145								TUBE ASSY, hydraulic reservoir bleed *(see fig. 128)*	1	
-97	798411-141								TUBE ASSY, system No. 2 reservoir pressure *(see fig. 128)*	1	
-99	798411-139								TUBE ASSY, hydraulic reservoir relief *(see fig. 122)*	1	6701-6790
	798411-193								TUBE ASSY, hydraulic reservoir relief *(see fig. 122)*	1	6791-

Figura e particolare	NDR	1	2	3	4	5	6	7	DENOMINAZIONE	Quant.	Codice applicab.
123-100	798411-105								TUBE ASSY, system No. 2 hydraulic return	1	6701-6790; 6831-
-101	798411-103								TUBE ASSY, system No. 2 hydraulic pressure *(see fig. 128)*	1	
-102	798411-121								TUBE ASSY, system No. 1 separator bleed *(see fig. 128)*	1	
-103	798411-119								TUBE ASSY, system No. 1 hydraulic return	1	6701-6790; 6831-
-104	798411-107								TUBE ASSY, system No. 2 hydraulic return	1	6701-6790; 6831-
-105	798411-109								TUBE ASSY, system No. 2 separator bleed *(see fig. 128)*	1	
-106	798411-101								TUBE ASSY, system No. 2 hydraulic pressure *(see fig. 128)*	1	
-106A	TA4C74S8T	A.							CLAMP (84971)	2	
									Attaching Parts		
-106B	AN520-10R8	A.							SCREW (88044)	1	
	MS21042L3	A.							NUT (96906)	1	
-107	AN6289D4								NUT (88044)	4	
-108	MS21908D4								ELBOW (96906)	4	
-109	LS4764-4								RING, teflon hydraulic backup (36659)	4	
-110	MS21902D4								UNION (96906)	4	
-111	LS4634-4								GASKET, boss straight thread tube fitting (36659) (whn exh use NAS1596-4)	8	
	NAS1596-4								PACKING (80205) (use LS4634-4 until exh)	REF	
-112	798178-101								SEPARATOR ASSY, air-oil (see T.O. 9H20-2-3) *(see fig. 122)*	2	
									Attaching Parts		
	NAS1104-94								BOLT (80205)	2	
	AN960D416								WASHER (88044)	2	
	MS21042L4								NUT (96906)	2	
									Partial Breakdown Follows		
-112A	LS4634-3								GASKET, boss straight thread tube fitting (36659) (whn exh use NAS1596-3)	1	
	NAS1596-3								PACKING (80205) (use LS4634-3 until exh)	REF	
-112B	AB10-1315E129								FILTER ELEMENT, hydraulic fluid 10-micron (01414) (Lockheed spec dwg 740133-101) (AAE701032 and 7501623 is an alternate)	1	
	AAE701032								FILTER ELEMENT, hydraulic fluid 10-micron (35076) (Lockheed spec dwg 740133-101) (alternate for AB10-1315E129 and 7501623)	REF	
	7501623								FILTER ELEMENT, hydraulic fluid 10-micron (05228) (Lockheed spec dwg 740133-101) (alternate for AB10-1315E129 and AAE701032)	REF	
-112C	MS28775-214								PACKING (96906)	1	
-112D	MS28775-231								PACKING (96906)	1	
-112E	MS28775-012								PACKING (96906)	2	
-112F	LS4565-7								GASKET, teflon backup packing (36659)	1	
-112G	7501247								FILTER ELEMENT (81321)	1	
-113	MS21905D4								TEE (96906)	1	
-114	MS21902D6								UNION (96906)	4	
	785246-1								PLUMBING INSTL, autopilot aileron actuator *(see fig. 115 for reqd)*	REF	
-116	785218-1								TUBE ASSY, system No. 1 hydraulic pressure	1	
-117	785218-3								TUBE ASSY, system No. 1 hydraulic return	1	
-118	785218-49								TUBE ASSY, system No. 1 hydraulic pressure	1	
-119	785218-7								TUBE ASSY, system No. 1 hydraulic return	1	
-120	MS21908D4								ELBOW (96906)	2	
-121	MS21907D4								ELBOW (96906)	2	
-122	AN924-4D								NUT (88044)	2	
-123	AN960D716								WASHER (88044)	4	
-124	AN6289D4								NUT (88044)	2	
-125	LS4764-4								RING, teflon hydraulic backup (36659)	2	
-126	LS4634-4								GASKET, boss straight thread tube fitting (36659) (whn exh use NAS1596-4)	2	
	NAS1596-4								PACKING (80205) (use LS4634-4 until exh)	REF	
	851077-105								HOSE INSTL, RH engine compartment (NHA 849071-101)	1	
-127	R9836-20-0280-108								HOSE ASSY, hydraulic (No. 2 pump suction) (50599) *(see fig. 245)*	1	6701-6790; 6831-
-128	R4705E0350L087								HOSE ASSY, hydraulic (No. 1 pump suction) (50599) *(see fig. 245)*	1	6701-6790; 6831-

Figura e particolare	NDR	1 2 3 4 5 6 7 DENOMINAZIONE	Quant.	Codice applicab.
123-130	370503-20	G. . COUPLING HALF, female quick disconnect (00624) (Lockheed spec dwg 668430-11) *(see fig. 124A)*	2	
		Partial Breakdown Follows		
	21014-24	. . . RING (00624)	1	
	22558-133	. . . PACKING (00624)	1	
	789390-103	. RESERVOIR INSTL, No. 2 main hydraulic system *(see fig. 114 for reqd)* . .	REF	6701-6790; 6831-
	852727-101	F. RESERVOIR INSTL, No. 2 main hydraulic system *(see fig. 114 for reqd)* .	REF	6791-6830
-131	789366-103	B. . RESERVOIR ASSY, hydraulic system No. 2 piston (Modified and reidentified to 789366-109 per AA.1F-104-OT-679A) (see T.O. 9H5-3-34-3) .	1	6701-6776
	789366-109	C. . RESERVOIR ASSY, hydraulic system No. 2 piston (Supersedes 789366-103 per AA.1F-104-OT-679A) (see T.O. 9H5-3-34-3)	1	6777-6790
	852720-103	F. . RESERVOIR ASSY, hydraulic system No. 2 piston (see T.O. whn avail.)	1	6791-6830
	789366-121	E. . RESERVOIR ASSY, hydraulic system No. 2 piston (see Sep. T.O. whn avail.)	1	6831-
		Attaching Parts		
-132	NAS1104-6	. . BOLT (80205)	1	
-133	NAS1104-2	. . BOLT (80205)	2	
-134	AN960D416	. . WASHER (88044)	4	
	782072-5	. ACTUATOR ASSY, autopilot servo aileron (see T.O. 9H2-5-171-4) *(see fig 73 for reqd)*	REF	
-136	850962-125	. TUBE ASSY, system No. 1 hydraulic return *(see fig 122 for reqd)* . . .	REF	
-137	850962-137	. TUBE ASSY, hydraulic pump drain *(see fig. 122 for reqd)*	REF	6701-6790; 6831-
-138	850962-101	. TUBE ASSY, system No. 1 hydraulic pump suction *(see fig. 122 for reqd)* .	REF	6701-6790; 6831-
-139	785218-59	. TUBE ASSY, system No. 2 hydraulic return *(see fig. 121 for reqd)* . . .	REF	
-140	770029-63	. TUBE ASSY, system No. 2 hydraulic return *(see fig. 121 for reqd)* . . .	REF	
-141	785124-11	. TUBE ASSY, system No. 2 hydraulic pressure *(see fig. 121 for reqd)* . .	REF	
-142	798411-157	D. TUBE ASSY, system No. 2 hydraulic return *(see fig 125 for reqd)* . . .	REF	
-143	798411-161	D. TUBE ASSY, system No. 2 hydraulic pressure *(see fig. 125 for reqd)* . .	REF	
-144	763382-6	. TUBE ASSY, system No. 2 hydraulic pressure RH *(see fig. 11 for reqd)* . .	REF	
-145	763382-11	. TUBE ASSY, system No. 2 hydraulic return RH *(see fig. 11 for reqd)* . .	REF	
-146	763382-17	. TUBE ASSY, system No. 1 hydraulic return RH *(see fig. 11 for reqd)* . .	REF	
-147	763382-8	. TUBE ASSY, system No. 1 hydraulic pressure RH *(see fig. 11 for reqd)* . .	REF	

A - Reqd per AA.1F-104S-OT-106
B - Removed per AA.1F-104-OT-679A
C - Reqd per AA.1F-104-OT-679A
D - Removed per AA.1F-104S-OT-138
E - Modified per AA.1F-104-OT-798
F - Only per partial incorporation of SPU system
G - All parts marked with letter G serve also to install partial incorporation of SPU system

Figura e particolare	NDR	1 2 3 4 5 6 7 DENOMINAZIONE	Quant.	Codice applicab.
123A		ENGINE COMPARTMENT PIPING AND EQUIPMENT FUSELAGE STATION 489 TO 600 LEFT HAND		
	FL0925-101	A. PLUMBING INSTL, LH engine compartment	1	6791-6830
-1	765337-141	A. . TUBE ASSY, system No. 1 hydraulic fluid level indicating system	1	6791-6830
-2	852716-143	A. . TUBE ASSY, hydraulic reservoir relief	1	6791-6830
-3	852716-145	A. . TUBE ASSY, hydraulic reservoir relief	1	6791-6830
-4	AS1005D080806	A. . TEE (79470)	1	6791-6830
-5	852717-179	A. . TUBE ASSY, system No. 1 hydraulic pump suction	1	6791-6830
-6	852716-147	A. . TUBE ASSY, system No. 2 hydraulic pump drain	1	6791-6830
-7	852716-149	A. . TUBE ASSY, system No. 1 hydraulic pump drain	1	6791-6830
-8	MS21905D6	A. . TEE (96906)	2	6791-6830
-9	852716-131	A. . TUBE ASSY, system No. 1 hydraulic return	1	6791-6830
-10	852716-133	A. . TUBE ASSY, system No. 2 hydraulic return	1	6791-6830
-11	MS21914-6D	A. . CAP (96906)	1	6791-6830
-12	852716-175	A. . TUBE ASSY, system No. 1 hydraulic pressure	1	6791-6830
-13	852716-135	A. . TUBE ASSY, system No. 2 hydraulic pressure	1	6791-6830
-14	852716-137	A. . TUBE ASSY, system No. 2 hydraulic pressure	1	6791-6830
-15	852716-141	A. . TUBE ASSY, system No. 1 hydraulic pressure	1	6791-6830
-16	852716-139	A. . TUBE ASSY, system No. 2 hydraulic pressure	1	6791-6830
-17	MS21916D10-6	A. . REDUCER (96906)	1	6791-6830
-18	NAS1596-10	A. . PACKING (80205)	1	6791-6830
	852755-101	A. . VALVE INSTL, shutoff	1	6791-6830
-19	V226004	A. . . VALVE, solenoid operated hydraulic shutoff (98315) (Lockheed spec dwg 668426-5) (see T.O. 9H8-4-154-3)	1	6791-6830
		Attaching Parts		
-20	NAS623-3-2	A. . . SCREW (80205)	2	6791-6830
-21	AN960-10L	A. . . WASHER (88044)	2	6791-6830
-22	MS21902D6	A. . . UNION (96906)	1	6791-6830
-23	MS21912D6	A. . . TEE (96906)	1	6791-6830
-24	NAS1596-6	A. . . PACKING (80205)	2	6791-6830
-25	LS4764-6	A. . . RING, teflon hydraulic backup (36659)	1	6791-6830
-26	AN6289D6	A. . . NUT (88044)	1	6791-6830
-27	852756-101	A. . . BRACKET, shutoff valve	1	6791-6830
-28	852376-101	A. . UNION, hydraulic pump No. 1 and No. 2	2	6791-6830
-29	AN941D6	A. . ELBOW (88044)	2	6791-6830
-30	NAS1596-6	A. . PACKING (80205)	2	6791-6830
-31	AN960D916	A. . WASHER (88044)	2	6791-6830
-32	AN924-6D	A. . NUT (88044)	2	6791-6830
-33	852717-103	A. . TUBE ASSY, system No. 2 hydraulic pressure	1	6791-6830
-34	852717-157	A. . TUBE ASSY, system No. 1 hydraulic pressure *(see fig. 124A for reqd)*	REF	6791-6830
-35	AS1008D1006	A. . ELBOW (79470)	1	6791-6830
-36	NAS1596-10	A. . PACKING (80205)	1	6791-6830
-37	LS4764-10	A. . RING, teflon hydraulic backup (36659)	1	6791-6830
-38	AN6289D10	A. . NUT (88044)	1	6791-6830
-39	852716-153	A. . TUBE ASSY, system No. 1 reservoir pressure	1	6791-6830
-40	852716-155	A. . TUBE ASSY, hydraulic reservoir pressure	1	6791-6830
-41	AS1008D0806	A. . ELBOW (79470)	1	6791-6830
-42	330202-6	. . COUPLING HALF, quick disconnect female (00624) (Lockheed spec dwg 668429-3) *(see fig. 124 for reqd)*	REF	
-43	3305-6	. . COUPLING HALF, quick disconnect female (00624) (Lockheed spec dwg 668430-3) *(see fig. 245 for reqd)*	REF	
-44	70B116	. . VALVE, quick operating globe air bleed (71503) (Lockheed spec dwg 668063) (see T.O. 9H8-4-93-3) *(see fig. 128 for reqd)*	REF	
-45	G1673	. . GAGE, dial indicating pressure (03936) (Lockheed spec dwg 626202-1) *(see fig. 128 for reqd)*	REF	
-46	AC1000-10	. . FILTER ASSY, hydraulic oil (A0303) (01414) (Lockheed spec dwg 668284-1) (61430 is an alternate) (see T.O. 9H3-3-44-3) *(see fig. 124 for reqd)*	REF	

Figura e particolare	NDR	1	2	3	4	5	6	7	DENOMINAZIONE	Quant.	Codice applicab.
123A-47	AC1000-10	A.							FILTER ASSY, hydraulic oil (A0303) (01414) (Lockheed spec dwg 668284-1) (61430 is an alternate) (see T.O. 9H3-3-44-3)	1	6791-6830
	61430	A.							FILTER ASSY, hydraulic oil (81321) (Lockheed spec dwg 668284-1) (Alternate for AC1000-10) (see T.O. 9H3-3-73-3)	REF	6791-6830
									Attaching Parts		
	NAS623-4-70	A.							SCREW (80205)	2	6791-6830
	AN960D416	A.							WASHER (88044)	2	6791-6830
	NAS43DD4-34	A.							SPACER (80205)	2	6791-6830
	NAS43DD4-66	A.							SPACER (80205)	2	6791-6830
									*		
-48	852735-101	A.							SUPPORT, hydraulic filter	1	6791-6830

A - Only per partial incorporation of SPU system

Figura e particolare	NDR	1 2 3 4 5 6 7 DENOMINAZIONE	Quant.	Codice applicab.
124		ENGINE COMPARTMENT PIPING AND EQUIPMENT FUSELAGE STATION 539 TO 600 RIGHT HAND		
	851077-101	PLUMBING INSTL, RH engine compartment *(see fig. 114 for reqd)*	REF	
- 1	776026-37	TUBE ASSY, system No. 2 hydraulic pressure *(see fig. 123 for reqd)*	REF	6701-6790; 6831-
- 2	776026-41	TUBE ASSY, system No. 1 hydraulic pressure *(see fig. 123 for reqd)*	REF	6701-6790; 6831-
- 3	776026-81	TUBE ASSY, system No. 2 hydraulic return *(see fig. 123 for reqd)*	REF	6701-6790; 6831-
- 4	776026-85	TUBE ASSY, system No. 1 hydraulic return *(see fig. 123 for reqd)*	REF	6701-6790; 6831-
- 5	776026-105	TUBE ASSY, system No. 2 hydraulic pressure *(see fig. 123 for reqd)*	REF	6701-6790; 6831-
- 5A	776026-19	TUBE ASSY dive flap down *(see fig. 126 for reqd)*	REF	6701-6790; 6831-
- 6	776026-111	TUBE ASSY, system No. 2 hydraulic return *(see fig. 123 for reqd)*	REF	6701-6790; 6831-
- 6A	TA4C69S8T	E. CLAMP (84971)	2	
		Attaching Parts		
- 6B	NAS603-8	E. SCREW (80205)	1	
	MS21042L3	E. NUT (96906)	1	
		*		
- 7	785218-31	TUBE ASSY, hydraulic pump drain *(see fig. 123 for reqd)*	REF	6701-6790; 6831-
- 8	771567-99	TUBE ASSY, system No. 2 hydraulic pressure	1	6701-6790; 6831-
- 9	776026-31	TUBE ASSY system No. 1 hydraulic return	1	6701-6790; 6831-
-10	776026-79	TUBE ASSY, system No. 2 hydraulic return	1	6701-6790; 6831-
-11	776026-107	TUBE ASSY, system No. 2 hydraulic return	1	6701-6790; 6831-
-12	785218-111	TUBE ASSY system No. 1 hydraulic pressure	1	6701-6790; 6831-
-12A	785218-119	TUBE ASSY, system No. 1 hydraulic pressure	1	6701-6790; 6831-
-12B	785218-121	TUBE ASSY, system No. 1 hydraulic pressure	1	6701-6790; 6831-
-12C	AS1005-080806	TEE (79470)	1	6701-6790; 6831-
-13	785218-27	TUBE ASSY, system No. 2 hydraulic pressure *(see fig. 246)*	1	6701-6790; 6831-
-14	785218-117	TUBE ASSY, system No. 2 hydraulic pressure	1	6701-6790; 6831-
-15	785218-45	TUBE ASSY, system No. 2 hydraulic pressure	1	6701-6790; 6831-
-16	785218-51	TUBE ASSY, system No. 2 hydraulic pressure	1	6701-6790; 6831-
-17	4CV4612	G. VALVE, hydraulic check (A2898) (26044) (Lockheed spec dwg 668053-3) (see T.O. 9H8-6-74-4)	1	
		Partial Breakdown Follows		
	LS4634-6	G. GASKET, boss straight thread tube fitting (36659) (whn exh use NAS1596-6)	1	
	NAS1596-6	G. PACKING (80205) (use LS4634-6 until exh)	REF	
	4CVS62	G. SPRING, hydraulic check valve (26044)	1	
	4CVP62	G. POPPET, hydraulic check valve (26044)	1	
-18	4CV483	G. VALVE, hydraulic check (A2898) (26044) (Lockheed spec dwg 668054-3) (see T.O. 9H8-6-74-4)	1	
		Partial Breakdown Follows		
	LS4634-8	G. GASKET, boss straight thread tube fitting (36659) (whn exh use NAS1596-8)	1	
	NAS1596-8	G. PACKING (80205) (use LS4634-8 until exh)	REF	
	4CVS63	G. SPRING, hydraulic check valve (26044)	1	
	4CVP63	G. POPPET, hydraulic check valve (26044)	1	
-20	AC1000-10	G. FILTER ASSY, hydraulic oil (A0303) (01414) (Lockheed spec dwg 668284-1) (61430 is an alternate) (see T.O. 9H3-3-44-3) *(see fig. 123)*	1	
	61430	G. FILTER ASSY, hydraulic oil (81321) (Lockheed spec dwg 668284-1) (Alternate for AC1000-10) (see T.O. 9H3-3-73-3)	REF	
		Attaching Parts		
	NAS623-4-32	SCREW (80205)	2	6701-6790; 6831-
	NAS43DD4-36	SPACER (80205)	2	6701-6790; 6831-
		*		
-21	V226004	G. VALVE, (L14), solenoid operated hydraulic shutoff (98315) (Lockheed spec dwg 668426-5) (see T.O. 9H8-4-154-3)	1	
		Attaching Parts		
	NAS623-3-2	G. SCREW (80205)	2	
	AN960D10L	G. WASHER (88044)	2	
		*		
-22	4CV4125-1	G. VALVE, pump check (A2898) (26044) (Lockheed spec dwg 668436-1) (see T.O. 9H8-6-74-4)	2	

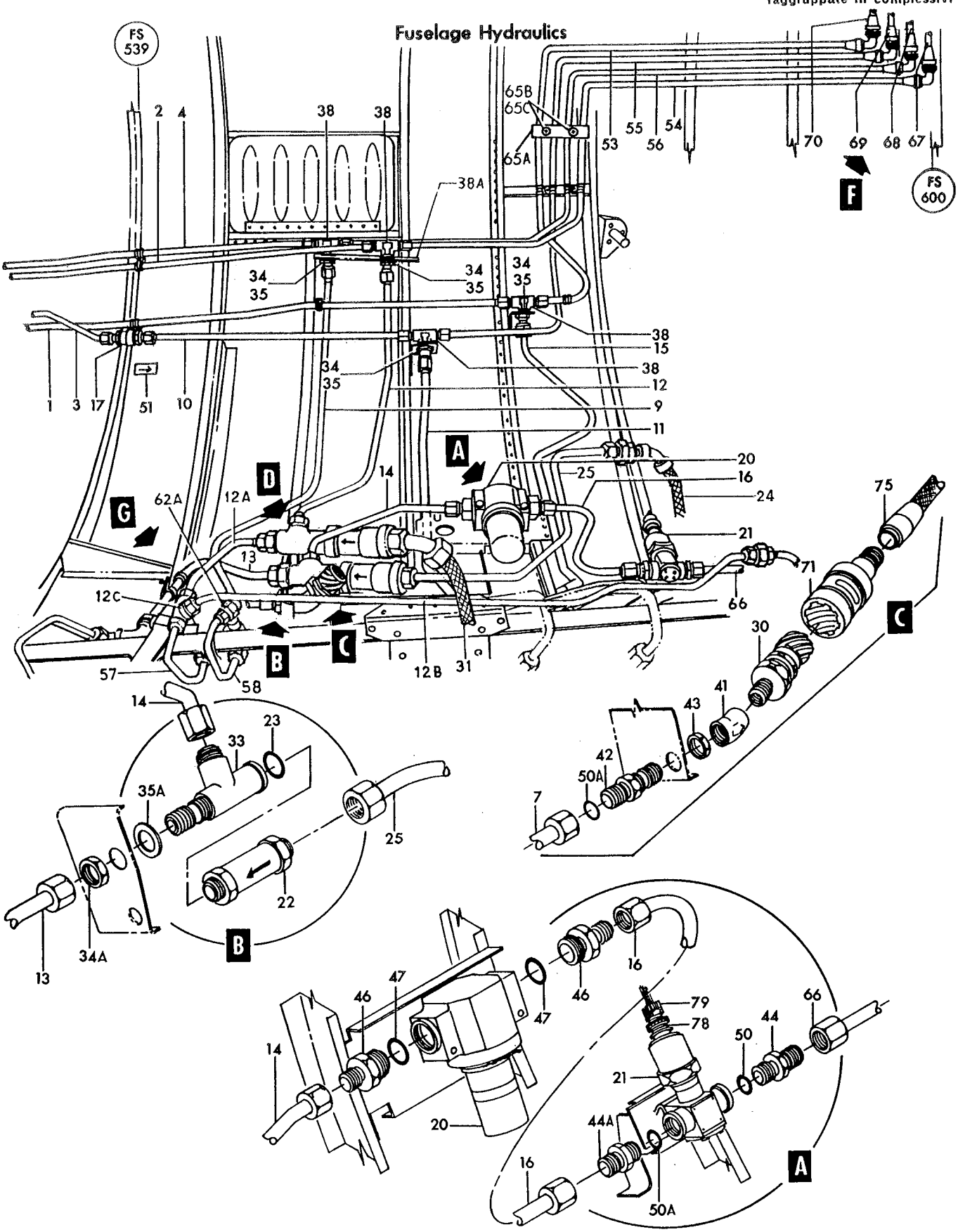

Figure 124— Engine Compartment Piping and Equipment Fuselage Station 539 to 600 Right Hand (Sheet 1 of 2)

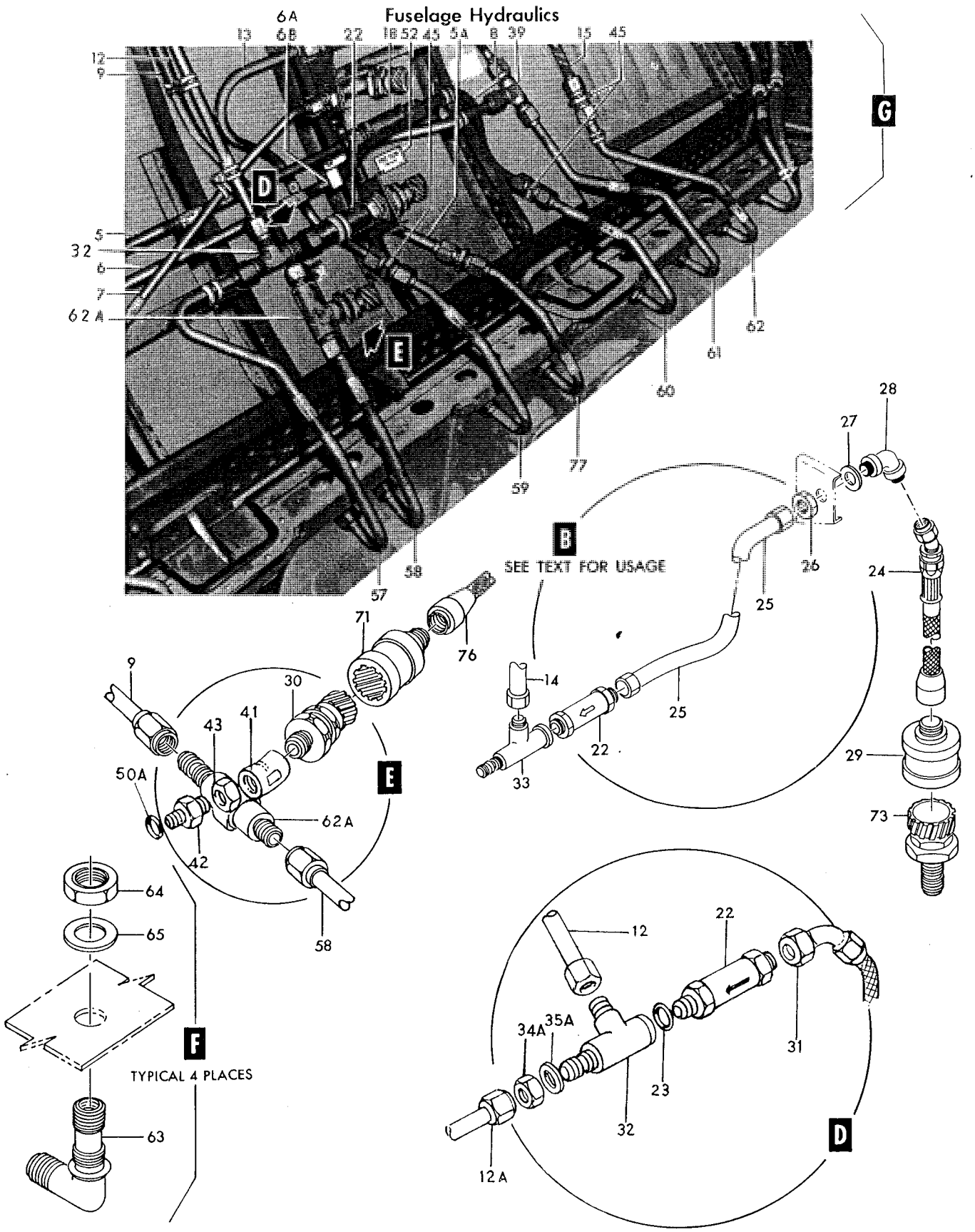

Figure 124— Engine Compartment Piping and Equipment Fuselage Station 539 to 600 Right Hand (Sheet 2 of 2)

Figura e particolare	NDR	1	2	3	4	5	6	7	DENOMINAZIONE	Quant.	Codice applicab.
124									Partial Breakdown Follows		
	AN6290-12	G.			.				PACKING (88044)	1	
	4CVS65	G.			.				SPRING, pump check valve (26044)	1	
	4CVP65	G.			.				POPPET, pump check valve (26044)	1	
-23	LS4634-12			.					GASKET, boss straight thread tube fitting (36659) (whn exh use NAS1596-12)	2	6701-6790; 6831-
	NAS1596-12			.					PACKING (80205) (use LS4634-12 until exh)	REF	6701-6790; 6831-
-24	R395805-12-0254			.					HOSE ASSY, hydraulic (system No. 2 hydraulic pump pressure) (50599) (NHA 851077-105)	1	6701-6790; 6831-
-25	771567-113			.					TUBE ASSY, system No. 2 hydraulic pressure	1	6701-6790; 6831-
-26	AN924-12D			.					NUT (88044)	1	6701-6790; 6831-
-27	AN960D716			.					WASHER (88044)	1	6701-6790; 6831-
-28	MS21907D12			.					ELBOW (96906)	1	6701-6790; 6831-
-29	3305-12			.					COUPLING HALF, quick disconnect female (00624) (Lockheed spec dwg 668430-7) (NHA 851077-105)	1	
	3301-12			.	.				COUPLING HALF, quick disconnect female (00624)	1	
									Partial Breakdown Follows		
	22558-214			.	.	.			PACKING (00624)	1	
	22559-214			.	.	.			GASKET (00624)	1	
-30	330202-6	G.		.					COUPLING HALF, quick disconnect female (00624) (Lockheed spec dwg 668429-3) *(see fig. 245)*	2	
-31	R4724D0197H051			.					HOSE ASSY, hydraulic (system No. 1 hydraulic pump pressure) (50599) (NHA 851077-105)	1	6701-6790; 6831-
									Partial Breakdown Follows		
	MS28774-018			.	.				RING (96906)	1	
	MS28775-018			.	.				PACKING (96906)	1	
	MS28774-112			.	.				RING (96906)	1	
	MS28775-112			.	.				PACKING (96906)	1	
-32	AS1002-081208			.	.				TEE (79470)	1	6701-6790; 6831-
-33	AS1002-081206			.	.				TEE (79470)	1	6701-6790; 6831-
-34	AN924-8D			.	.				NUT (88044)	4	
-34A	AN924-8D			.	.				NUT (88044)	2	6701-6790; 6831-
-35	AN960D1216			.	.				WASHER (88044)	4	
-35A	AN960D1216			.	.				WASHER (88044)	2	6701-6790; 6831-
-38	AS1009D060608			.	.				TEE (79470)	4	
-38A	763242	C.		.	.				BRACKET, SYS No. 1 hydraulic bhd fitting	1	6701-6740
	763242-101	D.		.	.				BRACKET, SYS No. 1 hydraulic bhd fitting	1	
-39	MS21905D8			.	.				TEE (96906)	1	
-41	AN941D6			.	.				ELBOW (88044)	2	6701-6790; 6831-
-42	MS21924D6			.	.				UNION (96906)	2	6701-6790; 6831-
-43	AN924-6D			.	.				NUT (88044)	2	6701-6790; 6831-
-44	MS21902-6			.	.				UNION (96906)	1	
-44A	MS21902-6			.	.				UNION (96906)	1	6701-6790; 6831-
-45	MS21902D8			.	.				UNION (96906)	3	
-46	MS21916-10-6			.	.				REDUCER (96906)	2	6701-6790; 6831-
-47	LS4634-10			.	.				GASKET, boss straight thread tube fitting (36659) (whn exh use NAS1596-10)	2	6701-6790; 6831-
	NAS1596-10			.	.				PACKING (80205) (use LS4634-10 until exh)	REF	6701-6790; 6831-
-50	LS4634-6			.	.				GASKET, boss straight thread tube fitting (36659) (whn exh use NAS1596-6)	1	
-50A	LS4634-6			.	.				GASKET, boss straight thread tube fitting (36659) (whn exh use NAS1596-6)	3	6701-6790; 6831;
	NAS1596-6			.	.				PACKING (80205) (use LS4634-6 until exh)	REF	
-51	771668-1			.	.				DECAL, free flow	1	6701-6790; 6831-
-52	771667-1			.	.				DECAL, free flow	1	
	851077-103			.					PLUMBING INSTL, RH engine compartment *(see fig. 114 for reqd)*	REF	
-53	776026-35			.	.				TUBE ASSY, system No. 2 hydraulic pressure	1	6701-6790; 6831-
-54	776026-39			.	.				TUBE ASSY, system No. 1 hydraulic pressure	1	
-55	776026-77			.	.				TUBE ASSY, system No. 2 hydraulic return	1	
-56	776026-83			.	.				TUBE ASSY, system No. 1 hydraulic return	1	
-57	785218-109			.	.				TUBE ASSY, system No. 1 hydraulic pressure *(see fig. 131)*	1	6701-6790; 6831-
-58	785218-113			.	.				TUBE ASSY, system No. 1 hydraulic return *(see fig. 131)*	1	6701-6790; 6831-
-59	776435-47			.	.				TUBE ASSY, system No. 2 hydraulic pressure *(see fig. 131)*	1	6701-6790; 6831-
-60	776435-51			.	.				TUBE ASSY, system No. 2 hydraulic pressure *(see fig. 131)*	1	6701-6790; 6831-
-61	776435-53			.	.				TUBE ASSY, system No. 2 hydraulic return *(see fig. 131)*	1	6701-6790; 6831-
-62	785218-41			.	.				TUBE ASSY, system No. 2 hydraulic pressure *(see fig. 127)*	1	6701-6790; 6831-
-62A	MS21902D8			.	.				UNION (96906)	1	6701-6790; 6831-
-63	MS21908D6			.	.				ELBOW (96906)	4	

Figura e particolare	NDR	1 2 3 4 5 6 7 DENOMINAZIONE	Quant.	Codice applicab.
124-64	AN924-6D	. . NUT (88044)	4	
-65	AN960D916	. . WASHER (88044)	4	
	TA4C74S6T	A. . CLAMP (84971)	4	6701-6740
-65A	851057-101	B. . CLAMPBLOCK	1	
		Attaching Parts		
	NAS603-10	A. . SCREW (80205)	2	6701-6740
-65B	NAS603-18P	B. . SCREW (80205)	2	
-65C	MS21042L3	. . NUT (96906)	2	
-66	850962-125	. TUBE ASSY, system No. 2 hydraulic pressure *(see fig. 122 for reqd)*	REF	
-67	777486-1	. TUBE ASSY, system No. 1 hydraulic pressure *(see fig. 29 for reqd)*	REF	
-68	777486-3	. TUBE ASSY, system No. 1 hydraulic return *(see fig. 29 for reqd)*	REF	
-69	777486-5	. TUBE ASSY, system No. 2 hydraulic return *(see fig. 29 for reqd)*	REF	
-70	777486-7	. TUBE ASSY, system No. 2 hydraulic pressure *(see fig. 29 for reqd)*	REF	
-71	3305-6	G. COUPLING HALF, quick disconnect, female (00624) (Lockheed spec dwg 668430-3) *(see fig. 245 for reqd)*	REF	
-73	330202-12	. COUPLING HALF, quick disconnect, male (00624) (Lockheed spec dwg 668429-7) *(see fig. 245 for reqd)*	REF	
-75	R9800-6-0145	. HOSE ASSY, hydraulic (No. 2 pump case fill and drain) (50599) *(see fig. 245 for reqd)*	REF	6701-6790; 6831-
	MS8001G306A	F. HOSE ASSY, hydraulic (No. 2 pump case fill and drain) (96906) *(see fig. 245 for reqd)*	REF	6791-6830
-76	R9800-6-0222	. HOSE ASSY, hydraulic (No. 1 pump case fill and drain) (50599) *(see fig. 245 for reqd)*	REF	6701-6790; 6831-
	MS8001G232A	F. HOSE ASSY, hydraulic (No. 1 pump case fill and drain) (96906) *(see fig. 245 for reqd)*	REF	6791-6830
-77	776435-49	. TUBE ASSY, dive flap down *(see fig. 126 for reqd)*	REF	6701-6790; 6831-
	849539-101	. HARNESS ASSY, hydraulic generator shutoff valve *(see fig. 194 for reqd)*	REF	6701-6765
	852067-101	. HARNESS ASSY, hydraulic generator shutoff valve *(see fig. 194 for reqd)*	REF	6766-6790
	852299-101	. HARNESS ASSY, P-312 to oil press XMTR and hqd gen s/o valve *(see fig. 192 for reqd)*	REF	6791-6830
-78	CA3106K10SL4S	. . CONNECTOR (P112), plug (solenoid operated hydraulic shutoff valve) (71468)	1	
-79	MS3057-4A	. . ADAPTER (96906)	1	

A - Removed per AA.1F-104S-OT-101
B - Reqd per AA.1F-104S-OT-101
C - Removed per AA.1F-104-OT-627A
D - Reqd per AA.1F-104-OT-672A
E - Reqd per AA.1F-104S-OT-118
F - Only per partial incorporation of SPU system
G - All parts marked with letter G serve also to install partial incorporation of SPU system

Figura e particolare	NDR	1 2 3 4 5 6 7	DENOMINAZIONE	Quant.	Codice applicab.
124A			ENGINE COMPARTMENT PIPING AND EQUIPMENT FUSELAGE STATION 489 to 600 RIGHT HAND		
	FL0924-101	A.	PLUMBING INSTL, RH engine compartment	1	6791-6830
- 1	852717-175	A.	. TUBE ASSY, hydraulic reservoir relief	1	6791-6830
- 2	P30-220	. .	VALVE, hydraulic relief (91816) (Lockheed spec dwg 668413-1) *(see fig. 123 for reqd)*	REF	6791-6830
- 3	NAS1596-6	A.	. PACKING (80205)	1	6791-6830
- 4	AS1003D201608	A.	. TEE (79470)	2	6791-6830
- 5	AN960D2616	A.	. WASHER (88044)	2	6791-6830
- 6	AN924-20D	A.	. NUT (88044)	2	6791-6830
- 7	MS21902D8	A.	. UNION (96906)	1	6791-6830
	852740-101	A.	. BRACKET INSTL, plumbing support	1	6791-6830
- 8	852741-101	A.	. . BRACKET, plumbing support	1	6791-6830
- 9	852717-177	A.	. TUBE ASSY, system No. 2 hydraulic pump suction	1	6791-6830
-10	852716-127	A.	. TUBE ASSY, system No. 1 hydraulic return	1	6791-6830
-11	8LV486-10	. .	VALVE, hydraulic low pressure relief (A2898) (26044) (Lockheed spec dwg 668451-1) *(see fig. 123 for reqd)*	REF	6791-6830
-12	NAS1596-8	A.	. PACKING (80205)	1	6791-6830
-13	AS1001D080608	A.	. TEE (79470)	1	6791-6830
-14	852768-101	A.	. PLATE, plumbing mounting	1	6791-6830
-15	AN960D1216	A.	. WASHER (88044)	1	6791-6830
-16	AN924-8D	A.	. NUT (88044)	1	6791-6830
-17	852717-163	A.	. TUBE ASSY, system No. 1 hydraulic return	1	6791-6830
-18	852716-125	A.	. TUBE ASSY, system No. 1 hydraulic return	1	6791-6830
-19	852717-173	A.	. TUBE ASSY, hydraulic reservoir relief	1	6791-6830
-20	765337-139	A.	. TUBE ASSY, system No. 2 hydraulic fluid level indicating system	1	6791-6830
-21	852717-127	A.	. TUBE ASSY, system No. 2 hydraulic return	1	6791-6830
-22	852717-129	A.	. TUBE ASSY, system No. 2 hydraulic return	1	6791-6830
-23	852717-101	A.	. TUBE ASSY, system No. 2 reservoir pressure	1	6791-6830
-24	852716-115	A.	. TUBE ASSY, system No. 2 hydraulic return	1	6791-6830
-25	852716-117	A.	. TUBE ASSY, system No. 1 hydraulic return	1	6791-6830
-26	852716-119	A.	. TUBE ASSY, system No. 2 hydraulic return	1	6791-6830
-27	AS1005D080804	A.	. TEE (79470)	1	6791-6830
-28	852716-109	A.	. TUBE ASSY, system No. 2 hydraulic pressure	1	6791-6830
-29	852716-169	A.	. TUBE ASSY, emergency pump pressure	1	6791-6830
-30	MS21907D6	A.	. ELBOW (96906)	1	6791-6830
-31	AN960D916	A.	. WASHER (88044)	1	6791-6830
-32	AN924-6D	A.	. NUT (88044)	1	6791-6830
-33	852716-171	A.	. TUBE ASSY, emergency pump pressure	1	6791-6830
-34	852717-131	A.	. TUBE ASSY, system No. 2 hydraulic return	1	6791-6830
-35	R4722C0336L	A.	. HOSE ASSY (50599)	1	6791-6830
-36	R4722C0326L	A.	. HOSE ASSY (50599)	1	6791-6830
-37	370503-20	. .	COUPLING HALF, female quick disconnect (00624) (Lockheed spec dwg 668430-11) *(see fig. 123 for reqd)*	REF	6791-6830
-38	852717-125	A.	. TUBE ASSY, system No. 2 hydraulic return	1	6791-6830
-39	852717-105	A.	. TUBE ASSY, system No. 2 hydraulic pressure	1	6791-6830
-40	852717-133	A.	. TUBE ASSY, system No. 2 hydraulic return	1	6791-6830
-41	852717-159	A.	. TUBE ASSY, system No. 1 hydraulic pressure	1	6791-6830
-42	852717-115	A.	. TUBE ASSY, system No. 2 hydraulic pressure	1	6791-6830
-43	4CV4612	. .	VALVE, hydraulic check (A2898) (26044) (Lockheed spec dwg 668053-3) (see T.O. 9H8-6-74-4) *(see fig. 124 for reqd)*	REF	6791-6830
-44	AS1002D060604	A.	. TEE (79470)	1	6791-6830
-45	NAS1596-6	A.	. PACKING (80205)	1	6791-6830
-46	MS21914-4D	A.	. CAP (96906)	1	6791-6830
-47	852717-139	A.	. TUBE ASSY, system No. 2 hydraulic return	1	6791-6830
-48	852717-109	A.	. TUBE ASSY, system No. 2 hydraulic pressure	1	6791-6830
-49	MS21905D6	. .	TEE (96906) *(see fig. 123 for reqd)*	REF	6791-6830
-50	852717-135	A.	. TUBE ASSY, system No. 2 hydraulic return	1	6791-6830
-51	852717-107	A.	. TUBE ASSY, system No. 2 hydraulic pressure	1	6791-6830
-52	852717-167	A.	. TUBE ASSY, system No. 1 hydraulic return	1	6791-6830

Fuselage Hydraulics

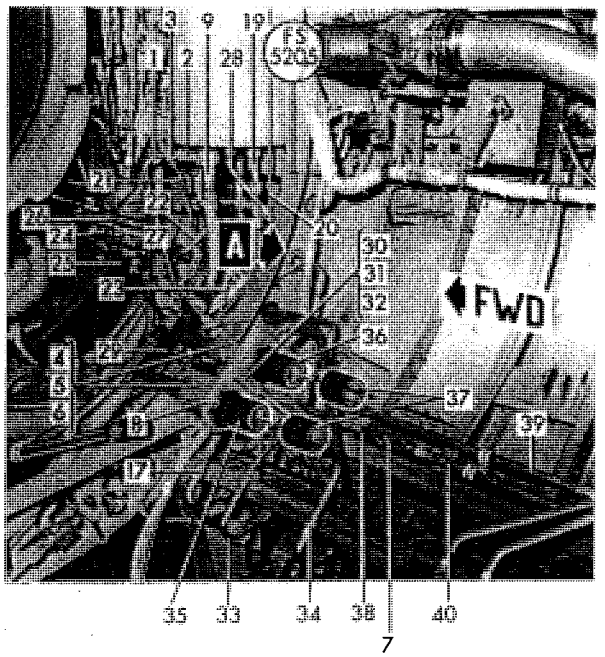

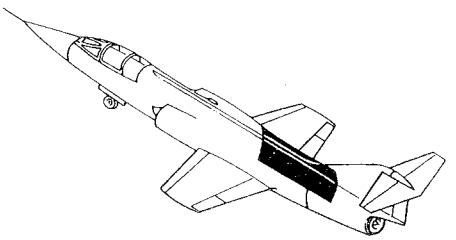

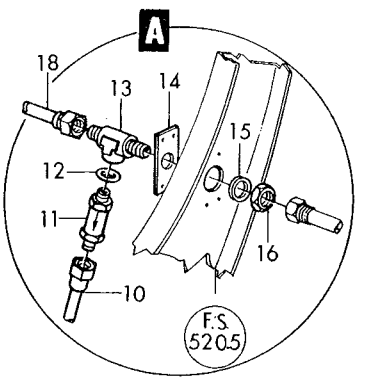

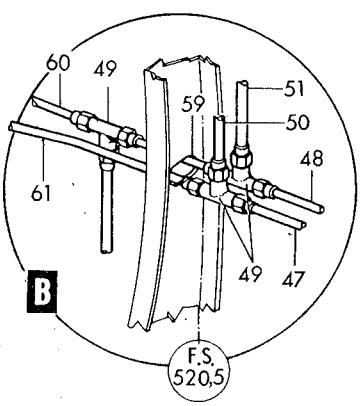

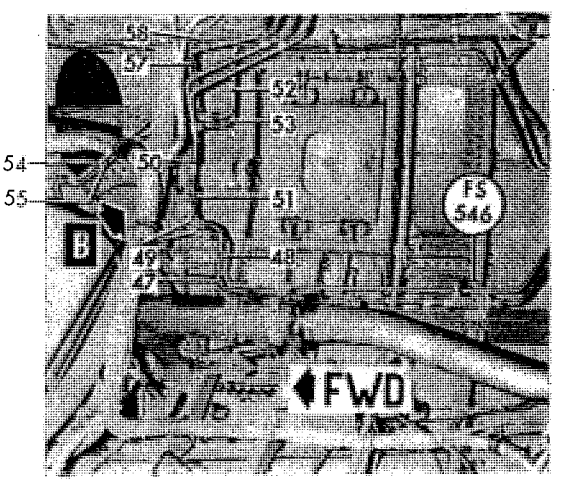

Figure 124A-Engine Compartment Piping and Equipment Fuselage Station 489 to 600 right hand (Sheet 1 of 2)

Fuselage Hydraulics

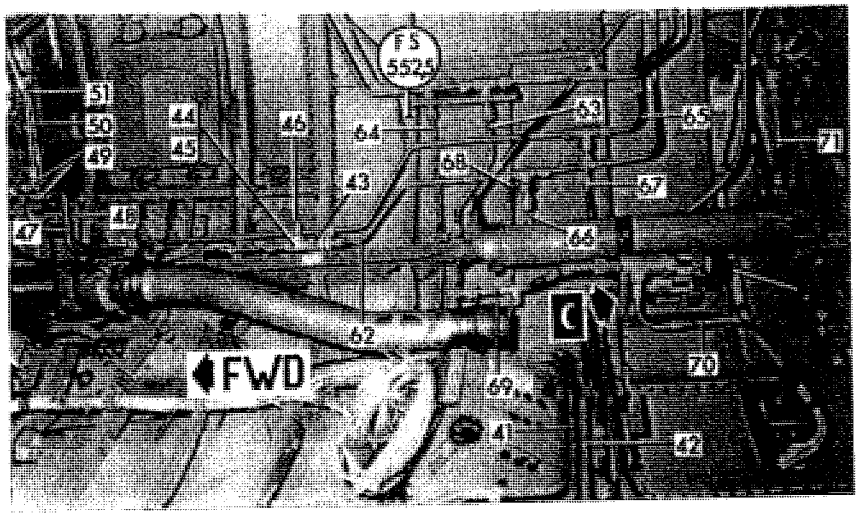

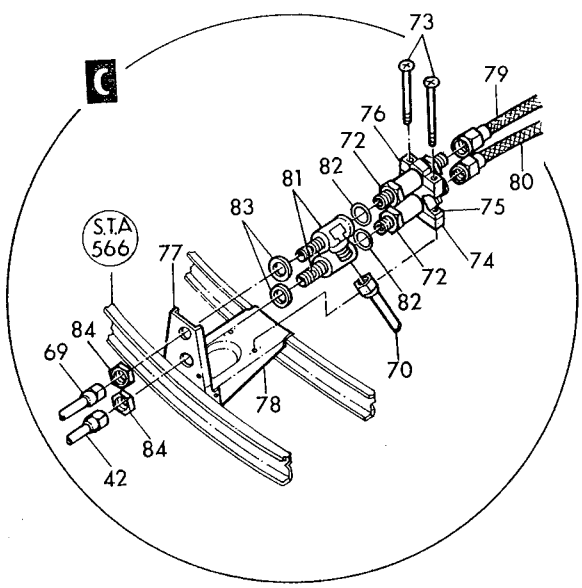

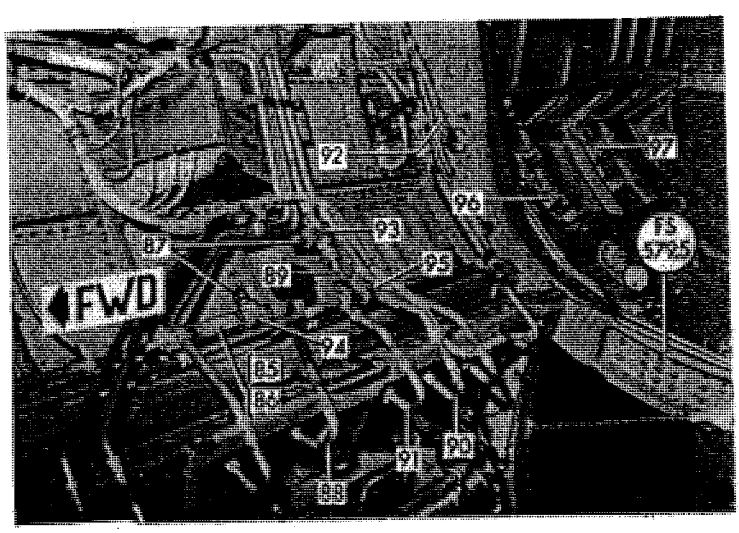

Figure 124A-Engine Compartment Piping and Equipment Fuselage Station 489 to 600 right hand (Sheet 2 of 2)

Figura e particolare	NDR	1	2	3	4	5	6	7	DENOMINAZIONE	Quant.	Codice applicab.
124A-53	852717-149	A.	.						TUBE ASSY, system No. 1 hydraulic pressure	1	6791-6830
-54	852716-129	A.	.						TUBE ASSY, system No. 1 hydraulic return	1	6791-6830
-55	852716-123	A.	.						TUBE ASSY, system No. 1 hydraulic pressure	1	6791-6830
-57	852717-165	A.	.						TUBE ASSY, system No. 1 hydraulic return	1	6791-6830
-58	852717-161	A.	.						TUBE ASSY, system No. 1 hydraulic pressure	1	6791-6830
-59	852716-111	A.	.						TUBE ASSY, system No. 2 hydraulic pressure	1	6791-6830
-60	852716-113	A.	.						TUBE ASSY, system No. 2 hydraulic pressure	1	6791-6830
-61	852716-121	A.	.						TUBE ASSY, system No. 2 hydraulic return	1	6791-6830
-62	852717-141	A.	.						TUBE ASSY, system No. 2 hydraulic return	1	6791-6830
-63	852717-151	A.	.						TUBE ASSY, system No. 1 hydraulic pressure	1	6791-6830
-64	852717-169	A.	.						TUBE ASSY, system No. 1 hydraulic return	1	6791-6830
-65	852717-111	A.	.						TUBE ASSY, system No. 2 hydraulic pressure	1	6791-6830
-66	852717-143	A.	.						TUBE ASSY, system No. 2 hydraulic return	1	6791-6830
-67	852717-113	A.	.						TUBE ASSY, system No. 2 hydraulic pressure	1	6791-6830
	852747-101	A.	.						BRACKET INSTL, plumbing	1	6791-6830
-68	852748-101	A.	.	.					BRACKET, plumbing	1	6791-6830
-69	852717-155	A.	.						TUBE ASSY, system No. 1 hydraulic pressure	1	6791-6830
-70	852717-157	A.	.						TUBE ASSY, system No. 1 hydraulic pressure	1	6791-6830
-71	852717-183	A.	.						TUBE ASSY, dive flap down	1	6791-6830
-72	4CV4125-1	.	.						VALVE, pump check (A2898) (26044) (Lockheed spec dwg 668436-1) (see T.O. 9H8-6-74-4) *(see fig. 124 for reqd)*	REF	6791-6830
	852749-101	A.	.						SUPPORT INSTL, plumbing	1	6791-6830
									Attaching Parts		
-73	NAS623-4-56	A.	.						SCREW (80205)	2	6791-6830
									———— * ————		
	852750-101	A.	.	.					BLOCK ASSY, plumbing	1	6791-6830
-74	852750-103	A.	.	.	.				BLOCK (match comp do not stk sep)	1	6791-6830
-75	852750-105	A.	.	.	.				BLOCK (match comp do not stk sep)	1	6791-6830
-76	852750-107	A.	.	.	.				BLOCK (match comp do not stk sep)	1	6791-6830
-77	852751-101	A.	.	.					BRACKET, plumbing	1	6791-6830
-78	852752-101	A.	.	.					BRACKET, plumbing	1	6791-6830
-79	R4723B0324H	A.	.						HOSE ASSY (50599)	1	6791-6830
-80	R4723B0274H	A.	.						HOSE ASSY (50599)	1	6791-6830
-81	AS1002-081206	A.	.						TEE (79470)	2	6791-6830
-82	NAS1596-12	A.	.						PACKING (80205)	2	6791-6830
-83	AN960D1216	A.	.						WASHER (88044)	2	6791-6830
-84	AN924-8D	A.	.						NUT (88044)	2	6791-6830
-85	4CV483	.	.						VALVE, hydraulic check (A2898) (26044) (Lockheed spec dwg 668054-3) (see T.O. 9H8-6-74-4) *(see fig. 124 for reqd)*	REF	6791-6830
-86	NAS1596-8	A.	.						PACKING (80205)	1	6791-6830
-87	MS21914-6D	A.	.						CAP (96906)	2	6791-6830
-88	852717-185	A.	.						TUBE ASSY, system No. 2 hydraulic return	1	6791-6830
-89	852717-145	A.	.						TUBE ASSY, system No. 2 hydraulic return	1	6791-6830
-90	852717-147	A.	.						TUBE ASSY, system No. 2 hydraulic return	1	6791-6830
-91	852717-121	A.	.						TUBE ASSY, system No. 2 hydraulic pressure	1	6791-6830
-92	852717-123	A.	.						TUBE ASSY, system No. 2 hydraulic pressure	1	6791-6830
-93	MS21910D8	A.	.						TEE (96906)	1	6791-6830
-94	AS102D080806	A.	.						TEE (79470)	1	6791-6830
-95	MS21905D8	A.	.						TEE (96906)	1	6791-6830
	852240-103	A.	.						ACCUMULATOR INSTL, starter system	1	6791-6830
-96	852241-101	A.	.	.					BRACKET, accumulator fwd support	1	6791-6830
-97	852723-101	A.	.	.					BRACKET, accumulator support	1	6791-6830

A - Only partial incorporation of SPU system

Figura e particolare	NDR	DENOMINAZIONE (1 2 3 4 5 6 7)	Quant.	Codice applicab.
		ENGINE AIR BY-PASS FLAPS PIPING		
125	785323-101	A. FLAP INSTL, air by-pass *(see fig. 114 for reqd)*	REF	6701-6740
	851056-101	B. FLAP INSTL, air by-pass *(see fig. 114 for reqd)*	REF	
	785323-107	A. . FLAP ASSY, air by-pass *(see fig. 254)*	1	6701-6740
	851056-103	B. . FLAP ASSY, air by-pass *(see fig. 254)*	1	
- 1	WA201-3	. . . ACTUATOR, engine air by-pass valve (77751) (Lockheed spec dwg 668144-3) (see T.O. 9P5-15-2-3)	2	
- 2	WA201-15	B. . . ACTUATOR, engine air by-pass valve (77751) (Lockheed spec dwg 668144-101) (see Sep. Publ. whn avail.)	2	
		Attaching Parts		
- 3	MS20004-10	. . . BOLT (96906)	2	
- 4	MS20002C4	. . . WASHER (96906)	2	
- 5	MS20004-10	B. . . BOLT (96906)	2	
- 6	MS20002C4	B. . . WASHER (96906)	2	
- 7	763306-5	B. . . TUBE ASSY, by-pass flap open - RH	1	
- 8	763306-6	B. . . TUBE ASSY, by-pass flap open - LH	1	
- 9	763306-15	B. . . TUBE ASSY, by-pass flap closed - LH	1	
-10	763306-16	B. . . TUBE ASSY, by-pass flap closed - RH	1	
-11	761245	B. . . VALVE, hydraulic bleeder	3	
-12	NAS603-6	B. . . SCREW (80205)	3	
-13	MS35337-43	C. . . WASHER (88044)	3	
-14	726498-3	B. . . TEE, air by-pass bleeder	3	
-15	MS21905-4	B. . . TEE (96906) (In RH by-pass flap close line)	1	
-16	MS21916-4-3	B. . . REDUCER (96906)	4	
-17	NAS1596-3	B. . . PACKING (80205)	4	
	798415-101	A. PLUMBING INSTL, secondary air by-pass flap *(see fig. 114 for reqd)*	REF	6701-6740
	851198-101	B. PLUMBING INSTL, secondary air by-pass flap *(see fig. 114 for reqd)*	REF	
-18	798411-167	. . TUBE ASSY, by-pass flap open	1	
-19	798411-165	. . TUBE ASSY, by-pass flap closed	1	
-19A	798411-183	B. . TUBE ASSY, by-pass flap open	1	
-19B	798411-185	B. . TUBE ASSY, by-pass flap closed	1	
-19C	798411-191	B. . TUBE ASSY, by-pass flap open	1	
-19D	726497-3	B. . CLAMPBLOCK ASSY, tube support	6	
-20	769828-1	. . CLAMPBLOCK ASSY, No. 3 tube support (match comp do not stk sep)	3	
		Attaching Parts		
-21	AN520-10R26	A. . SCREW (88044)	2	6701-6740
	NAS603-36	B. . SCREW (80205)	2	
-22	AN520-10R16	A. . SCREW (88044)	1	6701-6740
	NAS603-18	B. . SCREW (80205)	1	
-23	NAS43DD3-48	. . SPACER (80205)	2	
-24	AN6289D4	. . NUT (88044)	4	
-25	728072-1	. . FITTING, hydraulic bleeder	2	
-26	728669-101	. . BUSHING, expander	4	
-27	LS4634-3	. . GASKET, boss straight thread tube fitting (36659) (whn exh use NAS1596-3)	4	
	NAS1596-3	. . PACKING (80205) (use LS4634-3 until exh)	REF	
-28	LS4634-4	. . GASKET, boss straight thread tube fitting (36659) (whn exh use NAS1596-4)	4	
	NAS1596-4	. . PACKING (80205) (use LS4634-4 until exh)	REF	
-29	LS4764-4	. . RING, teflon hydraulic backup (36659)	4	
-30	MS21912D4	. . TEE (96906)	2	
-30A	MS21905D4	B. . TEE (96906)	1	
-31	AN520-10R6	A. . SCREW (88044)	2	6701-6740
	NAS603-6	B. . SCREW (80205)	2	
-32	AN935-10L	A. . WASHER (88044)	2	6701-6740
	MS35337-43	B. . WASHER (96906)	2	
-33	761245	. . VALVE, hydraulic bleeder	2	
	798415-103	A. PLUMBING INSTL, secondary air by-pass flap *(see fig. 31 for reqd)*	REF	6701-6740
	851198-103	B. PLUMBING INSTL, secondary air by-pass flap *(see fig. 31 for reqd)*	REF	
-34	798411-163	. . TUBE ASSY, by-pass flap open	1	
-35	798411-159	. . TUBE ASSY, by-pass flap closed	1	
-36	798411-157	A. . TUBE ASSY, system No. 2 hydraulic return *(see fig. 123)*	1	6701-6740
-37	798411-173	B. . TUBE ASSY, system No. 2 hydraulic return	1	
-38	798411-161	A. . TUBE ASSY, system No. 2 hydraulic pressure *(see fig. 123)*	1	6701-6740

Fuselage Hydraulics

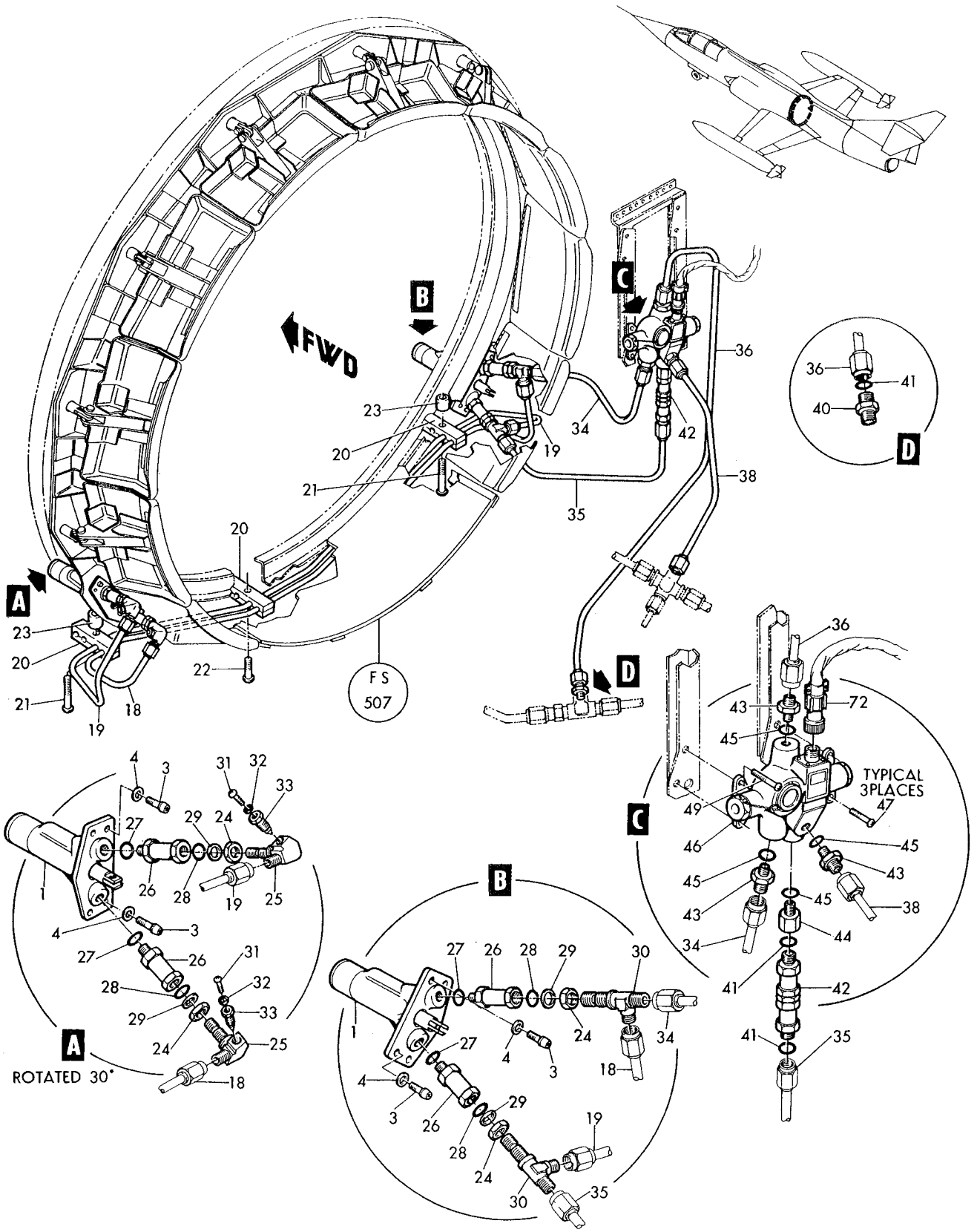

Figure 125–Engine Air By-Pass Flaps Piping-See text for usage - (Sheet 1 of 3)

Fuselage Hydraulics

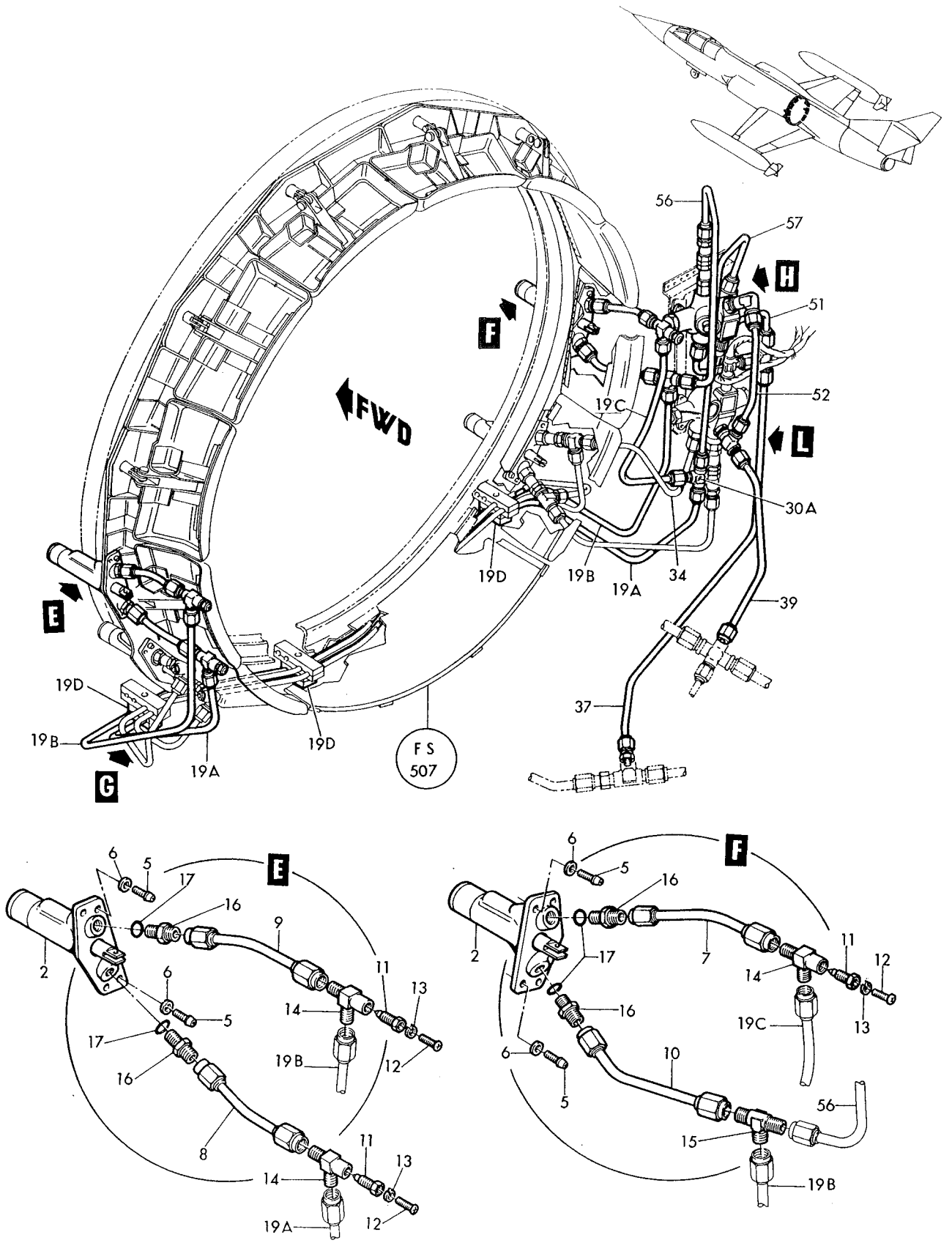

Figure 125–Engine Air By-Pass Flaps Piping - See text for usage- (Sheet 2 of 3)

Fuselage Hydraulics

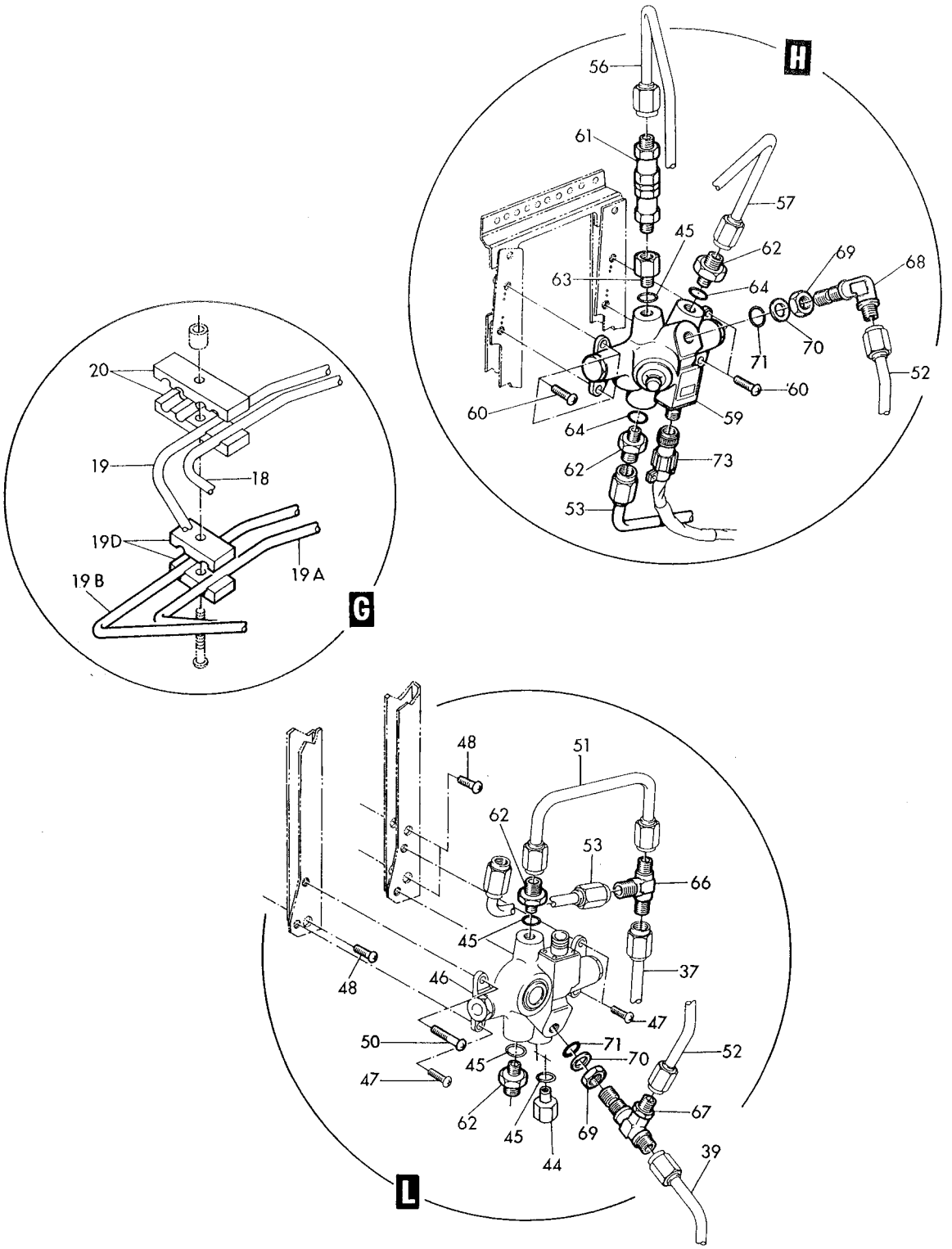

Figure 125-Engine Air By-Pass Flaps Piping-See text for usage-(Sheet 3 of 3)

Figura e particolare	NDR	1 2 3 4 5 6 7 DENOMINAZIONE	Quant.	Codice applicab.
125-39	798411-177	B. . TUBE ASSY, system No. 2 hydraulic pressure	1	
-40	MS21902D4	. . UNION (96906)	1	
-41	LS4634-4	. . GASKET, boss straight thread tube fitting (36659) (whn exh use NAS1596-4)	3	
	NAS1596-4	. . PACKING (80205) (use LS4634-4 until exh)	REF	
-42	2R1442-3-30	. . VALVE, hydraulic restrictor (A2898) (26044) (Lockheed spec dwg 668066)	1	
	2RH441	. . . HOUSING, hydraulic restrictor valve (26044)	2	
	16-104	. . . FITTING, hydraulic restrictor valve (26044)	1	
	37092	. . . FILTER, hydraulic restrictor valve (81321)	2	
	LS4634-5	. . . GASKET, boss straight thread tube fitting (36659) (whn exh use NAS1596-5)	2	
	NAS1596-5	. . . PACKING (80205) (use LS4634-5 until exh)	REF	
	NP7	. . . NAMEPLATE, hydraulic restrictor valve (91207)	1	
-43	MS21916D6-4	A. . REDUCER (96906)	3	6701-6740
-44	AN893-2D	. . BUSHING (88044)	1	
-45	LS4634-6	. . GASKET, boss straight thread tube fitting (36659) (whn exh use NAS1596-6)	4	
	NAS1596-6	. . PACKING (80205) (use LS4634-6 until exh)	REF	
-46	14120-4	. . VALVE (L15), hydraulic solenoid (A0359) (79294) (Lockheed spec dwg 668153-9) (see T.O. 9H8-14-45-33)	1	
		Attaching Parts		
-47	NAS221-9	A. . SCREW (80205)	3	6701-6740
-48	NAS623-3-6	B. . SCREW (80205)	3	
-49	NAS221-17	A. . SCREW (80205)	1	6701-6740
-50	NAS623-3-11	B. . SCREW (80205)	1	
	NAS43-3-30	A. . SPACER (80205)	1	6701-6740
	NAS43HT3-30	B. . SPACER (80205)	1	
		———— * ————		
-51	798411-175	B. . TUBE ASSY, system No. 2 hydraulic return	1	
-52	798411-179	B. . TUBE ASSY, system No. 2 hydraulic pressure	1	
-53	798411-181	B. . TUBE ASSY, system No. 2 hydraulic return	1	
-56	798411-187	B. . TUBE ASSY, by-pass flap closed	1	
-57	798411-189	B. . TUBE ASSY, by-pass flap open	1	
-59	14120-5	B. . VALVE (L15), hydraulic solenoid (A0359) (79294) (Lockheed spec dwg 668153-101) (see Sep. Publ. whn avail.)	1	
		Attaching Parts		
-60	NAS623-3-5	B. . SCREW (80205)	4	
		———— * ————		
-61	2R1442-3-30	B. . VALVE, hydraulic restrictor (A2898) (26044) (Lockheed spec dwg 668066)	1	
	2RH441	B. . . HOUSING, hydraulic restrictor valve (26044)	2	
	16-104	B. . . FITTING, hydraulic restrictor valve (26044)	1	
	37092	B. . . FILTER, hydraulic restrictor valve (81321)	2	
	LS4634-5	B. . . GASKET, boss straight thread tube fitting (36659) (whn exh use NAS1596-5)	2	
	NAS1596-5	B. . . PACKING (80205) (use LS4634-5 until exh)	REF	
	NP7	B. . . NAMEPLATE, hydraulic restrictor valve (91207)	1	
-62	MS21916D6-4	B. . REDUCER (96906)	4	
-63	AN893-2D	B. . BUSHING (88044)	1	
-64	LS4634-6	B. . GASKET, boss straight thread tube fitting (36659) (whn exh use NAS1596-6)	2	
	NAS1596-6	B. . PACKING (80205) (use LS4634-6 until exh)	REF	
-66	MS21905D4	B. . TEE (96906)	1	
-67	AS1003D060404	B. . TEE (79470)	1	
-68	AS1008D0604	B. . ELBOW (79470)	1	
-69	AN6289D6	B. . NUT (88044)	2	
-70	LS4764-6	B. . RING, teflon hydraulic backup (36659)	2	
-71	LS4634-6	B. . GASKET, boss straight thread tube fitting (36659) (whn exh use NAS1596-6)	2	
	NAS1596-6	B. . PACKING (80205) (use LS4634-6 Until exh)	REF	
	849537-101	. HARNESS ASSY, fus sta 490 firewall connector *(see fig. 194 for reqd)*	REF	6701-6740
	849867-101	. HARNESS ASSY, fus sta 490 firewall connector *(see fig. 194 for reqd)*	REF	6741-
-72	CA3106K10SL4S	. . CONNECTOR (P112), plug (No. 1 lower air bypass cont valve) (71468)	1	
	MS3057-4A	. . CLAMP (96906)	1	
-73	CA3106KE10SL3S	B. . CONNECTOR (P445), plug (No. 2 lower air bypass cont valve) (71468)	1	

A - Removed per AA.1F-104S-OT-138
B - Reqd per AA.1F-104S-OT-138
C - Reqd per AA.1F-104S-OT-138 and AA.1F-104S-OT-162

Figura e particolare	NDR	1 2 3 4 5 6 7 DENOMINAZIONE	Quant.	Codice applicab.
		SPEED BRAKES ACTUATING PIPING AND EQUIPMENT		
126	851077-103	. PLUMBING INSTL, RH engine compartment *(see fig. 114 for reqd)* . . .	REF	
- 1	776435-49	. . TUBE ASSY, dive flap down *(see fig. 124 and 131)*	1	6701-6790; 6831-
- 2	776435-57	. . TUBE ASSY, dive flap up *(see fig. 131)*	1	
- 3	MS21902D8	. . UNION (96906)	2	6701-6790; 6831-
- 4	MS21902D6	. . UNION (96906)	1	
- 5	776026-49	. . TUBE ASSY, dive flap up	1	
- 6	776026-25	. . TUBE ASSY, dive flap up	1	
- 7	776026-21	. . TUBE ASSY, dive flap down	1	
- 8	785382-37	. . TUBE ASSY, dive flap down	1	
	851077-101	. PLUMBING INSTL, RH engine compartment *(see fig. 114 for reqd)* . . .	REF	
- 9	MS21902D6	. . UNION (96906)	2	
-10	LS4634-6	. . GASKET, boss straight thread tube fitting (36659) (whn exh use NAS1596-6)	2	
	NAS1596-6	. . PACKING (80205) (use LS4634-6 until exh)	REF	
-11	3055741-1	. . VALVE, hydraulic speed brake flow equalizer (A1384) (77068) (Lockheed spec dwg 668437-3) (see T.O. 9H8-7-7-3)	1	
		Attaching Parts		
	NAS623-3-10	. SCREW (80205)	4	
	AN960D10	. WASHER (88044)	4	
	MS21042L3	. . NUT (96906)	4	
		*		
-12	LS4634-8	. . GASKET, boss straight thread tube fitting (36659) (whn exh use NAS1596-8)	1	
	NAS1596-8	. . PACKING (80205) (use LS4634-8 until exh)	REF	
-13	MS21902D8	. . UNION (96906)	1	
-14	776026-19	. . TUBE ASSY, dive flap down *(see fig. 124)*	1	6701-6790; 6831-
	TA102-2-6-7	A. . BRACKET (84971)	1	
	TA4C74S8T	A. . CLAMP (84971)	1	
		Attaching Parts		
	AN520-10R8	A. . SCREW (88044)	1	
	MS21042L3	A. . NUT (96906)	1	
		*		
-15	AS1003D080608	. . TEE, bulkhead reducing (79470)	1	
-16	MS21916D8-6	. . REDUCER (96906)	1	
-17	AN6289D8	. . NUT (88044)	1	
-18	LS4764-8	. . RING, teflon hydraulic backup (36659)	1	
-19	LS4634-8	. . GASKET, boss straight thread tube fitting (36659) (whn exh use NAS1596-8)	2	
	NAS1596-8	. . PACKING (80205) (use LS4634-8 until exh)	REF	
-20	785218-43	. . TUBE ASSY, dive flap up	1	
	850949-103	. PLUMBING INSTL, LH engine compartment *(see fig. 114 for reqd)* . . .	REF	
-21	MS21902D6	. . UNION (96906)	2	
-22	MS21916D8-6	. . REDUCER (96906)	1	
-23	775973-23	. . TUBE ASSY, dive flap up	1	
-24	785382-35	. . TUBE ASSY, dive flap down	1	
-25	AS1008D0806	. . ELBOW, bulkhead reducing (79470)	1	
-26	AN6289D8	. . NUT (88044)	1	
-27	LS4764-8	. . RING, teflon hydraulic backup (36659)	1	
-28	LS4634-8	. . GASKET, boss straight thread tube fitting (36659) (whn exh use NAS1596-8)	2	
	NAS1596-8	. . PACKING (80205) (use LS4634-8 until exh)	REF	
-29	1171L000-505	. CYLINDER, aircraft dive flap system actuating (A0359) (75662) (Lockheed spec dwg 668088-101) (see T.O. 9H2-4-132-3) *(see fig. 58 for reqd)*	REF	6701-6866
	1171L000-507	. CYLINDER, aircraft dive flap system actuating (A0359) (75662) (Lockhhed spec dwg 668088-103) (see T.O. whn avail.) *(see fig. 58 for reqd)*	REF	6867-

A - Reqd per AA.1F-104S-OT-106

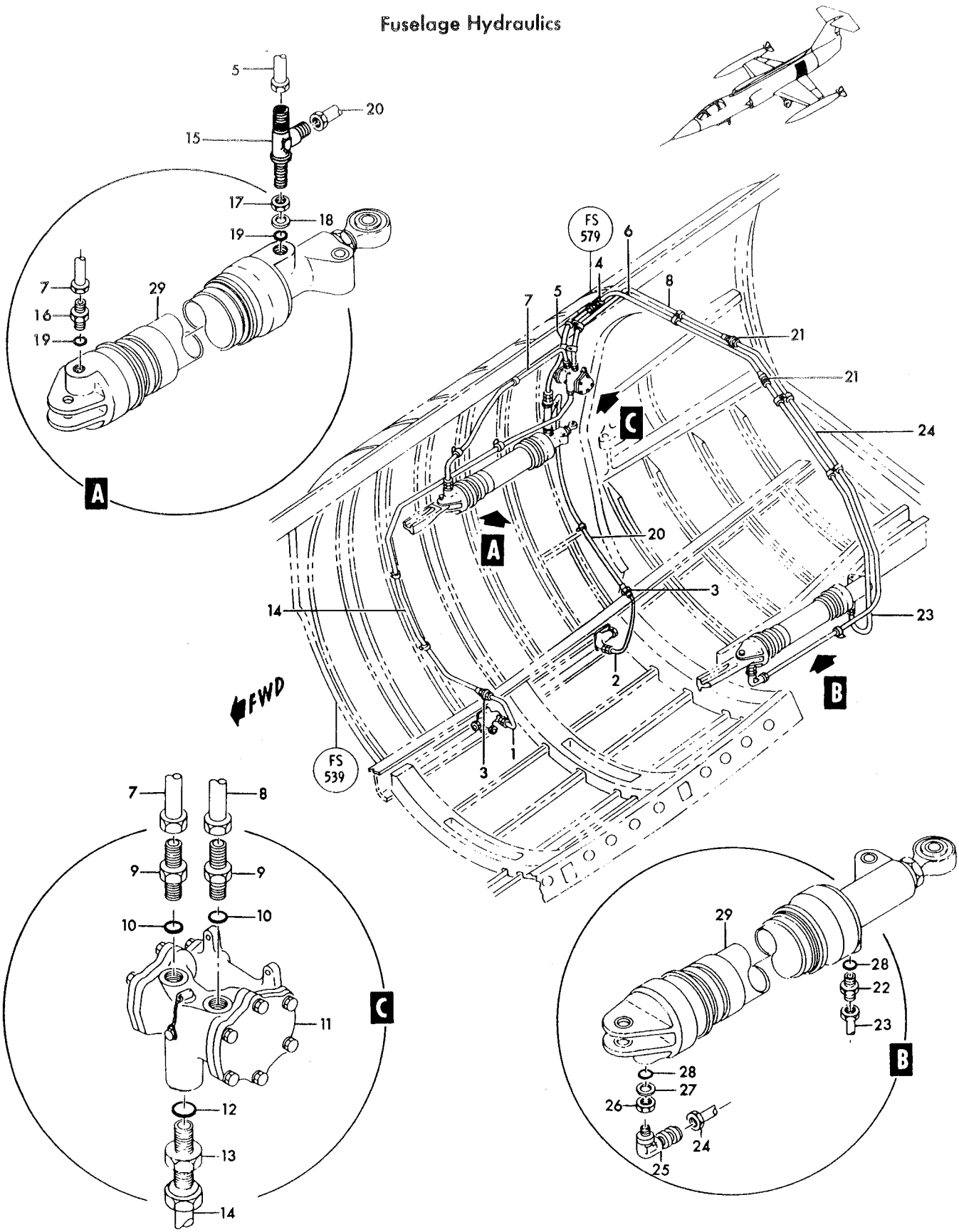

Figure 126 — Speed Brakes Actuating Piping and Equipment

Figura e particolare	NDR	1	2	3	4	5	6	7	DENOMINAZIONE	Quant.	Codice applicab.
									RAM AIR TURBINE AND EMERGENCY HYDRAULIC PIPING		
127	784007-1			.					TURBINE INSTL, ram air *(see fig. 114 for reqd)*	REF	
-1	6506700	C.		.					AUXILIARY SET, (G1) ram air turbine (A1620) (05151) (Lockheed spec dwg 668442-5) (see T.O. 9H7-3-11-4) *(see fig. 50 for reqd)*	REF	
-3	MS21911D6			.	.				TEE (96906)	1	
-4	AN6289D6			.	.				NUT (88044)	1	
-5	AN6290-6			.	.				GASKET (88044)	1	
-6	LS4764-6			.	.				RING, teflon hydraulic backup (36659)	1	
-7	763392-23			.	.				TUBE ASSY, emergency pump pressure	1	
-9	ER784D100610			.	.				TEE (79470)	1	
-10	AN6289D10			.	.				NUT (88044)	1	
-11	LS4764-10			.	.				RING, teflon hydraulic backup (36659)	1	
-12	AN6290-10			.	.				GASKET (88044)	1	
-13	761246			.	.				PLUG, bleeder	2	
-14	761245			.	.				VALVE, hydraulic bleeder	2	
-15	LS4634-6			.	.				GASKET, boss straight thread tube fitting (36659) (whn exh use NAS1596-6)	2	
	NAS1596-6			.	.				PACKING (80205) (use LS4634-6 until exh)	REF	
-16	763392-25			.	.				TUBE ASSY, emergency pump suction	1	
-17	727676-1			.	.				SWIVEL ASSY, ram air turbine	1	
									Attaching Parts		
-18	NAS623-3-4			.	.				SCREW (80205)	2	
-19	AN960D10			.	.				WASHER (under head of screw) (88044)	2	
-20	MS21042L3			.	.				NUT (96906)	2	
									*		
-21	726033-3			.	.	.			PLUG, ram air turbine swivel	1	
-22	LS4565-11			.	.	.			RING, teflon backup packing (36659)	2	
-23	AN6290-3			.	.	.			GASKET (88044)	1	
-24	AN6227B11			.	.	.			PACKING (88044)	2	
-25	727675-1			.	.	.			FITTING, ram air turbine swivel	1	
-26	726034-3			.	.	.			PLUG, ram air turbine swivel	1	
-27	AN6290-6			.	.	.			GASKET (88044)	1	
-28	AN6227B14			.	.	.			PACKING (88044)	2	
-29	726037-3			.	.	.			FITTING, ram air turbine swivel	1	
-30	727674-1			.	.	.			BODY, ram air turbine swivel	1	
	784006-1			.					PLUMBING INSTL, fus sta 305 to 335 ram air turbine *(see fig. 114 for reqd)*	REF	
-31	MS21908D6			.	.				ELBOW (96906)	1	
-32	LS4764-6			.	.				RING, teflon hydraulic backing (36659)	1	
-33	AN6290-6			.	.				GASKET (88044)	1	
-34	AN6289D6			.	.				NUT (88044)	1	
-35	763392-7			.	.				TUBE ASSY, emergency pump pressure	1	
-36	AN6290-10			.	.				GASKET (88044)	1	
-37	MS21902D10			.	.				UNION (96906)	1	
-38	763392-8			.	.				TUBE ASSY, emergency pump suction	1	
	851206-101			.					PLUMBING INSTL, fus sta 335 to 422 fwd mid fus *(see fig. 114 for reqd)*	REF	
-39	MS21904D6			.	.				ELBOW (96906)	1	
-40	784927-9			.	.				TUBE ASSY, emergency pump pressure	1	
-41	MS21904D10			.	.				ELBOW (96906)	1	
-42	784927-11			.	.				TUBE ASSY, emergency pump suction	1	
	851112-103			.					PLUMBING INSTL, LH main wheel well *(see fig. 114 for reqd)*	REF	
-43	MS21924-6			.	.				UNION (96906)	1	
-44	LS1588-3			.	.				WASHER, bulckhead fitting (36659)	1	
-45	AN924-6			.	.				NUT (88044)	1	
-46	MS21924-10			.	.				UNION (96906)	1	
-47	AN924-10			.	.				NUT (88044)	1	
-48	LS1588-8			.	.				WASHER, bulckhead fitting (36659)	1	
	851112-105			.					PLUMBING INSTL, main wheel well *(see fig. 114 for reqd)*	REF	
-49	MS21902D6			.	.				UNION (96906)	2	
-50	769923-49			.	.				TUBE ASSY, emergency pump pressure	1	
-51	769923-61			.	.				TUBE ASSY, emergency pump pressure	1	
-52	MS21902D10			.	.				UNION (96906)	2	

Fuselage Hydraulics

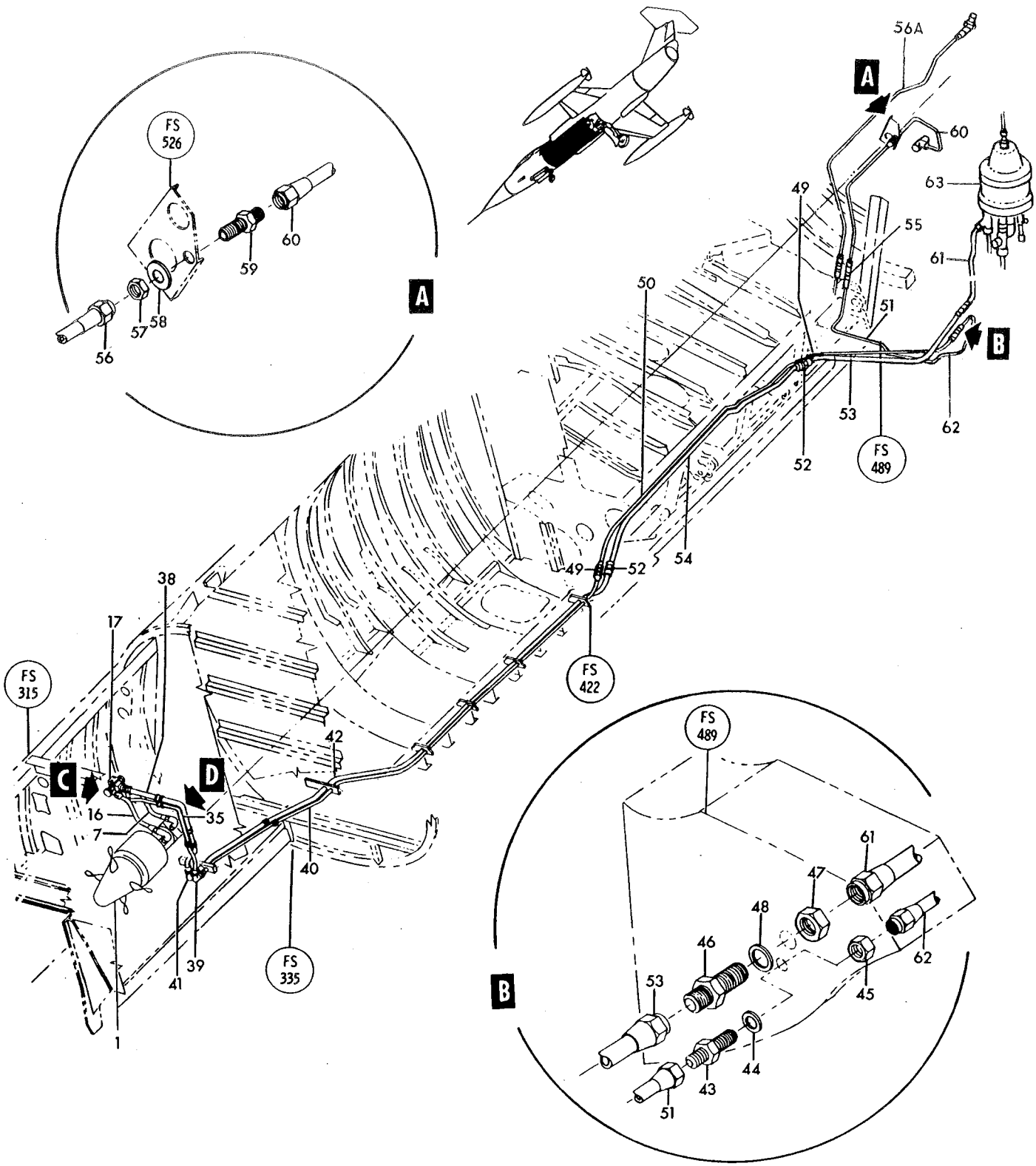

Figure 127— Ram Air Turbine and Emergency Hydraulic Piping (Sheet 1 of 2)

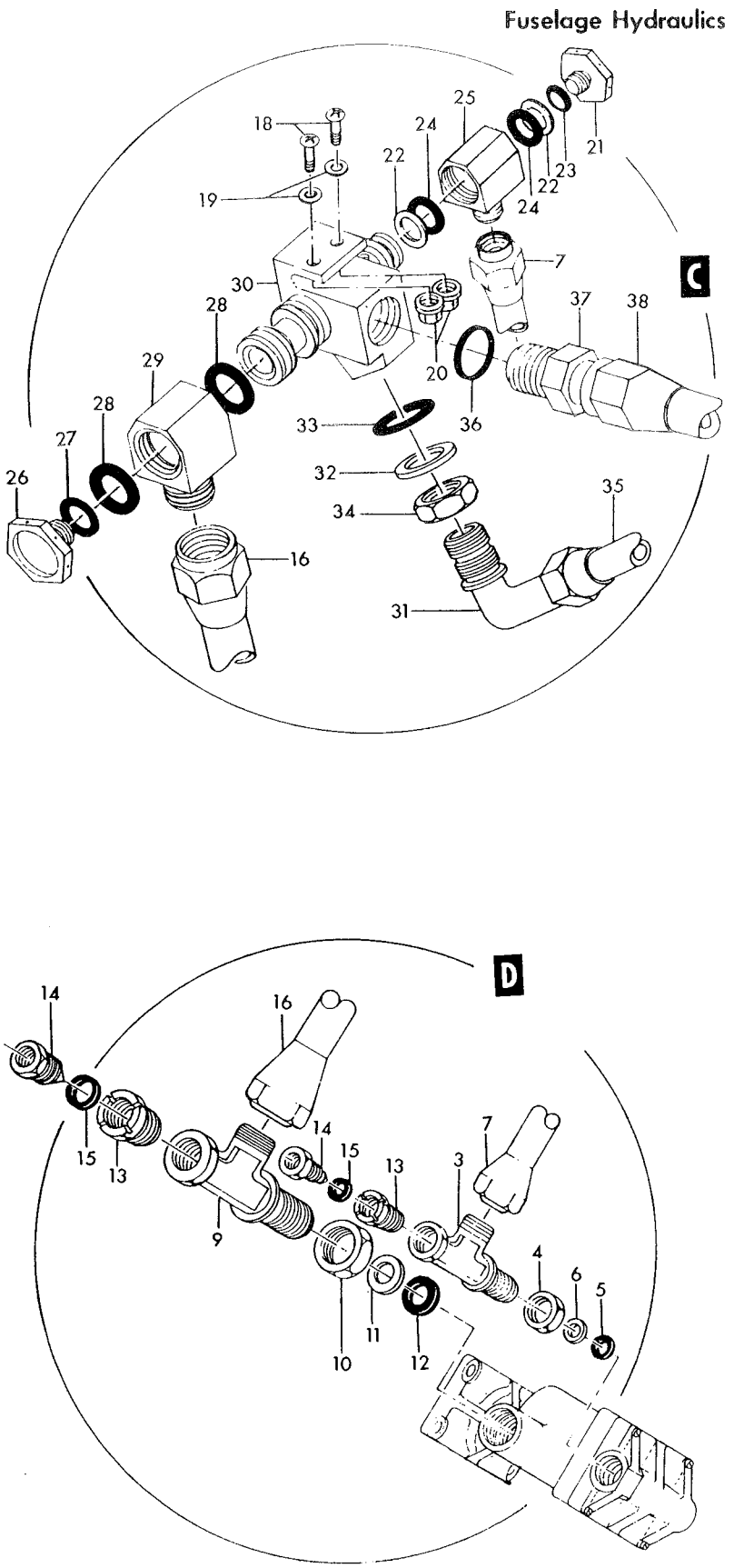

Figure 127— Ram Air Turbine and Emergency Hydraulic Piping (Sheet 2 of 2)

Figura e particolare	NDR	1 2 3 4 5 6 7 DENOMINAZIONE	Quant.	Codice applicab.
127-53	784868-33	. . TUBE ASSY, emergency pump suction	1	
-54	769923-51	. . TUBE ASSY, emergency pump suction	1	
	851077-101	. PLUMBING INSTL, RH engine compartment *(see fig. 114 for reqd)* . . .	REF	
-55	MS21902D6	. . UNION (96906)	2	
-56	776026-29	. . TUBE ASSY, emergency pump pressure *(see fig. 123 for reqd)* . . .	REF	6701-6790; 6831-
-56A	785218-115	. . TUBE ASSY, hydraulic pump drain	1	6701-6790; 6831-
-57	AN924-6D	. . NUT (88044)	1	6701-6790; 6831-
-58	AN960D916	. . WASHER (88044)	1	6701-6790; 6831-
-59	MS21924D6	. . UNION (96906)	1	6701-6790; 6831-
-60	776435-39	. TUBE ASSY, emergency pump pressure *(see fig. 123 for reqd)*	REF	6701-6790; 6831-
-61	850962-139	. TUBE ASSY, emergency pump suction *(see fig. 122 for reqd)*	REF	
-62	850962-129	. TUBE ASSY, emergency pump pressure *(see fig. 122 for reqd)*	REF	
-63	789365-103	B. RESERVOIR ASSY, hydraulic system No. 1 (Modified and reidentified to 789365-111 per AA.1F-104-OT-679A) (see T.O. 9H5-3-34-3) *(see fig. 122 for reqd)*	REF	6701-6776
	789365-111	A. RESERVOIR ASSY, hydraulic system No. 1 (Supersedes 789365-103 per AA.1F-104-OT-679A) (see Sep. Pub. whn avail.) *(see fig. 122 for reqd)* . . .	REF	6777-6790
	789365-123	E. RESERVOIR ASSY, hydraulic system No. 1 (see Sep. Publ. whn avail.) *(see fig. 122 for reqd)*	REF	6791-6830
	789365-125	D. RESERVOIR ASSY, hydraulic system No. 1 (see Sep. Publ. whn avail.) *(see fig. 122 for reqd)*	REF	6831-

A - Modified per AA.1F-104-OT-737
B - Removed per AA.1F-104-OT-679A
C - Modified per AA.1F-104-OT-787
D - Modified per AA.1F-104-OT-798
E - Only per partial incorporation of SPU system

Figura e particolare	NDR	1	2	3	4	5	6	7	DENOMINAZIONE	Quant.	Codice applicab.
									HYDRAULIC GROUND SERVICE PANEL USE ON CODE		
128	739391-101			.					PANEL INSTL, reservoir ground service *(see fig. 114 for reqd)*	REF	
- 1	18932-2			.	.				PISTON ASSY, indicator (78710)	2	
- 2	18953			.	.				SPRING, compression (78710)	1	
- 3	18931			.	.				TUBE ASSY, indicator control (78710)	1	6701-6790; 6831-
- 3A	26573-1	C.		.	.				TUBE ASSY, indicator control (78710)	1	6791-6830
									Attaching Parts		
- 4	NAS623-4-4			.	.				SCREW (80205)	2	6701-6790; 6831-
- 4A	NAS623-4-3	C.		.	.				SCREW (80205)	1	6791-6830
- 4B	NAS623-4-6	C.		.	.				SCREW (80205)	1	6791-6830
- 5	AN960D416			.	.				WASHER (88044)	2	
- 6	MS21042L4			.	.				NUT (96906)	2	
									——————☼——————		
	19014			.	.	.			NAMEPLATE, identification (empty to maximum) (78710)	1	6701-6790; 6831-
	19177			.	.	.			NAMEPLATE, identification (no. 1 system) (78710)	1	6701-6790; 6831-
	19097			.	.	.			TUBE ASSY, indicator control (78710)	1	6701-6790; 6831-
- 7	18962			.	.				SPRING, compression (78710)	1	6701-6790; 6831-
- 7A	26576	C.		.	.				SPRING, compression (78710)	1	6791-6830
- 8	18964			.	.				TUBE ASSY, indicator control (78710)	1	6701-6790; 6831;
- 8A	26572-1	C.		.	.				TUBE ASSY, indicator control (78710)	1	6791-6830
									Attaching Parts		
- 9	NAS623-4-4			.	.				SCREW (80205)	1	6701-6790; 6831-
- 9A	NAS623-4-6	C.		.	.				SCREW (80205)	1	6791-6830
-10	NAS1104-4			.	.				BOLT (80205)	1	6701-6790; 6831-
-10A	NAS1104-3	C.		.	.				SCREW (80205)	1	6791-6830
-11	LS608-8			.	.				SPACER, phenolic (36659)	1	
-12	AN960D416			.	.				WASHER (88044)	2	
-13	MS21042L4			.	.				NUT (96906)	2	
									——————☼——————		
	19013			.	.	.			NAMEPLATE, identification (empty to maximum) (78710)	1	
	19176			.	.	.			NAMEPLATE, identification (no. 2 system) (78710)	1	
	19098			.	.	.			TUBE ASSY, indicator control (78710)	1	
-14	775973-75			.	.				TUBE ASSY, hydraulic reservoir bleed	1	
-14A	775973-75			.	.				TUBE ASSY, hydraulic reservoir bleed	1	6701-6790; 6831-
-14B	852716-167	C.		.	.				TUBE ASSY, hydraulic reservoir bleed	1	6791-6830
-15	AN924-4D			.	.				NUT (88044)	2	
-17	G1673	D.		.	.				GAGE, dial indicating pressure (03936) (Lockheed spec dwg 626202-1)	2	
-18	AN924-4D			.	.				NUT (88044)	2	
-19	70B116	D.		.	.				VALVE, quick operating globe air bleed (71503) (Lockheed spec dwg 668063) (465C23-4 is an alternate) (see T.O. 9H8-4-93-3)	2	
	465C23-4	D.		.	.				VALVE, quick operating globe air bleed (91511) (Lockheed spec dwg 668063) (alternate for 70B116) (see T.O. 9H8-2-161-3)	REF	
-20	AN515-6R8			.	.				SCREW (88044)	1	
-21	761389-4			.	.				CAP ASSY, ground service panel fitting	2	
-22	NO NUMBER			.	.	.			CHAIN (No. 0 brass cadmium plated 5 in. long) (92586)	1	
-23	MS21914-6			.	.	.			CAP (96906)	1	
-24	AN924-6D			.	.				NUT (88044)	2	
-25	AN960D916			.	.				WASHER (88044)	4	
-26	MS21909D6			.	.				TEE (96906) *(see fig. 122)*	1	
-27	ER834D080806			.	.				TEE (79470) *(see fig. 122)*	1	
	790336-1			.	.				BRACKET ASSY, hydraulic reservoir ground connection	1	
-28	769570-1			.	.	.			NAMEPLATE, system No. 1 hydraulic reservoir bleed valve	1	
-29	790338-1			.	.	.			NAMEPLATE, hydraulic reservoir ground connection	1	
-30	790336-3			.	.	.			PLATE, hydraulic reservoir ground connection	1	
-33	782723-1			.	.				NAMEPLATE, hydraulic reservoir servicing instructions	1	
-35	761295			.	.				BRACKET, system No. 1 hydraulic bleed valve	1	6701-6790; 6831-
-35A	852730-101	C.		.	.				BRACKET ASSY, reservoir panel	1	6791-6830
-35B	782725-1	C.		.	.	.			NAMEPLATE, system No. 1 hydraulic reservoir pressure	1	6791-6830
-36	790949-1			.	.				BRACKET, system No. 2 hydraulic bleed valve	1	

Fuselage Hydraulics

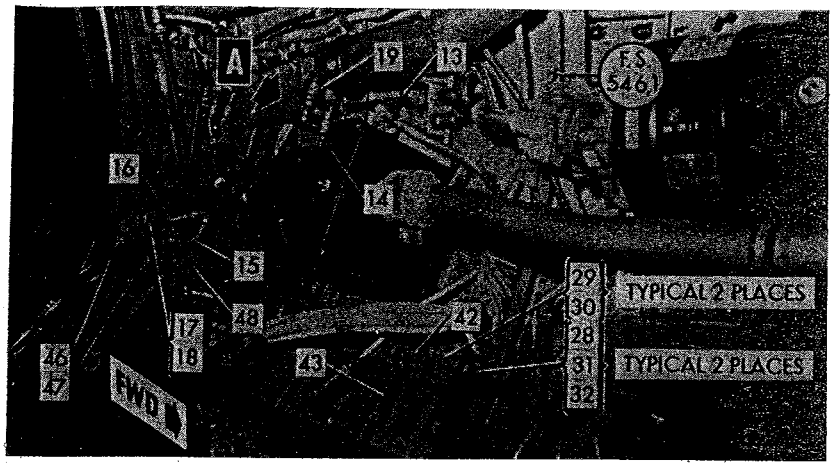

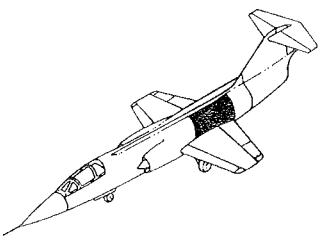

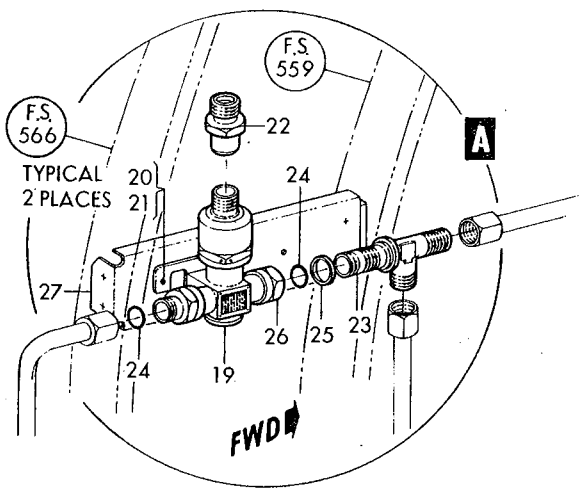

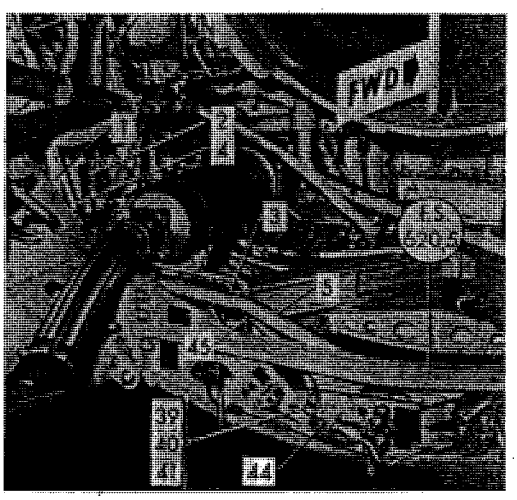

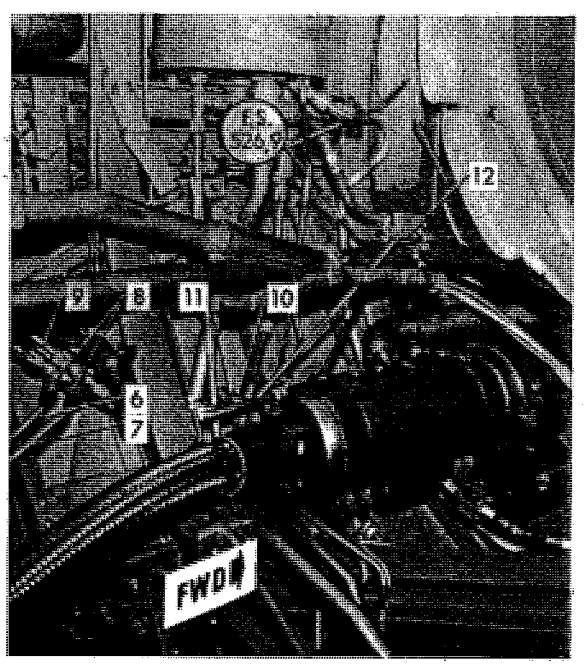

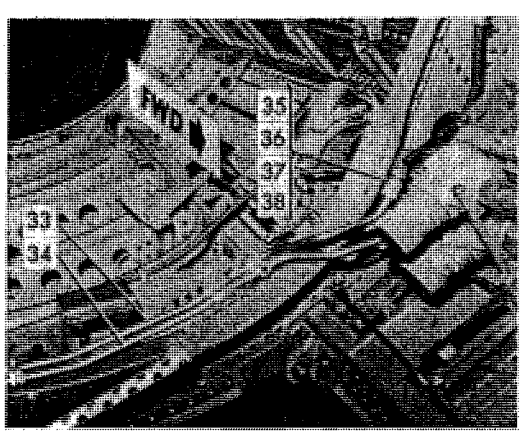

Figure 123A-Engine Compartment Piping and Equipment Fuselage Station 489 to 600 left hand

Fuselage Hydraulics

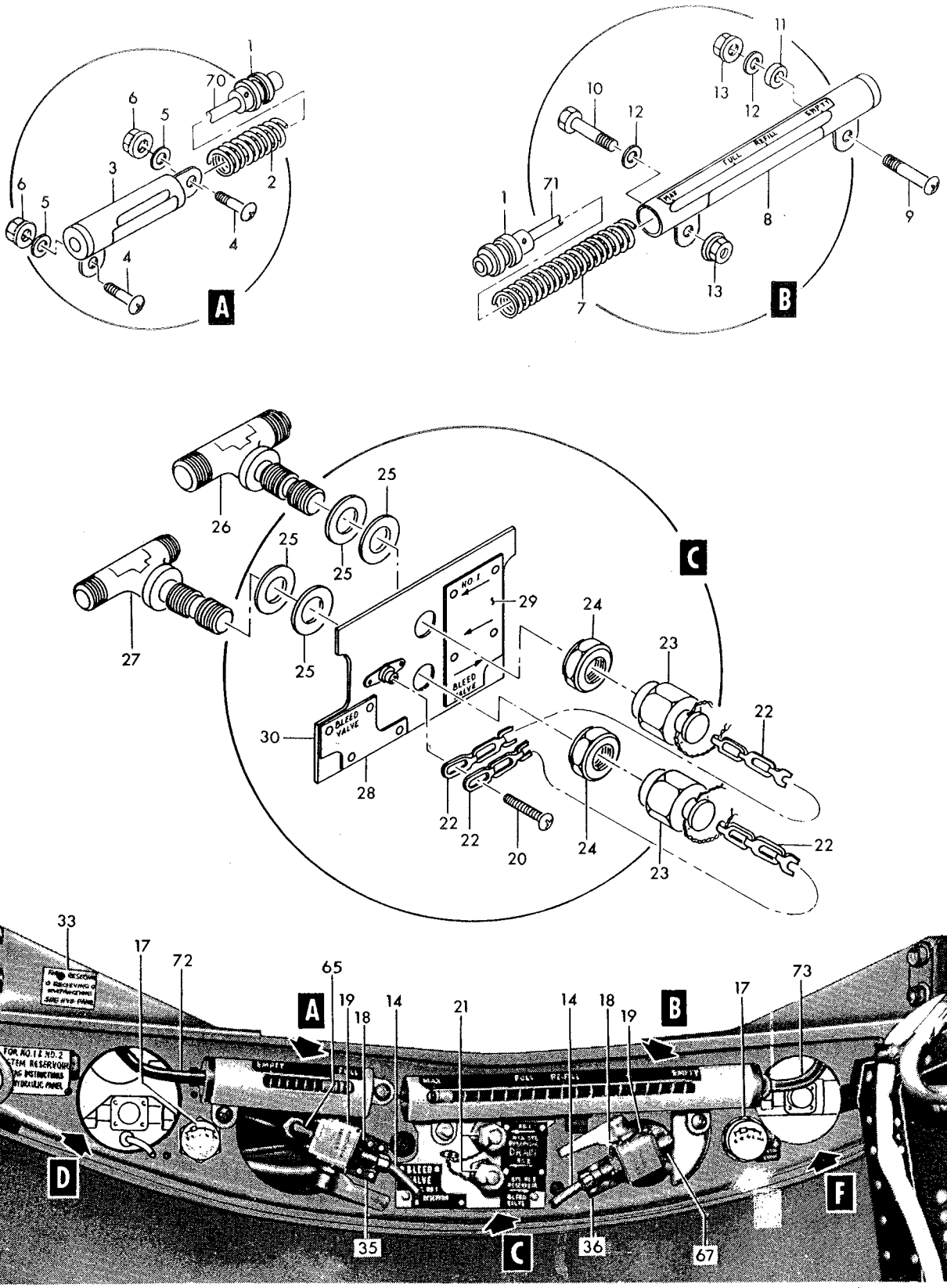

Figure 128— Hydraulic Ground Service Panel (Sheet 1 of 2)

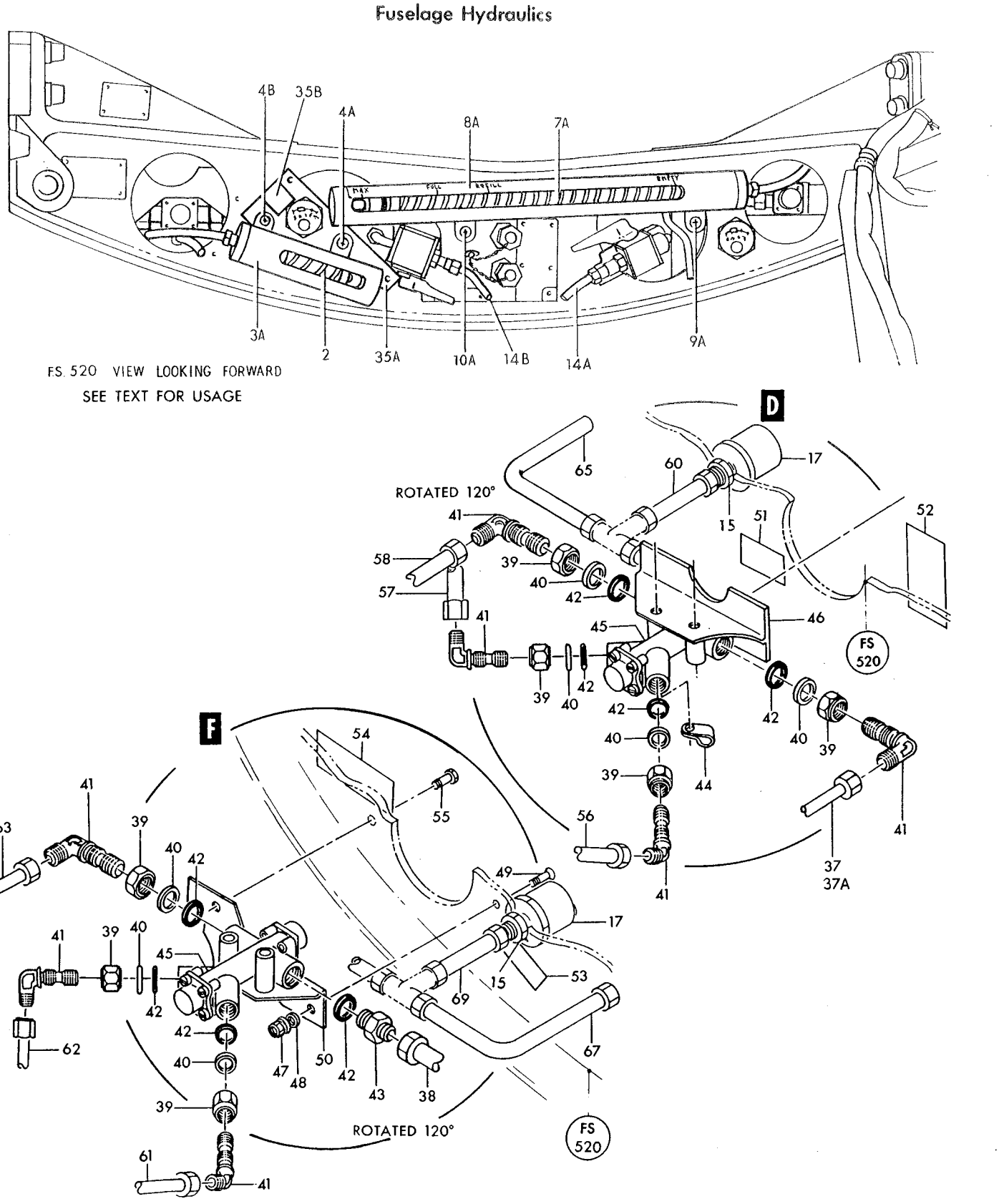

Figure 128— Hydraulic Ground Service Panel (Sheet 2 of 2)

Figura e particolare	NDR	1 2 3 4 5 6 7	DENOMINAZIONE	Quant.	Codice applicab.
128-37	798411-123	. .	TUBE ASSY, system No. 1 separator bleed	1	6701-6790; 6831-
-37A	852716-151	C. .	TUBE ASSY, system No. 1 separator bleed	1	6791-6830
-38	798411-111	. .	TUBE ASSY, system No. 2 separator bleed	1	
-39	AN6289D4	. .	NUT (88044)	7	
-40	LS4764-4	. .	RING, teflon hydraulic backup (36659)	7	
-41	MS21908D4	. .	ELBOW (96906)	7	
-42	LS4634-4	. .	GASKET, boss straight thread tube fitting (36659) (whn exh use NAS1596-4)	8	
	NAS1596-4	. .	PACKING (80205) (use LS4634-4 until exh)	REF	
-43	MS21902D4	. .	UNION (96906)	1	
-44	TA4C69S4T	. .	CLAMP, loop type (84971)	1	
-45	A62195	A. .	VALVE, hydraulic bleed (A0303) (00502) (Lockheed spec dwg 670191-101) (Reworked and modified to A62195-1 per AA.1F-104-OT-777A and AA.1F-104-OT-780) (see T.O. 9H8-2-159-3)	2	6701-6795
	A62195-1	B. .	VALVE, hydraulic bleed (A0303) (00502) (Lockheed spec dwg 670191-103) (Supersedes A62195 per AA.1F-104-OT-777A and AA.1F-104-OT-780) (see sep. pub. whn avail.)	2	
			Attaching Parts		
	NAS623-3-18	. .	SCREW (80205)	2	
	AN960D10	. .	WASHER (88044)	2	
	MS21042L3	. .	NUT (96906)	2	
-46	798406-101	. .	SUPPORT, No. 1 hydraulic system air-oil separator bleed valve	1	
-47	MS21042L3	. .	NUT (96906)	1	
-48	AN960D10	. .	WASHER (88044)	1	
-49	NAS623-3-5	. .	SCREW (80205)	1	
-50	798407-101	. .	SUPPORT ASSY, system No. 2 hydraulic air-oil separator bleed valve	1	
-51	782725-1	. .	NAMEPLATE, system No. 1 hydraulic reservoir pressure	1	6701-6790; 6831-
-52	798281-101	. .	NAMEPLATE, system No. 1 hydraulic air-oil separator bleed valve	1	
-53	798399-101	. .	NAMEPLATE, system No. 2 hydraulic reservoir pressure	1	
-54	798373-101	. .	NAMEPLATE, system No. 2 hydraulic air-oil separator bleed valve	1	
-55	NAS1105-6D	.	BOLT (80205) *(see fig. 129 for reqd)*	REF	
-56	798411-115	.	TUBE ASSY, system No. 1 hydraulic pressure *(see fig. 122 for reqd)*	REF	
-57	798411-113	.	TUBE ASSY, system No. 1 hydraulic pressure *(see fig. 122 for reqd)*	REF	6701-6790; 6831-
-58	798411-121	.	TUBE ASSY, system No. 1 separator bleed *(see fig. 123 for reqd)*	REF	
-60	798411-151	.	TUBE ASSY, system No. 1 reservoir pressure *(see fig. 122 for reqd)*	REF	
-61	798411-103	.	TUBE ASSY, system No. 2 hydraulic pressure *(see fig. 123 for reqd)*	REF	
-62	798411-101	.	TUBE ASSY, system No. 2 hydraulic pressure *(see fig. 123 for reqd)*	REF	
-63	798411-109	.	TUBE ASSY, system No. 2 separator bleed *(see fig. 123 for reqd)*	REF	
-65	798411-147	.	TUBE ASSY, hydraulic reservoir bleed *(see fig. 122 for reqd)*	REF	6701-6790; 6831-
-67	798411-145	.	TUBE ASSY, hydraulic reservoir bleed *(see fig. 123 for reqd)*	REF	
-69	798411-141	.	TUBE ASSY, system No. 2 hydraulic pressure *(see fig. 123 for reqd)*	REF	
-70	24357-1	.	CABLE ASSY (system No. 1 hydraulic fluid level indicator control) (78710) (NHA 789365-103)	1	
-71	24357-2	.	CABLE ASSY (system No. 2 hydraulic fluid level indicator control) (78710) (NHA 789366-103)	1	
-72	765337-49	.	TUBE ASSY, system No. 1 hydraulic fluid level indicating system *(see fig. 122 for reqd)*	REF	6701-6790; 6831-
-73	765337-47	.	TUBE ASSY, system No. 2 hydraulic fluid level indicating system *(see fig. 123 for reqd)*	REF	6701-6790; 6831-

A - Removed per AA.1F-104-OT-777
B - Reqd per AA.1F-104-OT-777
C - Only per partial incorporation of SPU system
D - All parts marked with letter D serve also to install partial incorporation of SPU system

Figura e particolare	NDR	1 2 3 4 5 6 7 DENOMINAZIONE	Quant.	Codice applicab.
		HYDRAULIC ACCESS DOOR HINGES AND LATCHES		
129	760624-5L	FITTING INSTL, fus sta 520 to 579 LH *(see fig. 31 for reqd)*	REF	
- 1	762205	FITTING ASSY, hydraulic access door hook	1	
- 2	750369-4	BEARING ASSY, hook fitting pin	1	
- 3	762194	PLATE, hydraulic access door serrated	1	
- 4	762195	SHIM	AR	
- 5	726247-6	BOLT, 12 point high tensile strenght	1	
- 6	726247-5	BOLT, 12 point high tensile strenght	1	
- 7	726248-3	WASHER, high strenght	2	
- 8	MS20002-7	WASHER (96906)	2	
- 9	EB070	NUT, 12 point high tension (72962)	2	
-10	762206	FITTING ASSY, hydraulic access door hook	1	
-11	750369-3	BEARING ASSY, hook fitting pin	1	
-12	762342-3	PLATE, hydraulic access door serrated	1	
-13	762207	FITTING ASSY, hydraulic access door hook	1	
-14	750369-3	BEARING ASSY, hook fitting pin	1	
-15	762342-4	PLATE, hydraulic access door serrated	1	
-16	762296	SHIM	AR	
-17	MS20006-18	BOLT (96906)	4	
-18	MS20002C6	WASHER (96906)	4	
-19	MS20002-6	WASHER (96906)	4	
-20	EB064	NUT, 12 point high tension (72962)	4	
-21	762208	FITTING ASSY, hydraulic access door hook	1	
-22	750369-4	BEARING, hook fitting pin	1	
-23	762343	PLATE, hydraulic access door serrated	1	
-24	762297	SHIM	AR	
-25	MS20005-18	BOLT (96906)	2	
-26	MS20002C5	WASHER (96906)	2	
-27	MS20002-5	WASHER (96906)	2	
-28	EB054	NUT, 12 point high tension (72962)	2	
	760624-503	FITTING INSTL, fus sta 520 to 579 RH *(see fig. 31 for reqd)*	REF	
-29	762201	FITTING, hydraulic access door hinge	1	
-30	762195	SHIM	AR	
-31	726247-5	BOLT, 12 point high tensile strength	1	
-32	726247-4	BOLT, 12 point high tensile strength	1	
-33	726266-3	WASHER, high strength conical	2	
-34	MS20002-7	WASHER (96906)	2	
-35	EB070	NUT, 12 point high tension (72962)	2	
-36	762202	FITTING, hydraulic access door hinge	1	
-37	762203	FITTING, hydraulic access door hinge	1	
-38	762539	SHIM	AR	
-39	NAS586-14	SCREW (80205)	4	
-40	MS20002-6	WASHER (96906)	4	
-41	EB064	NUT, 12 point high tension (72962)	4	
-42	762204	FITTING, hydraulic access door hinge	1	
-43	762540	SHIM	AR	
-44	NAS585-14	SCREW (80205)	2	
-45	MS20002-5	WASHER (96906)	2	
-46	EB054	NUT, 12 point high tension (72962)	2	
	760624-102	FITTING INSTL, fus sta 520 to 579 RH *(see fig. 31 for reqd)*	REF	
-47	762187R	FITTING, hydraulic access door RH	1	
-48	799014-104	FITTING, hydraulic access door RH	1	
-49	784584-2	FITTING, hydraulic access door RH	1	
	760624-101	FITTING INSTL, fus sta 520 to 579 LH *(see fig. 31 for reqd)*	REF	
-50	784584-1	FITTING, hydraulic access door LH	1	
-51	799014-103	FITTING, hydraulic access door LH	1	
-52	762187L	FITTING, hydraulic access door LH	1	
	767579-127	DOOR INSTL, fus sta 520 to 579 *(see fig. 114 for reqd)*	REF	6701-6815
	767579-141	DOOR INSTL, fus sta 520 to 579 *(see fig. 114 for reqd)*	REF	6816-
-53	786583-1	TEE, hydraulic door access shear	2	

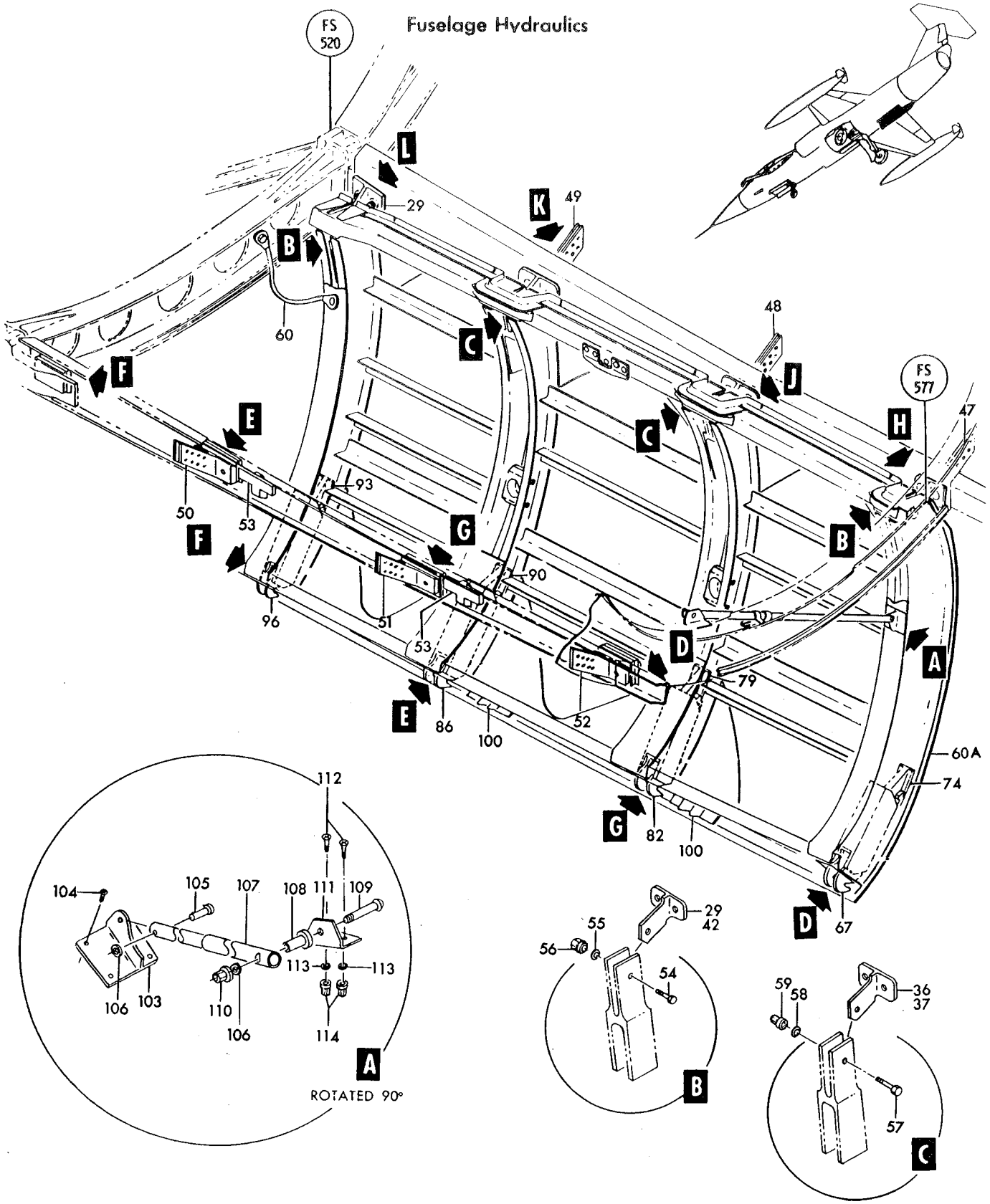

Figure 129— Hydraulic Access Door Hinges and Latches (Sheet 1 of 2)

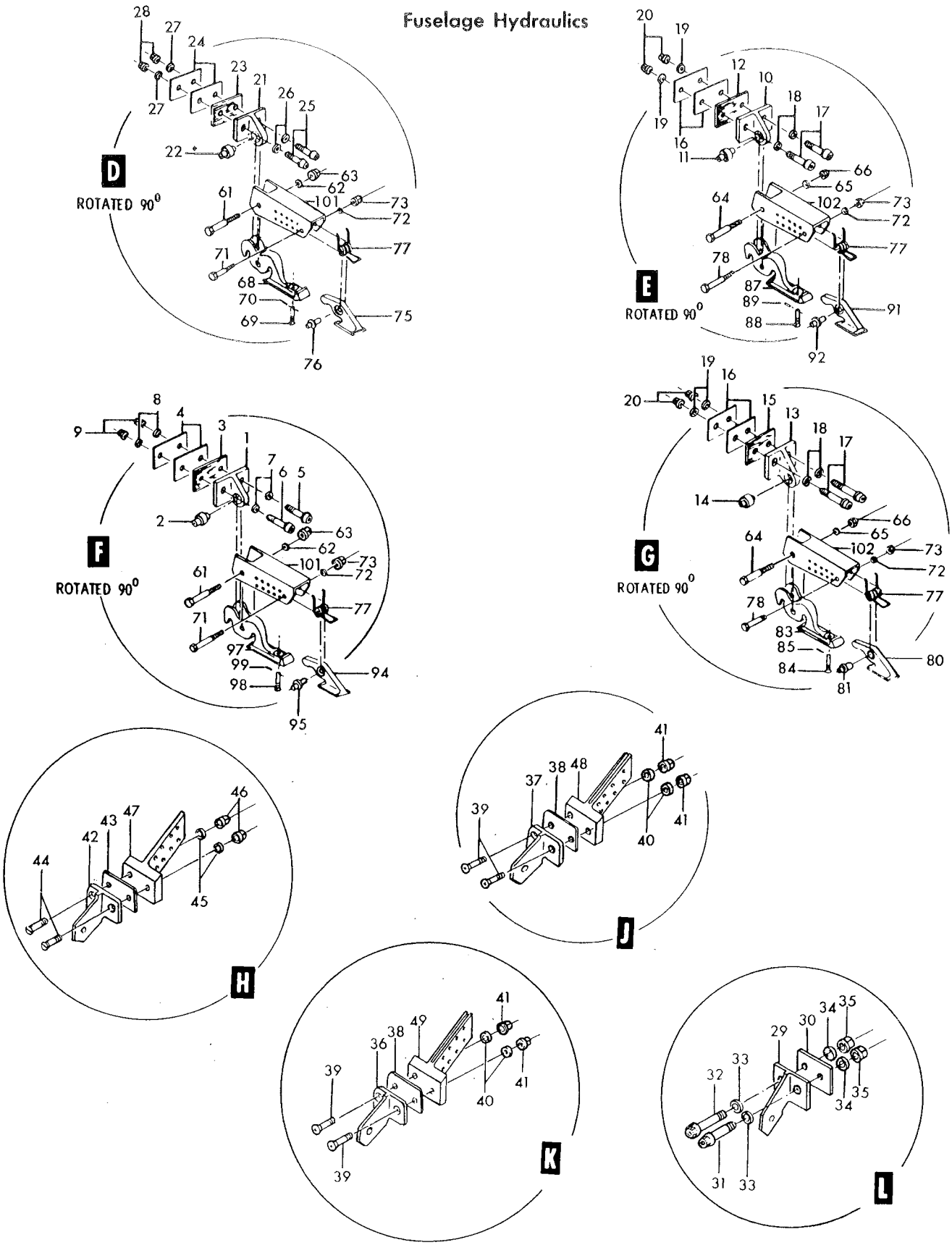

Figure 129— Hydraulic Access Door Hinges and Latches (Sheet 2 of 2)

Figura e particolare	NDR	1	2	3	4	5	6	7	DENOMINAZIONE	Quant.	Codice applicab.
									Attaching Parts		
129	NAS623-3-6								SCREW (80205)	4	
	MS21042L3								NUT (96906)	4	
									*		
-54	726240-3								BOLT, hydraulic access door	2	
-55	AN960D416								WASHER (88044)	2	
-56	MS21042L4								NUT (96906)	2	
-57	726241-3								BOLT, hydraulic access door	2	
-58	AN960D516								WASHER (88044)	2	
-59	MS21042L5								NUT (96906)	2	
-60	MS25083-4DE8								JUMPER (96906)	1	
									Attaching Parts		
	NAS1105-6D								BOLT (80205)	1	
	AN5-4								BOLT (88044)	1	
	AN960D516								WASHER (88044)	2	
	MS21042L5								NUT (96906)	2	
									*		
	767579-129								DOOR ASSY fus sta 520 to 579 complete	1	6701-6815
	767579-143								DOOR ASSY, fus sta 520 to 579 complete	1	6816-
	784016-103								. PLUMBING INSTL, hydraulic service door *(see fig. 131 and 132)*	1	6701-6815
	784016-109								. PLUMBING INSTL, hydraulic service door *(see fig. 131 and 132)*	1	6816-
-60A	767579-131								. DOOR ASSY fus sta 520 to 579 *(see fig. 130)*	1	
-61	726240-4								. . BOLT, hydraulic access door	2	
-62	AN960D416								. . WASHER (88044)	2	
-63	MS21042L4								. . NUT (96906)	2	
-64	726241-4								. . BOLT, hydraulic access door	2	
-65	AN960D516								. . WASHER (88044)	2	
-66	MS21042L5								. . NUT (96906)	2	
-67	761939-6								. . HOOK ASSY, hydraulic access door	1	
-68	761939-4								. . . HOOK, hydraulic access door end (fus sta 577)	1	
-69	726242-3								. . . SCREW ASSY, hydraulic access door hook	1	
-70	NAS561P2-6								. . . ROLLPIN (80205)	1	
-71	726245-3								. . BOLT, door trigger	2	
-72	AN960D10								. . WASHER (88044)	4	
-73	MS21042L3								. . NUT (96906)	4	
-74	762192-6								. . TRIGGER ASSY, hydraulic access door	1	
-75	762192-4								. . . TRIGGER, hydraulic access door (fus sta 577)	1	
-76	726239-3								. . . BUSHING, hydraulic access door trigger	1	
-77	726238-3								. . SPRING, hydraulic access door trigger	4	
-78	726245-4								. . BOLT, hydraulic access door trigger	2	
-79	762193-6								. . TRIGGER ASSY, hydraulic access door	1	
-80	762193-4								. . . TRIGGER, hydraulic access door (fus sta 559)	1	
-81	726239-4								. . . BUSHING, hydraulic access door trigger	1	
-82	761940-6								. . HOOK ASSY, hydraulic access door	1	
-83	761940-4								. . . HOOK, hydraulic access door (fus sta 559)	1	
-84	726242-3								. . . SCREW ASSY, hydraulic access door hook	1	
-85	NAS561P2-6								. . . ROLLPIN (80205)	1	
-86	761940-5								. . HOOK ASSY, hydraulic access door	1	
-87	761940-3								. . . HOOK, hydraulic access door (fus sta 539)	1	
-88	726242-3								. . . SCREW ASSY, hydraulic access door hook	1	
-89	NAS561P2-6								. . . ROLLPIN (80205)	1	
-90	762193-5								. . TRIGGER ASSY, hydraulic access door	1	
-91	762193-3								. . . TRIGGER, hydraulic access door (fus sta 539)	1	
-92	726239-4								. . . BUSHING, hydraulic access door trigger	1	
-93	762192-5								. . TRIGGER ASSY, hydraulic access door	1	
-94	762192-3								. . . TRIGGER, hydraulic access door (fus sta 523)	1	
-95	726239-3								. . . BUSHING, hydraulic access door trigger	1	
-96	761939-5								. . HOOK ASSY, hydraulic access door	1	
-97	761939-3								. . . HOOK, hydraulic access door end	1	
-98	726242-3								. . . SCREW ASSY, hydraulic access door hook	1	

Figura e particolare	NDR	1 2 3 4 5 6 7 DENOMINAZIONE	Quant.	Codice applicab.
129-99	NAS561P2-6	ROLLPIN (80205)	1	
-100	786582-1	FITTING, hydraulic access door sheap	2	
		Attaching Parts		
	NAS1203-5	SCREW (80205)	4	
	NAS623-3-2	SCREW (80205)	4	
	MS21042L3	NUT (96906)	8	
		*		
	784018-1	BRACKET INSTL, hydraulic service door *(see fig. 130)*	1	6701-6765
	784018-101	BRACKET INSTL, hydraulic service door *(see fig. 130)*	1	6766-
	775707-1	HOUSING ASSY, hydraulic access door *(see fig. 130 for reqd)*	REF	
-101	762190	HOUSING, hydraulic access door hook	1	
	775708-1	HOUSING ASSY, hydraulic access door *(see fig. 130 for reqd)*	REF	
-102	762191	HOUSING, hydraulic access door hook	1	
	762391-4	BRACKET INSTL, hydraulic access door prop *(see fig. 130 for reqd)*	REF	
-103	762392	BRACKET, hydraulic access door prop	1	
		Attaching Parts		
-104	NAS623-3-2	SCREW (80205)	4	
		*		
	762391-3	PROP INSTL, hydraulic access door *(see fig. 114 for reqd)*	REF	
	MS24665-132	COTTER PIN (96906)	1	
-105	MS20392-2C15	PIN (96906)	1	
-106	AN960-10L	WASHER (88044)	2	
-107	761983-3	PROP ASSY, hydraulic access door	1	
-108	762064	FITTING, hydraulic compartment cover prop attachment	1	
-109	NAS623-3-14	SCREW (80205)	1	
-110	MS21042L3	NUT (96906)	1	
	786459-7	SPLICE INSTL, fus sta 579 lower *(see fig. 31 for reqd)*	REF	
	762391-5	BRACKET INSTL, hydraulic access door prop	1	
-111	762391-7	BRACKET, access door prop	1	
		Attaching Parts		
-112	NAS623-3-4	SCREW (80205)	2	
-113	AN960D10	WASHER (88044)	2	
-114	MS21042L3	NUT (96906)	2	
		*		

Figura e particolare	NDR	DENOMINAZIONE 1 2 3 4 5 6 7	Quant.	Codice applicab.
		HYDRAULIC ACCESS DOOR SEALS AND STRUCTURE		
130	767579-131	DOOR ASSY, fus sta 520 to 579 *(see fig. 129 for reqd)*	REF	
-1	760624-39	RIB ASSY, fus sta 520 to 579	1	
-2	775707-1	HOUSING ASSY, hydraulic access door hook *(see fig. 129)*	1	
-3	762292	HOUSING, hydraulic access door hinge	1	
-4	767579-5	RIB ASSY, fus sta 520 to 579	1	
-5	767580-1	FITTING, fwd attachment ventral fin	1	
		Attaching Parts		
-6	NAS1105-30D	BOLT (80205)	2	
-7	AN960D516	WASHER (88044)	2	
-8	MS21042L5	NUT (96906)	2	
		——————✲——————		
-9	767582-1	SHIM, fwd ventral fin fitting	2	
-10	762199	HOUSING, hydraulic access door hinge	1	
-11	775708-1	HOUSING ASSY, hydraulic access door hook *(see fig. 129)*	1	
-12	767579-7	RIB ASSY, fus sta 520 to 579	1	
-13	767581-1	FITTING, aft attachment ventral fin	1	
		Attaching Parts		
-14	NAS1104-30	BOLT (80205)	2	
-15	AN960D416	WASHER (88044)	2	
-16	MS21042L4	NUT (96906)	2	
		——————✲——————		
-17	767583-1	SHIM, aft ventral fin fitting	2	
-18	762200	HOUSING, hydraulic access door hinge	1	
-19	775708-1	HOUSING ASSY, hydraulic access door hook *(see fig. 129)*	1	
-20	767579-123	RIB ASSY, fus sta 520 to 579	1	
-21	762291	HOUSING, hydraulic access door hinge	1	
-22	775707-1	HOUSING ASSY, hydraulic access door hook *(see fig. 129)*	1	
	762391-4	BRACKET INSTL, hydraulic access door prop *(see fig. 129)*	1	
-23	760624-19	STIFFENER, fus sta 520 to 579	1	
-24	760624-20	STIFFENER, fus sta 520 to 579	1	
-25	760624-21	STIFFENER, fus sta 520 to 579	1	
-26	760624-22	STIFFENER, fus sta 520 to 579	1	
-27	760624-23	STIFFENER, fus sta 520 to 579	1	
-28	760624-25	STIFFENER, fus sta 520 to 579	1	
-29	760624-26	STIFFENER, fus sta 520 to 579	1	
-30	760624-27	STIFFENER, fus sta 520 to 579	1	
-31	760624-28	STIFFENER, fus sta 520 to 579	1	
-32	760624-29	STIFFENER, fus sta 520 to 579	1	6701-6723
	851511-101	STIFFENER, fus sta 520 to 579	1	6724-
-33	760624-30	STIFFENER, fus sta 520 to 579	1	6701-6723
	851510-101	STIFFENER, fus sta 520 to 579	1	6724-
-34	760624-31	STIFFENER, fus sta 520 to 579	1	
-35	762263-3	LONGERON	1	
-36	MS27253-1	NAMEPLATE (96906)	1	
-40	762264	LONGERON	1	
-41	762165	SKIN ASSY, hydraulic access door	1	
	763195-503	SEAL INSTL, hydraulic access door	1	
-42	763195-5	RETAINER, seal	3	
-43	763378-3	SEAL, hydraulic access door longeron	2	
-44	763379	SEAL, hydraulic access door hinge	1	
-45	763195-15	RETAINER, seal	1	
-46	763195-13	RETAINER, seal	1	
-47	763195-19	RETAINER, seal	2	
-48	763195-14	RETAINER, seal	1	
-49	763378-4	SEAL, hydraulic access door longeron	1	
-50	763380	SEAL, hydraulic access door aft hinge	REF	6701-6765
	784018-1	BRACKET INSTL, hydraulic service door *(see fig. 129 for reqd)*	REF	6766-
	784018-101	BRACKET INSTL, hydraulic service door *(see fig. 129 for reqd)*	1	
-51	765192-1	BRACKET ASSY, hydraulic panel pressure transmitter		

Fuselage Hydraulics

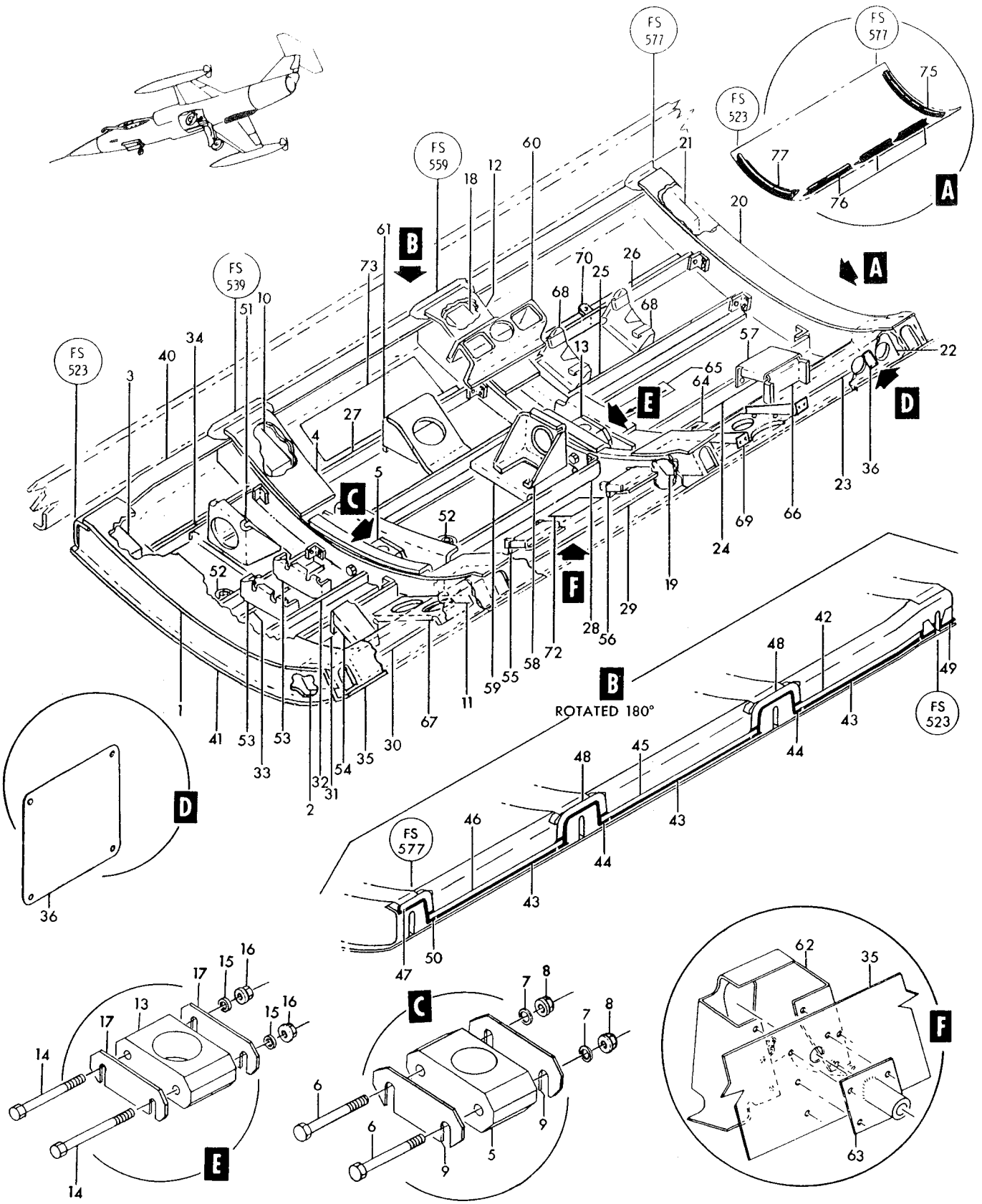

Figure 130— Hydraulic Access Door Seals and Structure

Figura e particolare	NDR	1 2 3 4 5 6 7 DENOMINAZIONE	Quant.	Codice applicab.
130-52	764477	FITTING, 1/4 inch overboard drain hydraulic panel *(see fig. 132)*	2	
-53	772827-1	BRACKET, system No. 1 hydraulic panel accumulator	2	
-54	764583	BRACKET ASSY, hydraulic panel pressure switch	1	
-55	767873-1	BRACKET ASSY, hydraulic panel filter	1	
-56	772355-1	BRACKET ASSY, system No. 2 return filter	1	
-57	767875-1	BRACKET ASSY, hydraulic panel filter	1	
-58	765192-5	BRACKET, hydraulic panel pressure transmitter	1	
-59	773658-1	SUPPORT, hydraulic panel pressure transmitter bracket	1	
-60	765191-3	BRACKET ASSY, hydraulic panel pressure gage	1	
-61	762400	BRACKET ASSY, hydraulic panel ground test valve	1	
-62	780501-1	SUPPORT ASSY, speed brake shutoff valve	1	
-63	780500-1	GUIDE ASSY, speed brake shutoff valve bolt	1	
-64	771668-1	DECAL, free flow (hydraulic system)	1	
-65	771666-1	DECAL, direction of flow (hydraulic system)	1	
-66	767876-1	SUPPORT, hydraulic panel filter bracket	1	
-67	764457	BRACKET ASSY, pressure control valve	1	
-68	772825-1	BRACKET, system No. 2 hydraulic panel accumulator	2	
-69	852063-101	A. BRACKET, hydraulic door dive flap selector valve	1	
-70	TA102-2-6-10	BRACKET (84971)	1	
-72	798929-101	NAMEPLATE, speed brake shutoff valve	1	
-73	797675-1	NAMEPLATE, hydraulic service door hydraulic system ground test	1	
	760971-603	PANEL INSTL, hydraulic *(see fig. 131)*	1	
	763195-501	SEAL INSTL, hydraulic access door *(see fig. 114 for reqd)*	REF	
-75	763374	SEAL, hydraulic access door	1	
-76	763376	SEAL, hydraulic access door forward longeron	3	
-77	763375	SEAL, hydraulic access door	1	

A - Reqd per AA.1F-104-OT-688

Figura e particolare	NDR	1 2 3 4 5 6 7 DENOMINAZIONE	Quant.	Codice applicab.
		HYDRAULIC PANEL SWIVELS AND PIPING		
131	760971-603	. PANEL INSTL, hydraulic *(see fig. 130 for reqd)*	REF	
- 1	772385-5	. . SWIVEL ASSY, hydraulic panel	6	
		Attaching Parts		
	NAS517-3-3	. . SCREW (80205)	2	
	MS21042L3	. . NUT (96906)	2	
		———————*———————		
- 2	726692-3	. . . PLUG, hydraulic panel swivel fitting	1	
- 3	LS4634-5	. . . GASKET, boss straight thread tube fitting (36659) (whn exh use NAS1596-5)	1	
	NAS1596-5	. . . PACKING (80205) (use LS4634-5 until exh)	REF	
- 4	727622-1	. . . FITTING, hydraulic panel swivel	1	
- 5	114-7377	. . . PACKING, O Ring (86579)	2	
- 6	MS28782-12	. . . RING (96906)	2	
- 7	727623-1	. . . BODY, hydraulic panel swivel	1	
- 8	772385-6	. . SWIVEL ASSY, hydraulic panel	4	
		Attaching Parts		
	NAS517-3-3	. . SCREW (80205)	2	
	MS21042L3	. . NUT (96906)	2	
		———————*———————		
- 9	726692-3	. . . PLUG, hydraulic panel swivel fitting	1	
-10	LS4634-5	. . . GASKET, boss straight thread tube fitting (36659) (whn exh use NAS1596-5)	1	
	NAS1596-5	. . . PACKING (80205) (use LS4634-5 until exh)	REF	
-11	727622-1	. . . FITTING, hydraulic panel swivel	1	
-12	114-7377	. . . PACKING, O Ring (86579)	2	
-13	MS28782-12	. . . RING (96906)	2	
-14	727623-2	. . . BODY, hydraulic panel swivel	1	
-15	772385-7	. . SWIVEL ASSY, hydraulic panel	1	
		Attaching Parts		
	NAS517-3-3	. . SCREW (80205)	2	
	MS21042L3	. . NUT (96906)	2	
		———————*———————		
-16	726692-3	. . . PLUG, hydraulic panel swivel fitting	1	
-17	LS4634-5	. . . GASKET, boss straight thread tube fitting (36659) (whn exh use NAS1596-5)	1	
	NAS1596-5	. . . PACKING (80205) (use LS4634-5 until exh)	REF	
-18	727622-3	. . . FITTING, hydraulic panel swivel	1	
-19	114-7377	. . . PACKING, O Ring (86579)	2	
-20	MS28782-12	. . . RING (96906)	2	
-21	727623-3	. . . BODY, hydraulic panel swivel	1	
-22	760971-3	. . SHIM, hydraulic panel	11	
-23	789861-23	. TUBE ASSY, No. 1 system hydraulic return *(see fig. 123 for reqd)* . . .	REF	6701-6790; 6831-
-24	776435-39	. TUBE ASSY, emergency pump pressure *(see fig. 123 for reqd)*	REF	6701-6790; 6831-
-25	785218-109	. TUBE ASSY, No. 1 system hydraulic pressure *(see fig. 124 for reqd)* . .	REF	6701-6790; 6831-
-26	785218-113	. TUBE ASSY, No. 1 system hydraulic return *(see fig. 124 for reqd)* . . .	REF	6701-6790; 6831-
-27	776435-47	. TUBE ASSY, No. 2 system hydraulic pressure *(see fig. 124 for reqd)* . .	REF	6701-6790; 6831-
-28	776435-49	. TUBE ASSY, dive flap down *(see fig. 126 for reqd)*	REF	6701-6790; 6831-
-29	776435-51	. TUBE ASSY, No. 2 system hydraulic pressure *(see fig. 124 for reqd)* . .	REF	6701-6790; 6831-
-30	776435-53	. TUBE ASSY, No. 2 system hydraulic return *(see fig. 124 for reqd)* . . .	REF	6701-6790; 6831-
-31	785218-41	. TUBE ASSY, No. 2 system hydraulic pressure *(see fig. 124 for reqd)* . .	REF	6701-6790; 6831-
-32	776435-57	. TUBE ASSY, dive flap up *(see fig. 126 for reqd)*	REF	
-33	798411-133	. TUBE ASSY, system No. 2 hydraulic return *(see fig. 123 for reqd)* . . .	REF	6701-6790; 6831-
	784016-103	. PLUMBING INSTL, hydraulic service door *(see fig. 129 for reqd)* . . .	REF	6701-6815
	784016-109	. PLUMBING INSTL, hydraulic service door *(see fig. 129 for reqd)* . . .	REF	6816-
-34	775892-75	. . TUBE ASSY, No. 1 system hydraulic return	1	
-35	775892-77	. . TUBE ASSY, emergency pump pressure	1	
-36	775892-79	. . TUBE ASSY, No. 2 system hydraulic return	1	
-37	775892-81	. . TUBE ASSY, No. 1 system hydraulic pressure	1	
-38	775892-83	. . TUBE ASSY, No. 1 system hydraulic return	1	

Fuselage Hydraulics

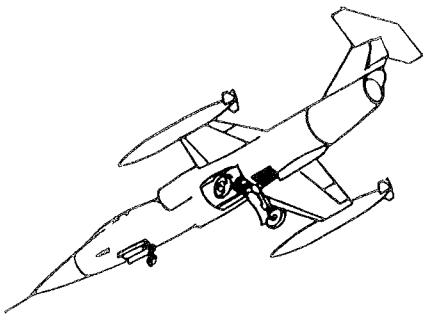

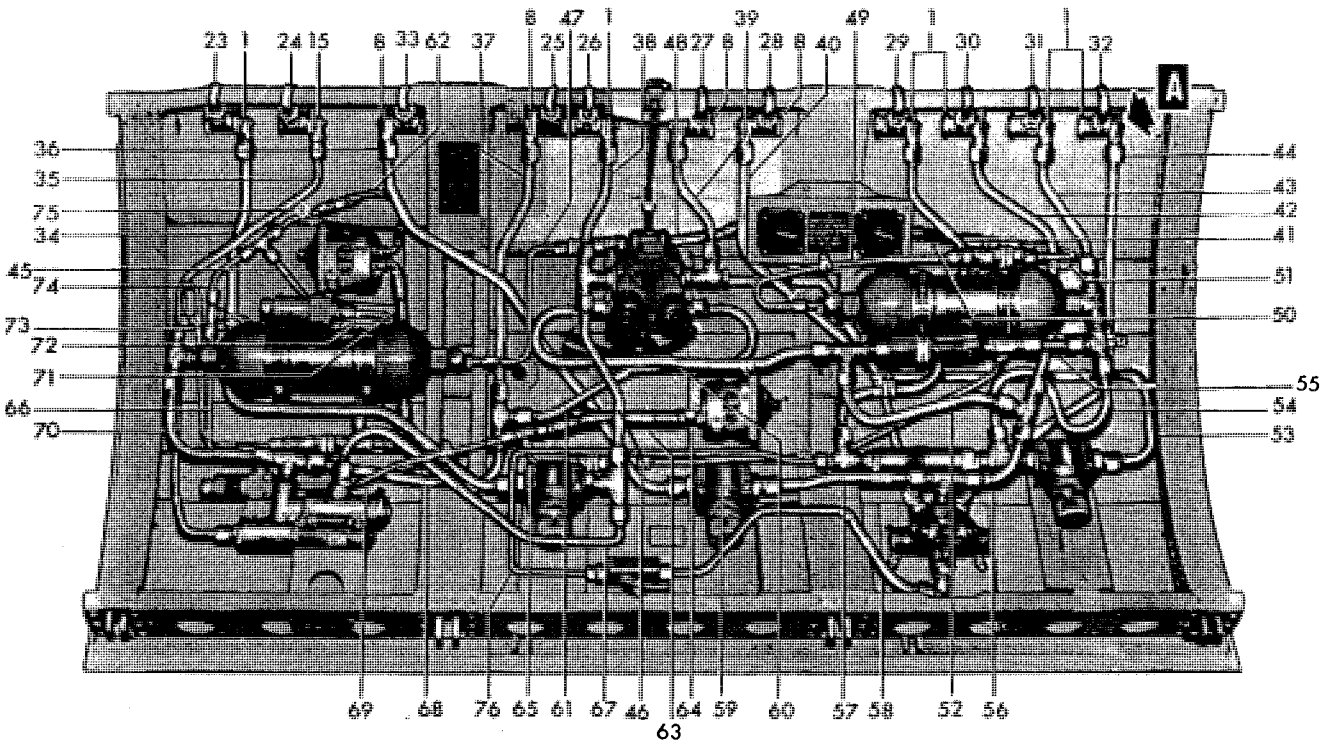

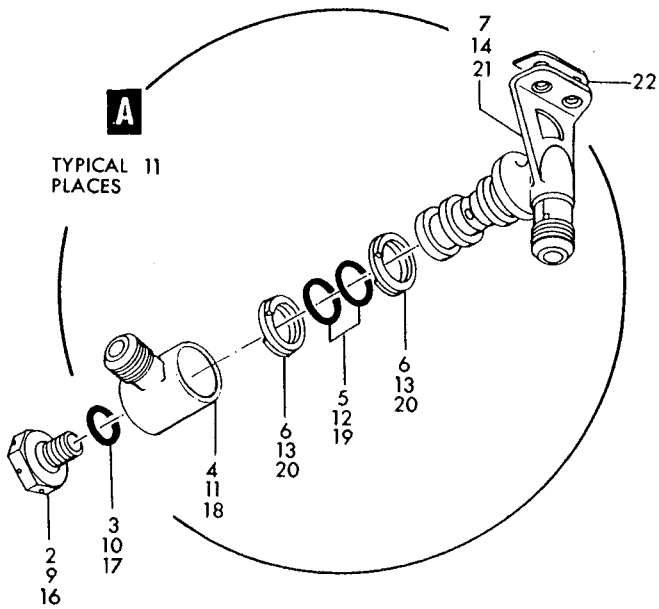

Figure 131— Hydraulic Panel Swivels and Piping

Figura e particolare	NDR	1 2 3 4 5 6 7 DENOMINAZIONE	Quant.	Codice applicab.
131-39	776435-93	TUBE ASSY, No. 2 system hydraulic pressure	1	
-40	775892-87	TUBE ASSY, dive flap down	1	
-41	776435-103	TUBE ASSY, air pressure gage	1	
-42	775892-91	TUBE ASSY, No. 2 system hydraulic return	1	
-43	776435-101	TUBE ASSY, No. 2 system hydraulic pressure	1	
-44	775892-95	TUBE ASSY, dive flap up	1	
-45	775892-107	TUBE ASSY, drain	1	
-46	775892-69	TUBE ASSY, No. 1 system hydraulic return	1	
-47	775892-57	TUBE ASSY, air pressure gage	1	
-48	653001-4-0070	HOSE ASSY, hydraulic pressure (00624)	1	
-49	775892-51	TUBE ASSY, air pressure gage	1	
-50	653001-4-0060	HOSE ASSY, air pressure gage (00624)	1	
-51	775892-49	TUBE ASSY, air pressure gage	1	
-52	775892-101	TUBE ASSY, No. 2 system hydraulic return	1	
-53	776435-95	TUBE ASSY, No. 2 system hydraulic pressure	1	
-54	776435-97	TUBE ASSY, No. 2 system hydraulic pressure	1	
-55	776435-99	TUBE ASSY, No. 2 system hydraulic pressure	1	
-56	775892-19	TUBE ASSY, No. 2 system return	1	
-57	775892-13	TUBE ASSY, No. 2 system hydraulic return	1	
-58	776435-91	TUBE ASSY, No. 2 system hydraulic pressure	1	
-59	775892-3	TUBE ASSY, No. 2 system hydraulic pressure	1	
-60	775892-103	TUBE ASSY, No. 2 system hydraulic return	1	
-61	775892-39	TUBE ASSY, No. 1 system hydraulic pressure	1	
-62	601002E0052	HOSE ASSY, drain (00624)	1	
-63	601002E0066	HOSE ASSY, No. 2 system hydraulic pressure (00624)	1	
-64	649001-4-0080	HOSE ASSY No. 2 system hydraulic pressure (00624)	1	
-65	775892-33	TUBE ASSY, No. 2 system hydraulic pressure	1	
-66	762564-48	TUBE ASSY, drain	1	
-67	775892-71	TUBE ASSY, No. 1 system hydraulic return	1	
-68	776435-87	TUBE ASSY, No. 1 system hydraulic pressure	1	
-69	775892-35	TUBE ASSY, No. 2 system hydraulic pressure	1	
-70	776435-85	TUBE ASSY, No. 1 system hydraulic pressure	1	
-71	649005F0100	HOSE ASSY, No. 1 system hydraulic pressure (00624)	1	
-72	775892-43	TUBE ASSY, No. 1 system hydraulic pressure	1	
-73	775892-55	TUBE ASSY, No. 1 system hydraulic pressure	1	
-74	768807-73	TUBE ASSY, drain	1	
-75	768807-75	TUBE ASSY, drain	1	
-76	776435-89	TUBE ASSY, No. 2 system hydraulic pressure	1	

Figura e particolare	NDR	DENOMINAZIONE 1 2 3 4 5 6 7	Quant.	Codice applicab.
		HYDRAULIC PANEL EQUIPMENT		
132	784016-103	. PLUMBING INSTL, hydraulic service door *(see fig. 129 for reqd)*	REF	6701-6815
	784016-109	. PLUMBING INSTL, hydraulic service door *(see fig. 129 for reqd)*	REF	6816-
- 1	AN919-1D	. . REDUCER (88044)	2	
- 2	MS21905D4	. . TEE (96906)	2	
- 3	K297-4	. . SHOCKMOUNT (51116)	2	
		Attaching Parts		
- 4	AN515-8R8	. . SCREW (88044)	4	
- 5	7633-37A5-1	. . TRANSMITTER, (TR4) hydraulic pressure (A1996) (02987) (Lockheed spec dwg 626123-5) (see T.O. 5P5-3-53-3)	2	
- 6	LS4634-4	. . GASKET, straight thread tube fitting (36659) (whn exh use NAS1596-4)	11	
	NAS1596-4	. . PACKING (80205) (use LS4634-4 until exh)	REF	
- 7	MS21902D4	. . UNION (96906)	5	
- 8	MS21909D4	. . TEE (96906)	1	
- 9	AN6289D4	. . NUT (88044)	5	
-10	LS4764-4	. . RING, hydraulic backup (36659)	5	
-11	157B	. . SWITCH, (S20) hydraulic pressure (A1620) (05087) (Lockheed spec dwg 668141-3) (13130-01 or 1801-3 is an alternate)	1	
	13130-01	. . SWITCH, (S20) hydraulic pressure (95766) (Lockheed spec dwg 668141-3) (157B or 1801-3 is an alternate)	REF	
	1801-3	. . SWITCH, (S20) hydraulic pressure (91812) (Lockheed spec dwg 668141-3) (alternate for 157B or 13130-01)	REF	
		Attaching Parts		
-12	AN520-10R26	. . SCREW (88044)	2	
-13	AN960D10	. . WASHER (88044)	2	
-14	MS21908D4	. . ELBOW (96906)	4	
-15	1011915-3-1	. . ACCUMULATOR, hydraulic (A1384) (77068) (Lockheed spec dwg 668043-5) (A303-50T1 in an alternate) (see T.O. 9H1-2-26-3)	2	
	A303-50T1	. . ACCUMULATOR, hydraulic (89307) (Lockheed spec dwg 668043-5) (alternate for 1011915-3-1) (see T.O. 9H1-2-20-3)	REF	
-16	320-62-325SH	. . CLAMP, loop band (98625)	2	
-17	901-325-1-4ASH	. . CLAMP, loop band lugs (98625)	1	
-18	901-325-1-10ASH	. . CLAMP, loop band lugs (98625)	1	
-19	ER834-080408	. . TEE, flareless reducing (79470)	1	
-20	AN6289D8	. . NUT (88044)	11	
-21	LS4764-8	. . RING, hydraulic backup (36659)	11	
-22	LS4634-8	. . GASKET, straight thread tube fitting (36659) (whn exh use NAS1596-8)	21	
	NAS1596-8	. . PACKING (80205) (use LS4634-8 until exh)	REF	
-23	AF47A1562	. . GASKET (81349)	4	
-24	AN6285-1	. . BODY (88044)	2	
-25	726460-3	. . BOLT, hydraulic panel air pressure gage	2	
-26	MS28889-1	. . VALVE (96906)	2	
-27	2R1442-3-30	. . VALVE, hydraulic restrictor (A2898) (91207) (Lockheed spec dwg 668066)	4	
	2RH441	. . . HOUSING, hydraulic restrictor valve (91207)	2	
	16-104	. . . FITTING, hydraulic restrictor valve (91207)	1	
	37092	. . . FILTER, hydraulic restrictor valve (81321)	2	
	LS4634-5	. . . GASKET, boss straight thread tube fitting (36659) (whn exh use NAS1596-5)	2	
	NAS1596-5	. . . PACKING (80205) (use LS4634-5 until exh)	REF	
	NP7	. . . NAMEPLATE, hydraulic restrictor valve (91207)	1	
-28	TA4C69S12T	. . CLAMP, loop (84971)	4	
		Attaching Parts		
	AN520-10R8	. . SCREW (88044)	1	
	MS21042L3	. . NUT (96906)	1	
-29	MS21911D4	. . TEE (96906)	1	
-30	EA1020-166-1	. . VALVE, hydraulic pressure regulating (62983) (Lockheed spec dwg 668439-1) (see T.O. 9H8-3-94-3)	1	

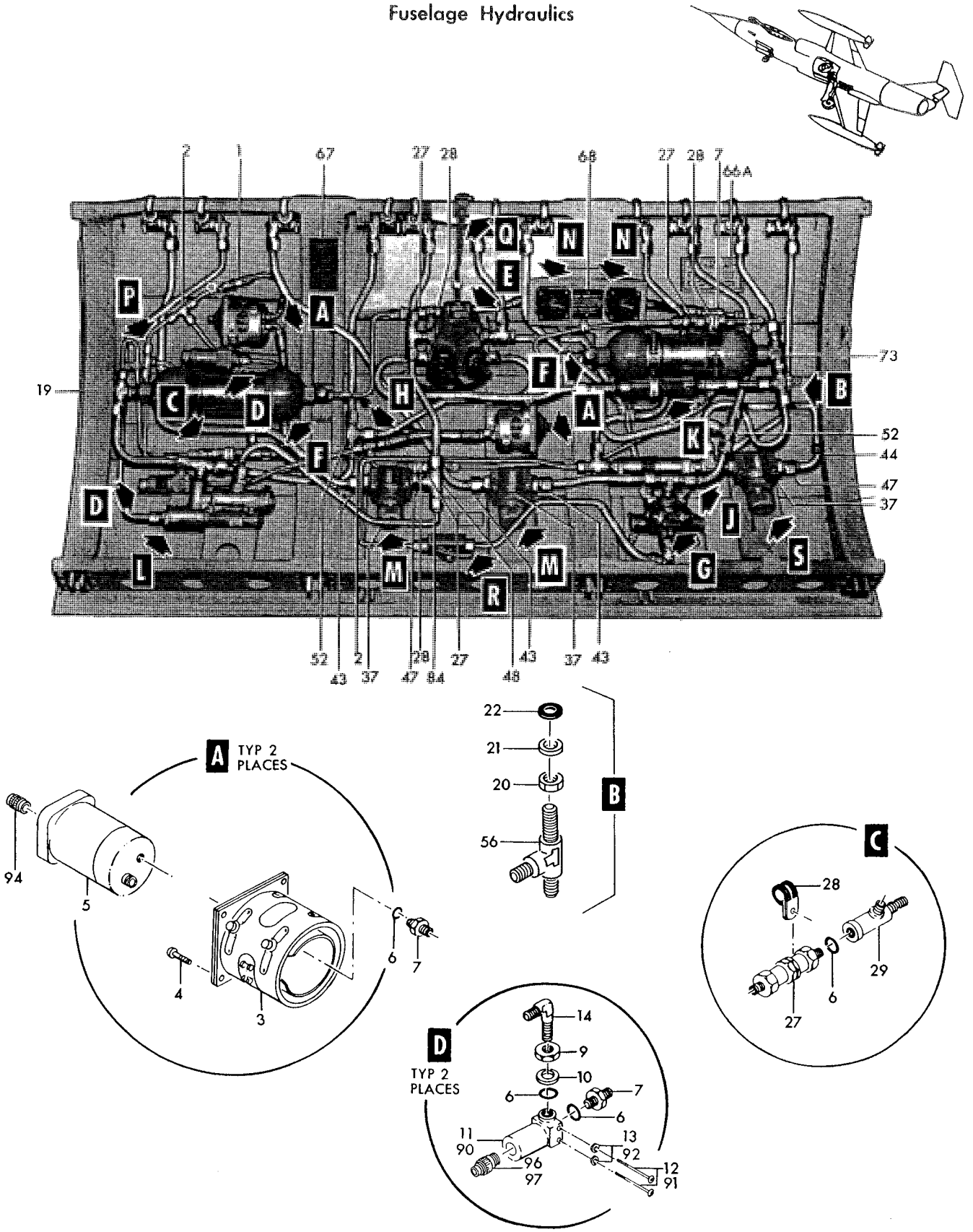

Figure 132— Hydraulic Panel Equipment (Sheet 1 of 3)

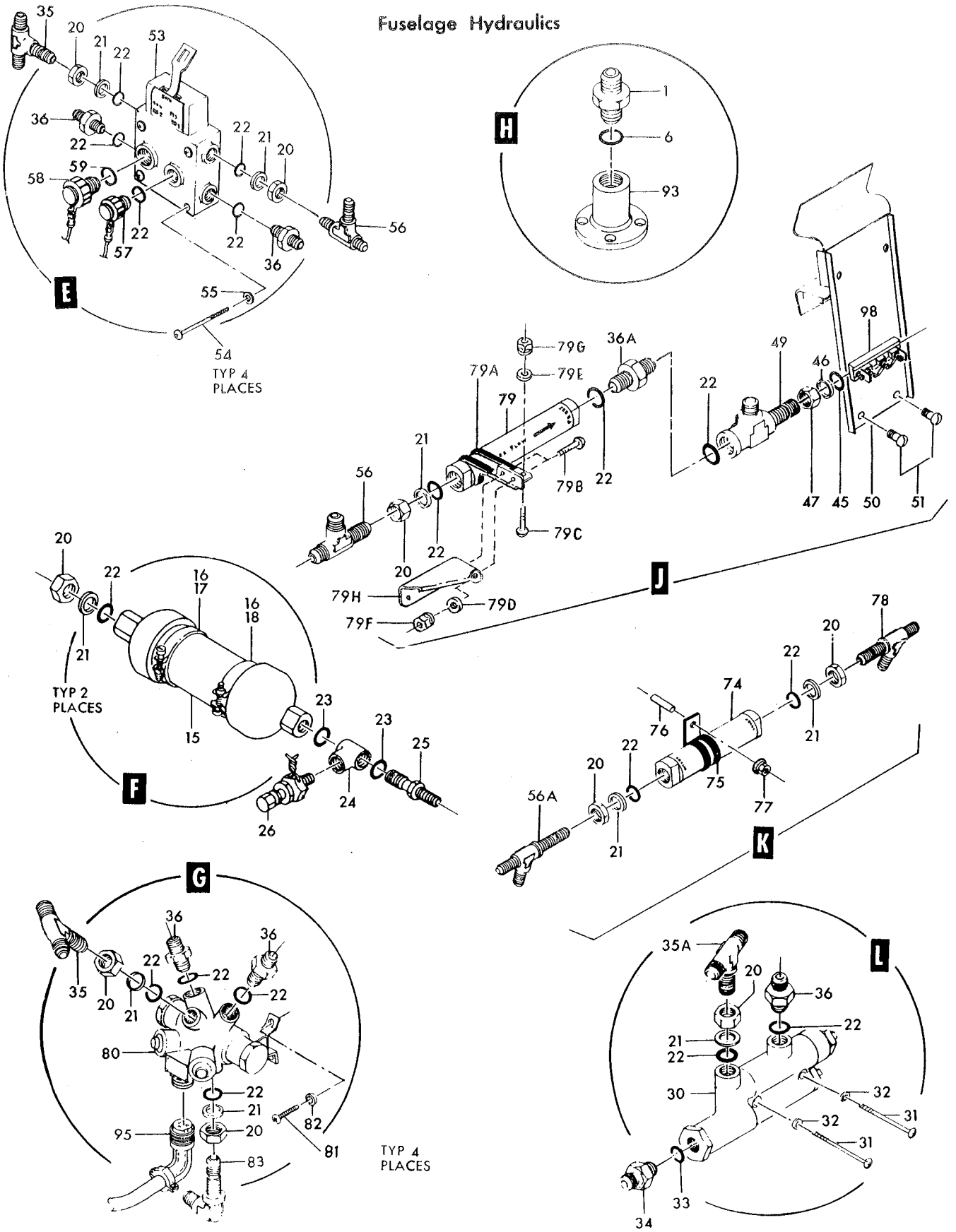

Figure 132— Hydraulic Panel Equipment (Sheet 2 of 3)

Fuselage Hydraulics

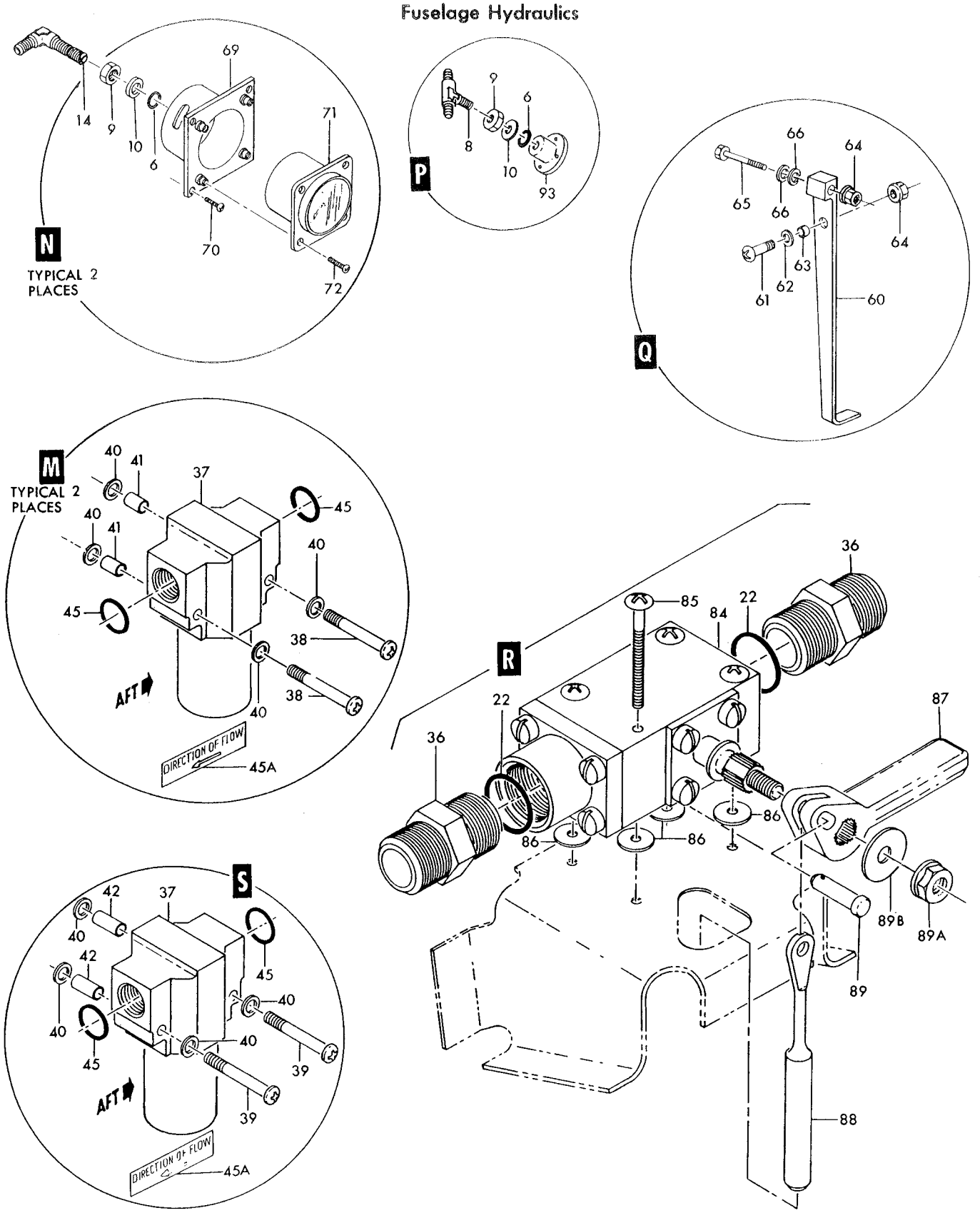

Figure 132— Hydraulic Panel Equipment (Sheet 3 of 3)

Figura e particolare	NDR	1	2	3	4	5	6	7	DENOMINAZIONE	Quant.	Codice applicab.
									Attaching Parts		
132-31	NAS623-3-22								SCREW (80205)	2	
-32	AN960D10								WASHER (88044)	2	
									*		
-33	LS4634-6								GASKET, straight thread tube fitting (36659) (whn exh use NAS1596-6)	1	
	NAS1596-6								PACKING (80205) (use LS4634-6 until exh)	REF	
-34	MS21902D6								UNION (96906)	1	
-35	MS21909D8								TEE (96906)	2	
-35A	MS21909-8								TEE (96906)	1	
-36	MS21902D8								UNION (96906)	7	
-36A	MS21902-8								UNION (96906)	1	
-37	AC1000-10								FILTER ASSY, hydraulic oil (A0303) (01414) (Lockheed spec dwg 668284-1) (61430 is an alternate) (see T.O. 9H3-3-44-3)	3	
	61430								FILTER ASSY, hydraulic oil (81321) (Lockheed spec dwg 668284-1) (alternate for AC1000-10) (see T.O. 9H3-3-73-3)	REF	
									Attaching Parts		
-38	NAS623-4-32								SCREW (80205)	2	
-39	NAS623-4-34								SCREW (80205)	2	
-40	AN960D416								WASHER (88044)	4	
-41	NAS43DD4-32								SPACER (80205)	2	
-42	NAS43DD4-36								SPACER (80205)	2	
									*		
-43	MS21916D10-8								REDUCER (96906)	3	
-44	ER833-1008								ELBOW (45681)	1	
-45	LS4634-10								GASKET, straight thread tube fitting (36659) (whn exh use NAS1596-10)	AR	
	NAS1596-10								PACKING (80205) (use LS4634-10 until exh)	REF	
-45A	771666-1								DECAL, direction of flow	3	
-46	LS4764-10								RING, hydraulic backup (36659)	AR	
-47	AN6289D10								NUT (88044)	3	
-48	ER834D080810								TEE, flareless reducing (79470)	1	
-49	ER784-100808								TEE, bulkhead reducing (79470)	1	
-50	767877-1								PAN, hydraulic panel filter drip	1	
									Attaching Parts		
-51	NAS623-3-1								SCREW (80205)		
	MS21042L3								NUT (96906)	2	
									*		
-52	MS21905D8								TEE (96906)		
-53	D50661-7								VALVE, hydraulic selector (A1384) (91379) (Lockheed spec dwg 668075-7) (see T.O. 9H8-14-155-33)	1	
									Attaching Parts		
-54	NAS623-3-22								SCREW (80205)	4	
-55	AN960D10								WASHER (88044)	4	
									*		
-56	MS21912-8								TEE (96906)	3	
-56A	MS21912D8								TEE (96906)	1	
-57	307733S11-8S								COUPLING, quick disconnect (00624) (Lockheed spec dwg 668069-3)	1	
-58	307733S11-12S								COUPLING, quick disconnect (00624) (Lockheed spec dwg 668069-4)	1	
-59	LS4634-12								GASKET, straight thread tube fitting (36659) (whn exh use NAS1596-12)	1	
	NAS1596-12								PACKING (80205) (use LS4634-12 until exh)	REF	
-60	767343-1								ARM, ground test selector valve positioning	1	
-61	NAS623-3-5								SCREW (80205)	1	
-62	AN960D10								WASHER (88044)	1	
-63	LS3859-3-6								BUSHING, plain (36659)	1	
-64	MS21042L3								NUT (96906)	2	
-65	727753-1								FOLLOWER, cam	1	
-66	AN960-10L								WASHER (88044)	AR	
-66A	FL0052								NAMEPLATE, caution (72395)	1	
-67	789863-1								NAMEPLATE, reservoir and system hydraulic fluid capacity	1	6701-6790; 6831-
	852791-101	C.							NAMEPLATE, reservoir and system hydraulic fluid capacity	1	6791-6830
-68	764080								NAMEPLATE, hydraulic accumulator instructions	1	
-69	K130								SHOCKMOUNT (51116)	2	

Figura e particolare	NDR	1 2 3 4 5 6 7 DENOMINAZIONE	Quant.	Codice applicab.
		Attaching Parts		
132-70	AN515-6R10	SCREW (88044)	4	
		*		
-71	KL60-000-48-2-7	GAGE, pressure (A1996) (D4278) (Lockheed spec dwg 626122-101) (see CR5-104-904-3)	2	
		Attaching Parts		
-72	AN515-6R6	SCREW (88044)	4	
		*		
-73	MS21911-8	TEE (96906)	1	
-74	EA50022-8	VALVE, hydraulic (62983) (Lockheed spec dwg 668435-1) (1206-5 is an alternate) (see T.O. 9H8-2-110-63)	1	
	1206-5	VALVE, hydraulic (06177) (Lockheed spec dwg 668435-1) (alternate for EA50022-8) (see T.O. 9H8-2-158-3)	REF	
-75	TA732S22T	CLAMP, loop (84971)	1	
-76	NAS43DD3-24	SPACER (80205)	1	
-77	MS21042L3	NUT (96906)	1	
-78	ER804-080804	TEE, bulkhead reducing (79470)	1	
-79	1008520-5	A. VALVE, hydraulic system priority (A1384) (77068) (Reworked and modified to 1008520-5-1 per AA.1F-104-OT-773) (Lockheed spec dwg 668051-11 (see T.O. 9H8-26-9-3)	1	6701-6815
	1008520-5-1	B. VALVE, hydraulic system priority (A1384) (77068) (Reworked from 1008520-5 per AA.1F-104-OT-773) (Lockheed spec dwg 668051-15) (see sep publ. whn avail.)	1	
		Attaching Parts		
-79A	747-22	CLAMP (83930)	1	
-79B	AN515-6R6	SCREW (88044)	2	
-79C	AN520-10R8	SCREW (88044)	1	
-79D	AN960-6	WASHER (88044)	2	
-79E	AN960-10L	WASHER (88044)	1	
-79F	MS21042L06	NUT (96906)	2	
-79G	MS21042L3	NUT (96906)	1	
-79H	851242-101	SUPPORT, hydraulic priority valve (NHA 767579-129)	1	
		*		
-80	13280-4	VALVE, (L13) hydraulic speed brake selector (A0359) (79294) (Lockheed spec dwg 668389-3) (see T.O. 9H8-14-250-3)	1	
		Attaching Parts		
-81	NAS623-4-3	SCREW (80205)	4	
-82	AN960D10	WASHER (88044)	4	
		*		
-83	MS21908-8	ELBOW (96906)	1	
-84	3-758-51-9	VALVE, hydraulic speed brake check (A0303) (82267) (Lockheed spec dwg 668391-3) (see T.O. 9H8-6-66-13)	1	
		Attaching Parts		
-85	NAS623-3-22	SCREW (80205)	4	
-86	AN960D10	WASHER (88044)	4	
		*		
-87	780499-1	HANDLE, speed brake shutoff valve	1	
-88	780502-1	BOLT, speed brake shutoff valve	1	
-89	MS20392-2C17	PIN (96906)	1	
-89A	MS21042L3	NUT (96906)	1	
-89B	AN960D10	WASHER (88044)	1	
-90	157C	SWITCH, (S21) autopilot hydraulic pressure (A1620) (05087) (Lockheed spec dwg 668434-1)	1	
		Attaching Parts		
-91	NAS1103-21	BOLT (80205)	2	
-92	AN960-10L	WASHER (88044)	2	
		*		
-93	764477	FITTING, 1/4 inch overboard drain *(see fig. 130 for reqd)*	REF	
	849541-101	HARNESS ASSY, main hydraulic pressure transmitter to bulkhead 310 *(see fig. 194 for reqd)*	REF	

Figura e particolare	NDR	1 2 3 4 5 6 7 DENOMINAZIONE	Quant.	Codice applicab.
132	849535-101	. HARNESS ASSY, emergency hydraulic pressure transmitter to bulkhead 310 *(see fig. 194 for reqd)*	REF	
-94	MS3106K14S2S	. . CONNECTOR, (P139) plug (hydraulic pressure transmitter) (96906) . .	2	
	MS3057-6A	. . ADAPTER (hydraulic pressure transmitter) (96906)	2	
	849544-101	. HARNESS ASSY, speed brake selector valve to P-46 disconnect *(see fig. 194 for reqd)*	REF	
-95	CA3108K10SL3S	. . CONNECTOR, (P111) plug (speed brake selector valve) (71468) . . .	1	
	MS3057-4A	. . ADAPTER (speed brake selector valve) (96906)	1	
	849540-101	. HARNESS ASSY, hydraulic pressure switch to P-45 disconnect *(see fig. 194 for reqd)*	REF	
-96	MS3106K12S3S	. . CONNECTOR, (P110) plug (hydraulic pressure switch) (96906) . . .	1	
	MS3057-4A	. . ADAPTER (hydraulic pressure switch) (96906)	1	
-97	MS3106K14S5S	. . CONNECTOR, (P138) plug (autopilot hydraulic pressure switch) (96906)	1	
	MS3057-6A	. . ADAPTER (autopilot hydraulic pressure switch) (96906)	1	
	799087-101	. HARNESS ASSY, diode assy (NHA 849545-101)	1	
-98	799086-101	. . DIODE ASSY, (CR6) terminal mounted	1	
	JAN1N540	. . . DIODE, (CR5) (03508)	2	
	799086-103	. . . TERMINAL STRIP ASSY, diode	1	

A - Removed per AA.1F-104-OT-773
B - Reqd per AA.1F-104-OT-773
C - Only per partial incorporation of SPU system

Figura e particolare	NDR	1 2 3 4 5 6 7 DENOMINAZIONE	Quant.	Codice applicab.
		PITOT AND STATIC PIPING AND EQUIPMENT FUSELAGE STATION 184 FORWARD		
133	850170-105	. PITOT INSTL, radar nose *(see fig. 33 for reqd)*	REF	6701-6815
	850170-119	. PITOT INSTL, radar nose *(see fig. 33 for reqd)*	REF	6816-
- 1	793353-5	C. . TUBE ASSY, (HR10) Pitot compensated (For spares replacement use 793353-101)	1	6701-6815
	793353-101	D. . TUBE ASSY, (HR10) Pitot compensated	1	
- 2	793354-3	. . . PITOT TUBE, compensated	1	
- 3	793355-101	. . . LUG, ground Pitot tube	1	
- 4	MS35234-61	C. . . SCREW (96906)	1	6701-6815
	MS51958-62	D. . . SCREW (96906)	1	
- 5	PNR10-32SM1LM	. . . NUT (83324)	1	
- 6	850-5	. . . FITTING (04274)	1	
- 7	850-6	. . . FITTING (04274)	1	
- 8	NAS514P1032-4	. . SCREW (80205)	3	
- 9	NAS514P1032-6	. . SCREW (80205)	3	
-10	785156-1	. . INSERT, type MA-1 Pitot tube	1	6701-6840
	785156-101	. . INSERT, type MA-1 Pitot tube	1	6841-
	850170-101	. RADOME INSTL, radar nose *(see fig. 33 for reqd)*	REF	6701-6740
	850170-109	. RADOME INSTL, radar nose *(see fig. 33 for reqd)*	REF	6741-6815
	850170-113	. RADOME INSTL, radar nose *(see fig. 33 for reqd)*	REF	6816-
-11	MS21919DG6	. . CLAMP (96906)	1	
-12	MS21919DG4	. . CLAMP (96906)	1	
		Attaching Parts		
-13	NAS623-3-14	. . SCREW (80205)	1	
-14	NAS43DD3-24	. . SPACER (80205)	1	
-15	MS21042L3	. . NUT (96906)	1	
		———— ✲ ————		
-16	MS21919DG6	. . CLAMP (96906)	1	
-17	MS21919DG4	. . CLAMP (96906)	1	
		Attaching Parts		
-18	NAS1203-10	. . SCREW (80205)	1	
-19	AN960D10	. . WASHER (88044)	1	
-20	MS21042L3	. . NUT (96906)	1	
		———— ✲ ————		
	850170-103	. . RADOME ASSY, radar nose complete *(see fig. 33 for reqd)*	REF	6701-6740
	850170-111	. . RADOME ASSY, radar nose complete *(see fig. 33 for reqd)*	REF	6741-6815
	850170-115	. . RADOME ASSY, radar nose complete *(see fig. 33 for reqd)*	REF	6816-
-21	785157-1	. . . INSERT, aft end Pitot mast	1	6701-6840
	785157-101	. . . INSERT, aft end Pitot mast	1	6841-
-22	52NTE202	. . . NUT, self-locking (72962)	1	
-23	AN960D2016	. . . WASHER (88044)	1	
	850805-111	. . . ANTENNA INSTL, radome tacan	1	6701-6140
	850805-101	. . . ANTENNA INSTL, radome tacan	1	6741-6815
	850805-107	. . . ANTENNA INSTL, radome tacan	1	6816-
-24	02RL1001-1	. . . . ANTENNA, (E139) type RL02 (A0019) (see sep. publ. whn avail) *(see fig. 158)*	1	
		Attaching Parts		
	NAS514P632-10	. . . . SCREW (80205)	6	
	AN960PD10L	. . . . WASHER (88044)	6	
	MS21042L3	. . . . NUT (96906)	6	
		———— ✲ ————		
-24A	850805-105	. . . . SHIM	4	
-24B	850170-107	. . . BOOM ASSY, Pitot	1	6701-6815
	850170-117	. . . BOOM ASSY, Pitot	1	6816-
-25	790782-1	. . . . SLEEVE, Pitot tube adapter	1	6701-6815
	852334-101	. . . . SLEEVE, Pitot tube adapter	1	6816-
		Attaching Parts		
-26	NAS514P832-6	. . . . SCREW (88044)	8	
		———— ✲ ————		
-27	790781-1	. . . . MAST ASSY, Pitot	1	
-28	850169-101	. . . RADOME ASSY, radar nose	1	6701-6740

Pitot and Static

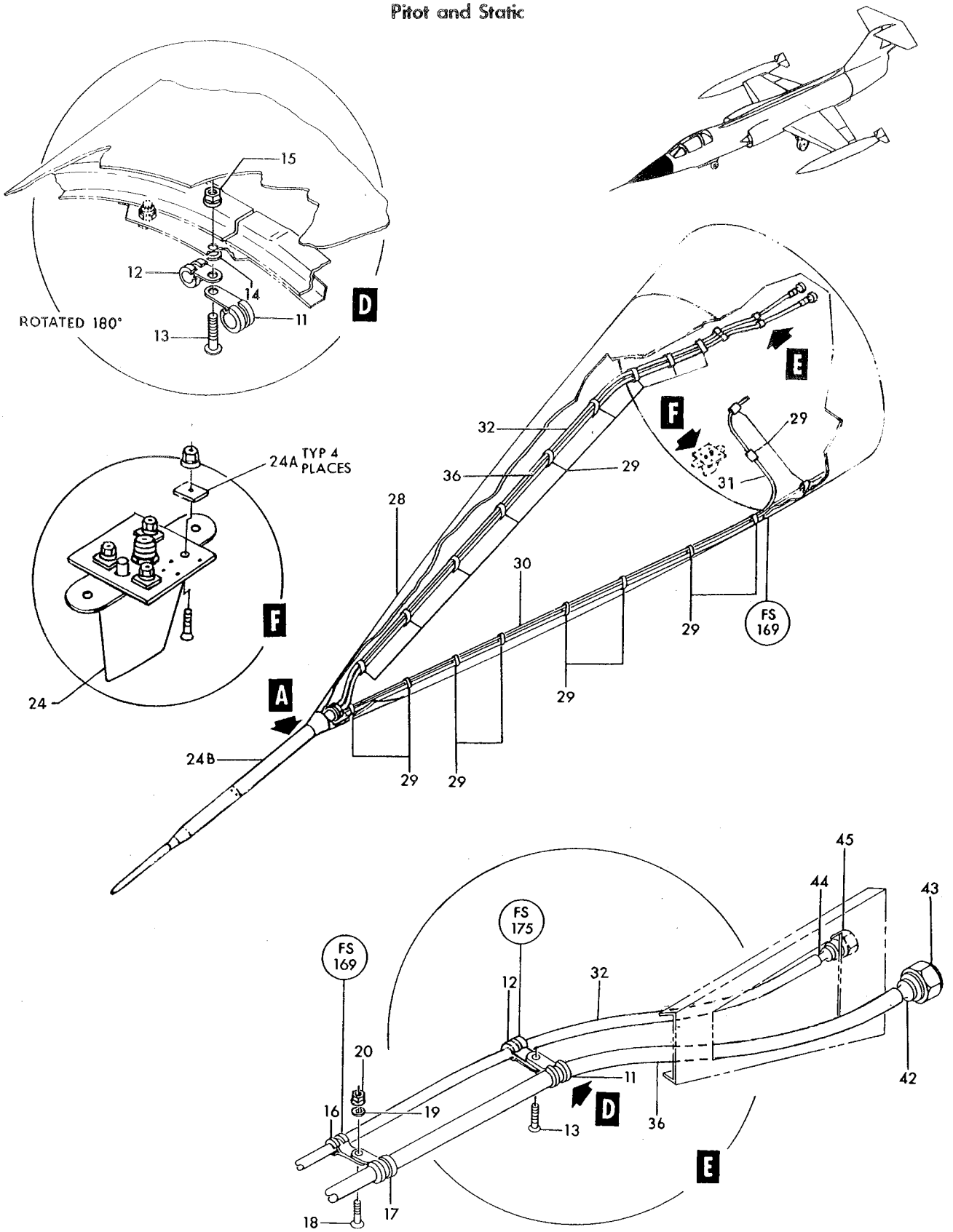

Figure 133—Pitot and Static Piping and Equipment Fuselage Station 184 Forward (Sheet 1 of 2)

Pitot and Static

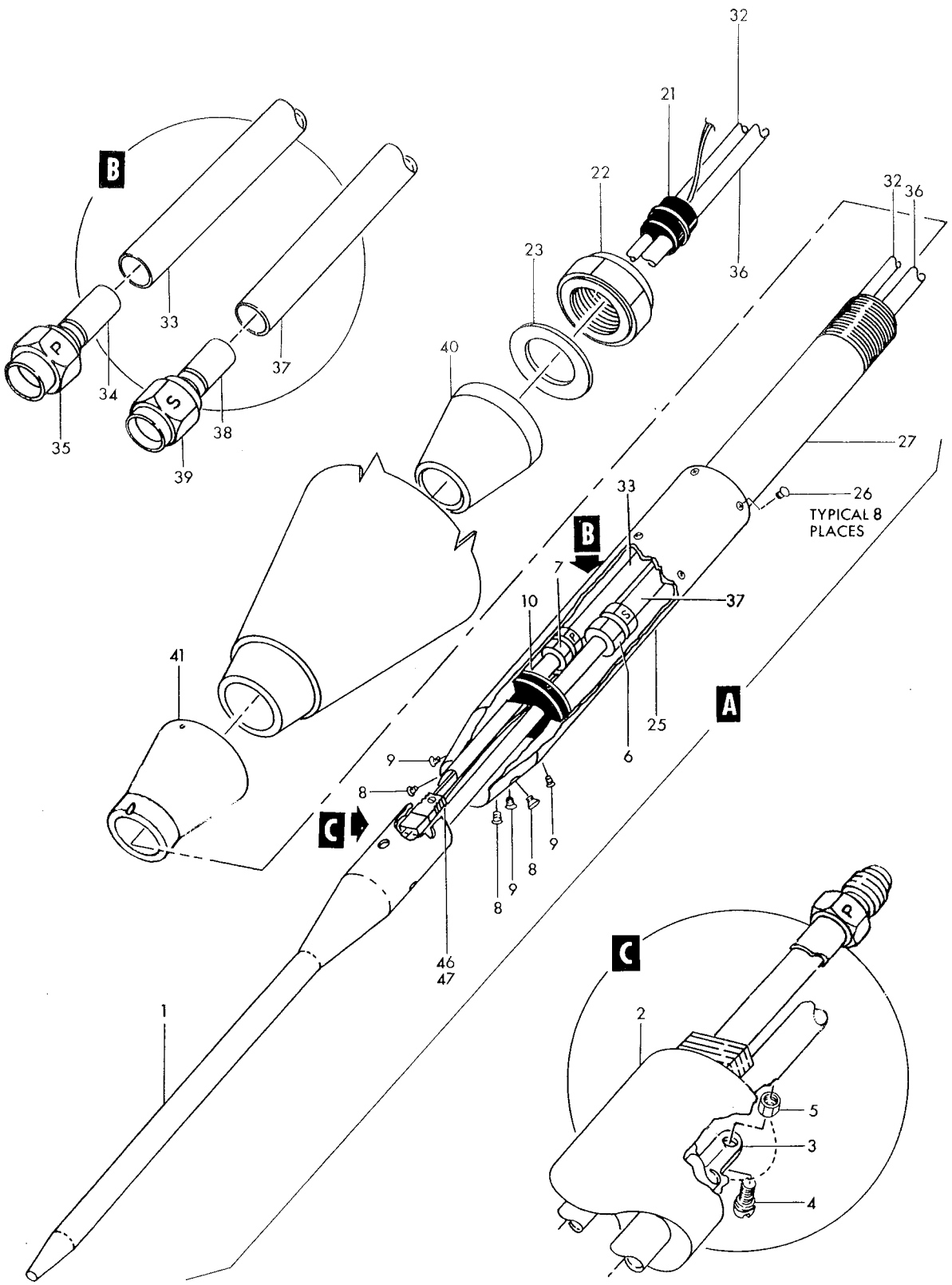

Figure 133—Pitot and Static Piping and Equipment Fuselage Station 184 Forward (Sheet 2 of 2)

Figura e particolare	NDR	1	2	3	4	5	6	7	DENOMINAZIONE	Quant.	Codice applicab.
133	850169-107	C.							RADOME ASSY, radar nose (Modified and reidentified to 850169-109 per AA.1F-104S-OT-166)	1	6741-6815
	850169-109	D.							RADOME ASSY, radar nose (Supersedes 850169-107 per AA.1F-104S-OT-166)	1	6816-
	850169-103								RADOME, radar nose	1	
-29	783367-1								CLIP, Pitot airspeed and Pitot static tubes	20	
	851083-101	C.							WIRE ASSY, static airspeed balance	1	6701-6815
-30	852234-101	D.							TUBE, radome lightning strike protection	1	
-31	850986-101								TUBE ASSY, dummy static airspeed balance	1	
-32	850987-101								TUBE ASSY, Pitot airspeed	1	
-33	850987-103								. TUBE, Pitot airspeed	1	
-34	850984-101								. SLEEVE, Pitot tube end	1	
-35	727261-3								. NUT, Pitot plumbing	1	
-36	850988-101								TUBE ASSY, static	1	
-37	850988-103								. TUBE, static	1	
-38	850985-101								. SLEEVE, static air speed tube	1	
-39	AN818-6D								. NUT (88044)	1	
-40	783366-1								BUSHING, Pitot mast mounting	1	
-41	783365-1	A.							RING, Pitot mast mounting	1	6701-6740
	783365-101	B.							RING, Pitot mast mounting	1	
-42	850984-101								SLEEVE, static air speed tube	1	
-43	AN818-6D								NUT (88044)	1	
-44	850985-101								SLEEVE, Pitot tube end	1	
-45	727261-3								NUT, Pitot plumbing	1	
	849745-101								HARNESS ASSY, nose section heater *(see fig. 158 for reqd)*	REF	6701-6815
	852355-101								HARNESS ASSY, nose section heater *(see fig. 158 for reqd)*	REF	6816-
-46	793353-3								CONNECTOR ASSY, (J195) Pitot tube compensated	1	
-47	850-27								CONNECTOR, (J195) electrical (04274)	1	

A - Removed per AA.1F-104-OT-650A
B - Reqd per AA.1F-104-OT-650A
C - Removed per AA.1F-104S-OT-169A
D - Reqd per AA.1F-104S-OT-169A

Figura e particolare	NDR	1 2 3 4 5 6 7 DENOMINAZIONE	Quant.	Codice applicab.
		PITOT AND STATIC PIPING AND EQUIPMENT FUSELAGE STATION 184 TO 206		
134	784265-7	PLUMBING INSTL, instrument *(see fig. 33 for reqd)*	REF	
-1	AN924-12D	NUT (88044)	2	
-2	561-40	BODY ASSY, static tube disconnect (91561) (Lockheed spec dwg 629280-5)	1	
-3	B559-30	BODY ASSY, Pitot tube disconnect (91561) (Lockheed spec dwg 629269-5)	1	
		Partial breakdown follows		
-4	29513-114	SEAL, body (91561)	2	
	784265-9	PLUMBING INSTL, windshield frame *(see fig. 202 for reqd)*	REF	
-5	AN924-6D	NUT (88044)	1	
-6	AN960D916	WASHER (88044)	1	
-7	561-41	NOSE PIECE ASSY, static tube disconnect (91561) (Lockheed spec dwg 629280-3) *(see fig. 135)*	1	
-8	AN924-4D	NUT (88044)	1	
-9	AN960D716	WASHER (88044)	1	
-10	B559-31	NOSE PIECE ASSY, Pitot tube disconnect (91561) (Lockheed spec dwg 629269-3)	1	
	850545-101	PLUMBING INSTL, Pitot static pressure (NHA 850168-101)	1	
-11	AN742D4	CLAMP (88044)	2	
-12	AN742D6	CLAMP (88044)	2	
		Attaching Parts		
-12A	NAS623-3-1	SCREW (80205)	1	
-13	NAS623-3-3	SCREW (80205)	1	
-14	MS21042L3	NUT (96906)	2	
		*		
-15	850301-135	TUBE ASSY, Pitot static	1	
-16	850301-131	TUBE ASSY, Pitot pressure	1	
-17	850679-101	BRACKET, speed switch	1	
-18	71035	SWITCH, (S170) dual, differential pressure (98505) (Lockheed spec dwg 671128-101) (see AA9-71035-4)	1	
		Attaching Parts		
-19	AN960-10L	WASHER (88044)	2	
-20	MS21042L3	NUT (96906)	2	
-21	AN837-6D	ELBOW (88044)	1	
-22	AN837-4D	ELBOW (88044)	1	
-23	AN924-6D	NUT (88044)	2	
-24	AN924-4D	NUT (88044)	2	
		*		
-25	MS28778-4	PACKING (96906)	1	
-26	MS28778-6	PACKING (96906)	1	
-27	AN832-6D	UNION (88044)	1	
-28	AN832-4D	UNION (88044)	1	
-29	AN833-6D	ELBOW (88044)	1	
-30	AN6270-6-6	HOSE ASSY (88044)	1	
-31	AN6270-4-7	HOSE ASSY (88044)	1	
-32	850301-139	TUBE ASSY, Pitot pressure	1	
-33	850301-141	TUBE ASSY, Pitot pressure	1	
-34	AN742D4	CLAMP (88044)	1	
-34A	TA102-2-6-6	BRACKET (84971)	1	
		Attaching Parts		
-35	NAS623-3-1	SCREW (80205)	1	
-36	MS21042L3	NUT (96906)	1	
		*		
-37	786410-93	TUBE ASSY, Pitot pressure	1	
-38	850301-137	TUBE ASSY, Pitot static	1	
-39	AN742D4	CLAMP (88044)	1	
-40	AN742D6	CLAMP (88044)	1	
		Attaching Parts		
-41	NAS623-3-12	SCREW (80205)	1	
-42	NAS43DD3-40	SPACER (80205)	1	

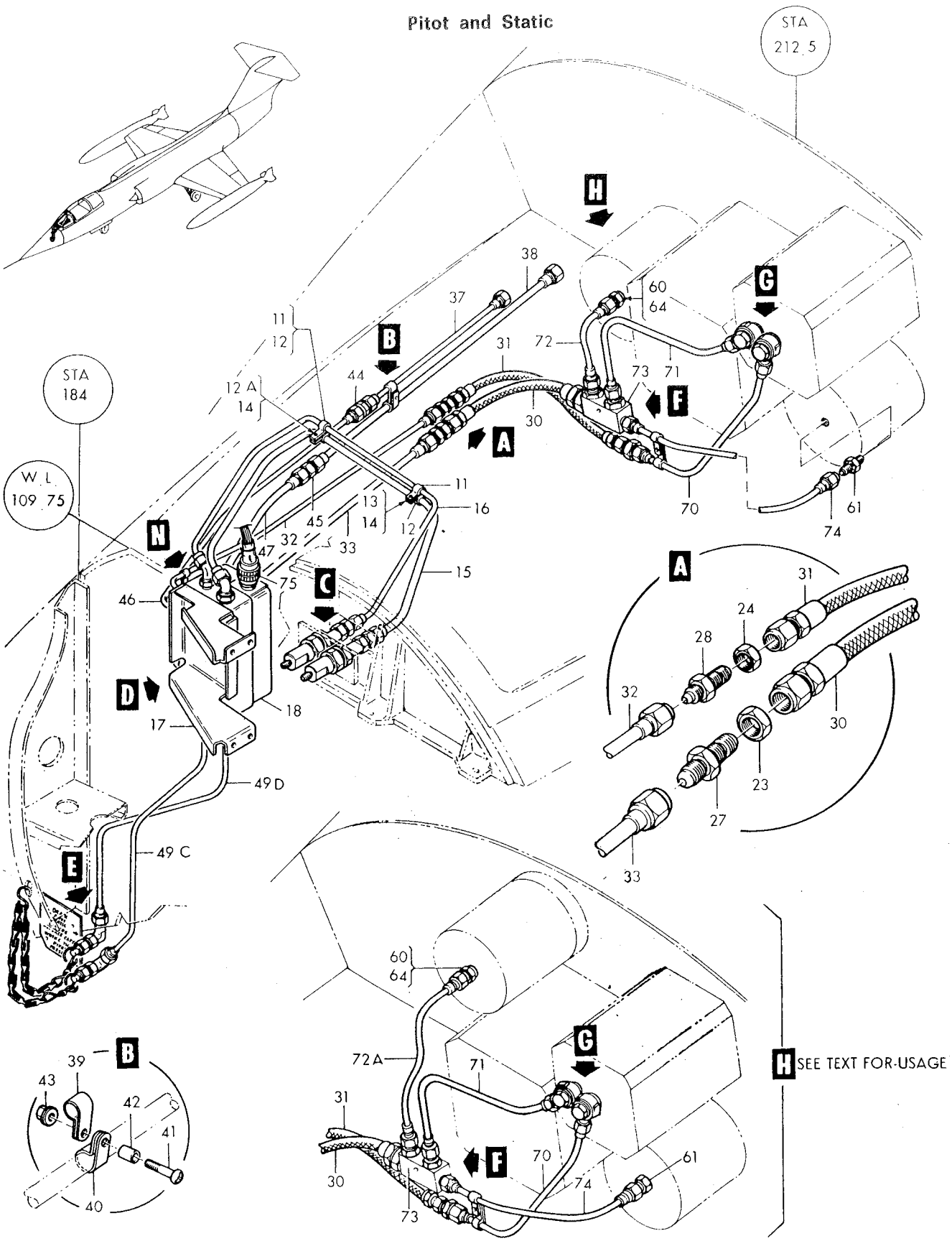

Figure 134-Pitot and Static Piping and Equipment Fuselage Station 184 to 206 use on code (Sheet 1 of 2)

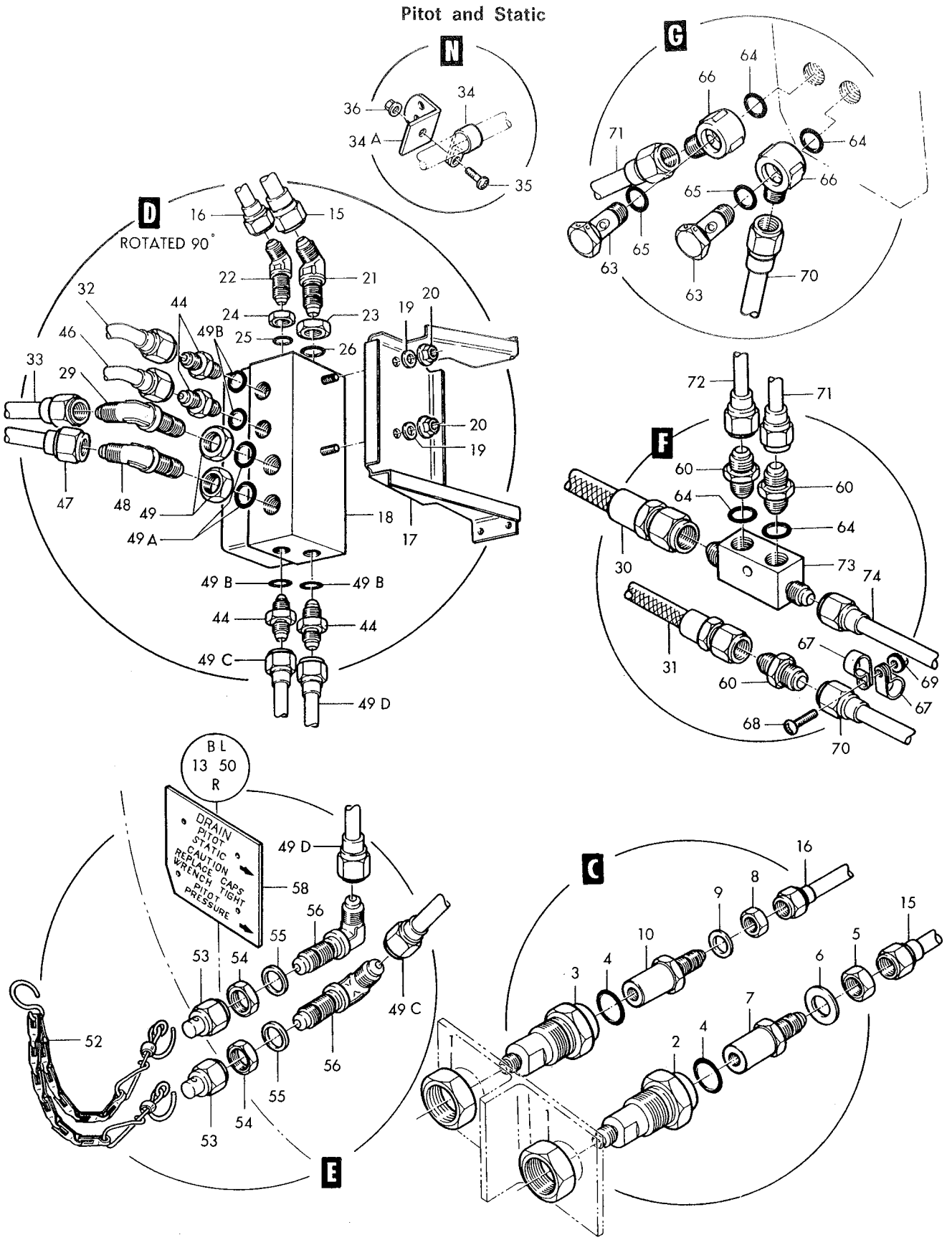

Figure 134–Pitot and Static Piping and Equipment Fuselage Station 184 to 206 (Sheet 2 of 2)

Figura e particolare	NDR	1 2 3 4 5 6 7 DENOMINAZIONE	Quant.	Codice applicab.
134-43	MS21042L8	NUT (96906)	1	
-44	AN815-4D	UNION (88044)	5	
-45	AN815-6D	UNION (88044)	1	
-46	850301-121	TUBE ASSY, Pitot pressure	1	
-47	850301-123	TUBE ASSY, Pitot static	1	
-48	AN837-6D	ELBOW (88044)	1	
-49	AN924-6D	NUT (88044)	2	
-49A	MS28778-6	PACKING (96906)	2	
-49B	MS28778-4	PACKING (96906)	4	
-49C	850301-125	TUBE ASSY, Pitot drain	1	
-49D	850301-127	TUBE ASSY, Pitot drain	1	
	793856-3	PLUMBING INSTL, instrument *(see fig. 30 for reqd)*	REF	
	762827	CAP ASSY, Pitot tube	1	
-52	726307-3	CHAIN ASSY, Pitot tube cap	1	
-53	726306-3	CAP ASSY, flared tube fitting pressure seal	2	
-54	AN924-4D	NUT (88044)	2	
-55	AN960D716	WASHER (88044)	2	
-56	AN833-4D	ELBOW (88044)	2	
-58	762869	NAMEPLATE, Pitot pressure Pitot static drain line	1	
	850201-101	PLUMBING INSTL, instrument *(see fig. 220 for reqd)*	REF	
-60	AN815-4D	UNION (88044)	4	
-61	AN816-4D	NIPPLE (88044)	1	
-63	NAS551-4D	BOLT, universal fitting (80205)	2	
-64	MS28778-4	PACKING (96906)	5	
-65	MS28775-011	PACKING (96906)	2	
-66	NAS552-4D	ELBOW, flared tube 45 degree (80205)	2	
-67	AN742D4	CLAMP (88044)	2	
		Attaching Parts		
-68	AN520-10R6	SCREW (88044)	1	
-69	MS21042L3	NUT (96906)	1	
-70	786410-101	TUBE ASSY, Pitot pressure	1	
-71	776527-93	TUBE ASSY, Pitot static	1*	
-72	776527-97	A. TUBE ASSY, Pitot static	1	6701-6815
-72A	776527-123	B. TUBE ASSY, Pitot static	1	
-73	726814-1	MANIFOLD, Pitot system	1	
-74	776527-95	TUBE ASSY, Pitot static	1	
	849687-101	HARNESS ASSY, annunciator panel and speed brake sensing sw to bhd disc *(see fig. 160 for reqd)*	REF	6701-6765
	852092-101	HARNESS ASSY, annunciator panel and speed brake sensing sw to bhd disc *(see fig. 160 for reqd)*	REF	6766-
-75	MS3116P10-10S	CONNECTOR, (p100) plug (speed sensing sw) (96906)	1	

A - Removed per AA.1F-104-OT-759B
B - Reqd per AA.1F-104-OT-759B
* - NOTE - Installed on the AWX aircrafts only - Except the AWX aircrafts M.M. 6816 thru 6820 since the radar-altimeter, it's already mounted

F – 104 S

NOMENCLATORE

PARTE

II

Figura e particolare	NDR	1 2 3 4 5 6 7 DENOMINAZIONE	Quant.	Codice applicab.
		PITOT EQUIPMENT FUSELAGE STATION 206 AFT		
135	789775-1	PLUMBING INSTL, cockpit Pitot (NHA 850168-101)	1	
-6	AN815-4D	UNION (88044)	1	
-7	786410-69	TUBE ASSY, Pitot pressure	1	
-8	AN742D4	CLAMP (88044)	5	
		Attaching Parts		
-9	NAS623-3-3	SCREW (80205)	1	
-10	NAS623-3-2	SCREW (80205)	2	
-11	NAS623-3-4	SCREW (80205)	1	
-12	NAS623-3-10	SCREW (80205)	1	
-13	LS607-4	SPACER, phenolic (36659)	1	
-14	LS607-16	SPACER, phenolic (36659)	1	
-15	MS21042L3	NUT (96906)	5	
		——————☼——————		
-16	AN815-6D	UNION (88044)	1	
-17	786410-67	TUBE ASSY, Pitot static	1	
-18	AN742D6	CLAMP (88044)	5	
		Attaching Parts		
-19	NAS623-3-2	SCREW (80205)	4	
-20	MS21042L3	NUT (96906)	4	
		——————☼——————		
	790927-101	PLUMBING INSTL, electronic compartment Pitot (NHA 850168-101)	1	
-21	AN837-6D	ELBOW (88044)	1	
-22	AN960D916	WASHER (88044)	1	
-23	AN924-6D	NUT (88044)	1	
-24	790063-71	TUBE ASSY, Pitot static	1	
-25	AN742D4	CLAMP (88044)	1	
-26	AN742D6	CLAMP (88044)	1	
		Attaching Parts		
	AN520-10R24	SCREW (88044)	1	
	AN960D10	WASHER (88044)	1	
	LS607-16	SPACER (36659)	2	
	MS21042L3	NUT (96906)	1	
		——————☼——————		
-27	AN832-6D	UNION (88044)	1	
-28	787864-3	BRACKET, Pitot tube center	1	
-29	AN960D916	WASHER (88044)	1	
-30	AN924-6D	NUT (88044)	1	
-31	AN6270-6-7 1-4	HOSE ASSY (Pitot static) (88044)	1	
-32	AN837-6D	ELBOW (88044)	1	
-33	787863-1	BRACKET, Pitot tube upper	1	
		Attaching Parts		
-34	NAS623-3-5	SCREW (80205)	2	
-35	MS21042L3	NUT (96906)	2	
		——————☼——————		
-36	AN960D916	WASHER (88044)	1	
-37	AN924-6D	NUT (88044)	1	
-38	786410-31	TUBE ASSY, Pitot static	1	
-39	AN837-4D	ELBOW (88044)	1	
-40	AN960D716	WASHER (88044)	1	
-41	AN924-4D	NUT (88044)	1	
-42	790063-69	TUBE ASSY, Pitot pressure	1	
-43	AN832-4D	UNION (88044)	1	
-44	787864-1	BRACKET, Pitot tube center	1	
-45	AN960D716	WASHER (88044)	1	
-46	AN924-4D	NUT (88044)	1	
-47	AN6270-4-6 3-4	HOSE ASSY (Pitot pressure) (88044)	1	
-48	AN837-4D	ELBOW (88044)	1	
-49	AN960D716	WASHER (88044)	1	
-50	AN924-4D	NUT (88044)	1	

Figura e particolare	NDR	DENOMINAZIONE 1 2 3 4 5 6 7	Quant.	Codice applicab.
		PITOT EQUIPMENT FUSELAGE STATION 206 AFT		
135	789775-1	PLUMBING INSTL, cockpit Pitot (NHA 850168-101)	1	
-6	AN815-4D	UNION (88044)	1	
-7	786410-69	TUBE ASSY, Pitot pressure	1	
-8	AN742D4	CLAMP (88044)	5	
		Attaching Parts		
-9	NAS623-3-3	SCREW (80205)	1	
-10	NAS623-3-2	SCREW (80205)	2	
-11	NAS623-3-4	SCREW (80205)	1	
-12	NAS623-3-10	SCREW (80205)	1	
-13	LS607-4	SPACER, phenolic (36659)	1	
-14	LS607-16	SPACER, phenolic (36659)	1	
-15	MS21042L3	NUT (96906)	5	
		——————☼——————		
-16	AN815-6D	UNION (88044)	1	
-17	786410-67	TUBE ASSY, Pitot static	1	
-18	AN742D6	CLAMP (88044)	5	
		Attaching Parts		
-19	NAS623-3-2	SCREW (80205)	4	
-20	MS21042L3	NUT (96906)	4	
		——————☼——————		
	790927-101	PLUMBING INSTL, electronic compartment Pitot (NHA 850168-101)	1	
-21	AN837-6D	ELBOW (88044)	1	
-22	AN960D916	WASHER (88044)	1	
-23	AN924-6D	NUT (88044)	1	
-24	790063-71	TUBE ASSY, Pitot static	1	
-25	AN742D4	CLAMP (88044)	1	
-26	AN742D6	CLAMP (88044)	1	
		Attaching Parts		
	AN520-10R24	SCREW (88044)	1	
	AN960D10	WASHER (88044)	1	
	LS607-16	SPACER (36659)	2	
	MS21042L3	NUT (96906)	1	
		——————☼——————		
-27	AN832-6D	UNION (88044)	1	
-28	787864-3	BRACKET, Pitot tube center	1	
-29	AN960D916	WASHER (88044)	1	
-30	AN924-6D	NUT (88044)	1	
-31	AN6270-6-7 1-4	HOSE ASSY (Pitot static) (88044)	1	
-32	AN837-6D	ELBOW (88044)	1	
-33	787863-1	BRACKET, Pitot tube upper	1	
		Attaching Parts		
-34	NAS623-3-5	SCREW (80205)	2	
-35	MS21042L3	NUT (96906)	2	
		——————☼——————		
-36	AN960D916	WASHER (88044)	1	
-37	AN924-6D	NUT (88044)	1	
-38	786410-31	TUBE ASSY, Pitot static	1	
-39	AN837-4D	ELBOW (88044)	1	
-40	AN960D716	WASHER (88044)	1	
-41	AN924-4D	NUT (88044)	1	
-42	790063-69	TUBE ASSY, Pitot pressure	1	
-43	AN832-4D	UNION (88044)	1	
-44	787864-1	BRACKET, Pitot tube center	1	
-45	AN960D716	WASHER (88044)	1	
-46	AN924-4D	NUT (88044)	1	
-47	AN6270-4-6 3-4	HOSE ASSY (Pitot pressure) (88044)	1	
-48	AN837-4D	ELBOW (88044)	1	
-49	AN960D716	WASHER (88044)	1	
-50	AN924-4D	NUT (88044)	1	

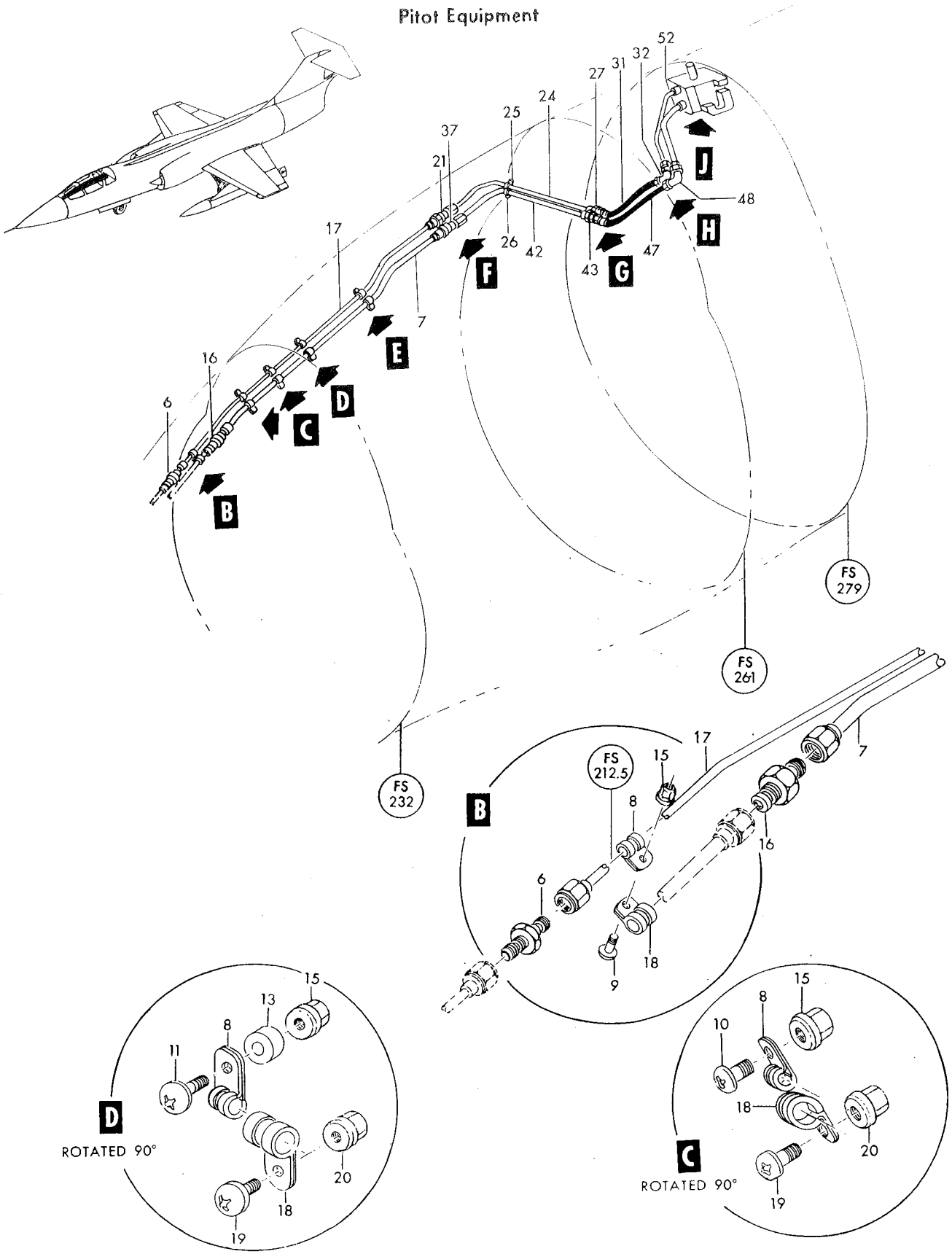

Figure 135—Pitot and Static Piping and Equipment Fuselage Station 206 Aft (Sheet 1 of 2)

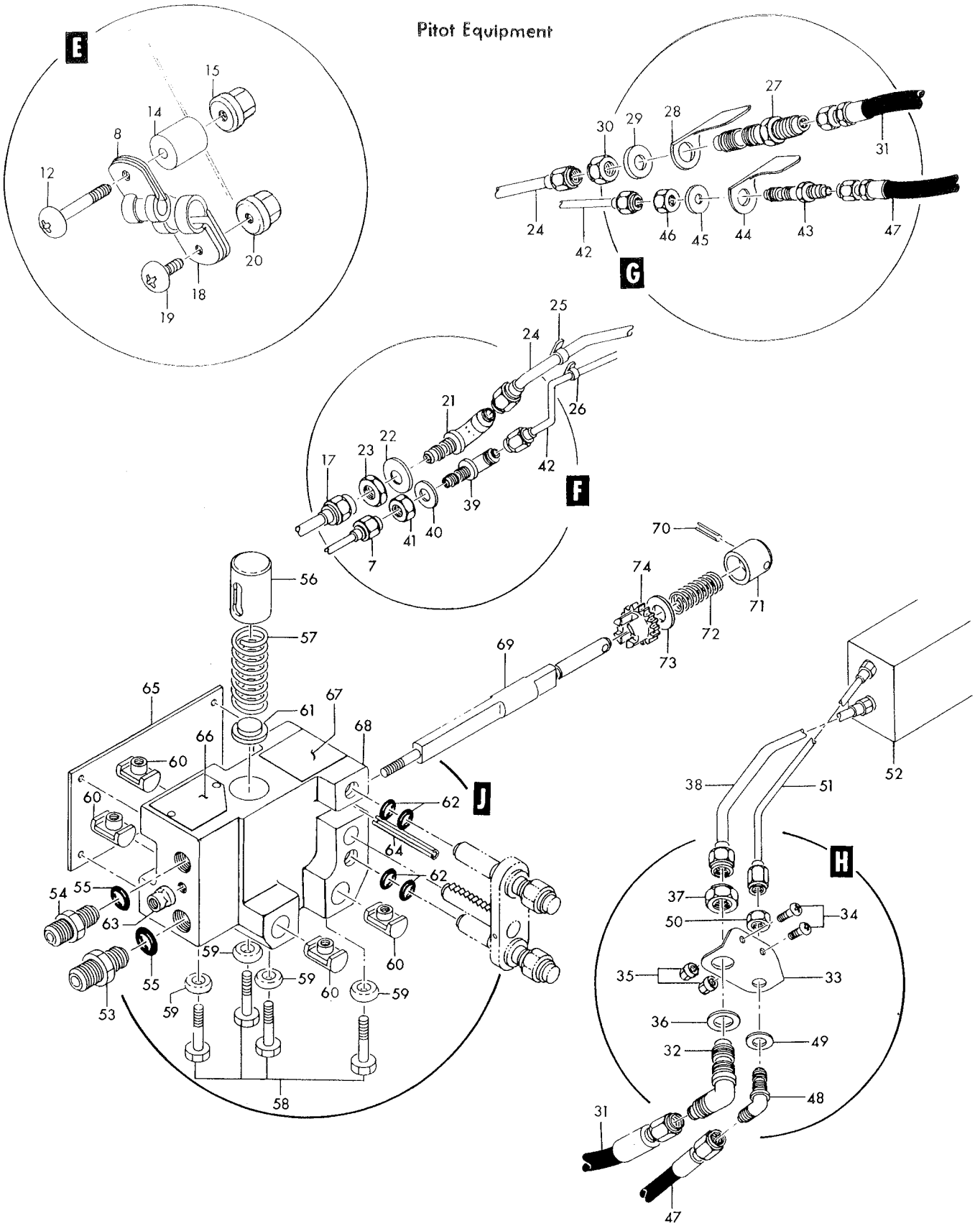

Figure 135—Pitot and Static Piping and Equipment Fuselage Station 206 Aft (Sheet 2 of 2)

Figura e particolare	NDR	1 2 3 4 5 6 7 DENOMINAZIONE	Quant.	Codice applicab.
135-51	786410-29	TUBE ASSY, Pitot pressure	1	
	788194-1	MANIFOLD INSTL, electronics rack Pitot system (NHA 850168-101)	1	
-52	788010-1	MANIFOLD ASSY, Pitot	1	
-53	AN919-6D	REDUCER (88044)	1	
-54	AN815-4D	UNION (88044)	1	
-55	AN6290-4	GASKET (88044)	2	
-56	788015-1	PLUNGER, disconnect	1	
-57	728467-1	SPRING, disconnect plunger	1	
-58	AN174H7A	BOLT (88044)	4	
-59	788016-1	WASHER, disconnect mounting	4	
-60	2752-048	NUT (72962)	4	
-61	789311-1	RETAINER, spring	1	
-62	MS28775-011	PACKING (96906)	4	
-63	MS21042L3	NUT (96906)	1	
-64	NAS561P3-16	PIN (80205)	1	
-65	790656-1	NAMEPLATE, manifold assembly	1	
-66	790657-1	NAMEPLATE, manifold assembly	1	
-67	794849-1	DECAL, pilot manifold warning	1	
-68	790564-1	MANIFOLD, Pitot system disconnect *(see fig. 261)*	1	
	788010-3	SHAFT ASSY, Pitot manifold	1	
-69	791857-1	SHAFT, disconnect pinion	1	
-70	NAS561P3-10	PIN (80205)	1	
-71	790565-1	KNOB, disconnect	1	
-72	728468-1	SPRING, shaft disconnect	1	
-73	NAS549L416	WASHER (80205)	1	
-74	791856-1	PINION, disconnect shaft	1	

Figura e particolare	NDR	DENOMINAZIONE 1 2 3 4 5 6 7	Quant.	Codice applicab.
		LIQUID OXYGEN PIPING AND EQUIPMENT		
136	784861-1	. PLUMBING INSTL, liquid oxygen (NHA 850168-101)	1	
- 1	790063-39	. . TUBE ASSY, oxygen vent	1	
- 2	790063-41	. . TUBE ASSY, oxygen gas	1	
- 3	774817-117	. . TUBE ASSY, oxygen vent	1	
- 4	774817-105	. . TUBE ASSY, oxygen vent	1	
- 5	774817-119	. . TUBE ASSY, oxygen build-up	1	
- 6	790063-37	. . TUBE ASSY, oxygen supply	1	
- 7	778105-1	. . TUBE ASSY, oxygen filler	1	
- 8	AN520-10R22	. . SCREW (88044)	1	
- 9	AN6290-8	. . GASKET (88044)	1	
-10	AN783D8	. . TEE (88044)	1	
-11	MS20822-5D	. . ELBOW (96906)	1	
-12	MS20822-8D	. . ELBOW (96906)	2	
-13	LS2805-6	. . WASHER, bulckhead fitting (36659)	1	
-14	AN919-11D	. . REDUCER (88044)	1	
-15	AN924-8D	. . NUT (88044)	1	
-16	NAS43DD3-16	. . SPACER (80205)	1	
-17	AN520-10R12	. . SCREW (88044)	1	
-18	LS607-32	. . SPACER, phenolic (36659)	1	
-19	MS21919DG5	. . CLAMP (96906)	2	
	784861-105	. BRACKET FACE INSTL, liquid oxygen (NHA 850168-101)	1	
-20	775166-101	. . BRACKET ASSY, liquid oxygen valve	1	
-21	775166-3	. . . BRACKET, liquid oxygen valve	1	
		Attaching Parts		
	NAS623-3-2	. . . SCREW (80205)	4	
-23	775067-1	. . . NAMEPLATE, liquid oxygen valve	1	
	775078-1	. . . CLIP, liquid oxygen valve bracket	1	
-24	FR2B3	. . VALVE, liquid oxygen pressure build up and vent (A1996) (99251) (Lockheed spec dwg 654160-5) (see T.O. 15X8-6-2-43)	1	
		Attaching Parts		
	NAS623-3-5	. . SCREW (80205)	4	
	AN960D10	. . WASHER (88044)	4	
	MS21042L3	. . NUT (96906)	4	
		*		
-25	AN515-6R6	. . SCREW (88044)	1	
	MS21042L06	. . NUT (96906)	1	
-26	FR11A2	. . VALVE, liquid oxygen filler (A1996) (99251) (Lockheed spec dwg 654161-3) (see T.O. 15X8-5-2-23)	1	
		Attaching Parts		
	NAS623-3-3	. . SCREW (80205)	4	
		*		
	775028-1	. VENT INSTL, liquid oxygen *(see fig. 30 for reqd)*	REF	
-27	727754-1	. . FITTING, liquid oxygen overboard vent	1	
	784862-1	. CONVERTER INSTL, liquid oxygen (NHA 849071-101)	1	
	784863-5	. . CONVERTER ASSY, liquid oxygen	1	
-28	767037-1	. . . STUD, liquid oxygen converter support	2	
-29	779261-1	. . . DECAL, liquid oxygen container single port cap warning	1	
-30	784863-3	. . . ANGLE, liquid oxygen converter	1	
-31	29061A4	. . . CONVERTER, (TR9) 5 liter liquid oxygen (A1996) (99251) (Lockheed spec dwg 654157-11) (see T.O. 15X2-6-4-23)	1	
-32	NAS623-4-4	. . . SCREW (80205)	2	
-33	AN960D416	. . . WASHER (88044)	4	
-34	MS21042L4	. . . NUT (96906)	4	
-35	AN960D416	. . WASHER (88044)	2	
-36	NAS623-4-4	. . SCREW (80205)	2	
-37	AN960D416	. . WASHER (88044)	2	
	784862-3	. SUPPORT INSTL, liquid oxygen *(see fig. 30 for reqd)*	REF	
-38	776091-3	. CLIP ASSY, liquid oxygen support	1	
-39	775280-1	. . SUPPORT ASSY, liquid oxygen converter outboard	1	

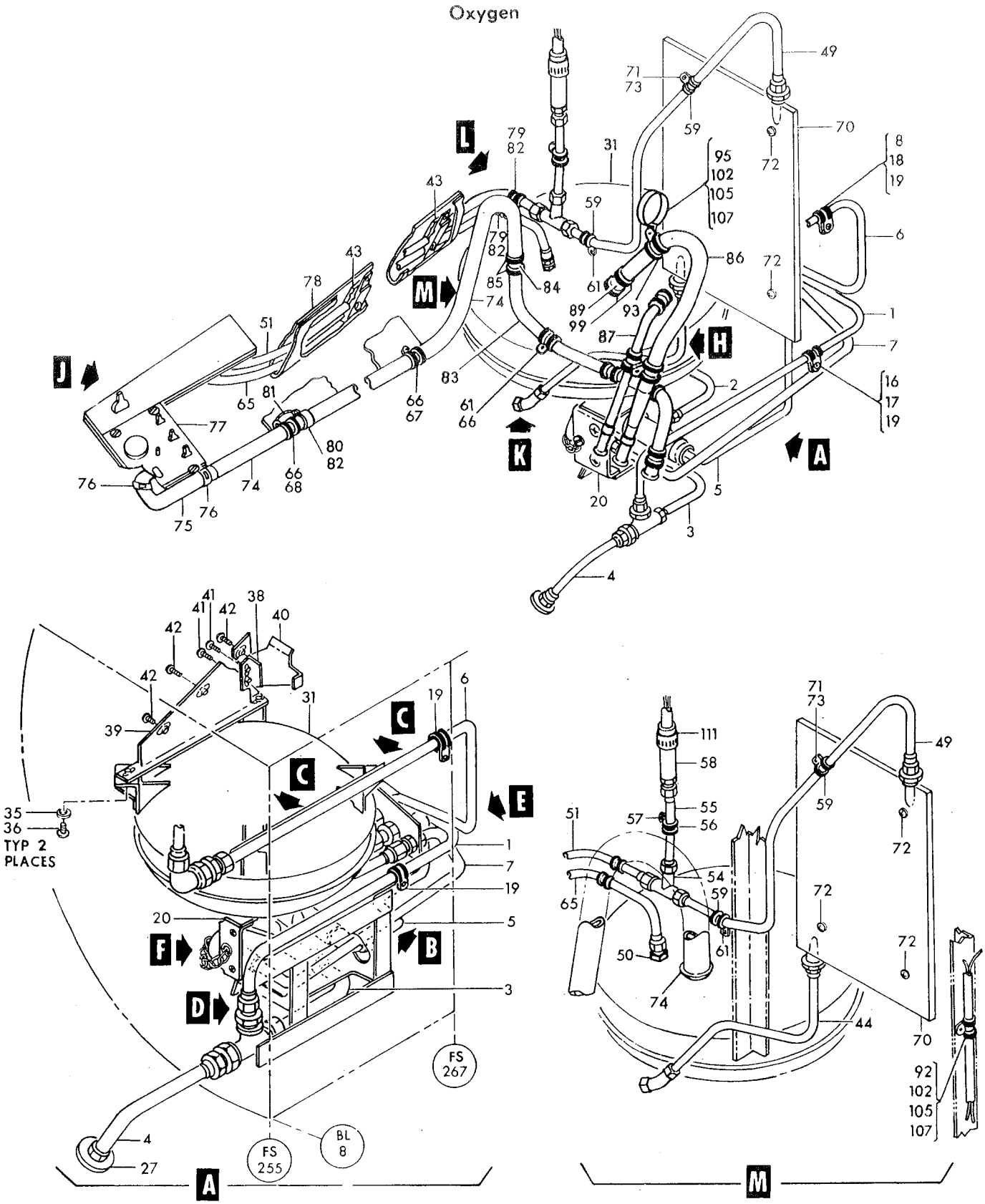

Figure 136—Liquid Oxygen Piping and Equipment (Sheet 1 of 3)

Oxygen

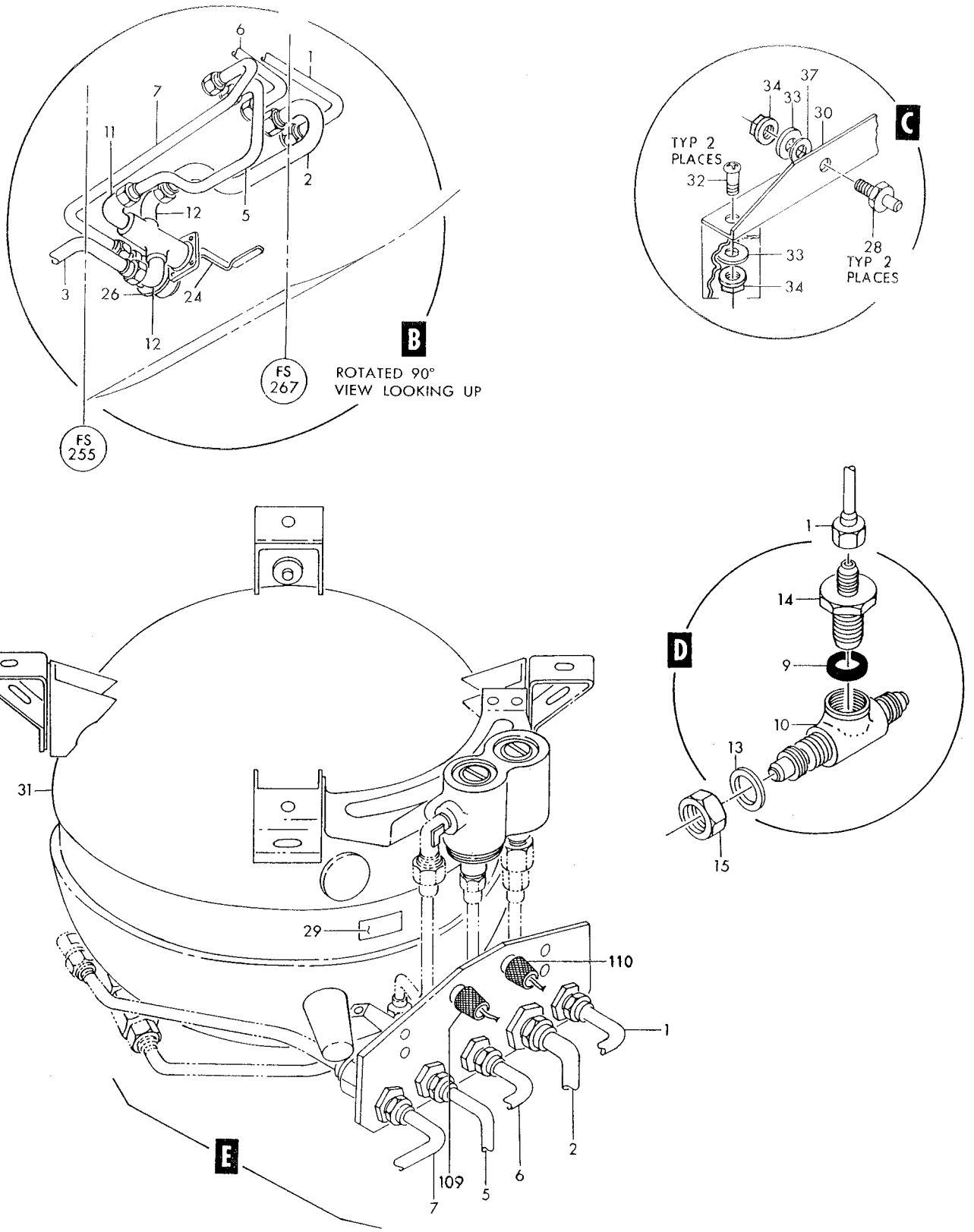

Figure 136—Liquid Oxygen Piping and Equipment (Sheet 2 of 3)

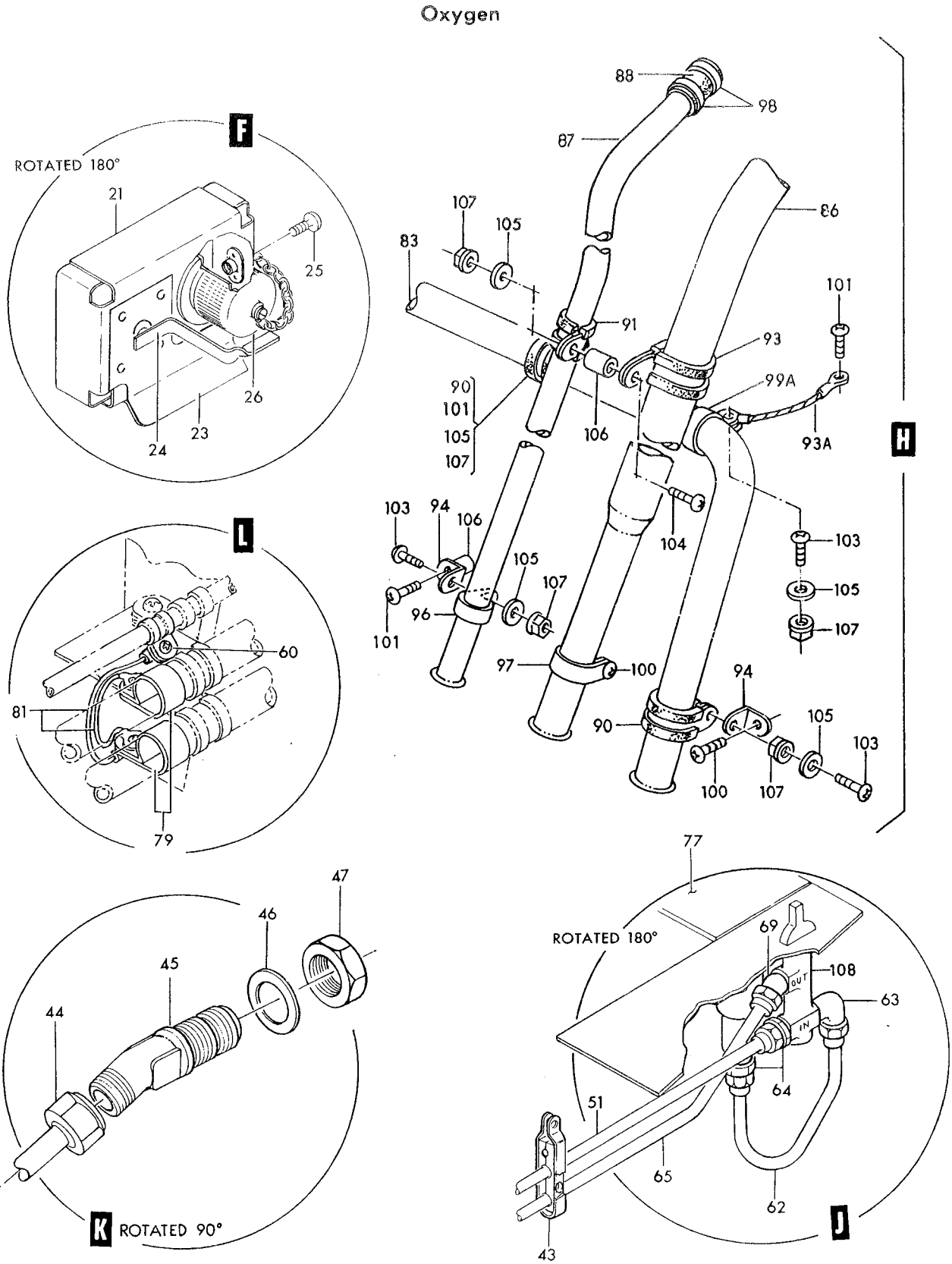

Figure 136—Liquid Oxygen Piping and Equipment (Sheet 3 of 3)

Figura e particolare	NDR	1	2	3	4	5	6	7	DENOMINAZIONE	Quant.	Codice applicab.
136-40	774912-1								GUSSET, liquid oxygen support	1	
-41	NAS623-3-2								SCREW (80205)	2	
-42	NAS517-3-3								SCREW (80205)	3	
	798671-101								PLUMBING INSTL, cockpit oxygen RH (NHA 850168-101)	1	6701-6765
	798671-103								PLUMBING INSTL, cockpit oxygen RH (NHA 850168-101)	1	6766-
-43	786409-1								CLAMPBLOCK, oxygen plumbing	2	
	AN520-10R6								SCREW (88044)	2	
	AN507-1032R8								SCREW (88044)	2	
	52-1650-02								NUT (72962)	2	
-44	786410-1								TUBE ASSY, oxygen supply	1	
-45	AN837-5D								ELBOW (88044)	1	
-46	AN960D816								WASHER (88044)	1	
-47	AN924-5D								NUT (88044)	1	
-49	796175-105								TUBE ASSY, oxygen supply	1	
-50	AN806D5								PLUG, machine thread (88044)	1	
-51	796175-103								TUBE ASSY, oxygen supply	1	
-54	AN834-5D								TEE (88044)	1	
-55	796175-107								TUBE ASSY, oxygen supply	1	
-56	MS21919DG5								CLAMP (96906)	1	
	LS607-22								SPACER (36659)	1	
-57	NAS603-20P	A.							SCREW (80205)	1	
-58	C277-1100-2								SWITCH, (S144) oxygen low pressure (03088) (Lockheed spec dwg 740156-101)	1	
-59	MS21919DG5								CLAMP (96906)	2	
-60	AN520-10R12								SCREW (88044)	1	
-61	AN520-10R8								SCREW (88044)	2	
	AN960D10								WASHER (88044)	8	
	MS21042L3								NUT (96906)	12	
-62	786410-9								TUBE ASSY, oxygen supply	1	
-63	MS20822-5D								ELBOW (96906)	1	
-64	AN816-5D								NIPPLE (88044)	2	
-65	790063-59								TUBE ASSY, anti-g valve inlet high pressure	1	
-66	MS21919DG14								CLAMP (96906)	3	
-67	AN520-10R14								SCREW (88044)	1	
-68	AN520-10R10								SCREW (88044)	1	
	NAS43DD3-16								SPACER (80205)	1	
	AN960D10								WASHER (88044)	1	
	MS21042L3								NUT (96906)	2	
-69	AN823-5D								ELBOW (88044)	1	
-70	4590-201								PLATE, heat exchanger liquid oxygen evaporative (01484) (Lockheed spec dwg 654171-1)	1	
									Attaching Parts		
-71	AN520-10R14								SCREW (88044)	1	
-72	AN520-10R8								SCREW (88044)	3	
-73	NAS43DD3-24								SPACER (80205)	1	
-74	FL0243-000								TUBE ASSY, low pressure oxygen sypply - I DASH (A0019)	1	
-75	751351-1								ELBOW, connector	1	
-76	NAS397-18								CLAMP (80205)	2	
-77	2894-10CB10								REGULATOR, (E87) pressure breathing oxygen diluter demand (A1996) (99251) (Lockheed spec dwg 654159-11) (see T.O. 15X6-3-6-4) *(see fig. 163)*	1	
	LS9030-327								LAMP (36659)	1	
	VM16-2	B.							INSULATOR (71468) (Intchg wth TSE-16-01)	1	
	TSE-16-01	B.							INSULATOR (11139) (Intchg wth VM16-2)	REF	
	031-9206-016	B.							CONTACT (71468)	1	
	030-9205-018	B.							CONTACT (71468)	1	
	VM16G	B.							GROMMET (71468)	2	
-78	786428-1								COVER, oxygen plumbing	1	
									Attaching Parts		
	AN515-8R6								SCREW (88044)	9	
	MS21042L08								NUT (96906)	9	

Figura e particolare	NDR	DENOMINAZIONE	Quant.	Codice applicab.
136-79	AN735D5	CLAMP (88044)	2	
-80	AN735D14	CLAMP (88044)	1	
-81	MS25083-1BB3	JUMPER (96906)	3	
-82	AN520-10R8	SCREW (88044)	3	
-83	FL0244-000	TUBE ASSY, low pressure oxygen supply - II dash (A0019)	1	
-84	FL0250-000	SLEEVE, low pressure (A0019)	1	
-85	NAS397-18	CLAMP (80205)	2	
-86	FL0245-000	TUBE ASSY, anti « G » suit pressure (A0019)	1	
-87	FL0246-000	TUBE ASSY, anti « G » (A0019)	1	
-88	BAS160-1-5-10-12	SLEEVE (U1901)	1	
-89	BAS160-1-5-16-12	SLEEVE (U1901)	1	
-90	MS21919DG14	CLAMP (96906)	2	
-91	MS21919DG10	CLAMP (96906)	1	
-92	MS21919DG7	CLAMP (96906)	1	
-93	MS21919DG16	CLAMP (96906)	2	
-93A	MS25083-1BB3	JUMPER (96906)	1	
-94	AN743B12	BRACKET (88044)	2	
-95	AN735D48	CLAMP (88044)	1	
-96	AN742D10	CLAMP (88044)	1	
-97	AN742D14	CLAMP (88044)	1	
-98	AN737TW30	CLAMP (88044)	2	
-99	AN737TW44	CLAMP (88044)	2	
-99A	AN735D14	CLAMP (88044)	1	
-100	NAS623-3-3	SCREW (80205)	2	
-101	NAS623-3-7	SCREW (80205)	3	
-102	AN520-10R10	SCREW (88044)	2	
-103	AN520-10R8	SCREW (88044)	3	
-104	AN520-10R12	SCREW (88044)	1	
-105	AN960D10	WASHER (88044)	7	
-106	LS607-7	SPACER (36659)	2	
-107	MS21042L3	NUT (96906)	7	
-108	FR61A1	VALVE, press suit oxygen supply control (A1996) (99251) (Lockheed spec dwg 654224-1) (see T.O. 15X8-7-18-3) *(see fig. 169 for reqd)*	REF	
	852137-101	HARNESS ASSY, P-27 disc. to AC load center *(see fig. 174 for reqd)*	REF	
-109	1-697-1	CONNECTOR, (P93) plug (liquid oxygen tank) (95712)	1	
-110	1-670-1	CONNECTOR, (P92) plug (liquid oxygen tank) (95712)	1	
	849694-101	HARNESS ASSY, heat and temperature control panel to bhd disc *(see fig. 160 for reqd)*	REF	
-111	CT06E10SL4S	CONNECTOR, (P394) plug (low press oxygen sw) (71468)	1	

A - Reqd per AA.1F-104S-OT-116
B - Reqd per AA.1F-104-OT-689

Figura e particolare	NDR	1 2 3 4 5 6 7 DENOMINAZIONE	Quant.	Codice applicab.
		RADAR COOLING		
137	784866-1	. COOLING SYSTEM INSTL, regulator *(see fig. 30 for reqd)*	REF	
-1	784866-3	. . REGULATOR ASSY, cooling system	1	
		Attaching Parts		
-2	AN960D416	. . WASHER (88044)	4	
-3	MS21042L4	. . NUT (96906)	4	
-4	102294-2-1	. . . REGULATOR, (B4) air pressure (complete with fan) (A0076) (70210) (Lockheed spec dwg 644565-11) (alternate for 102294-1) (see T.O. 15A1-4-13-4)	1	
	102294-1	. . . REGULATOR, (B4) air pressure (complete with fan) (70210) (Lockheed spec dwg 644565-11) (102294-2-1 is an alternate) (see T.O. 15A1-4-13-4)	REF	
-5	LS3850-4-4	. . . SHIELD ASSY, cabin pressure regulator terminals (36659)	1	
-6	781704-53	. . . TUBE ASSY, air pressure *(see fig. 145)*	1	
-7	AN815-4D	. . . UNION (88044) *(see fig. 145)*	1	
-8	764534	. . DECAL, high voltage warning	1	
-9	787158-1	. . DECAL, radar blower wiring	1	
-10	766105-1	. . BRACKET, cabin pressure regulator	1	
		Attaching Parts		
-11	NAS1104-4	. . BOLT (80205)	2	
-12	AN960D416	. . WASHER (88044)	2	
-13	AN960D10	. . WASHER (88044)	2	
-14	MS21042L3	. . NUT (96906)	2	
-15	761635	. . GASKET, radar cooling regulator	1	
	784890-3	. DUCT INSTL, cabin discharge air (NHA 849071-101)	1	
-16	510108-10	. . PICKUP, (E32) cabin temperature (A0076) (70210) (Lockheed spec dwg 644881-5) (see T.O. 15A5-6-12-2)	2	
-17	AN6290-3	. . GASKET (88044)	2	
-18	785815-1	. . DUCT ASSY, nasarr cooling air flexible	1	
		Attaching Parts		
-19	AN960D416	. . WASHER (88044)	3	
-20	MS21042L4	. . NUT (96906)	3	
-21	320-62-412SH	. . CLAMP (98625)	1	
-22	AN815-2D	. . UNION (88044)	1	
-23	AN6270-2-20	. . HOSE (88044)	1	
	784890-1	. VALVE INSTL, cabin discharge air relief *(see fig. 157 for reqd)*	REF	6701-6565
	784890-101	. VALVE INSTL, cabin discharge air relief *(see fig. 157 for reqd)*	REF	6766-
-24	AN502-10-12	. . SCREW (88044)	4	
-25	AN6290-2	. . GASKET (88044)	1	
-26	785110-7	. . VALVE ASSY, nasarr cooling air bypass (see T.O. 15A2-13-21-3)	1	
-27	MS25083-1BC4	. . JUMPER (96906)	1	
-28	MS25083-3BB6	A. . JUMPER (96906)	1	6701-6765
	FL0438-109	B. . JUMPER ASSY (A0019)	1	
	785961-1	. HARNESS ASSY, fwd bulkhead 184 to P-69 disconnect *(see fig. 157 for reqd)*	REF	
-29	CA3106ER10SL3S	. . CONNECTOR, (P5) plug (cabin temperature pickup and limiter reset sensor) (71468)	2	

A - Removed per AA.1F-104-OT-745A
B - Reqd per AA.1F-104-OT-745A

Air Conditioning and Pressurization

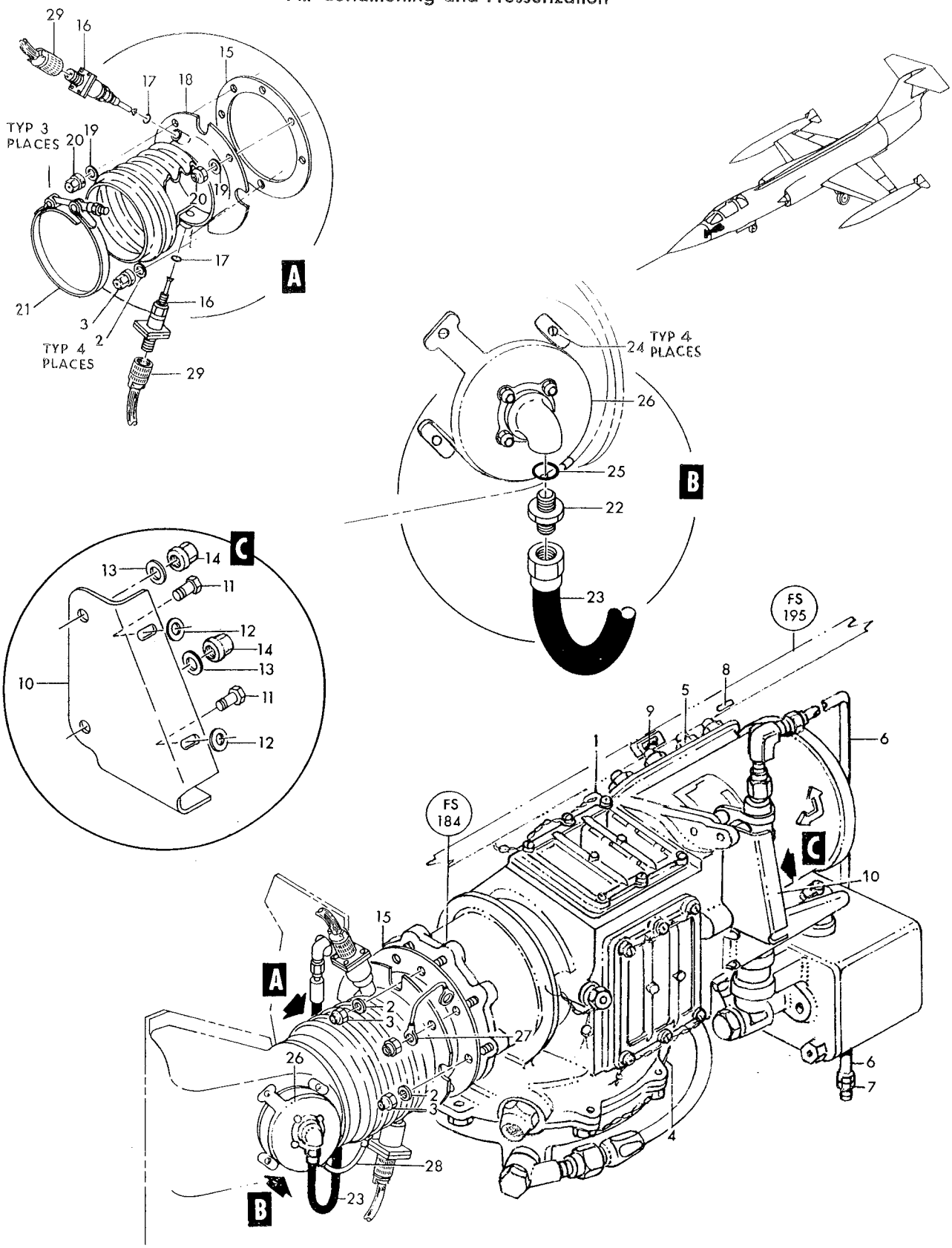

Figure 137— Radar Cooling

Figura e particolare	NDR	1 2 3 4 5 6 7 DENOMINAZIONE	Quant.	Codice applicab.
138		RADAR PRESSURIZATION AND PIPING		
- 1	768711-1	. DUCT ASSY, fus sta 200 to 206 rain removal *(see fig. 149 for reqd)* . .	REF	
	784890-5	. ELBOW INSTL, cabin discharge air *(see fig. 30 for reqd)*	REF	
- 2	728376-1	. . ELBOW, nasarr relief valve sensing line	1	
		Attaching Parts		
- 3	AN960D516	. . WASHER (88044)	1	
- 4	AN924-2D	. . NUT (88044)	1	
		——————✲——————		
	850652-101	. SYSTEM INSTL, radar pressurization *(see fig. 30 for reqd)*	REF	
- 5	763152-127	. . TUBE ASSY, air pressure modulator	1	
- 6	AN833-4C	. . ELBOW (88044)	1	
- 7	AN924-4D	. . NUT (88044)	3	
- 8	3297-2-4	. . PACKING (81400)	5	
- 9	98705	. . REGULATOR, absolute pressure (A0076) (71503) (Lockheed spec dwg 644615-11) (see T.O. 15A1-4-24-3)	1	
		Attaching Parts		
-10	NAS623-3-14	. . SCREW (80205)	2	
		——————✲——————		
-11	AN783C4	. . TEE (88044)	1	
-12	5108-2	. . VALVE ASSY, air pressure relief poppet (99470) (Lockheed spec dwg 658054-13) (see T.O. 15A2-9-22-3)	1	
-13	781704-67	. . TUBE ASSY, air pressure	1	
-14	AN815-4D	. . UNION (88044)	2	
-15	781704-69	. . TUBE ASSY, air pressure	1	
-16	AN939D4	. . ELBOW (88044)	1	
-17	5911-13	. . NOSE ASSY (91561)	1	
-18	AN960D716	. . WASHER (88044)	3	
-19	850301-117	. . TUBE ASSY, wave guide pressure	1	
-20	AN742D4	. . CLAMP (88044)	1	
		Attaching Parts		
-21	NAS623-3-24	. . SCREW (80205)	1	
-22	NAS43DD3-80	. . SPACER (80205)	1	
-23	MS21042L3	. . NUT (96906)	1	
		——————✲——————		
-24	98095	. . REGULATOR, absolute pressure (A0076) (71503) (Lockheed spec dwg 644615-1) (see T.O. 15A1-4-12-3)	1	
		Attaching Parts		
-25	NAS623-3-14	. . SCREW (80205)	2	
		——————✲——————		
-26	AN833-4D	. . ELBOW (88044)	3	
-27	AN924-4D	. . NUT (88044)	3	
-28	LS2805-2	. . WASHER (36659)	1	
-29	NAS1596-4	. . PACKING (80205)	2	
-30	850301-119	. . TUBE ASSY, wave guide pressure	1	
-31	601001-4-0170	. . HOSE ASSY (00624)	1	
	850652-107	C. . TUBING	1	
	850652-103	. PRESSURIZATION SYSTEM INSTL, radar *(see fig. 33 for reqd)* . . .	REF	
-32	101-152-5	. . DEHYDRATOR, (HR2) self-regenerating dessicant (A0809) (81833) (Lockheed spec dwg 644883-5) (see T.O. 15A14-2-3)	1	
		Attaching Parts		
	NAS623-3-2	. . SCREW (80205)	7	
	AN960-10L	. . WASHER (88044)	4	
	MS21042L3	. . NUT (96906)	4	
		——————✲——————		
-33	790784-91	. . TUBE ASSY, air pressure	1	
-34	AN815-4D	. . UNION (88044)	2	
-35	3297-2-4	. . PACKING (81400)	4	
-36	AN924-4C	. . NUT (88044)	1	
-37	FL1002-1	. . VALVE ASSY, flushing radar pressurization system (A0019) . . .	1	
-37A	AN960-816L	. . WASHER (88044)	1	

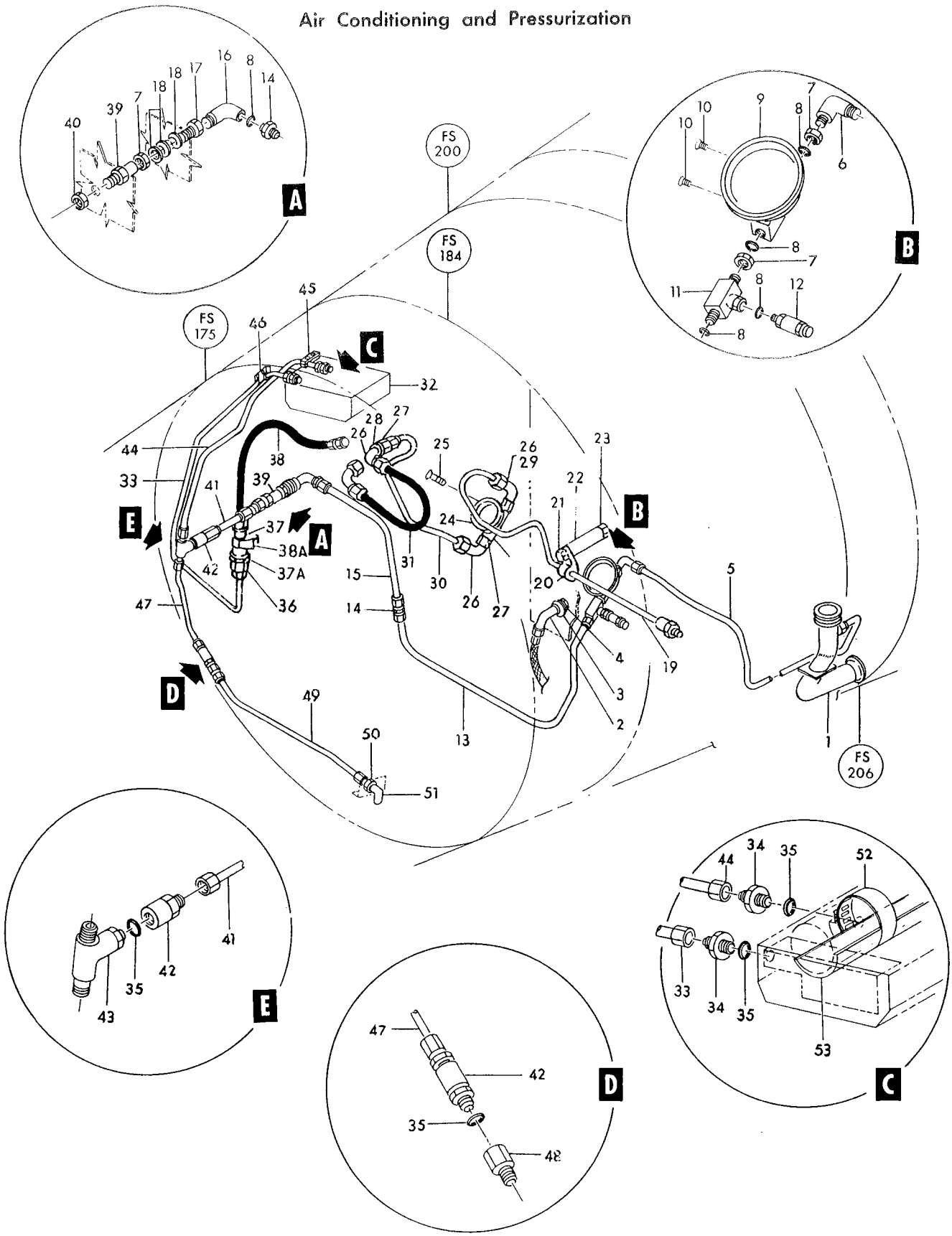

Figure 138— Radar Pressurization and Piping

Figura e particolare	NDR	1	2	3	4	5	6	7	DENOMINAZIONE	Quant.	Codice applicab.
138-38	AN6270-4-12								HOSE (88044)	1	
-38A	785341-1	A.							CLIP, disconnect support (Reworked and reidentified as 785341-101 per AA.1F-104-OT-703)	1	6701-6765
	785341-101	B.							CLIP, disconnect support	1	6766-
-39	5911-12								BODY (91561)	1	
-40	AN924-6D								NUT (88044)	1	
-41	796175-43								TUBE ASSY, air pressure	1	
-42	8R7642								VALVE, air check (A2898) (26044) (Lockheed spec dwg 658053-1)	2	
	1RF643S								FITTING, air check valve (26044)	1	
	AN6290-4								GASKET (88044)	1	
	8RS2								SPRING, air check valve (26044)	1	
	8R7P1								POPPET, air check valve (26044)	1	
	8RH642								HOUSING, air check valve (26044)	1	
-43	AN783C4								TEE (88044)	1	
-44	796175-39								TUBE ASSY, air pressure	1	
-45	794369-1								CLAMPBLOCK ASSY, radar plumbing (match comp do not stk sep)	1	
									Attaching Parts		
	NAS623-3-11								SCREW (80205)	2	
	AN960D10								WASHER (88044)	2	
	796331-1								SHIM	AR	
	MS21042L3								NUT (96906)	2	
-46	793377-7								CLAMPBLOCK ASSY, radar plumbing (match comp do not stk sep)	1	
									Attaching Parts		
	NAS623-3-14								SCREW (80205)	2	
	AN960D10								WASHER (88044)	2	
	MS21042L3								NUT (96906)	2	
-47	796175-41								TUBE ASSY, air pressure	1	
-48	AN894D4-3								BUSHING (88044)	1	
-49	781704-93								TUBE ASSY, air pressure	1	
-50	AN924-3D								NUT (88044)	1	
-51	AN833-3D								ELBOW (88044)	1	
-52	AN737TW82								CLAMP (88044)	1	
-53	845765-101								BUFFER, radome guiding	1	

A - Removed per AA.1F-104-OT-703
B - Reqd per AA.1F-104-OT-703
C - Reqd per AA.1F-104S-OT-168

Figura e particolare	NDR	1 2 3 4 5 6 7 DENOMINAZIONE	Quant.	Codice applicab.
		CANOPY AND ELECTRONIC COMPARTMENT COVER SEAL PRESSURIZATION TUBING AND EQUIPMENT		
139	784973-1	TUBE INSTL, canopy seal pressurization *(see fig 30 for reqd)*	REF	
- 1	781704-107	TUBE ASSY, canopy seal pressure	1	
- 2	AN783-4	TEE (88044)	1	
- 3	AN960D716	WASHER (88044)	3	
- 4	AN924-4	NUT (88044)	3	
- 5	3297-2-4	GASKET (81400)	5	
- 6	8R7642	VALVE, air check (A2898) (26044) (Lockheed spec dwg 658053-1)	1	
	1RF643S	FITTING, air check valve (26044)	1	
	AN6290-4	GASKET (88044)	1	
	8RS2	SPRING, air check valve (26044)	1	
	8R7P1	POPPET, air check valve (26044)	1	
	8RH642	HOUSING, air check valve (26044)	1	
- 7	781704-105	TUBE ASSY, canopy seal pressure	1	
- 8	AN833-4D	ELBOW (88044)	3	
- 9	AN924-4D	NUT (88044)	4	
	764125	CAP ASSY, canopy seal pressure	1	
-10	726306-3	CAP ASSY, flared tube fitting	1	
-11	RS106-60	CHAIN ASSY, canopy seal pressure cap (86831)	1	
	LS881-6	WASHER (36659)	1	
-12	764106	NAMEPLATE, canopy seal connection	1	
-13	781704-119	TUBE ASSY, canopy seal pressure	1	
-14	AN742D4	CLAMP (88044)	1	
		Attaching Parts		
	NAS623-3-8	SCREW (80205)	1	
	NAS43DD3-24	SPACER (80205)	1	
	MS21042L3	NUT (96906)	1	
-15	AN833-4	ELBOW (88044)	2	
	786001-1	HARNESS ASSY, canopy seal valve	1	
-16	11182B	VALVE, (L6) air pressure regulating solenoid (07940) (Lockheed spec dwg 658055-11) (see T.O. 15A1-4-17-3)	1	
		Attaching Parts		
	NAS623-3-21	SCREW (80205)	4	
-17	781704-63	TUBE ASSY, canopy seal air pressure	1	
-18	NAS623-3-20	SCREW (80205)	2	
-19	V3900-01	VALVE, (L5) pneumatic solenoid normally closed (96487) (Lockheed spec dwg 644812-1) (see T.O. 9P5-14-38-3)	1	
-20	AN804D4	TEE (88044)	1	
-21	781704-61	TUBE ASSY, canopy seal air pressure	1	
-22	781704-59	TUBE ASSY, canopy seal air pressure *(see fig. 203)*	1	
-23	781704-57	TUBE ASSY, canopy seal air pressure *(see fig. 48)*	1	
-24	762946-5	BRACKET, pressurization	1	
-25	762905	BRACKET ASSY, canopy seal regulator	1	
-26	774612-1	BRACKET ASSY, canopy seal shutoff valve *(see fig. 208 for reqd)*	REF	
	849665-101	HARNESS ASSY, P-32 disconnect to gun purge pressure switch *(see fig. 178 for reqd)*	REF	
-27	CA3106ER10SL4S	CONNECTOR, (P6) plug (canopy seal air pressure shutoff valve) (71468)	1	
-28	786204-5	DUCT ASSY, BL 0 to BL 22L rain removal *(see fig. 149 for reqd)*	REF	

Air Conditioning and Pressurization

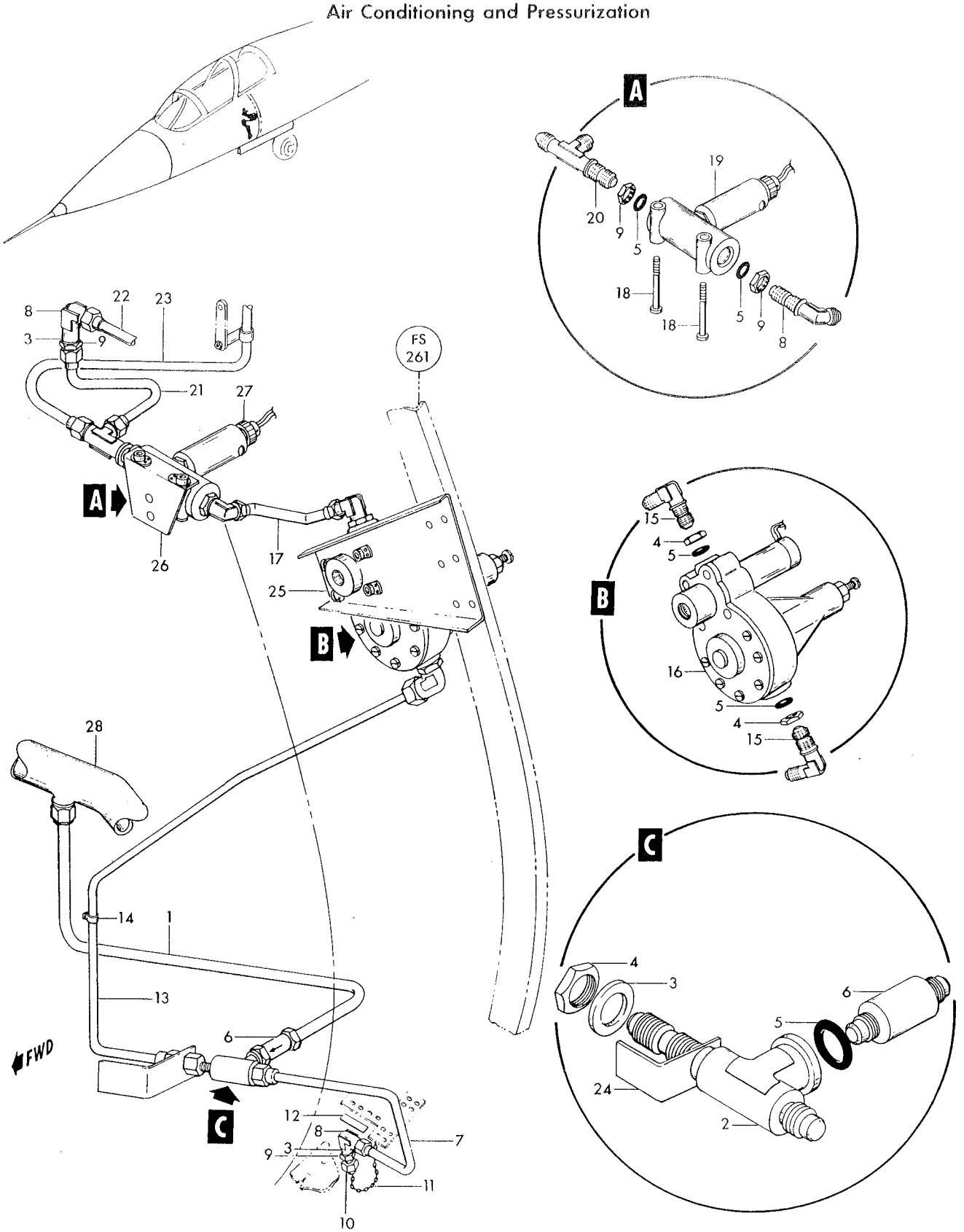

Figure 139—Canopy and Electronic Compartment Cover Seal Pressurization Tubing and Equipment

Figura e particolare	NDR	DENOMINAZIONE 1 2 3 4 5 6 7	Quant.	Codice applicab.
		ANTI-G VALVE AND PIPING FUSELAGE STATION 237 TO 255		
140	790062-101	PLUMBING INSTL, anti-G valve *(see fig. 30 for reqd)*	REF	6701-6740
	790062-103	PLUMBING INSTL, anti-G valve *(see fig. 30 for reqd)*	REF	6741-6865
	790062-105	PLUMBING INSTL, anti-G valve *(see fig. 30 for reqd)*	REF	6866-
- 1	MS21042L3	NUT (96906)	2	
- 2	AN960D10	WASHER (88044)	2	
- 3	AN520-10R8	SCREW (88044)	2	
- 4	AN742D10	CLAMP (88044)	2	
- 5	AN743B12	BRACKET (88044)	1	
		Attaching Parts		
- 6	AN520-10R8	SCREW (88044)	1	
- 7	AN960D10	WASHER (88044)	1	
- 8	MS21042L3	NUT (96906)	1	
- 9	796175-137	TUBE ASSY, anti-G valve outlet pressure	1	
-10	4178-10	RING, rigid tube connector fitting (98159)	1	
-11	790063-3	TUBE ASSY, anti-G valve outlet pressure	1	6701-6740
	790063-101	TUBE ASSY, anti-G valve outlet pressure	1	6741-
-12	790063-1	TUBE ASSY, anti-G valve inlet pressure *(see fig. 148)*	1	
-13	5503C30	VALVE, anti-G coveralls automatic regulating pressure (88535) (Lockheed spec dwg 644903-1) (13100-5 is an alternate) (see T.O. 15X8-7-5-3)	1	6701-6865
	13100-5	VALVE, anti-G coveralls automatic regulating pressure (03990) (Lockheed spec dwg 644903-1) (alternate for 5503C30) (see T.O. 15X8-7-9-4)	REF	6701-6865
	8400A-R-1	VALVE, anti-G coveralls automatic regulating pressure (88535) (Lockheed spec dwg 644903-101) (see sep. T.O. whn avail.)	1	6866-
		Attaching Parts		
-14	NAS1104-8	BOLT (80205)	3	
	AN960-416L	WASHER (88044)	3	
-15	790784-11	TUBE ASSY anti-G valve *(see fig. 148 for reqd)*	REF	

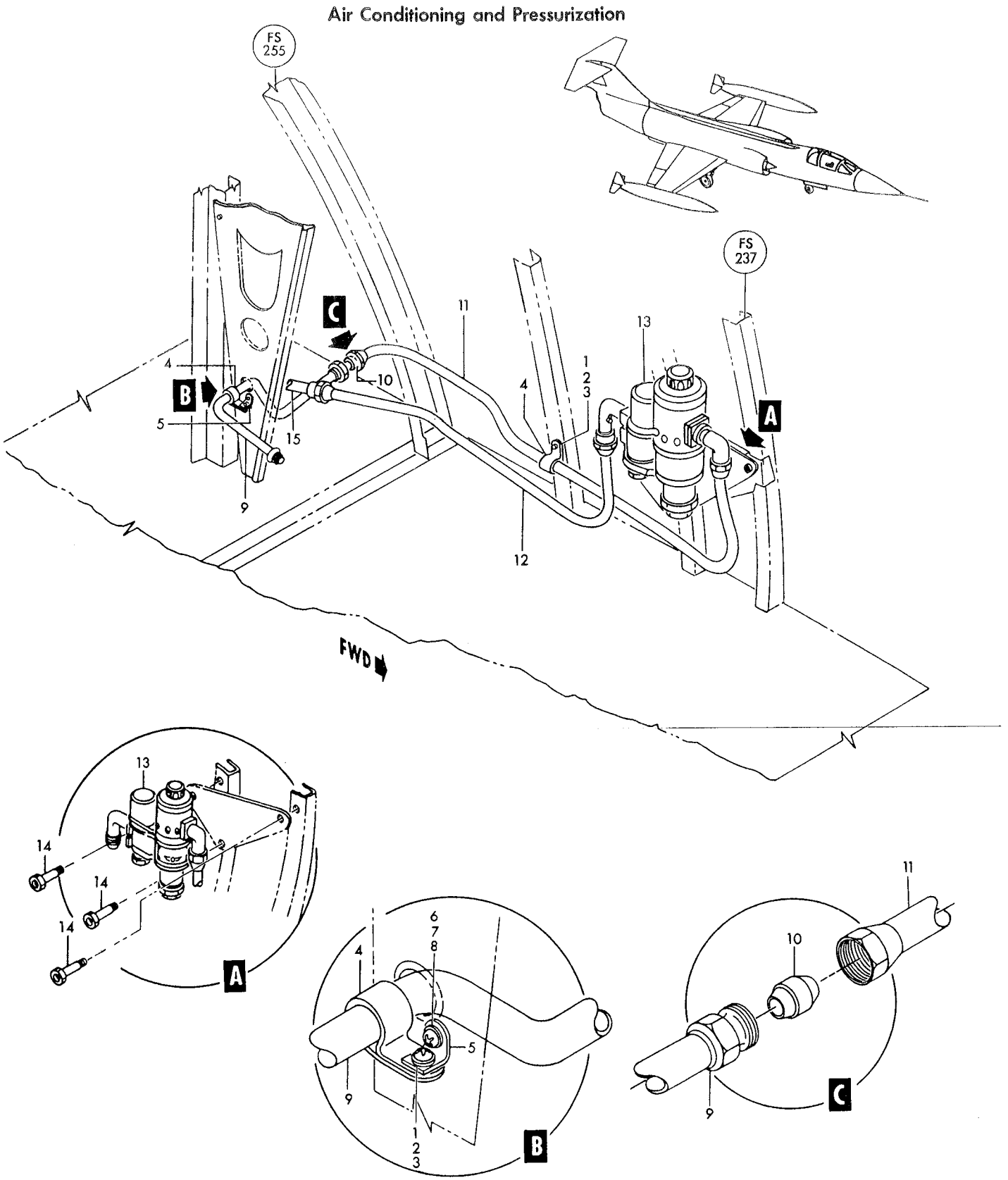

Figure 140— Anti-G Valve and Piping Fuselage Station 237 to 255

Figura e particolare	NDR	DENOMINAZIONE 1 2 3 4 5 6 7	Quant.	Codice applicab.
		WINDSHIELD AND CANOPY DEFOGGING		
141	784706-1	DUCT INSTL, windshield defogging *(see fig. 30 for reqd)*	REF	
- 1	770271-1	DUCT ASSY, windshield defogging	1	
	AN742D16	CLAMP (88044)	1	
		Attaching Parts		
	NAS1096-3-14	SCREW (80205)	1	
	AN960D10	WASHER (88044)	1	
	NAS43DD3-24	SPACER (80205)	1	
	MS21042L3	NUT (96906)	1	
- 2	764385-1	DUCT ASSY, windshield defogging	1	
- 3	AN735D16	CLAMP (88044)	4	
		Attaching Parts		
	NAS1096-3-7	SCREW (80205)	1	
	AN960D10	WASHER (88044)	1	
	MS21042L3	NUT (96906)	1	
- 4	MS28775-214	PACKING (96906)	10	
- 5	764390-1	COUPLING, windshield defogging duct	5	
- 6	764392-1	DUCT ASSY, windshield defogging	1	
- 7	769441-1	DUCT ASSY, windshield defogging	1	
- 8	764387-1	CLAMP, windshield defogging duct	1	
		Attaching Parts		
	NAS623-3-4	SCREW (80205)	2	
	AN960D10	WASHER (88044)	4	
	MS21042L3	NUT (96906)	2	
	784706-3	DUCT INSTL, windshield defogging *(see fig. 202 for reqd)*	REF	
- 9	784888-1	DUCT ASSY, windshield defogging	1	
-10	763639L	DUCT ASSY, windshield defogging LH	1	
-11	763639R	DUCT ASSY, windshield defogging RH	1	
	TA102-2-16-6	BRACKET (84971)	1	
-12	AN742-16	CLAMP (88044)	1	
		Attaching Parts		
	NAS1096-3-7	SCREW (80205)	1	
	AN960-10	WASHER (88044)	1	
	MS21042L3	NUT (96906)	1	
-13	AN742-12	CLAMP (88044)	2	
		Attaching Parts		
	NAS1096-3-7	SCREW (80205)	1	
	MS21042L3	NUT (96906)	1	
-14	763640	CONNECTOR, windshield defogging	2	
-15	1820-402-12	GASKET, silicone (81400)	4	
	784706-5	DUCT INSTL, windshield defogging (NHA 850168-101)	1	
-16	784886-1	DUCT ASSY, windshield defogging	1	
-17	784887-1	DUCT ASSY, windshield defogging	1	
-18	NAS592-16	RING (80205)	2	
-19	AN742-16	CLAMP (88044)	2	
		Attaching Parts		
	NAS1096-3-7	SCREW (80205)	1	
	AN960-10	WASHER (88044)	1	
	MS21042L3	NUT (96906)	1	
	784940-1	CONTROLLER INSTL, defogger *(see fig. 30 for reqd)*	REF	
-20	106762-1	CONTROLLER, pilot's defogger (A0076) (70210) (Lockheed spec dwg 644876-1) (see T.O. 15A8-5-25-3) *(see fig. 224)*	1	

Air Conditioning and Pressurization

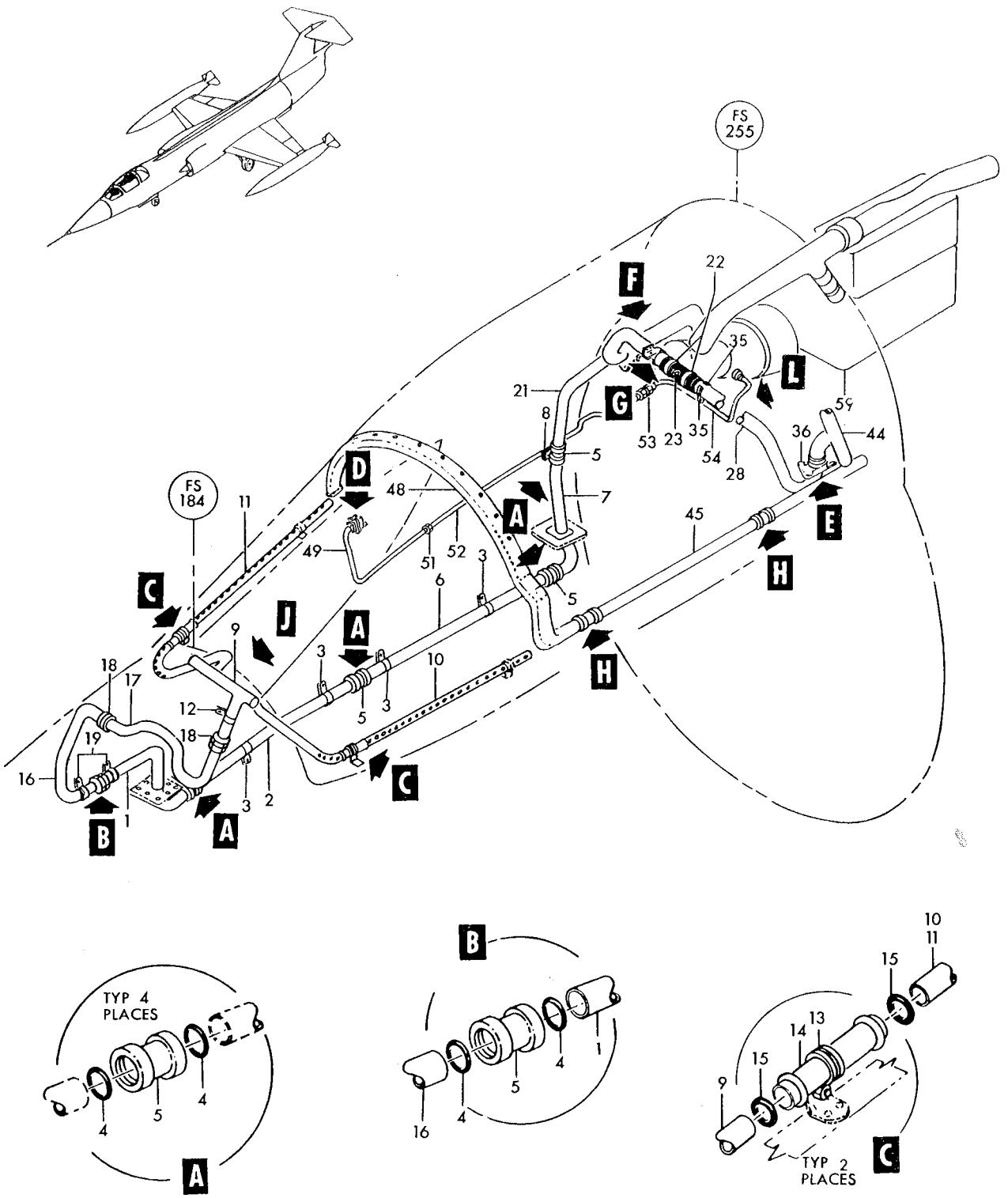

Figure 141— Windshield and Canopy Defogging (Sheet 1 of 2)

Air Conditioning and Pressurization

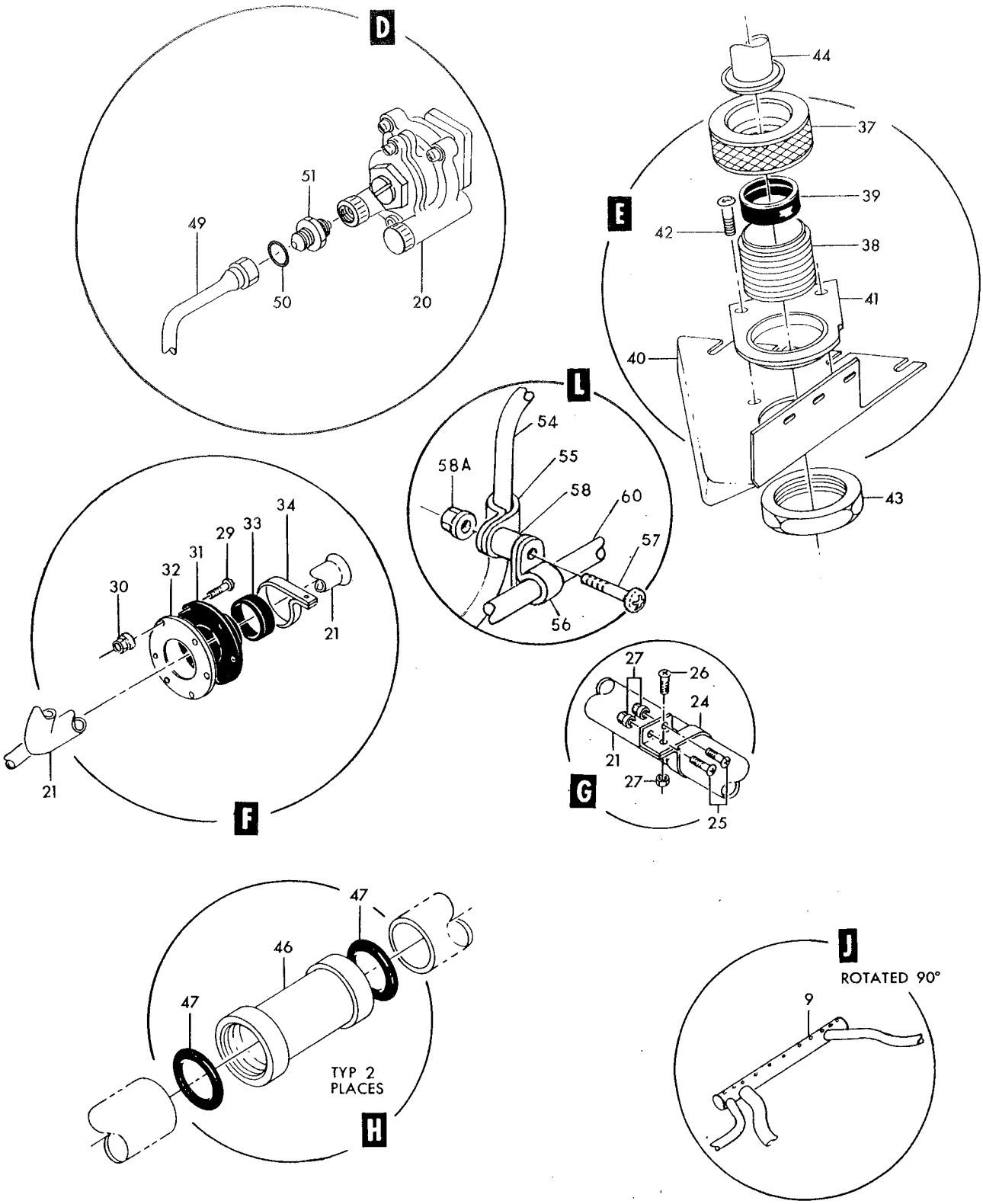

Figure 141 — Windshield and Canopy Defogging (Sheet 2 of 2)

Figura e particolare	NDR	1 2 3 4 5 6 7 DENOMINAZIONE	Quant.	Codice applicab.
		Attaching Parts		
141	NAS1203-4	SCREW (80205)	4	
	AN960D10	WASHER (88044)	4	
	MS21042L3	NUT (96906)	4	
		✲		
	780815-1	DUCT INSTL, windshield and canopy defogging (NHA 850168-101)	1	6701-6815
	780815-101	DUCT INSTL, windshield and canopy defogging (NHA 850168-101)	1	6816-
-21	780769-1	DUCT ASSY, windshield and canopy defogging	1	
-22	AN737RM56	CLAMP (88044)	2	
-23	LS1611A6-16	HOSE, flexible air duct (36659)	1	
-24	796-24	CLAMP, loop type (00502)	1	
		Attaching Parts		
-25	NAS623-3-3	SCREW (80205)	2	
-26	NAS623-3-2	SCREW (80205)	1	
-27	MS21042L3	NUT (96906)	3	
		✲		
-28	780770-1	DUCT ASSY, windshield and canopy defogging	1	
-29	NAS623-3-4	SCREW (80205)	6	
-30	MS21042L3	NUT (96906)	6	
-31	751107-1	BOOT, defogging duct	1	
-32	773128-1	RETAINER, defogging duct	1	
-33	751147-1	SLEEVE, defogging boot	1	
-34	320-62-237SH	CLAMP, T bolt (98625)	1	6701-6815
	MS21920-20	CLAMP (96906)	1	6816-
-35	780933-1	COLLAR, canopy defogging duct	2	
		Attaching Parts		
	NAS623-3-6	SCREW (80205)	1	
	AN960-10L	WASHER (88044)	1	
	MS21042L3	NUT (96906)	1	
		✲		
	780814-1	BRACKET INSTL, canopy defogging disconnect (NHA 850168-101)	1	
-36	780814-3	RETAINER ASSY, canopy defogging disconnect	1	
-37	780775-1	NUT, canopy defogging seal retainer	1	
-38	780777-1	RETAINER, canopy defogging disconnect seal	1	
	780772-1	CLIP, defogging disconnect support	1	
-39	780776-1	SEAL, defogging disconnect	1	
-40	780773-1	BRACKET, defogging disconnect	1	
		Attaching Parts		
	NAS623-3-3	SCREW (80205)	4	
	NAS623-3-6	SCREW (80205)	3	
	LS881-7	WASHER, plain aluminum (36659)	4	
	AN960-10L	WASHER (88044)	AR	
		✲		
	780771-1	SUPPORT, disconnect bracket	1	
		Attaching Parts		
	AN520-10R8	SCREW (88044)	2	
	AN960D10	WASHER (88044)	2	
	MS21042L3	NUT (96906)	2	
		✲		
-41	762152	BRACKET, defogging disconnect	1	
		Attaching Parts		
-42	AN502-10-8	SCREW (88044)	2	
	AN960-10L	WASHER (88044)	2	
	MS21042L3	NUT (96906)	2	
		✲		
-43	726405	NUT, defogging disconnect	1	
	FL0242-103	CANOPY ASSY, complete (A0019) *(see fig. 203 for reqd)*	REF	
-44	780579-1	SUPPORT ASSY, canopy LH *(see fig. 209 for reqd)*	REF	
-45	780563-1	DUCT, canopy defogging	1	
-46	781081-1	COUPLING, windshield defogging duct	2	

Figura e particolare	NDR	1	2	3	4	5	6	7	DENOMINAZIONE	Quant.	Codice applicab.
141-47	MS28775-214		.	.					PACKING (96906)	4	
-48	780568-1		.						DUCT ASSY, canopy *(see fig. 203 for reqd)*	REF	
	787124-501		.						PLUMBING INSTL, defogger controller *(see fig. 30 for reqd)*	REF	
-49	785677-17		.	.					TUBE ASSY, defogger controller	1	
-50	3297-402-4		.	.					PACKING (81400)	1	
-51	AN815-4D		.	.					UNION (88044)	2	
-52	785677-7		.	.					TUBE ASSY, defogger controller	1	
	AN924-4D		.	.					NUT (88044)	1	
	AN960D716		.	.					WASHER (88044)	1	
-53	AN832-4D		.	.					UNION (88044)	1	
-54	786410-109		.	.					TUBE ASSY, defogger controller	1	
-55	AN742D4	A.	.						CLAMP (88044)	1	
-56	AN742D5	A.	.						CLAMP (88044)	1	
									Attaching Parts		
-57	NAS623-3-9	A.	.						SCREW (80205)	1	
-58	NAS43DD3-28	A.	.						SPACER (80205)	1	
-58A	MS21042L3	A.	.						NUT (96906)	1	
-59	682920-1-1		.						PACKAGE, (E33) air conditioning (A0076) (70210) (Lockheed spec dwg 644862-11) (see T.O. 15A3-3-35-4) (For spare replacement use 682920-1-2) *(see fig. 154 for reqd)*	REF	6701-6820
	682920-1-2		.						PACKAGE, (E33) air conditioning (A0076) (70210) Lockheed spec dwg 644862-101) (see sep. T.O. whn avail.) (Spare replacement for 682920-1-1) *(see fig. 154 for reqd)*	REF	6821-
-60	765337-111		.						TUBE ASSY, after burner nozzle control *(see fig. 95 for reqd)*	REF	

A - Reqd per AA.1F-104-OT-747A

Figura e particolare	NDR	DENOMINAZIONE 1 2 3 4 5 6 7	Quant.	Codice applicab.
		COCKPIT AIR DUCTS		
142- 1	772437-103	VALVE ASSY, electronic compartment cooling air control (see T.O. 15A2-3-31-3) *(see fig. 144 for reqd)*	REF	
	796510-3	DUCT INSTL, cabin air *(see fig. 30 for reqd)*	REF	
- 2	AN520-10R12	SCREW (88044)	7	
- 3	AN960-10L	WASHER (88044)	7	
- 3A	MS21042L3	NUT (96906)	7	
- 4	761935	SEAL, footwarmer air duct	1	
- 5	761933	NIPPLE ASSY, footwarmer air duct	1	
	796510-1	DUCT INSTL, cabin air (NHA 850168-101)	1	
- 6	AN520-10R12	SCREW (88044)	7	
- 6A	AN520-10R14	SCREW (88044)	8	
- 7	AN960-10L	WASHER (88044)	16	
- 8	AN520-10R8	SCREW (88044)	1	
- 9	MS21042L3	NUT (96906)	16	
-12	AN737TW91	CLAMP (88044)	2	
-13	LS1611A10-14	HOSE, flexible air duct (36659)	1	
-14	774693-1	DUCT ASSY, cabin air disposal safety valve	1	
		Attaching Parts		
-15	NAS517-3-1	SCREW (80205)	14	
		*		
-16	774695-1	SEAL, cabin air disposal safety valve	1	
-17	785518-1	DUCT ASSY, cabin air disposal	1	
		Attaching Parts		
-18	NAS623-3-5	SCREW (80205)	7	
-19	NAS623-3-4	SCREW (80205)	6	
-20	NAS623-3-3	SCREW (80205)	4	
	LS881-2	WASHER, plain aluminum (36659)	34	
	MS21042L3	NUT (96906)	17	
		*		
-21	774696-1	SEAL, cabin air disposal safety valve	1	
-22	774697-1	SHIELD ASSY, cabin air disposal safety valve	1	
		Attaching Parts		
-23	NAS623-3-1	SCREW (80205)	3	
-23A	LS881-2	WASHER, plain aluminum (36659)	3	
-23B	MS21042L3	NUT (96906)	3	
		*		
-24	778799-1	SEAL, footwarmer air duct	1	
-25	761934	SEAL, cabin air duct	2	
-26	AN737TW74	CLAMP (88044)	4	
-27	785516-1	TUBE, cabin air flexible	1	
-28	751125-19	TUBE, cabin air flexible	1	
-29	785517-1	TEE ASSY, footwarmer air duct	1	
	796265-1	OUTLET ASSY, cabin air duct	1	
-31	780878-2	OUTLET ASSY, cabin air	1	
-32	780878-9	DIFFUSER, cabin air	1	
-33	785534-3	CROSS, cabin air	1	
-34	785534-7	DUCT, cabin air	1	
	761931-13	ORIFICE, cabin air	1	
-35	761931-6	FLANGE, cabin air	2	
	796261-1	NOZZLE INSTL, directable cabin airflow	1	
-37	796262-1	NOZZLE, directable cabin airflow	1	
		Attaching Parts		
-38	NAS1096-3-12	SCREW (80205)	1	
-39	LS881-11	WASHER (36659)	1	
-40	3502-10-01	WASHER (30323)	1	
		*		
-41	796153-1	PAD, directable cabin airflow	1	
-42	796263-1	ELBOW ASSY, directable cabin airflow	1	

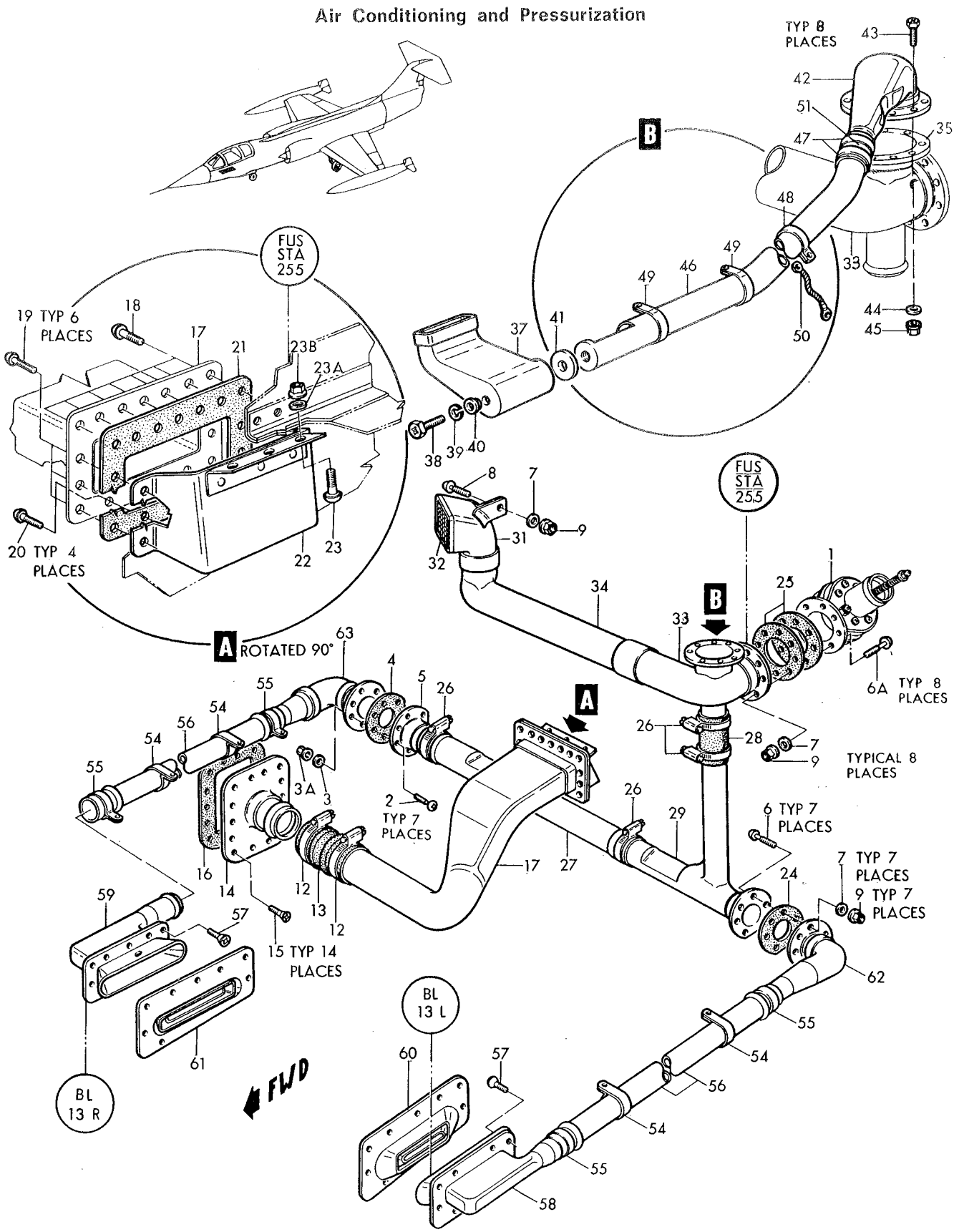

Figure 142–Cockpit Air Ducts

Figura e particolare	NDR	DENOMINAZIONE	Quant.	Codice applicab.
		Attaching Parts		
142-43	NAS1096-3-10	SCREW (80205)	8	
-44	AN960D10	WASHER (88044)	8	
-45	MS21042L3	NUT (96906)	8	
-46	796264-1	DUCT, directable cabin airflow	1	
-47	AN735D22	CLAMP (88044)	2	6701-6740
	AN735-21	CLAMP (88044)	2	6741-
-48	AN735D20	CLAMP (88044)	1	
-49	AN742D20	CLAMP (88044)	2	
-50	MS25083-1BB4	JUMPER (96906)	1	
		Attaching Parts		
	NAS1096-3-8	SCREW (80205)	2	
	AN515-8R8	SCREW (88044)	1	
	AN515-8R10	SCREW (88044)	1	
	NAS1096-3-9	SCREW (80205)	2	
	AN960D10	WASHER (88044)	2	
	AN960D8	WASHER (88044)	1	
	LS881-14	WASHER (36659)	2	
	NAS42DD6-8	SPACER (80205)	2	
	MS21042L08	NUT (96906)	1	
	MS21042L3	NUT (96906)	2	
-51	LS1611A5-5	HOSE, flexible air duct (36659)	1	6701-6740
	LS1611A5-7	HOSE, flexible air duct (36659)	1	6741-
	761173-3L	DUCT INSTL, footwarmer *(see fig. 30 for reqd)*	REF	
	761173-3R	DUCT INSTL, footwarmer *(see fig. 30 for reqd)*	REF	
-54	AN742D24	CLAMP (88044)	2	
-55	AN737TW56	CLAMP (88044)	2	
-56	751125-17	TUBE, cabin air flexible	1	
-57	AN507-632R8	SCREW (88044)	8	
	NAS391-6P	WASHER (80205)	8	
-58	776463-1	FOOTWARMER ASSY, cabin air LH	1	
-59	776463-2	FOOTWARMER ASSY, cabin air RH	1	
-60	776464-1	DEFLECTOR ASSY, cabin air footwarmer LH	1	
-61	776464-2	DEFLECTOR ASSY, cabin air footwarmer RH	1	
-62	761444L	DUCT, footwarmer inlet	1	
-63	766147-1	DUCT INLET ASSY, RH side footwarmer	1	

Figura e particolare	NDR	DENOMINAZIONE 1 2 3 4 5 6 7	Quant.	Codice applicab.
		ELECTRONIC COMPARTMENT DEFOGGING		
143	785552-5	DUCT INSTL, electronic compartment defogging *(see fig. 30 for reqd)*	REF	
-1	785591-11	DUCT ASSY, electronic compartment defogging	1	
	785591-9	DUCT electronic compartment defogging	1	
	4177-12	COUPLING (98159)	1	
-2	4178-12	RING (98159)	1	
-3	AN737RM34	CLAMP (88044)	2	
-4	LS1611A3-12	HOSE, flexible air duct (36659)	1	
-5	LS3839-12-12	BLANKET, aluminum foil (36659)	1	
-6	LS3839-12-8	BLANKET, aluminum foil (36659)	1	
-7	TA102-2-6-6	BRACKET (84971)	1	
-7A	TA102-2-16-6	BRACKET (84971)	1	
-8	AN742D12	CLAMP (88044)	2	
		Attaching Parts		
-9	NAS623-3-4	SCREW (80205)	1	
-10	AN960D10	WASHER (88044)	1	
-11	MS21042L3	NUT (96906)	1	
		*		
-12	786162-1	DUCT ASSY, electronic compartment defogging	1	
		Attaching Parts		
-13	NAS623-3-4	SCREW (80205)	2	
-14	NAS517-3-2	SCREW (80205)	2	
-15	785556-1	SHIM, defogging duct	AR	
-16	AN960-10	WASHER (88044)	4	
-17	MS21042L3	NUT (96906)	4	
		*		
-18	AN3066-8	NUT (88044)	1	
-19	763718	RETAINER, electronic compartment defogging seal	1	
-20	763716	CAP, electronic compartment defogging connection	1	
-21	763717	SEAL, electronic compartment defogging connection	1	
	785552-3	DUCT INSTL, electronic compartment defogging *(see fig. 47 for reqd)*	REF	
-22	MS21919WH8	CLAMP (96906)	6	
		Attaching Parts		
	NAS623-3-4	SCREW (80205)	1	
	AN960D10	WASHER (88044)	1	
	MS21042L3	NUT (96906)	1	
		*		
-23	MS21919WH8	CLAMP (96906)	3	
		Attaching Parts		
	NAS623-3-3	SCREW (80205)	1	
	AN960D10	WASHER (88044)	1	
		*		
-24	780895-3	WELD ASSY, electronic compartment defogging	1	
-25	763720	FITTING, electronic compartment defogging end	1	
-26	781816-1	TUBE, defogging duct connector tapered	1	
-27	773963-81	TUBE, electronic compartment defogging	1	
-28	781817-1	INSERT, defogging duct vee type	1	
-29	763721-7	PLATE, electronic compartment defogging duct head	1	
-30	773963-85	TUBE, electronic compartment defogging	1	
-31	LS1611A2-10	HOSE, flexible air duct (36659)	2	
-32	AN737RM24	CLAMP (88044)	4	
-33	780895-9	WELD ASSY, electronic compartment defogging	1	
-34	682920-1-1	PACKAGE, (E33) air conditioning (A0076) (70210) Lockheed spec dwg 644862-11) (see T.O. 15A3-3-35-4) (For spare replacement use 682920-1-2) *(see fig. 154 for reqd)*	REF	6701-6820
	682920-1-2	PACKAGE, (E33) air conditioning (A0076) (70210) (Lockheed spec dwg 644862-101) (see sep. T.O. whn avail.) (Spare replacement for 682920-1-1) *(see fig. 154 for reqd)*	REF	6821-

Air Conditioning and Pressurization

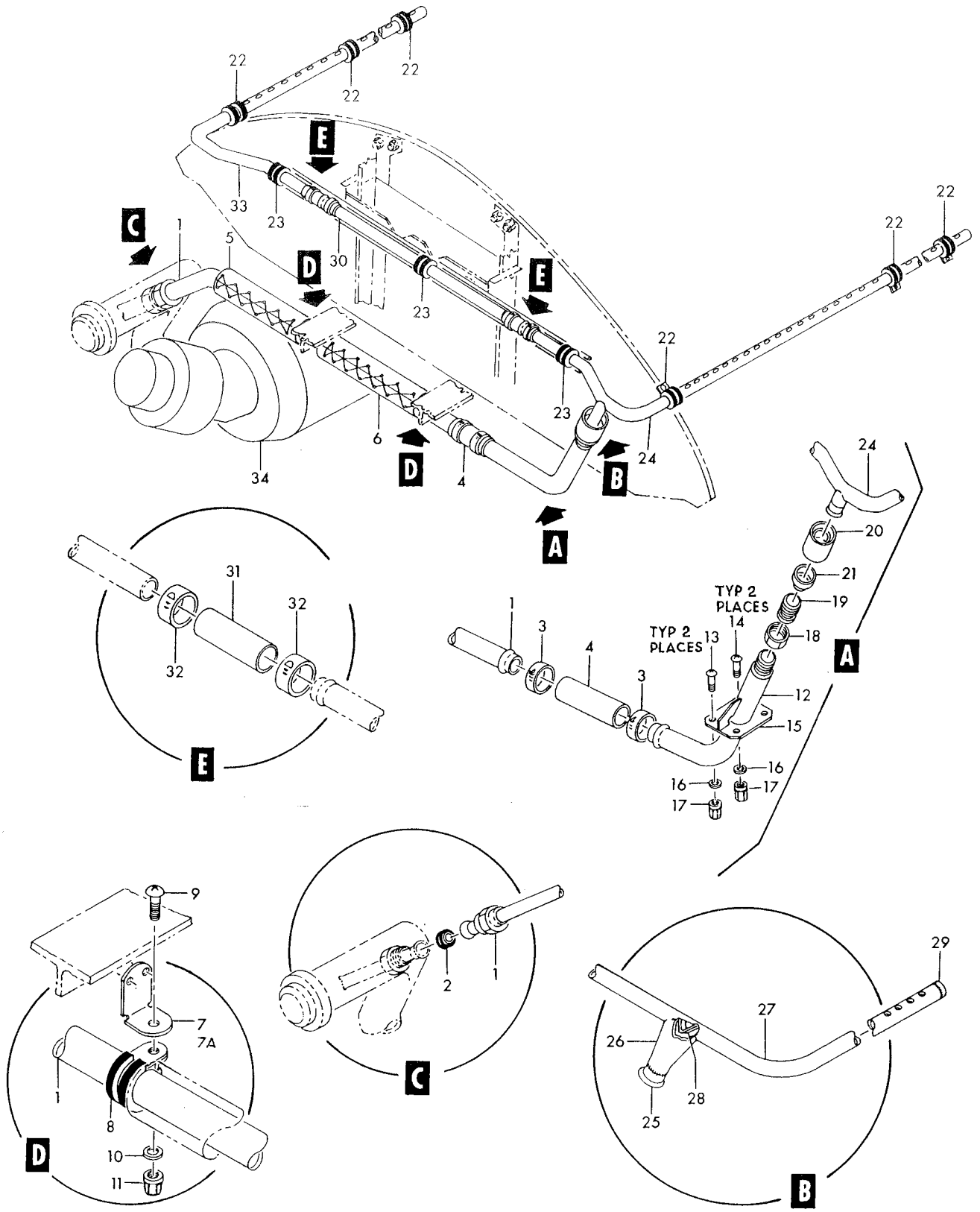

Figure 143— Electronic Compartment Defogging

Figura e particolare	NDR	DENOMINAZIONE	Quant.	Codice applicab.
		CABIN AIR WATER SEPARATOR		
144	784694-103	SEPARATOR INSTL, cabin air duct water (NHA 850168-101)	1	
- 1	547478-1	LIMITER, (S8) minimum temperature (A0076) (70210) (Lockheed spec dwg 644881-3) (see T.O. 15A5-6-11-2)	1	
- 2	547470-4	SWITCH, (S9) maximum temperature (A0076) (70210) (Lockheed spec dwg 644881-1) (see T.O. 8S6-4-20-2)	1	
- 2A	MS35769-9	GASKET (96906)	1	
- 2B	MS35769-11	GASKET (96906)	1	
- 3	MS21913D6	PLUG (96906)	1	
- 3A	MS35769-10	GASKET (96906)	1	
- 4	MS28777-6	GASKET (96906)	1	
- 5	83110-7	SEPARATOR, water (complete with bypass valve) (A0076) (70210) (Lockheed spec dwg 644570-15) (see T.O. 15A7-2-11-53)	1	
		Attaching Parts		
- 6	NAS623-3-4	SCREW (80205)	4	
- 7	320-62-325SH	CLAMP, standard T bolt (98625)	2	
- 8	751080-3	DUCT, water separator air	1	
-10	772437-103	VALVE ASSY, electronic compartment cooling air control (see T.O. 15A2-3-31-3) (parts kits available) *(see fig. 142)*	1	
		Partial breakdown follows		
-11	NAS220-8	SCREW (80205)	16	
-12	AN960D8	WASHER (88044)	16	
-13	MS21042L08	NUT (96906)	2	
-14	MS21042L3	NUT (96906)	1	
-15	772444-1	RETAINER, control valve spring	1	
-16	727703-1	SPRING, control valve	1	
-17	772441-1	BUSHING, control valve	1	
-18	MS21042L6	NUT (96906)	1	
-19	AN960D616	WASHER (88044)	1	
-20	NAS43DD6-20	SPACER (80205)	1	
-21	751077-1	SEAL, control valve	1	
-22	MS21042L08	NUT (96906)	14	
-25	774885-1	ELBOW, cabin air duct water separator	1	
-26	774886-1	BOLT, cabin air duct water separator	1	
-27	AN6290-4	GASKET (88044)	1	
-28	MS28775-011	PACKING (96906)	1	
-29	768206-69	TUBE ASSY, water separator drain	1	
-30	AN837-4D	ELBOW (88044)	1	
-31	AN960D716	WASHER (88044)	1	
-32	AN6290-4	GASKET (88044)	1	
-33	AN924-4D	NUT (88044)	2	
-34	770439-1	FITTING, tube end (make from AN832-4D)	1	
-35	MS21042L3	NUT (96906)	1	
-36	NAS43DD3-8	SPACER (80205)	1	
-37	NAS1096-3-10	SCREW (80205)	1	
-38	AN742D4	CLAMP (88044)	1	
-39	796175-29	TUBE ASSY, bleed air control valve	1	
	784694-101	TUBE INSTL, cabin air duct water LH *(see fig. 30 for reqd)*	REF	
-40	781704-41	TUBE ASSY, water separator drain	1	
-41	MS35489-7	GROMMET (96906)	1	
-42	AN833-4D	ELBOW (88044)	1	
-43	AN6290-4	GASKET (88044)	1	
-44	AN924-4D	NUT (88044)	1	
-45	AN960D716	WASHER (88044)	1	
-46	AN742D4	CLAMP (88044)	1	
	AN502-10-6	SCREW (88044)	1	
	MS21042L3	NUT (96906)	1	

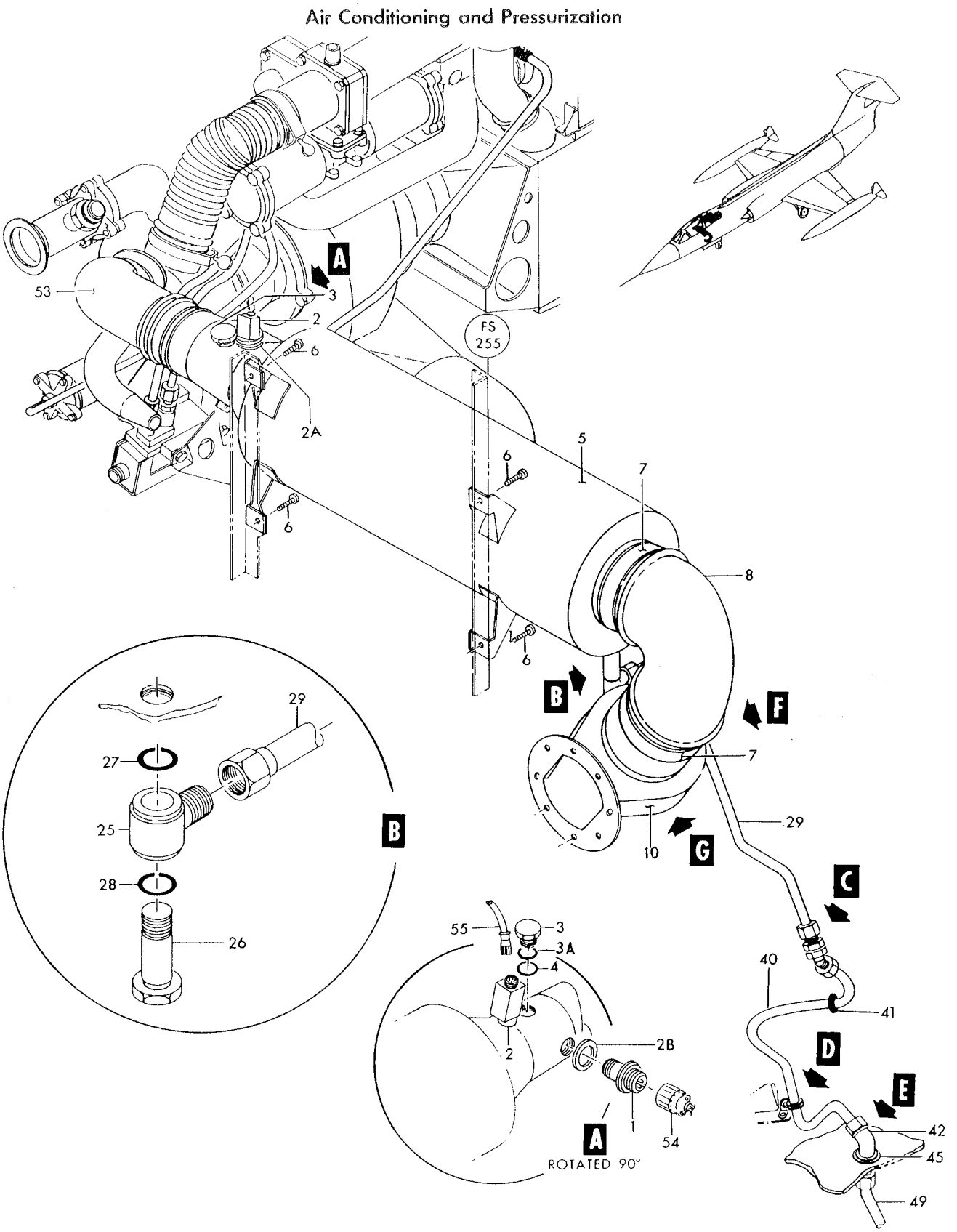

Figure 144— Cabin Air Water Separator (Sheet 1 of 2)

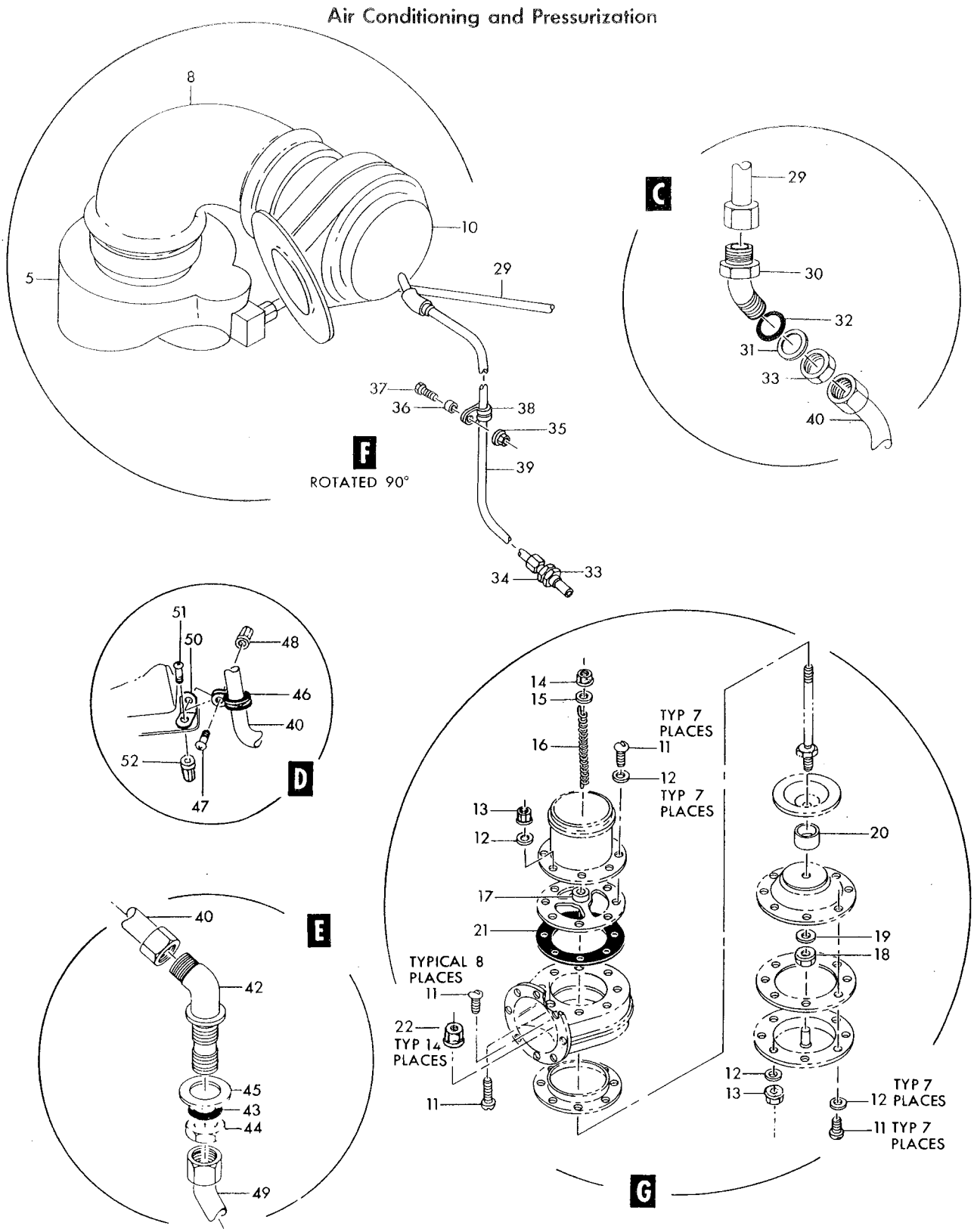

Figure 144 — Cabin Air Water Separator (Sheet 2 of 2)

Figura e particolare	NDR	1 2 3 4 5 6 7 DENOMINAZIONE	Quant.	Codice applicab.
144-47	AN520-10R10	. . SCREW (88044)	1	
-48	MS21042L3	. . NUT (96906)	1	
-49	761179-7	. . TUBE ASSY, water separator drain	1	
	784694-5	. BRACKET INSTL, cabin air duct *(see fig. 147 for reqd)*	REF	
-50	AN743B12	. . BRACKET (88044)	1	
-51	NAS623-3-3	. . SCREW (80205)	1	
-52	MS21042L3	. . NUT (96906)	1	
-53	4695-3	. DUCT, mixing chamber to water separator flexible air (99135) (Lockheed spec dwg 751139-3) *(see fig. 154 for reqd)*	REF	
	849674-101	. HARNESS ASSY, bulkhead 255 RH P-39 disconnect to electronic compartment *(see fig. 180 for reqd)*	REF	6701-6740
	852101-101	. HARNESS ASSY, bulkhead 255 RH P-39 disconnect to electronic compartment *(see fig. 180 for reqd)*	1	6741-
-54	CA3106ER10SL4S	. . CONNECTOR, (P6) plug (high limit thermal switch) (71468) . . .	1	
-55	MS25183-14S5S	. . CONNECTOR, (P18) plug (duct temperature) (96906)	1	

Figura e particolare	NDR	1 2 3 4 5 6 7 DENOMINAZIONE	Quant.	Codice applicab.
		CABIN AIR AND ELECTRONIC COMPARTMENT PRESSURIZATION PIPING AND EQUIPMENT FUSELAGE STATION 195 TO 284		
145	784461-3	PLUMBING INSTL, cockpit and electronic compartment pressure equipment (NHA 850168-101) *(see fig. 146)*	1	
-1	AN924-4D	NUT (88044)	6	
-2	AN960D716	WASHER (88044)	6	
-3	AN832-4D	UNION (88044)	1	
-4	AN833-4D	ELBOW (88044)	4	
-5	AN6290-4	GASKET (88044)	2	
-6	781704-81	TUBE ASSY, cabin sensing air pressure	1	
-7	763152-29	TUBE ASSY, cabin sensing air pressure	1	
-8	773963-115	TUBE ASSY, cabin sensing air pressure	1	
	784461-101	A. PLUMBING INSTL, cockpit and electronic compartment pressure equipment *(see fig. 30 for reqd)*	REF	
	784461-103	B. PLUMBING INSTL, cocpitk and electronic compartment pressure equipment *(see fig. 30 for reqd)*	REF	
-9	AN815-4D	UNION (88044)	3	
-10	781704-35	TUBE ASSY, cabin sensing air pressure *(see fig. 146 for reqd)*	REF	
-11	781704-37	TUBE ASSY, cabin sensing air pressure *(see fig. 146 for reqd)*	REF	
-12	781704-95	TUBE ASSY, cabin sensing air pressure *(see fig. 146 for reqd)*	REF	
-13	AN6290-4	GASKET (88044)	1	
-14	AN833-4D	ELBOW (88044)	1	
-15	773963-25	TUBE ASSY, cabin sensing air pressure	1	
-16	773963-61	TUBE ASSY, cabin sensing air pressure	1	
-17	781704-83	TUBE ASSY, cabin sensing air pressure	1	
-18	AN815-4D	UNION (88044)	1	
-19	781704-79	TUBE ASSY, cabin sensing air pressure	1	
-20	781704-85	TUBE ASSY, cabin sensing air pressure	1	
-21	7-1855-5	VALVE, manually operated shutoff plug (86768) (Lockheed spec dwg 644618-1) (see LR15-14404-217-3)	1	6701-6705
	SM2509	VALVE, manually operated shutoff plug (A0303) (see separate publication when available)	1	6706-
-22	781704-87	TUBE ASSY, cabin sensing air pressure	1	
-23	AN824-4D	TEE (88044)	2	
-24	763656	CHAIN ASSY, static sensing line cap	2	
	726306-3	CAP ASSY, static sensing line	1	
	RS106-62	CHAIN ASSY (86831)	1	
-25	781704-77	TUBE ASSY, cabin sensing air pressure	1	
-26	AN924-4D	NUT (88044)	1	
-27	AN960D716	WASHER (88044)	1	
-28	AN837-4D	ELBOW (88044)	1	
-29	773963-69	TUBE ASSY, cabin sensing air pressure	1	
-30	AN815-4D	UNION (88044)	1	
-31	768206-1	TUBE ASSY, cabin sensing air pressure	1	
-32	AN815-4D	UNION (88044)	1	
-33	763152-23	TUBE ASSY, cabin sensing air pressure	1	
-34	AN815-4D	UNION (88044)	1	
-35	763152-22	TUBE ASSY, cabin sensing air pressure	1	
-36	AN924-4D	NUT (88044)	1	
-37	AN960D716	WASHER (88044)	1	
-38	AN837-4D	ELBOW (88044)	1	
-39	781704-55	TUBE ASSY, cabin sensing air pressure	1	
-40	763579	NAMEPLATE, static sensing drain	2	
-41	763578	NAMEPLATE, cabin pressure equipment ground check shutoff valve	1	
-42	765874-1	NAMEPLATE, pressure sensing port	1	
	784461-5	STATIC TUBE INSTL, cockpit and electronic compartment pressure equipment *(see fig. 30 for reqd)*	REF	
-43	769928-1	TUBE, flush static pressure	1	
	785020-1	VALVE INSTL, cabin safety *(see fig. 30 for reqd)*	REF	

Air Conditioning and Pressurization

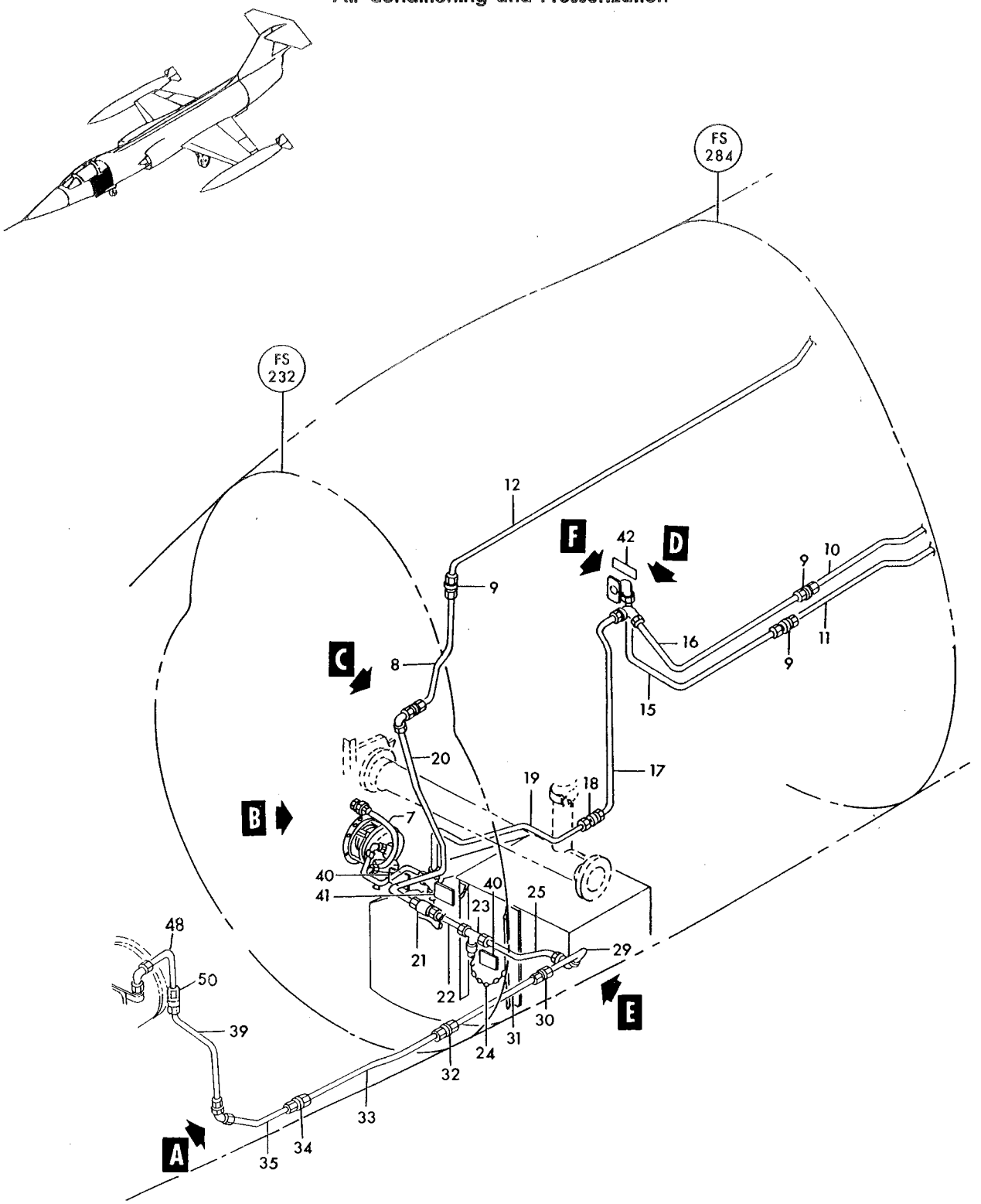

Figure 145—Cabin Air and Electronic Compartment Pressurization Piping and Equipment Fuselage Station 195 to 284 (Sheet 1 of 2)

Air Conditioning and Pressurization

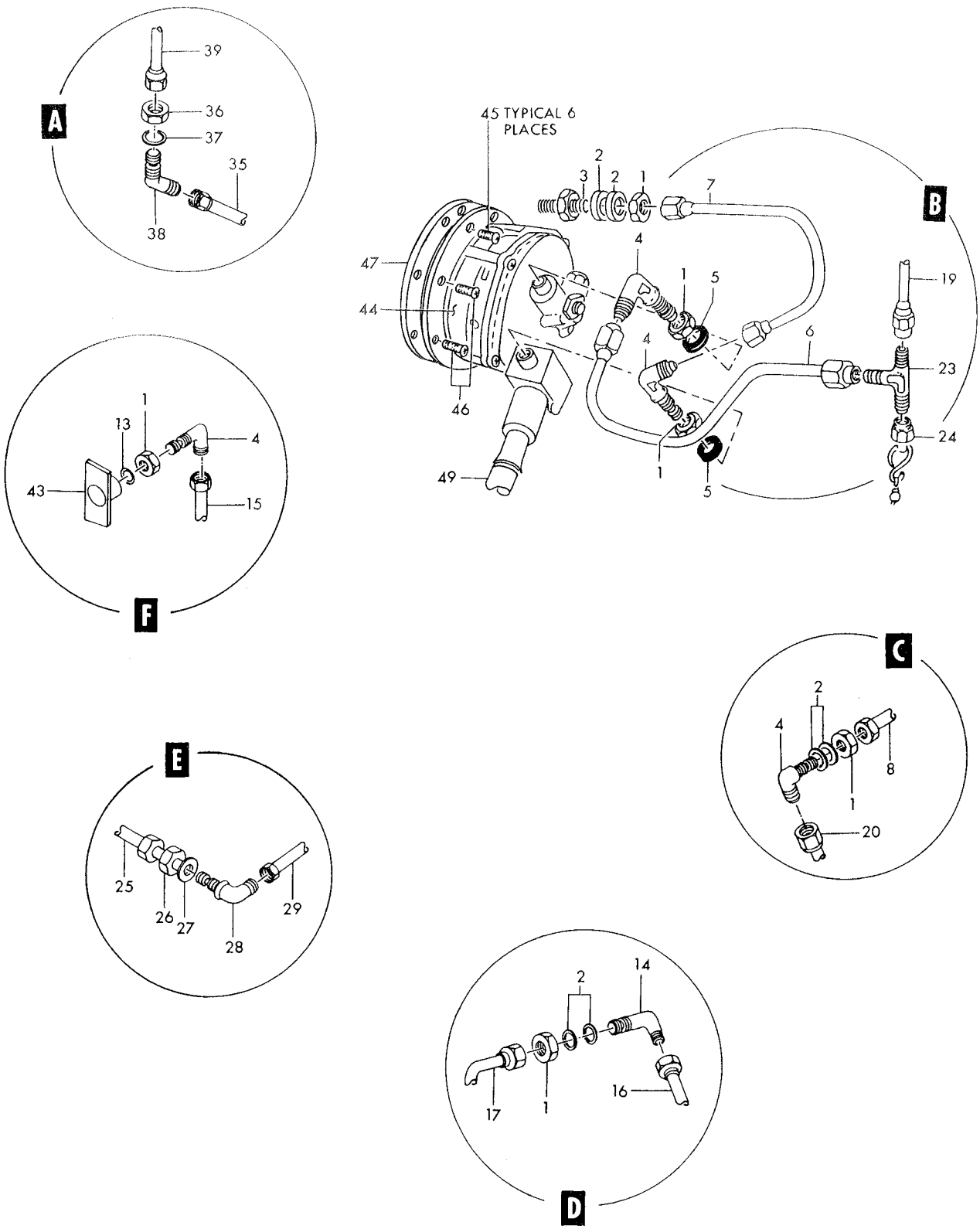

Figure 145—Cabin Air and Electronic Compartment Pressurization Piping and Equipment Fuselage Station 195 to 284 (Sheet 2 of 2)

Figura e particolare	NDR	DENOMINAZIONE	Quant.	Codice applicab.
145-44	103098-530-1	VALVE, (L7) cabin air safety (A0076) (70210) (Lockheed spec dwg 644566-5) (see T.O. 15A2-9-10-13)	1	
		Attaching Parts		
-45	AN520-10R10	SCREW (88044)	6	
-46	AN520-10R12	SCREW (88044)	2	
-47	726450-3	SEAL, cabin safety valve and pressure regulator	1	
-48	781704-53	TUBE ASSY, cabin sensing air pressure *(see fig. 137 for reqd)*	REF	
	849690-101	HARNESS ASSY, cockpit pressure dump valve to P-126 cockpit *(see fig. 160 for reqd)*	REF	
-49	CA3106ER10SL4S	CONNECTOR, (P6) plug (cockpit pressure dump valve) (71468)	1	
-50	AN815-4D	UNION (88044) *(see fig. 137 for reqd)*	REF	

A - Only for FB
B - Only for AWX

Figura e particolare	NDR	1 2 3 4 5 6 7 DENOMINAZIONE	Quant.	Codice applicab.
		CABIN AIR AND ELECTRONIC COMPARTMENT PRESSURIZATION PIPING AND EQUIPMENT FUSELAGE STATION 284 AFT		
46	784461-3	. PLUMBING INSTL, cockpit and electronic compartment pressure equipment (NHA 850168-101) *(see fig. 145 for reqd)*	REF	
1 - 1	AN815-4D	. . UNION (88044)	2	
	784461-101	A. PLUMBING INSTL, cockpit and electronic compartment pressure equipment *(see fig. 30 for reqd)*	REF	
	784461-103	B. PLUMBING INSTL, cockpit and electronic compartment pressure equipment *(see fig. 30 for reqd)*	REF	
- 2	AN6290-4	. . GASKET (88044)	2	
- 3	781704-29	. . TUBE ASSY, cabin sensing air pressure	1	
- 4	773963-47	. . TUBE ASSY, cabin sensing air pressure	1	
- 5	AN924-4D	. . NUT (88044)	1	
- 6	AN960D716	. . WASHER (88044)	1	
- 7	AN833-4D	. . ELBOW (88044)	1	
- 8	773963-49	. . TUBE ASSY, cabin sensing air pressure	1	
- 9	AN924-4D	. . NUT (88044)	1	
-10	AN960D716	. . WASHER (88044)	1	
-11	AN833-4D	. . ELBOW (88044)	1	
-12	781704-95	. . TUBE ASSY, cabin sensing air pressure *(see fig. 145)*	1	
-13	AN924-4D	. . NUT (88044)	2	
-14	AN960D716	. . WASHER (88044)	2	
-15	AN832-4D	. . UNION (88044)	1	
-16	781704-21	. . TUBE ASSY, cabin sensing air pressure	1	
-17	AN833-4D	. . ELBOW (88044)	1	
-18	781704-27	. . TUBE ASSY, cabin sensing air pressure	1	
-19	781704-101	A. . TUBE ASSY, cabin sensing pressure connection	1	
-19A	850301-101	B. . TUBE ASSY, cabin sensing connection	1	
-20	AN924-4D	. . NUT (88044)	1	
-21	AN834-4D	. . TEE (88044)	1	
-22	AN6290-4	. . GASKET (88044)	1	
-23	781704-99	. . TUBE ASSY, cabin sensing air pressure	1	
-24	768206-63	A. . TUBE ASSY, cabin sensing air pressure	1	
-24A	850301-105	B. . TUBE ASSY, cabin sensing air pressure	1	
-25	AN924-4D	. . NUT (88044)	2	
-26	AN833-4D	. . ELBOW (88044)	2	
-27	AN6290-4	. . GASKET (88044)	2	
-28	781704-25	. . TUBE ASSY, cabin sensing air pressure	1	
-29	AN824-4D	. . TEE (88044)	1	
-30	763656	A. . CHAIN ASSY, static sensing line cap	1	
	763656-101	B. . CHAIN ASSY, static sensing line cap	1	
	726306-3	. . . CAP ASSY, static sensing line	1	
	RS106-62	A. . . CHAIN ASSY (86831)	1	
	RS100	B. . . HOOK (86831)	2	
	RS109C	B. . . SWIVEL (86831)	1	
-31	AN815-4D	. . UNION (88044)	1	
-32	781704-31	. . TUBE ASSY, cabin sensing air pressure	1	
-33	AN924-4D	. . NUT (88044)	1	
-34	AN960D716	. . WASHER (88044)	1	
-35	AN833-4D	. . ELBOW (88044)	1	
-36	781704-97	A. . TUBE ASSY, cabin sensing air pressure	1	
-36A	850301-103	B. . TUBE ASSY, air pressure canopy seal	1	
-37	AN924-4D	A. . NUT (88044)	3	
-38	AN960D716	A. . WASHER (88044)	3	
-39	AN832-4D	A. . UNION (88044)	3	
-40	763152-107	A. . TUBE ASSY, cabin sensing air pressure	1	
-41	763152-105	A. . TUBE ASSY, cabin sensing air pressure	1	
-42	773963-57	A. . TUBE ASSY, cabin sensing air pressure	1	
	850300-101	A. . PLATE, reconversion	1	
-43	AN924-4D	. . NUT (88044)	3	
-44	AN960D716	. . WASHER (88044)	3	

Air Conditioning and Pressurization

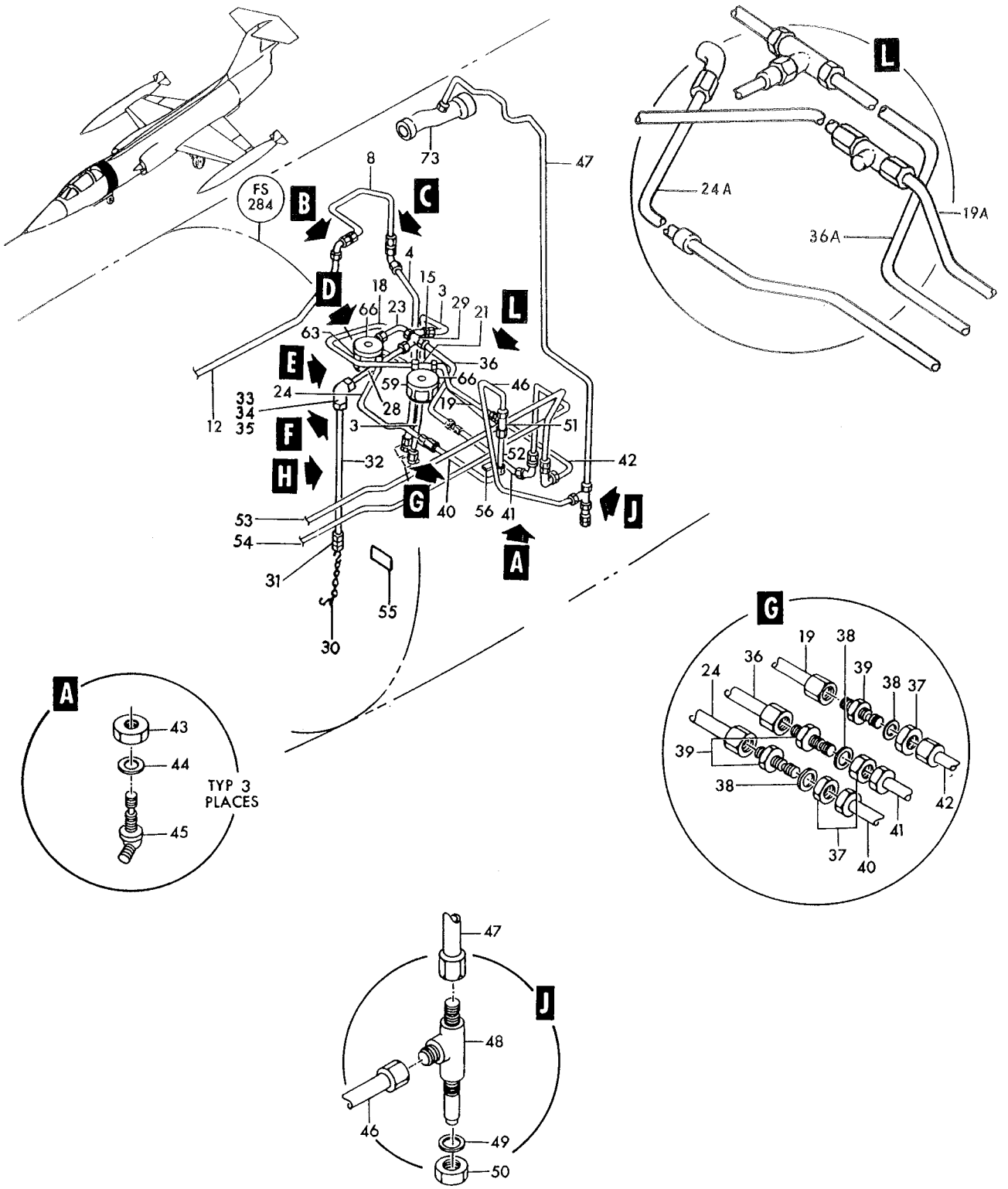

Figure 146— Cabin Air and Electronic Compartment Pressurization Piping and Equipment Fuselage Station 284 Aft (Sheet 1 of 2)

Air Conditioning and Pressurization

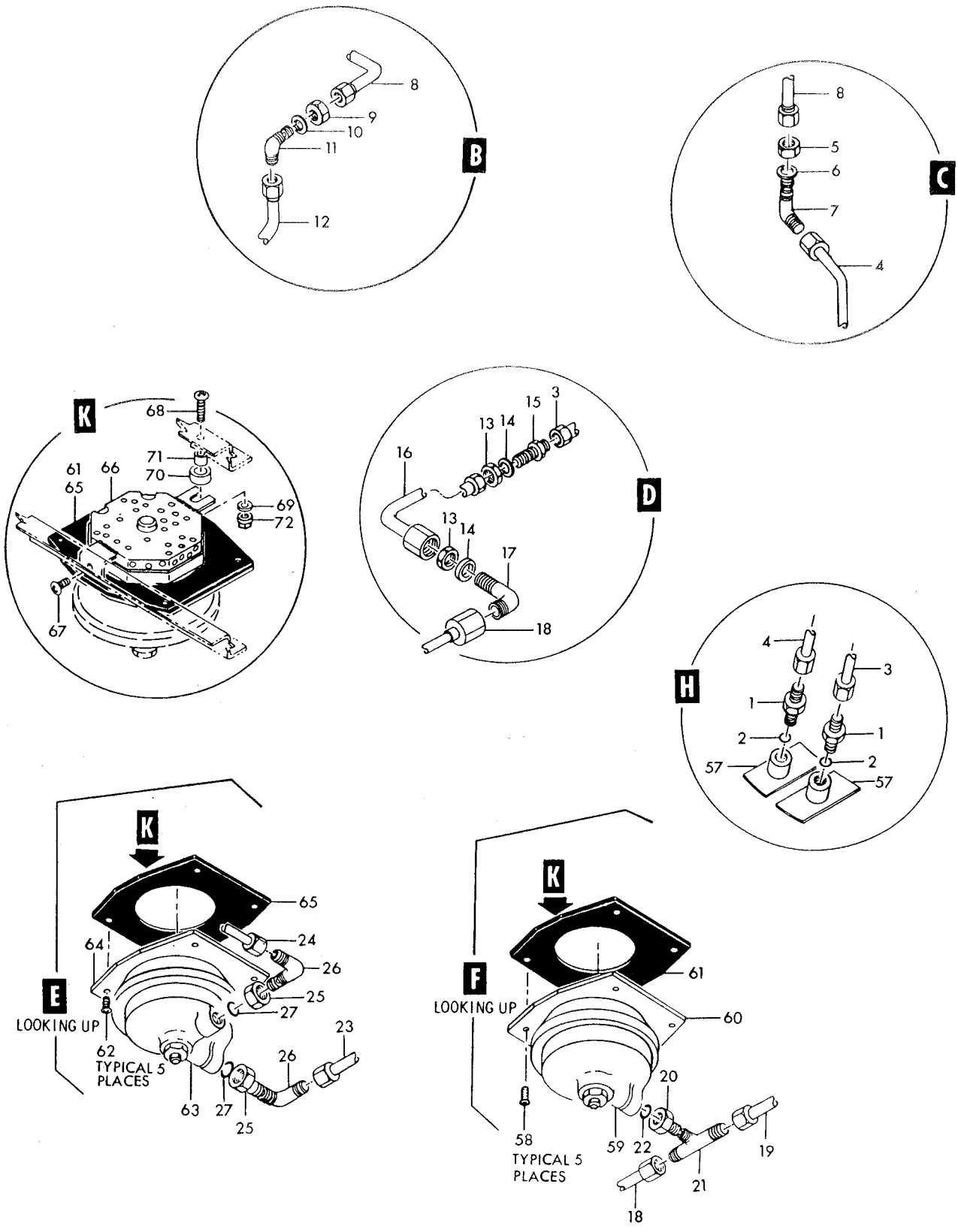

Figure 146—Cabin Air and Electronic Compartment Pressurization Piping and Equipment Fuselage Station 284 Aft (Sheet 2 of 2)

Figura e particolare	NDR	1 2 3 4 5 6 7 DENOMINAZIONE	Quant.	Codice applicab.
146-45	AN837-4D	. . ELBOW (88044)	3	
-46	781704-33	. TUBE ASSY, cabin sensing air pressure	1	
-47	785677-19	. . TUBE ASSY, cabin sensing air pressure	1	
-48	772577-1	. . PUMP ASSY, electronic compartment regulator valve jet	1	
		Attaching Parts		
-49	AN960D716	. . WASHER (88044)	1	
-50	AN924-4D	. . NUT (88044)	1	
		✲		
-51	7-1855-5	. . VALVE, manually operated shutoff plug (86768) (Lockheed spec dwg 644618-1) (see LR15-14404-217-3)	1	6701-6705
	SM2509	. . VALVE, manually operated shutoff plug (A0303) (see separate publication when available)	1	6706-
-52	763152-115	. . TUBE ASSY, cabin sensing air pressure	1	
-53	781704-35	. . TUBE ASSY, cabin sensing air pressure *(see fig. 145)*	1	
-54	781704-37	. . TUBE ASSY, cabin sensing air pressure *(see fig. 145)*	1	
-55	763579	. . NAMEPLATE, cabin safety valves sensing drain lines	1	
-56	763578	. . NAMEPLATE, cabin pressure equipment ground check shutoff valve	1	
-57	769928-1	. TUBE, flush static pressure (NHA 784461-5)	2	
	784252-1	. VALVE INSTL, electronic compartment safety *(see fig. 31 for reqd)*	REF	
	787708-1	. . VALVE ASSY, electronic compartment safety	1	
		Attaching Parts		
-58	NAS1096-3-10	. . SCREW (80205)	5	
		✲		
-59	103134-330	. . . VALVE, electronic compartment safety (A0076) (70210) (Lockheed dwg 644568-5) (see T.O. 15A2-9-13-23)	1	
-60	787708-3	. . . PLATE, electronic compartment safety valve	1	
		Attaching Parts		
	AN507-1032R10	. . . SCREW (88044)	8	
	AN960D10	. . . WASHER (88044)	8	
	MS21042L3	. . . NUT (96906)	8	
		✲		
-61	772370-1	. . SEAL, cabin safety valve and pressure regulator	1	
	784252-3	. REGULATOR INSTL, electronic compartment pressure (NHA 850168-101)	1	
	772369-501	. . REGULATOR ASSY, electronic compartment pressure	1	
		Attaching Parts		
-62	NAS1096-3-10	. . SCREW (80205)	5	
		✲		
-63	102168-1	. . . REGULATOR, electronic compartment pressure (A0076) (70210) (Lockheed spec dwg 644567-3) (see T.O. 15A1-4-13-13)	1	
-64	772369-3	. . . PLATE, electronic compartment pressure regulator	1	
		Attaching Parts		
	AN507-1032R10	. . . SCREW (88044)	8	
	AN960D10	. . . WASHER (88044)	8	
	MS21042L3	. . . NUT (96906)	8	
		✲		
-65	772370-1	. . SEAL, cabin safety valve and pressure regulator	1	
	767017-1	. COVER INSTL, cabin pressure valve and regulator *(see fig. 30 for reqd)*	REF	
-66	766983-1	. . COVER ASSY, cabin pressure valve and regulator	2	
		Attaching Parts		
-67	NAS221-9	. . SCREW (80205)	1	
-68	NAS221-12	. . SCREW (80205)	1	
-69	LS881-6	. . WASHER, plain (36659)	1	
-70	LS607-5	. . SPACER, phenolic (36659)	1	
-71	NAS43DD3-4	. . SPACER (80205)	1	
-72	MS21042L3	. . NUT (96906)	1	
		✲		
-73	850395-101	. DUCT ASSY, fus sta 305 to 310 bleed air *(see fig. 154 for reqd)*	REF	

A - Only for FB
B - Only for AWX

Figura e particolare	NDR	1	2	3	4	5	6	7	DENOMINAZIONE	Quant.	Codice applicab.
									GUN PURGE PIPING AND EQUIPMENT		
147- 1	777555-1	B.							TUBE ASSY, gun purge compartment *(see fig. 148 for reqd)*	REF	
	784719-101								DUCT INSTL, gun gas purge LH *(see fig. 30 for reqd)*	REF	
	784719-1	B.							DUCT INSTL, gun gas purge LH *(see fig. 30 for reqd)*	REF	
	777470-101								PURGE INSTL, refrigerator dump air	1	
	777470-505	B.							PURGE INSTL, refrigerator dump air	1	
- 2	773471-43	B.							TUBE ASSY, air pressure	1	
- 3	AN815-4C	B.							UNION (88044)	3	
- 4	AN837-4D	B.							ELBOW (88044)	1	
- 5	3297-402-4	B.							O RING (81400)	6	
- 6	AN924-4D	B.							NUT (88044)	4	
- 7	1338-01C1	B.							DEHYDRATOR, gun gas purge (07166) (Lockheed spec dwg 658075-7)	1	
	1338-03A	B.							DEWPOINT INDICATOR AND CARTRIDGE, dehydrator (complete with O Ring) (07166)	1	
- 8	1338-04A	B.							DEWPOINT INDICATOR, dehydrator (complete with O Ring) (07166)	1	
- 9	1338-06A	B.							CARTRIDGE, dehydrator (07166)	1	
-10	1338-13A	B.							GASKET, dehydrator (07166)	1	
-11	AN938D4	B.							TEE (88044)	1	
-12	P37-220	B.							VALVE, gun gas purge relief (91816) (Lockheed spec dwg 658074-3)	1	
-13	9R1641-1	B.							VALVE, gun gas purge restrictor (A2898) (91207) (Lockheed spec dwg 658073-1)	1	
-14	AN832-4D	B.							UNION (88044)	1	
-15	773471-39	B.							TUBE ASSY, air pressure	1	
-16	773471-41	B.							TUBE ASSY, air pressure	1	
-17	779842-1	B.							CLAMP, dehydrator air pressure tube	2	
-18	779841-1	B.							CLAMPBLOCK, dehydrator air pressure tube	2	
									Attaching Parts		
-19	NAS623-3-40	B.							SCREW (80205)	2	
-20	AN960D10	B.							WASHER (88044)	4	
-21	MS21042L3	B.							NUT (96906)	2	
									———— ✲ ————		
-22	S21904-1500	B.							HOSE, gun purge flex. (78570)	2	
-23	AN838-4D	B.							ELBOW (88044)	2	
-24	60073-3	B.							CYLINDER, gun purge actuating (09790) (Lockheed spec dwg 663292-5)	1	
									(see T.O. 9P2-3-17-73)	1	
-25	777461-1	B.							BRACKET, purge air dump cylinder	1	
									Attaching Parts		
-26	NAS623-3-3	B.							SCREW (80205)	2	
-27	NAS623-3-2	B.							SCREW (80205)	1	
									———— ✲ ————		
-28	NAS1104-18	B.							BOLT (80205)	1	
-29	AN960-416	B.							WASHER (88044)	2	
	MS24665-151	B.							COTTER PIN (96906)	2	
-30	779818-1	B.							PIN, purge air dump	2	
-31	AN960C10L	B.							WASHER (88044)	2	
-32	777455-1	B.							LEVER, purge air dump	1	
-33	777458-1	B.							BOLT, refrigerator dump air purge	1	
-34	AN960-516	B.							WASHER (88044)	2	
-35	777460-1	B.							BRACKET ASSY, purge air dump	1	
									Attaching Parts		
-36	NAS623-3-5	B.							SCREW (80205)	1	
-37	NAS623-3-4	B.							SCREW (80205)	1	
-38	NAS623-3-8	B.							SCREW (80205)	1	
									———— ✲ ————		
-39	NAS428-4-10	B.							BOLT (80205)	1	
-40	777456-1	B.							FORK, purge air dump	1	
-41	727983-1	B.							NUT, refrigerator dump air purge lock	1	
-42	777457-1	B.							TURNBUCKLE, purge air dump	1	
	777470-3								DAMPER ASSY, purge air dump	1	

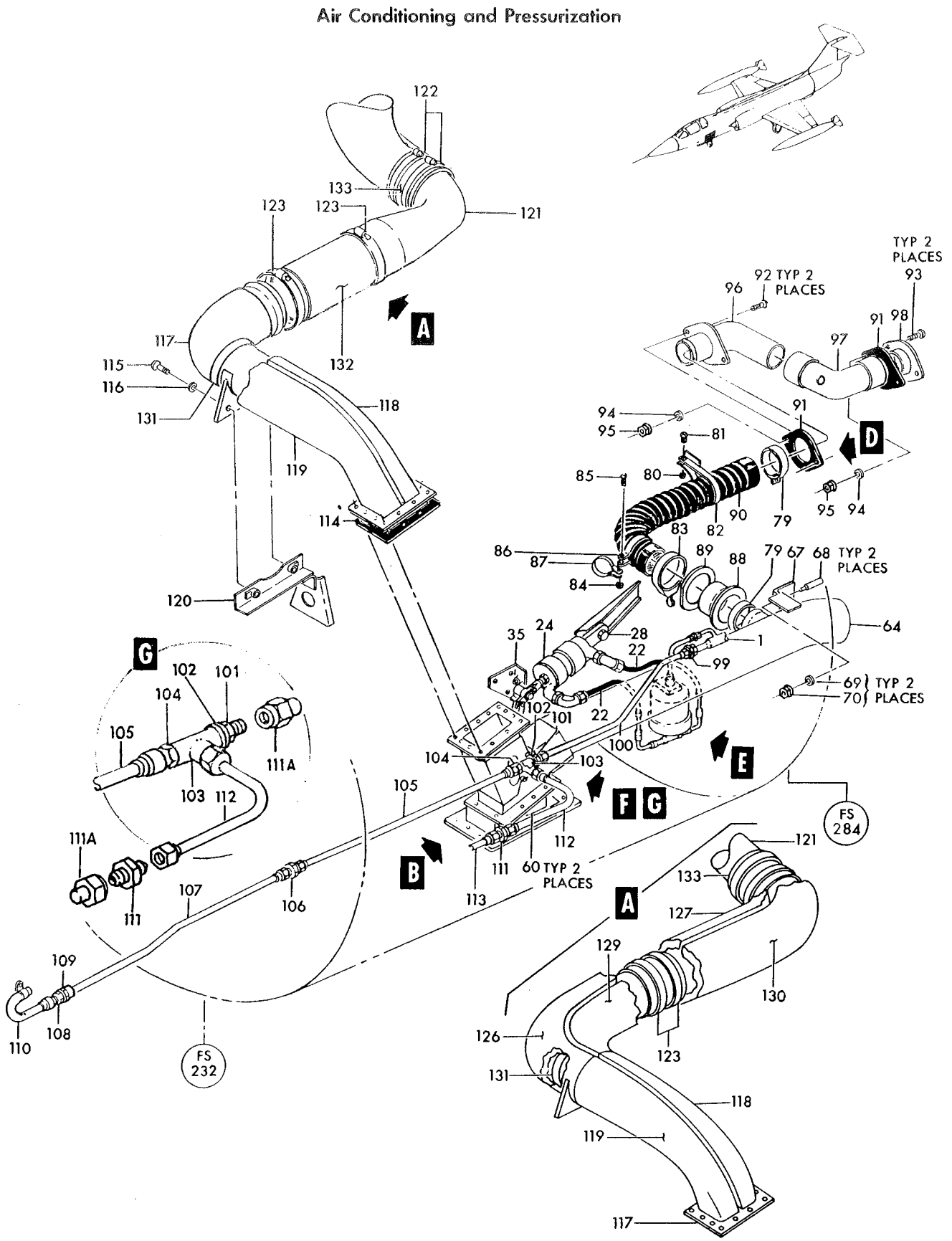

Figure 147 — Gun Purge Piping and Equipment (Sheet 1 of 2)

Air Conditioning and Pressurization

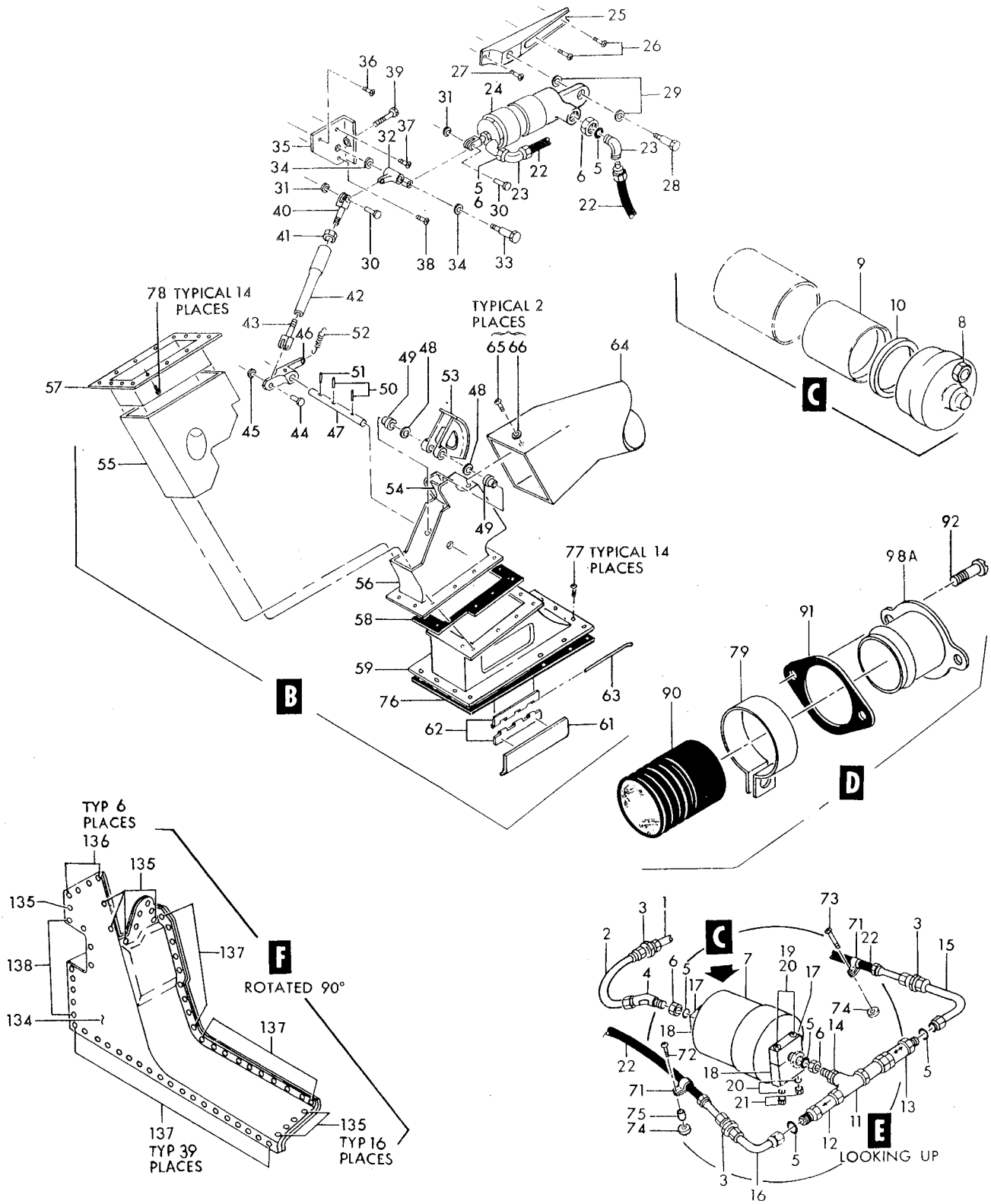

Figure 147— Gun Purge Piping and Equipment (Sheet 2 of 2)

Figura e particolare	NDR	1	2	3	4	5	6	7	DENOMINAZIONE	Quant.	Codice applicab.
147-43	777456-3								FORK, purge air dump	1	
	MS24665-451								COTTER PIN (96906)	1	
-44	779818-1								PIN, purge air dump	1	
-45	AN960C10L								WASHER (88044)	1	
-46	777454-1								LEVER, purge air dump	1	
-47	777452-3								SHAFT, purge air dump	1	
-48	304654-3								WASHER, control pulley shim	AR	
-49	LS3859F4-10								BUSHING, purge air dump damper shaft (36659)	2	
-50	NAS561P3-12								PIN (80205)	2	
-51	NAS561P3-8								PIN (80205)	1	
-52	728158-1								SPRING, purge air dump	1	
-53	777451-1								DAMPER, purge air dump	1	
-54	779817-1								STOP, refrigerator dump air purge	1	
-55	777464-1								SLEEVE ASSY, purge air dump	1	
-56	777465-1								HOUSING ASSY, purge air dump	1	
	NAS623-3-3								SCREW (80205)	6	
-57	777463-1								DUCT ASSY, purge air dump upper	1	
-58	777459-1								GASKET, purge air duct	1	
-59	777466-1								DUCT ASSY, purge air dump lower	1	
-60	777470-13								DOOR ASSY, purge air duct	2	
-61	777468-1								DOOR, purge air dump	1	
-62	777470-11								HINGE, purge air duct door half	2	
-63	777470-9								PIN, hinge	1	
-64	777467-1	B.							DUCT ASSY, purge air dump	1	
-65	NAS623-3-2	B.							SCREW (80205)	2	
-66	LS881-6	B.							WASHER, plain aluminum alloy (36659)	2	
-67	777470-7	B.							ANGLE, refrigerator dump air	1	
-68	777469-1	B.							PIN, purge duct guide	2	
-69	AN960D10	B.							WASHER (88044)	2	
-70	MS21042L3	B.							NUT (96906)	2	
-71	TA4C74S7T	B.							CLAMP, gun purge flexible hose (84971)	2	
									Attaching Parts		
-72	NAS623-3-11	B.							SCREW (80205)	1	
-73	NAS623-3-6	B.							SCREW (80205)	1	
-74	AN960D10	B.							WASHER (88044)	2	
-75	LS607-8	B.							SPACER (36659)	1	
	LS607-16	B.							SPACER (36659)	1	
	MS21042L3	B.							NUT (96906)	1	
									*		
	784694-5								BRACKET INSTL, cabin air duct *(see fig. 144)*	1	
-76	766056-1								GASKET, refrigeration exhaust air duct	1	
-77	AN520-10R8								SCREW (88044)	14	
-78	AN520-10R14								SCREW (88044)	14	
	777476-101								PURGE INSTL, gun debris compartment	1	
	777476-103	B.							PURGE INSTL, gun debris compartment	1	
-79	727385-29								CLAMP ASSY, gun purge air hose (1 only for 777476-101) *(see fig. 98)*	2	
									Attaching Parts		
	NAS221-8	B.							SCREW (80205)	1	
	MS21042L3	B.							NUT (96906)	1	
									*		
-80	MS21042L3								NUT (96906)	1	
-81	AN520-10R8								SCREW (88044)	1	
-82	747-35								CLAMP (83930)	1	
-83	AN737TW98								CLAMP (88044)	1	
-84	MS21042L3	B.							NUT (96906)	1	
-85	AN520-10R12	B.							SCREW (88044)	1	
-86	MS21919DG16	B.							CLAMP (96906)	1	
-87	MS21919DG35	B.							CLAMP (96906)	1	
-88	751220-1								BOOT ASSY, gun compartment purge	1	
-89	777558-1								BACKING, gun debris compartment boot ring	1	

Figura e particolare	NDR	1	2	3	4	5	6	7	DENOMINAZIONE	Quant.	Codice applicab.
147-90	LS4486-8C23	B.	.	.					HOSE ASSY, gun purge (36659)	1	
-91	777559-1	.	.	.					GASKET, gun debris compartment duct (1 only for 777476-101) *(see fig. 98)*	2	
-92	NAS623-3-3	.	.	.					SCREW (80205)	2	
-93	NAS623-3-4	B.	.	.					SCREW (80205)	2	
-94	AN960D10	.	.	.					WASHER (88044) (2 only for 777476-101)	4	
-95	MS21042L3	.	.	.					NUT (96906) (2 only for 777476-101)	4	
-96	777472-1	B.	.	.					TUBE ASSY, gun compartment purge	1	
-97	777474-1	B.	.	.					TUBE ASSY, gun compartment purge	1	
-98	777462-1	B.	.	.					TUBE ASSY, gun compartment purge	1	
-98A	784105-1	.	.	.					COVER, case, stowage compartment *(see fig. 98 for reqd)*	REF	
	773426-1	B.							TUBE INSTL, gun compartment purge air supply LH *(see fig. 30 for reqd)*	REF	
	773426-501	.							TUBE INSTL, gun compartment purge air supply LH *(see fig. 30 for reqd)*	REF	
-99	AN815-8C	B.	.						UNION (88044)	1	
-100	773471-1	B.	.						TUBE ASSY, gun compartment purge	1	
-101	AN924-8D	.	.						NUT (88044)	1	
-102	AN960D1216	.	.						WASHER (88044)	1	
-103	AN784D8	.	.						TEE (88044)	1	
-104	AN919-12D	.	.						REDUCER (88044)	1	
	AN6290-8	.	.						GASKET (88044)	1	
-105	773471-5	.	.						TUBE ASSY, gun purge air supply	1	
-106	AN815-6C	.	.						UNION (88044)	1	
-107	762453-77	.	.						TUBE ASSY, gun purge air supply	1	
-108	AN832-6C	.	.						UNION (88044)	1	
-109	AN924-6C	.	.						NUT (88044)	1	
-110	762453-103	.	.						TUBE ASSY, gun purge air supply	1	
-111	AN815-8C	.	.						UNION (88044)	1	
-111A	AN929-8	.	.						CAP ASSY (only for 773426-501) (88044)	2	
-112	773471-3	.	.						TUBE ASSY, gun purge air supply *(see fig. 226)*	1	
-113	773395-7	B.							TUBE, fus sta 244 to 249 *(see fig. 226 for reqd)*	REF	
	784340-1	.							DUCT INSTL, air conditioning package fan discharge *(see fig. 30 for reqd)*	REF	
-114	761496	.	.						GASKET, purging duct insulating	1	
-115	NAS623-3-4	.	.						SCREW (80205)	2	
-116	AN960D10	.	.						WASHER (88044)	2	
-117	766386-501	.	.						DUCT ASSY, fan discharge air conditioning package	1	
-118	CRF61-1046	.	.						BLANKET, sandwich type stainless steel and fiberglass (A0809) (K0510) (Lockheed spec dwg 644746-17) (alternate to 12-22036-17)	1	
	12-22036-17	.	.						BLANKET, sandwich type stainless steel and fiberglass (78741) (Lockheed spec dwg 644746-17) (alternate to CRF61-1046)	REF	
-119	CRF61-1047	.	.						BLANKET, sandwich type stainless steel and fiberglass (A0809) (K0510) (Lockheed spec dwg 644746-15) (alternate to 12-22036-15)	1	
	12-22036-15	.	.						BLANKET, sandwich type stainless steel and fiberglass (78741) (Lockheed spec dwg 644746-15) (alternate to CRF61-1047)	REF	
-120	784896-1	.	.						SUPPORT ASSY, fan discharge duct	1	
	784340-101	.							DUCT INSTL, air conditioning package fan discharge (NHA 850168-101)	1	
-121	789112-101	.	.						DUCT ASSY, fan discharge	1	
-122	QS200M56S	.	.						CLAMP, hose (08484)	2	
-123	QS300M68S	.	.						CLAMP, hose (08484)	2	
-126	CRF63-923	.	.						BLANKET, thermal insulation (A0809) (K0510) (Lockheed spec dwg 644746-101) (alternate to 12-22036-101)	1	
	12-22036-101	.	.						BLANKET, thermal insulation (78741) (Lockheed spec dwg 644746-101) (alternate to CRF63-923)	REF	
-127	CRF63-922	.	.						BLANKET, thermal insulation (A0809) (K0510) (Lockheed spec dwg 644746-105) (alternate to 12-22036-105)	1	
	12-22036-105	.	.						BLANKET, thermal insulation (78741) (Lockheed spec dwg 644746-105) (alternate to CRF63-922)	REF	
-129	CRF63-925	.	.						BLANKET, thermal insulation (A0809) (K0510) (Lockheed spec dwg 644746-103) (alternate to 12-22036-103)	1	
	12-22036-103	.	.						BLANKET, thermal insulation (78741) (Lockheed spec dwg 644746-103) (alternate to CRF63-925)	REF	

Figura e particolare	NDR	1	2	3	4	5	6	7	DENOMINAZIONE	Quant.	Codice applicab.
147-130	CRF63-924			.	.				BLANKET, thermal insulation (A0809) (K0510) (Lockheed spec dwg 644746-107) (alternate to 12-22036-107)	1	
	12-22036-107			.	.				BLANKET, thermal insulation (78741) (Lockheed spec dwg 644746-107) (alternate to CRF63-924)	REF	
-131	BRF61-1080			.	.				BLANKET, air conditioning package fan discharge (A0809) (K0510) (Lockheed spec dwg 652294-13) (alternate to 12-21928-13) . . .	1	
	12-21928-13			.	.				BLANKET, air conditioning package fan discharge (78741) (Lockheed spec dwg 652294-13)	REF	
-132	SF25-104-7			.	.				SLEEVE, air duct (16357) (Lockheed spec dwg 751377-7) (CR6116-7 (82830), AD329-7 (98891) or 5078-7 (99135) is an alternate)	1	
-133	SF25-104-5			.	.				SLEEVE, air duct (16357) (Lockheed spec dwg 751377-5) (CR6116-5 (82830), AD329-5 (98891) or 5078-5 (99135) is an alternate)	1	
	850191-105	B.							CONVERSION KIT, gun to fuel tanks *(see fig. 260 for reqd)*	REF	
-134	777801-1	A.		.					SHROUD ASSY, ram air exhaust	1	
									Attaching Parts		
-135	NAS623-3-3	A.		.					SCREW (80205)	16	
-136	NAS623-3-4	A.		.					SCREW (80205)	6	
-137	NAS623-3-5	A.		.					SCREW (80205)	39	
-138	NAS1096-3-6	A.		.					SCREW (80205)	9	
	LS881-2	A.		.					WASHER (36659)	67	
	787401-1	A.		.					COVER ASSY, insulated	1	

A - All parts marked with letter A serve also to install fuel tanks in basic aircraft in lieu of bay conversion kit (NHA 784651-1) *(see fig. 30 for reqd)*
B - Only for FB

Figura e particolare	NDR	1	2	3	4	5	6	7	DENOMINAZIONE	Quant.	Codice applicab.
									GUN PURGE DUCTS AND EQUIPMENT		
148- 1	790063-1		.						TUBE ASSY, anti-G valve inlet pressure *(see fig. 140 for reqd)*	REF	
	789594-1		.						DUCT INSTL, gun purge and anti-g valve *(see fig. 30 for reqd)*	REF	
- 2	AN924-20			.					NUT (88044)	1	
- 3	AN960D2616			.					WASHER (88044)	1	
- 4	LS1805-26			.					GASKET, annular AL-asbestos (36659)	2	
- 5	4439-20			.					RING, rigid tube connector (98159)	1	
- 7	786204-5			.					DUCT ASSY, BL 0 TO BL22L rain removal *(see fig. 139, 149 and 150)*		
- 8	4439-12			.					RING, rigid tube connector (98159)	1	
- 9	AN924-10			.					NUT (88044)	1	
-10	AN960D1416			.					WASHER (88044)	2	
-11	AN837-10			.					ELBOW (88044)	1	
-12	790784-11			.					TUBE ASSY, anti-g valve *(see fig. 140)*	1	
-13	4439-10			.					RING, rigid tube connector (98159)	1	
-14	MS21042L3			.					NUT (96906)	2	
-15	AN960-10			.					WASHER (88044)	2	
-16	NAS428-3-12			.					BOLT (80205)	2	
-17	781728-1			.					CLAMP, gun purge duct	1	
-18	781729-1			.					BLOCK, gun purge duct	1	
-19	792171-1			.					DUCT ASSY, gun purge and anti-g valve	1	
-20	792171-3			.					. TUBE, gun purge and anti-g valve	1	
-20A	792171-5			.					. TUBE, gun purge and anti-g valve	1	
	4183-10			.					. NUT (98159)	1	
	4183-12			.					. NUT (98159)	2	
-21	1600-2			.					VALVE, (L1) pneumatic solenoid (99643) (Lockheed spec dwg 644641-5) (see T.O. 9P5-5-50-23)	1	
-22	F1004-1			.					SWITCH, (S1) pneumatic pressure (09049) (98505) (Lockheed spec dwg 644747-5) (see T.O. 8S2-3-61-3)	1	
									Attaching Parts		
-23	NAS428-3-4			.					BOLT (80205)	2	
	MS21042L3			.					NUT (96906)	2	
									——————*——————		
-24	AN815-4			.					UNION (88044)	1	
-25	3297-2-4			.					PACKING (81400)	1	
-26	AN924-12			.					NUT (88044)	1	
-27	AN960D1716			.					WASHER (88044)	2	
-28	767467-1			.					DUCT ASSY, pneumatic sensing gun purge	1	
-29	767467-7			.					. DUCT, pneumatic sensing gun purge	1	
-30	AN929-12C			.					CAP (88044)	1	
-31	4439-12			.					RING, rigid tube connector (98159)	1	
	784719-1	B.							DUCT INSTL, gun gas purge LH *(see fig. 30 for reqd)*	REF	
	784719-101		.						DUCT INSTL, gun gas purge LH *(see fig. 30 for reqd)*	REF	
-32	4439-12	B.		.					RING, rigid tube connector (98159)	1	
-33	777555-1	B.		.					TUBE ASSY, gun compartment purge jet pump supply *(see fig. 147)*	1	
-34	AN834-10C	B.		.					TEE (88044)	1	
-35	AN894C10-6	B.		.					BUSHING (88044)	1	
-36	AN924-10C	B.		.					NUT (88044)	1	
-37	3297-402-10	B.		.					PACKING (81400)	1	
-38	780212-1	B.		.					TUBE ASSY, gun gas purge	1	
-39	AN815-10C	B.		.					UNION (88044)	1	
-40	S21910-0908	B.		.					HOSE ASSY, gun purge compartment (78570)	1	
-41	AN815-8C	B.		.					UNION (88044)	1	
-42	773471-33	B.		.					TUBE ASSY, gun gas purge	1	
-43	AN821-8C	B.		.					ELBOW (88044)	1	
-44	S21908-0900	B.		.					HOSE ASSY, gun purge compartment (78570)	1	
-45	AN919-15C	B.		.					REDUCER (88044)	1	6701-6778
-46	779458-101	B.		.					TUBE ASSY, gun gas purge	1	6779-
	779458-103	B.		.					TUBE ASSY, gun gas purge	1	
									Attaching Parts		
-47	AN515-8R8	B.		.					SCREW (88044)	29	

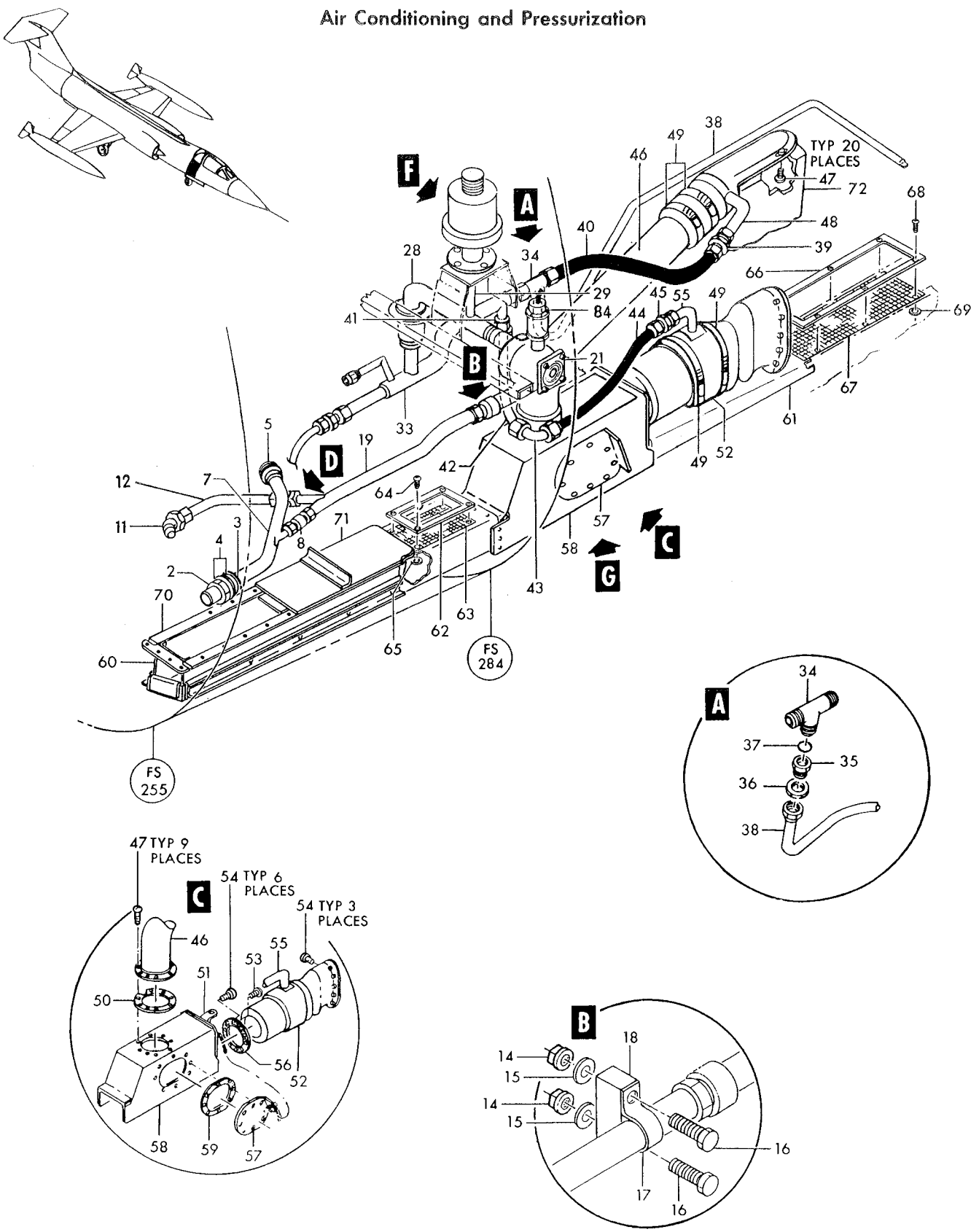

Figure 148—Gun Purge Ducts and Equipment (Sheet 1 of 2)

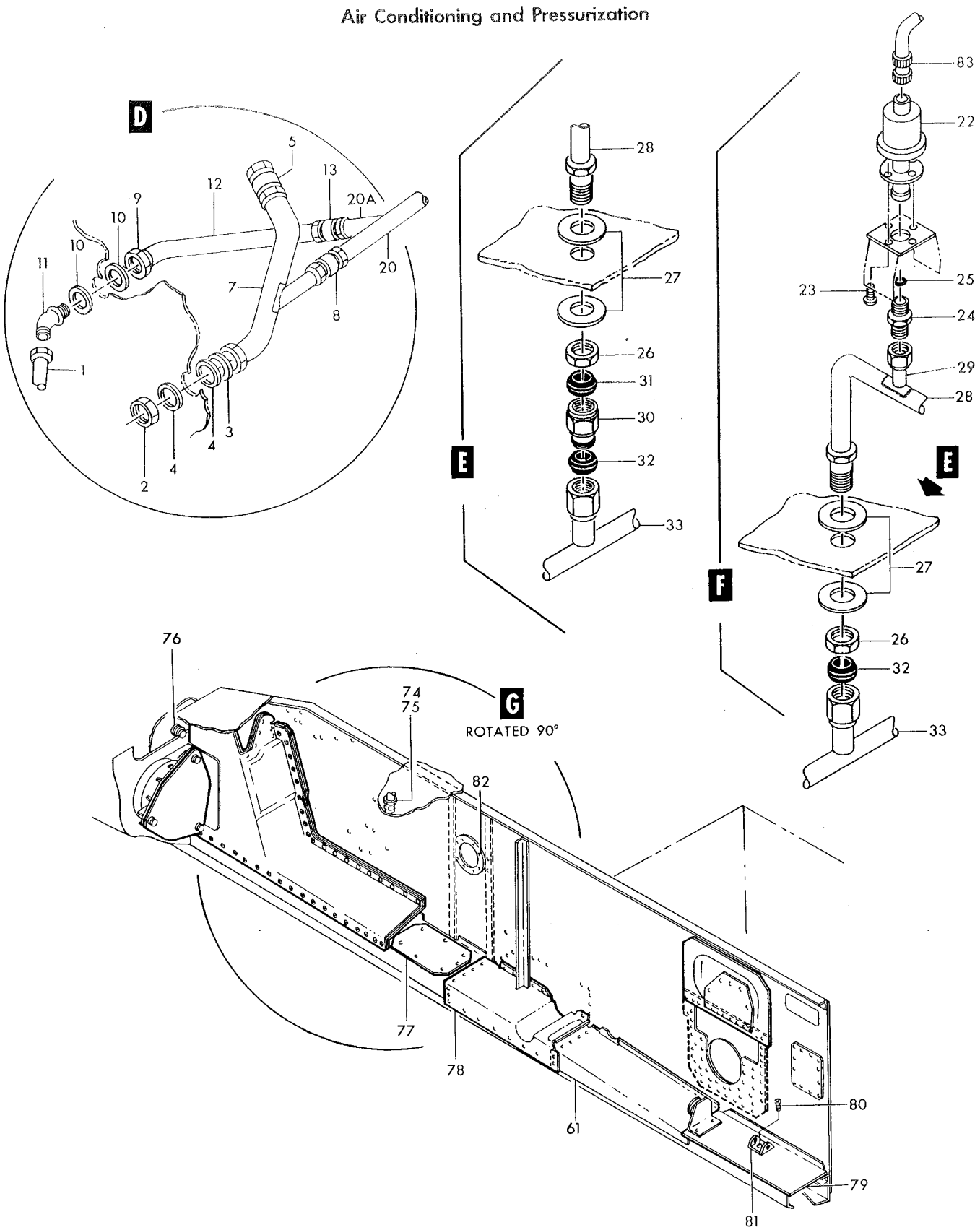

Figure 148—Gun Purge Ducts and Equipment (Sheet 2 of 2)

Figura e particolare	NDR	1 2 3 4 5 6 7 DENOMINAZIONE	Quant.	Codice applicab.
148	AN960C8	B. . WASHER (88044)	20	
	AN960D8	B. . WASHER (88044)	9	
		*		
-48	777200-1	B. . . JET ASSY, gun gas purge tube	1	
-49	QS200M56S	B. . CLAMP (08484)	4	
-50	777201-1	B. . GASKET, gun gas purge tube upper	1	
-51	AN743B12	B. . BRACKET (88044)	1	
-52	777199-1	B. . TUBE ASSY, gun gas purge	1	
		Attaching Parts		
-53	AN515-8R10	B. . SCREW (88044)	1	
-54	AN515-8R8	B. . SCREW (88044)	9	
	AN520-10R12	B. . SCREW (88044)	3	
	AN960D8	B. . WASHER (88044)	10	
	AN960D10	B. . WASHER (88044)	3	
	MS21042L3	B. . NUT (96906)	3	
		*		
-55	779672-1	B. . . JET ASSY, gun gas purge tube	1	
-56	777203-1	B. . GASKET, gun gas purge tube	1	
-57	777343-1	B. . DOOR ASSY, purge box	1	
		Attaching Parts		
	AN515-8R8	B. . SCREW (88044)	8	
	AN960D8	B. . WASHER (88044)	8	
		*		
	777343-5	B. . . CHAIN ASSY, purge box door	1	
	777343-3	B. . . DOOR, purge box	1	
	777169-101	B. PURGE INSTL, armament compartment LH *(see fig. 30 for reqd)*	REF	
	AN520-10R6	B. . SCREW (88044)	33	
	AN960D10	B. . WASHER (88044)	33	
-58	777171-101	B. . BOX ASSY, gun gas purge	1	
-59	777344-1	B. . . GASKET, gun purge tube	1	
	777169-505	. COVER INSTL, armament compartment LH *(see fig. 30 for reqd)*	REF	
	777170-501	. . COVER ASSY, armament compartment fwd	1	
-60	777170-5	. . . COVER, armament compartment fwd	1	
	778411-1	. . COVER ASSY, armament compartment aft	1	
-61	777174-1	. . . COVER, armament compartment aft	1	
	780247-1	. . COVER INSTL, armament compartment lightening hole	1	
-62	780247-3	. . . COLLAR, armament compartment lightening hole cover	1	
-63	780247-5	. . . COVER, armament compartment lightening hole	1	
		Attaching Parts		
-64	AN520-10R6	. . . SCREW (88044)	4	
-65	LS881-2	. . . WASHER, plain aluminum (36659)	4	
	MS21042L3	. . . NUT (96906)	4	
		*		
	780248-1	. . COVER INSTL, armament compartment aft	1	
-66	780248-3	. . . COLLAR, armament compartment aft cover	1	
-67	780248-5	. . . COVER, armament compartment aft	1	
		Attaching Parts		
-68	AN520-10R8	. . . SCREW (88044)	6	
-69	LS881-2	. . . WASHER, plain aluminum (36659)	6	
	MS21042L3	. . . NUT (96906)	6	
		*		
-70	766054-501	. . BOX ASSY, refrigerator exhaust air insulating	1	
-71	766054-35	. . . PLATE ASSY, refrigerator exhaust air	1	
-72	779459-3	B. SHROUD ASSY, gun gas purge compartment *(see fig. 228 for reqd)*	REF	
	850191-105	B. CONVERSION KIT, gun to fuel tanks *(see fig. 260 for reqd)*	REF	
-74	AN929-12C	A. . CAP ASSY (88044)	1	
-75	4439-12	A. . RING, rigid tube connector (98159)	1	
-76	AN929-8	A. . CAP ASSY (88044)	1	
-77	784234-3	B. . COVER, armament compartment lightening hole	1	

Figura e particolare	NDR	1	2	3	4	5	6	7	DENOMINAZIONE	Quant.	Codice applicab.
									Attaching Parts		
148	AN520-10R8	B.							SCREW (88044)	7	
	AN960D10	B.							WASHER (88044)	7	
									✲		
	778143-1	A.							COVER INSTL, LH fus sta 289 to 305 gun compartment purge box *(see fig. 30 for reqd)*	REF	
-78	778143-3	A.							COVER, fus sta 289 to 305 gun compartment purge box	1	
									Attaching Parts		
	AN520-10R6	A.							SCREW (88044)	4	
	AN520-10R8	A.							SCREW (88044)	20	
	LS4446-10	A.							WASHER (36659)	4	
	AN960D10	A.							WASHER (88044)	20	
									✲		
-79	778331-3	B.							COVER, armament compartment gun gas purge removable *(see fig. 99)*	1	
									Attaching Parts		
	NAS623-3-1	B.							SCREW (80205)	14	
	AN520-10R8	B.							SCREW (88044)	2	
	AN960D10	B.							WASHER (88044)	2	
									✲		
-80	NAS222-16	B.							SCREW (80205)	1	
-81	787376-1	B.							FITTING, lower tank support *(see fig. 99)*	1	
-82	WW230	A.							PLUG (99017)	1	
	849665-101								HARNESS ASSY, P-32 disconnect to gun purge pressure switch *(see fig. 178 for reqd)*	REF	
-83	MS25183-10SL3S								CONNECTOR, (P5) plug (gun purge pressure switch) (96906)	1	
-84	CA3106ER10SL4S								CONNECTOR, (P6) plug (gun purge valve) (71468)	1	

A - All parts marked with letter A serve also to install fuel tanks in basic aircraft in lieu of bay conversion kit
B - Only for FB

Figura e particolare	NDR		1 2 3 4 5 6 7 DENOMINAZIONE	Quant.	Codice applicab.
			RAIN REMOVAL DUCTS AND FITTINGS FUSELAGE STATION 184 TO 255		
149	761199-101		. DUCT INSTL, LH fus sta 184 to 206 rain removal *(see fig. 30 for reqd)* . .	REF	
- 1	1400-15		. . VALVE, (L8) hot air shutoff solenoid (99643) (Lockheed spec dwg 644569-7) (see T.O. 15H5-2-57-23)	1	
- 2	BRF61-1026		. . BLANKET, thermal insulation (A0809) (K0510) (Lockheed spec dwg 652316-1) (12-21956-1 and 57-039-1 is an alternate)	1	
	12-21956-1		. . BLANKET, thermal insulation (78741) (Lockheed spec dwg 652316-1) (alternate for 57-039-1 and BRF61-1026)	REF	
	57-039-1		. . BLANKET, thermal insulation (98900) (Lockheed spec dwg 652316-1) (alternate for 12-21956-1 and BRF61-1026)	REF	
- 3	BRF61-1048		. . BLANKET, thermal insulation (A0809) (K0510) (Lockheed spec dwg 652316-3) (12-21956-3 and 57-039-3 is an alternate)	1	
	12-21956-3		. . BLANKET, thermal insulation (78741) (Lockheed spec dwg 652316-3) (alternate for 57-039-3 and BRF61-1048)	REF	
	57-039-3		. . BLANKET, thermal insulation (98900) (Lockheed spec dwg 652316-3) (alternate for 12-21956-3 and BRF61-1048)	REF	
- 3A	785125-1		. . DUCT ASSY, rain removal	1	
- 4	766184-1		. . CLAMP ASSY, rain remover duct support	1	
			Attaching Parts		
- 5	NAS221-7	A.	. SCREW (80205)	2	6701-6790
	NAS1096-3-7	B.	. SCREW (80205)	2	
	AN960-10		. . WASHER (88044)	AR	
	MS21042L3		. . NUT (96906)	2	
			*		
- 6	24502-250		. . COUPLING ASSY (rain removal duct) (98625)	1	
- 7	24096-250A		. . GASKET (98625)	1	
	767101-1		. DUCT INSTL, LH fus sta 206 to 255 rain removal *(see fig. 30 for reqd)* . .	REF	
- 8	768711-1		. . DUCT ASSY, fus sta 200 to 206 rain removal *(see fig. 138)* . . .	1	
- 9	767103-1		. . DUCT ASSY, rain remover	1	
-10	767170-3		. . COLLAR, rain removal duct support	2	
			Attaching Parts		
-11	NAS221-14		. . SCREW (80205)	2	
	AN960D10		. . WASHER (88044)	2	
	MS21042L3		. . NUT (96906)	2	
			*		
-12	767323-1		. . JOINT ASSY, rain remover duct	1	
			Attaching Parts		
	NAS221-11		. . SCREW (80205)	5	
			*		
	750648-1		. . . BOOT ASSY, rain remover duct	1	
	750648-3		. . . . SLEEVE, rain remover duct	1	
	750648-5		. . . . BOOT, rain remover duct	1	
-13	320-62-188SH		. . CLAMP (98625)	1	
-14	767102-1		. . DUCT ASSY, rain remover	1	
-15	24502-125		. . COUPLING ASSY (rain removal duct) (98625)	3	
-16	17189-125C		. . GASKET (98625)	3	
-17	767105-1		. . DUCT ASSY, rain remover fus sta 225	1	
			Attaching Parts		
	NAS221-9		. . SCREW (80205)	4	
			*		
-18	761951		. . GASKET, rain remover duct	1	
-19	4439-20		. . RING, rigid tube connector (98159)	1	
-20	786204-5		. DUCT ASSY, BL 0 to BL 22L rain removal *(see fig. 148 for reqd)* . . .	REF	
	763930		. RAIN REMOVER ASSY, LH side fus sta 184 to 189 *(see fig. 202 for reqd)* .	REF	
-21	798960-101		. . HOUSING ASSY, rain remover	1	6701-6840
	798960-103		. . HOUSING ASSY, rain remover	1	6841-
-22	764254-3		. . . COVER, rain remover	1	
-23	766154-1		. . . NOZZLE, rain remover	1	
-24	768002-1		. . . HOUSING ASSY, rain remover nozzle	1	
	768001-1		. . . . STRIP, rain remover nozzle rubbing	2	
	764349		. . . HOUSING, rain remover outlet	1	

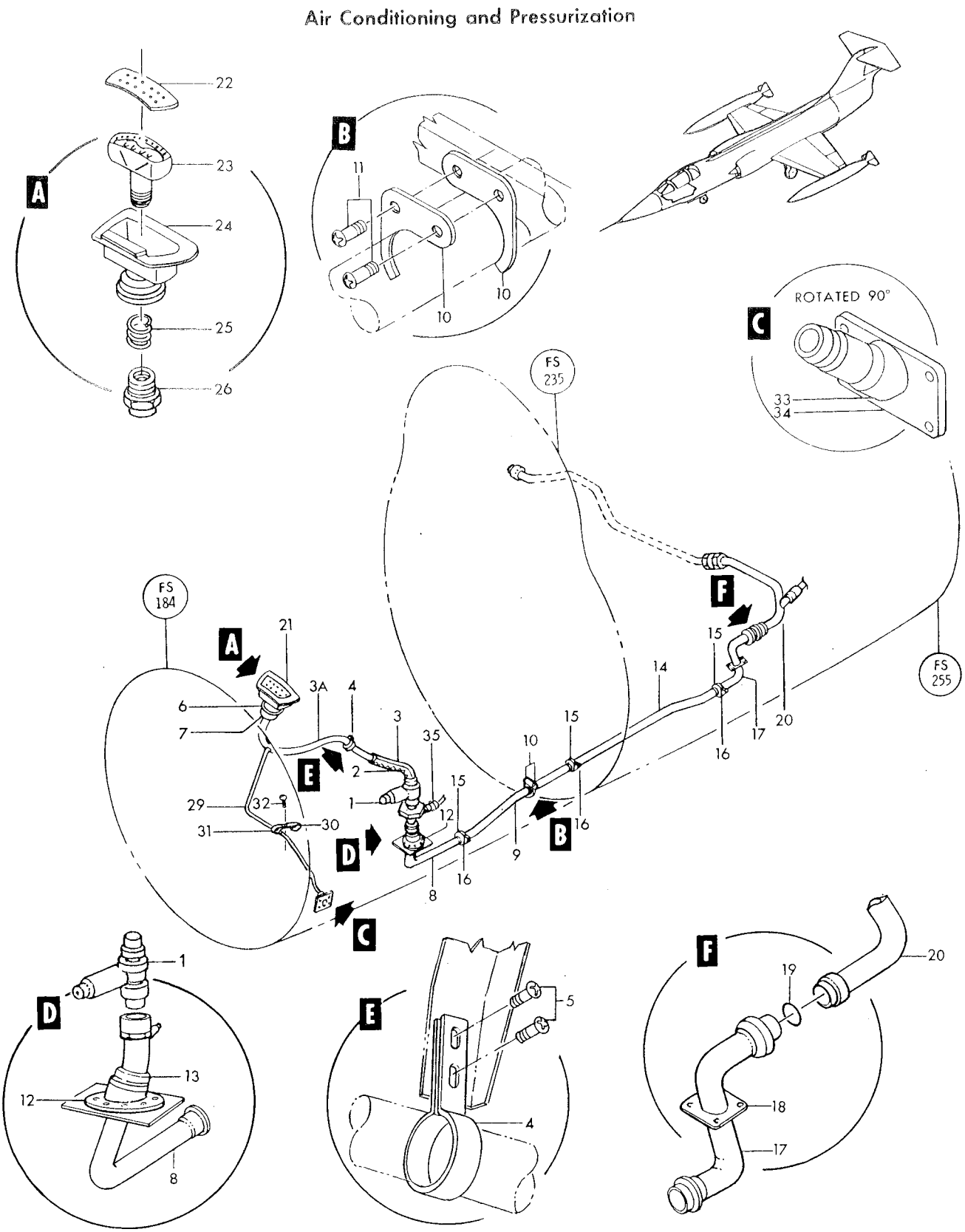

Figure 149— Rain Removal Ducts and Fittings Fuselage Station 184 to 255

Figura e particolare	NDR	DENOMINAZIONE	Quant.	Codice applicab.
149-25	726567-3	SPRING, rain remover outlet retaining	1	6701-6840
	726567-101	SPRING, rain remover outlet retaining	1	6841-
-26	798961-101	COLLAR, rain remover outlet retaining	1	
	MS24665-151	COTTER PIN (96906)	1	
	779177-1	DRAIN INSTL, rain remover duct *(see fig. 30 for reqd)*	REF	
-29	781704-65	TUBE ASSY, rain remover drain	1	
-30	MS25104H4	CLAMP (96906)	1	
-31	MS25104H6	CLAMP (96906)	1	
		Attaching Parts		
-32	NAS623-3-1	SCREW (80205)	1	
	AN960C10L	WASHER (88044)	1	
	MS21042L3	NUT (96906)	1	
	779177-3	FITTING INSTL, rain remover duct *(see fig. 36 for reqd)*	REF	
-33	728093-1	FITTING, rain remover drain duct	1	
-34	779273-1	GASKET, drain remover drain fitting	1	
	849731-101	HARNESS ASSY, cockpit nasarr *(see fig. 159 for reqd)*	REF	6701-6815
	852278-101	HARNESS ASSY, cockpit nasarr *(see fig. 159 for reqd)*	REF	6816-
-35	CA3106ER10SL4S	CONNECTOR, (P6) plug (rain remover valve) (71468)	1	

A - Removed per AA.1F-104-OT-752
B - Reqd per AA.1F-104-OT-752

Figura e particolare	NDR	DENOMINAZIONE 1 2 3 4 5 6 7	Quant.	Codice applicab.
150		RAIN REMOVAL DUCTS AND FITTINGS FUSELAGE STATION 255 TO 310		
	785334-103	. DUCT INSTL, fus sta 255 to 297 rain removal *(see fig. 30 for reqd)*	REF	
- 1	785333-101	. . DUCT ASSY, fus sta 261 to 300 rain removal	1	
- 2	767170-1	. . COLLAR, rain removal duct support	4	
		Attaching Parts		
- 3	NAS623-3-7	. . SCREW (80205)	2	
	AN960D10	. . WASHER (88044)	2	
	MS21042L3	. . NUT (96906)	2	
- 4	767170-5	. . COLLAR, rain removal duct support	2	
		Attaching Parts		
- 5	NAS623-3-7	. . SCREW (80205)	2	
	AN960D10	. . WASHER (88044)	2	
	MS21042L3	. . NUT (96906)	2	
	785334-101	. DUCT INSTL, fus sta 255 to 297 rain removal (NHA 850168-101)	1	
- 6	786203-101	. . DUCT ASSY, BL 0 to 22R rain removal *(see fig. 151)*	1	
- 7	BRF61-1031	. . BLANKET, rain remover duct thermal insulation (A0809) (K0510) (Lockheed spec dwg 652316-17) (12-21956-17 and 57-039-17 is an alternate)	1	
	12-21956-17	. . BLANKET, rain remover duct thermal insulation (78741) (Lockheed spec dwg 652316-17) (alternate for 57-039-17 and BRF61-1031)	REF	
	57-039-17	. . BLANKET, rain remover duct thermal insulation (98900) (alternate for 12-21956-17 and BRF61-1031)	REF	
- 8	BRF61-1049	. . BLANKET, rain remover duct thermal insulation (A0809) (K0510) (Lockheed spec dwg 652316-19) (12-21956-19 and 57-039-19 is an alternate)	1	
	12-21956-19	. . BLANKET, rain remover duct thermal insulation (78741) (Lockheed spec dwg 652316-19) (alternate for 57-039-19 and BRF61-1049)	REF	
	57-039-19	. . BLANKET, rain remover duct thermal insulation (98900) (alternate for 12-21956-19 and BRF61-1049)	REF	
- 9	4439-20	. . RING (98159)	1	
-10	AN960D2616	. . WASHER (88044)	1	
-11	AN742-20	. . CLAMP (88044)	1	
		Attaching Parts		
-12	NAS623-3-6	. . SCREW (80205)	1	
-13	NAS43-3-8	. . SPACER (80205)	1	
	AN960D10	. . WASHER (88044)	1	
	MS21042L3	. . NUT (96906)	1	
-14	786204-5	. DUCT ASSY, BL 0 to 22L rain remover *(see fig. 148 for reqd)*	REF	
-15	850395-101	. DUCT ASSY, fus sta 305 to 310 bleed air *(see fig. 154 for reqd)*	REF	
-16	760487-13	. TUBE ASSY, fus sta 310 to 335 bleed air *(see fig. 152 for reqd)*	REF	
-18	766600-1	. DUCT ASSY, fus sta 300 bleed air to rain removal *(see fig. 154 for reqd)*	REF	

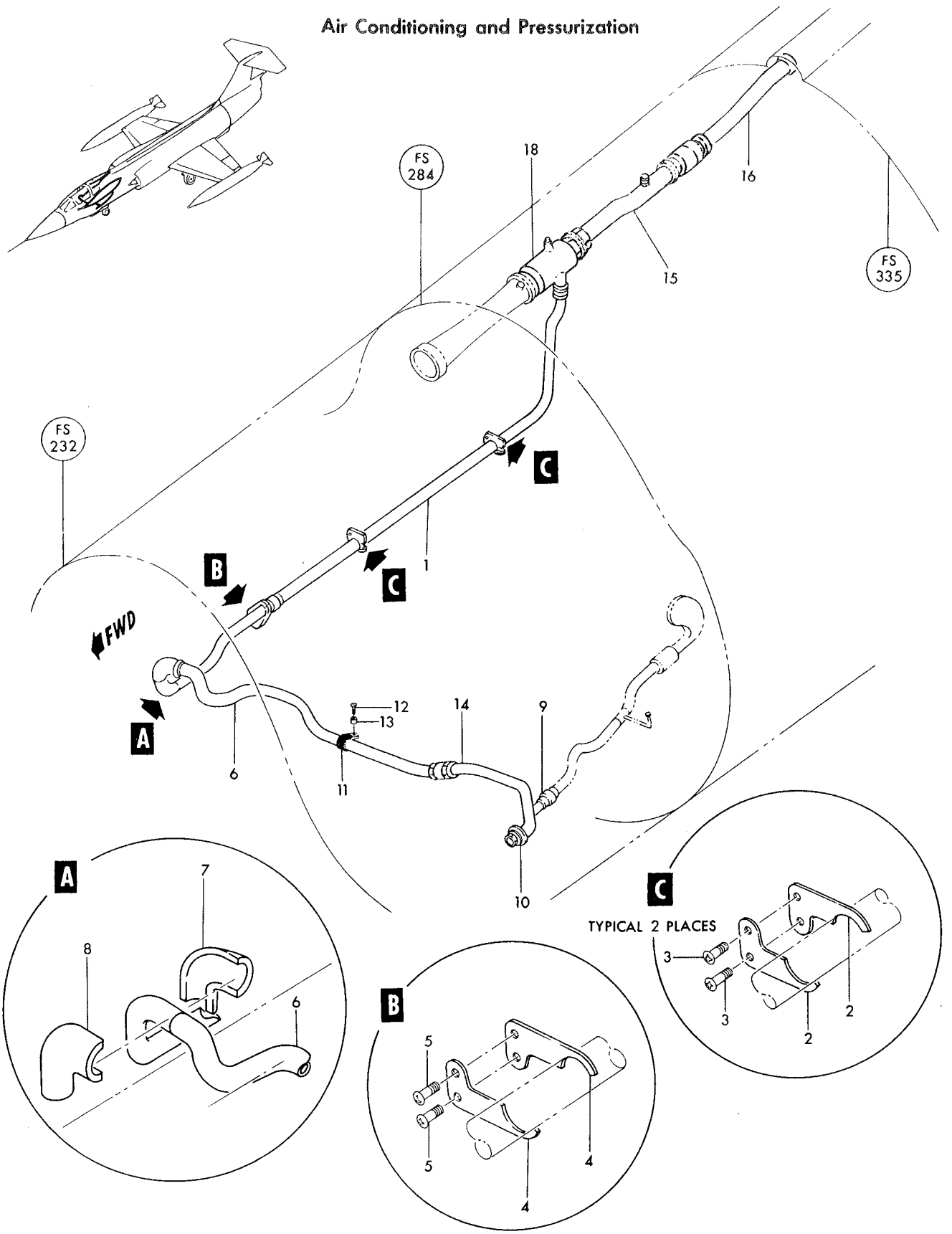

Figure 150—Rain Removal Ducts and Fittings Fuselage Station 255 to 310

Figura e particolare	NDR	DENOMINAZIONE 1 2 3 4 5 6 7	Quant.	Codice applicab.
		REFRIGERATOR RAM AIR AND COOLING DUCTS		
151	760957	DUCT INSTL, fus sta 300 to 310 RH refrigerator ram air *(see fig. 30 for reqd)*	REF	
- 1	766532-501	DUCT ASSY, refrigerator ram air	1	
		Attaching Parts		
- 2	AN520-10R10	SCREW (88044)	5	
- 3	NAS1096-3-10	SCREW (80205)	3	
	AN960-10L	WASHER (88044)	13	
	MS21042L3	NUT (96906)	5	
- 4	760961	SPACER, duct	1	
- 5	760959	DUCT ASSY, ram air connecting	1	
- 6	760960	SUPPORT, ram air duct seal	1	
- 7	766079-1	SUPPORT, ram air duct seal	1	
- 8	760959-7	SEAL, ram air duct	1	
- 9	766017-1	DUCT ASSY, refrigerator ram air	1	
-10	766039-1	GASKET, refrigerator bleed air duct	1	
-11	AN515-8R6	SCREW (88044)	2	
	AN960D8	WASHER (88044)	2	
	MS21042L08	NUT (96906)	2	
-12	766038-1	GASKET, refrigerator ram air bleed	1	
-13	768629-1	SPLITTER ASSY, bleed air duct	1	
-14	AN520-10R8	SCREW (88044)	2	
	AN960-10L	WASHER (88044)	2	
	768512-1	TUBE INSTL, bleed air duct seal *(see fig. 30 for reqd)*	REF	
-15	785677-37	TUBE ASSY, bleed air duct	1	
-16	790853-1	SCOOP ASSY, refrigerator ram air *(see fig. 46 for reqd)*	REF	
	784397-1	DUCT INSTL, electronic compartment emergency cooling (NHA 850168-101)	1	
-17	320-62-312SH	CLAMP, duct (98625)	2	
-18	751140-1	DUCT ASSY, electronic compartment emergency cooling air	1	
-19	DV307-1001	VALVE, air shutoff pneumatic (84987) (Lockheed spec dwg 644748-3) (see T.O. 9P5-5-83-3)	1	
		Attaching Parts		
-20	NAS623-3-3	SCREW (80205)	4	
	AN960D10	WASHER (88044)	4	
-21	LS4634-4	GASKET, straight thread tube fitting boss (36659) (whn exh use NAS1596-4)	1	
	NAS1596-4	PACKING (80205) (use LS4634-4 until exh)	REF	
-22	AN924-4D	NUT (88044)	1	
-23	AN804D4	TEE (88044)	1	
-24	785677-1	TUBE ASSY, shutoff valve sensing	1	
-25	750357-3	CONNECTOR, flexible	1	
-26	727385-49	CLAMP ASSY, low pressure air line	2	
		Attaching Parts		
	NAS623-3-1	SCREW (80205)	2	
	MS21042L3	NUT (96906)	2	
-27	784398-1	DUCT ASSY, electronic compartment emergency cooling *(see fig. 183 for reqd)*	REF	
	786513-3	SWITCH INSTL, auxiliary pressurization pressure (NHA 850168-101)	1	
-28	781704-115	TUBE ASSY, pressure switch sensing	1	
-29	AN833-4D	ELBOW (88044)	1	
-30	AN924-4D	NUT (88044)	1	
-31	LS4634-4	GASKET, straight thread tube fitting boss (36659) (whn exh use NAS1596-4)	1	
	NAS1596-4	PACKING (80205) (use LS4634-4 until exh)	REF	
-32	1019-1	SWITCH, (S10) pneumatic pressure (98505) (Lockheed spec dwg 644747-7) (see T.O. 8S2-3-78-3)	1	
		Attaching Parts		
-33	NAS632-3-2	SCREW (80205)	2	
	AN960D10	WASHER (88044)	2	
	MS21042L3	NUT (96906)	2	

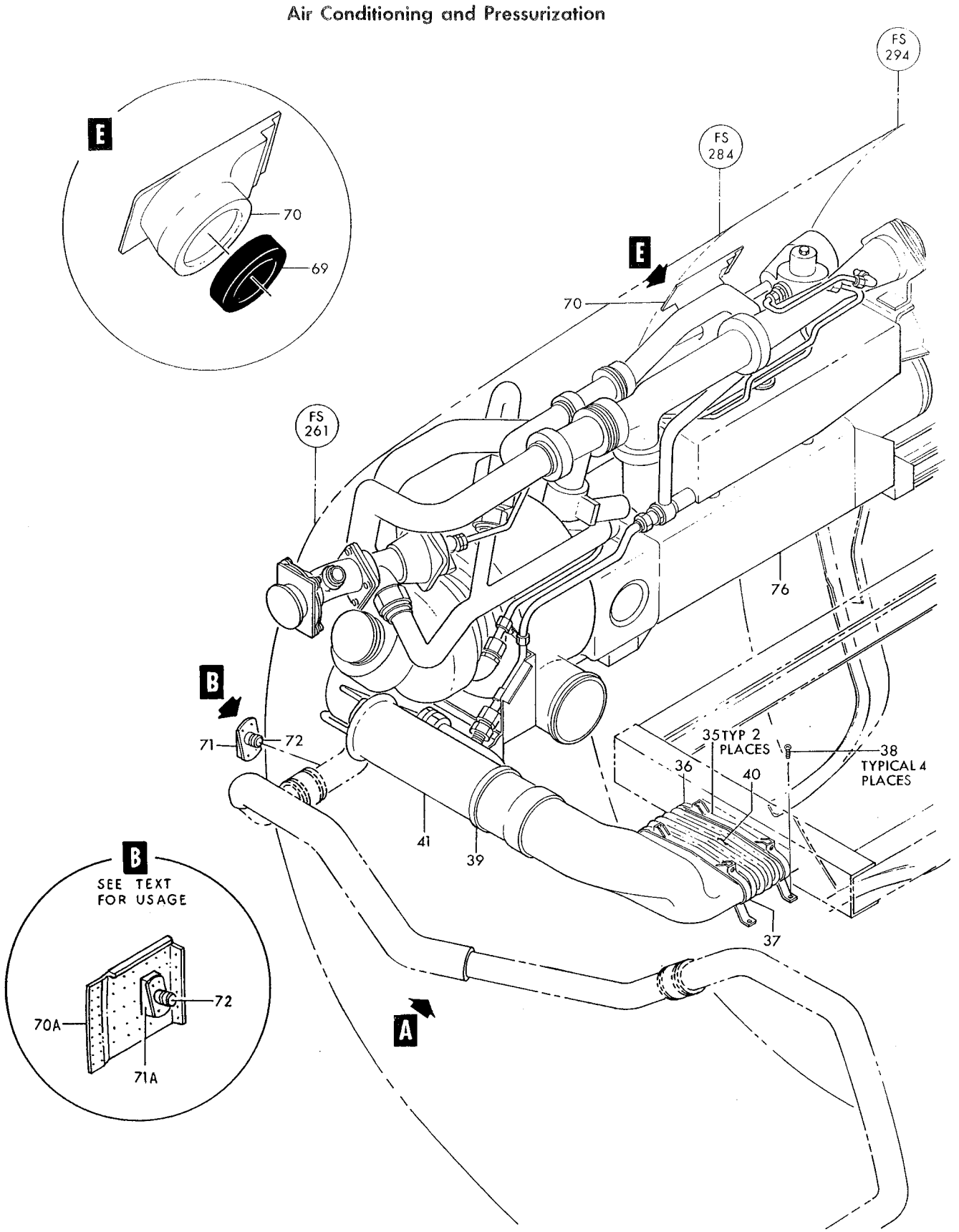

Figure 151—Refrigerator Ram Air and Cooling Ducts (Sheet 1 of 3)

Air Conditioning and Pressurization

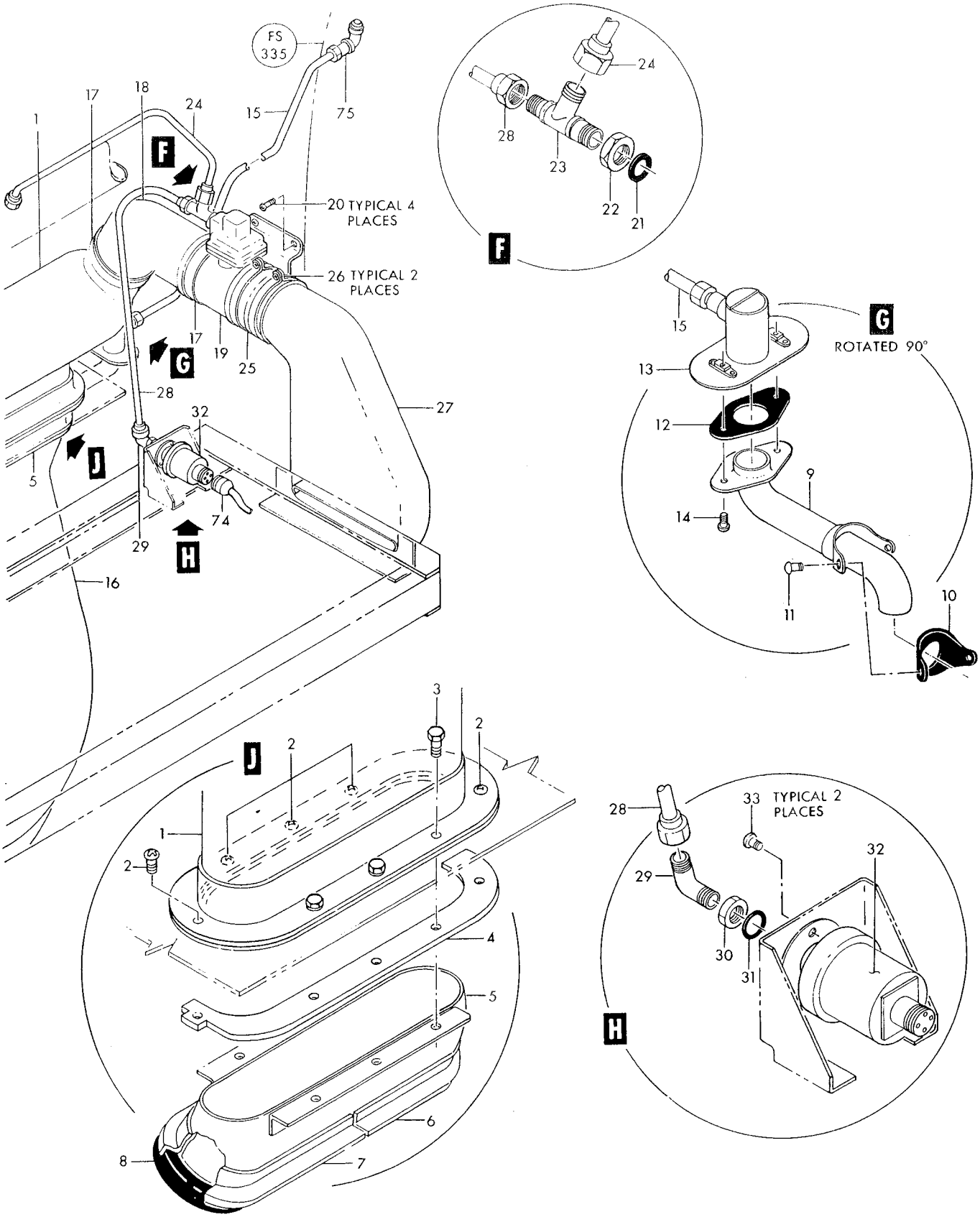

Figure 151— Refrigerator Ram Air and Cooling Ducts (Sheet 2 of 3)

Air Conditioning and Pressurization

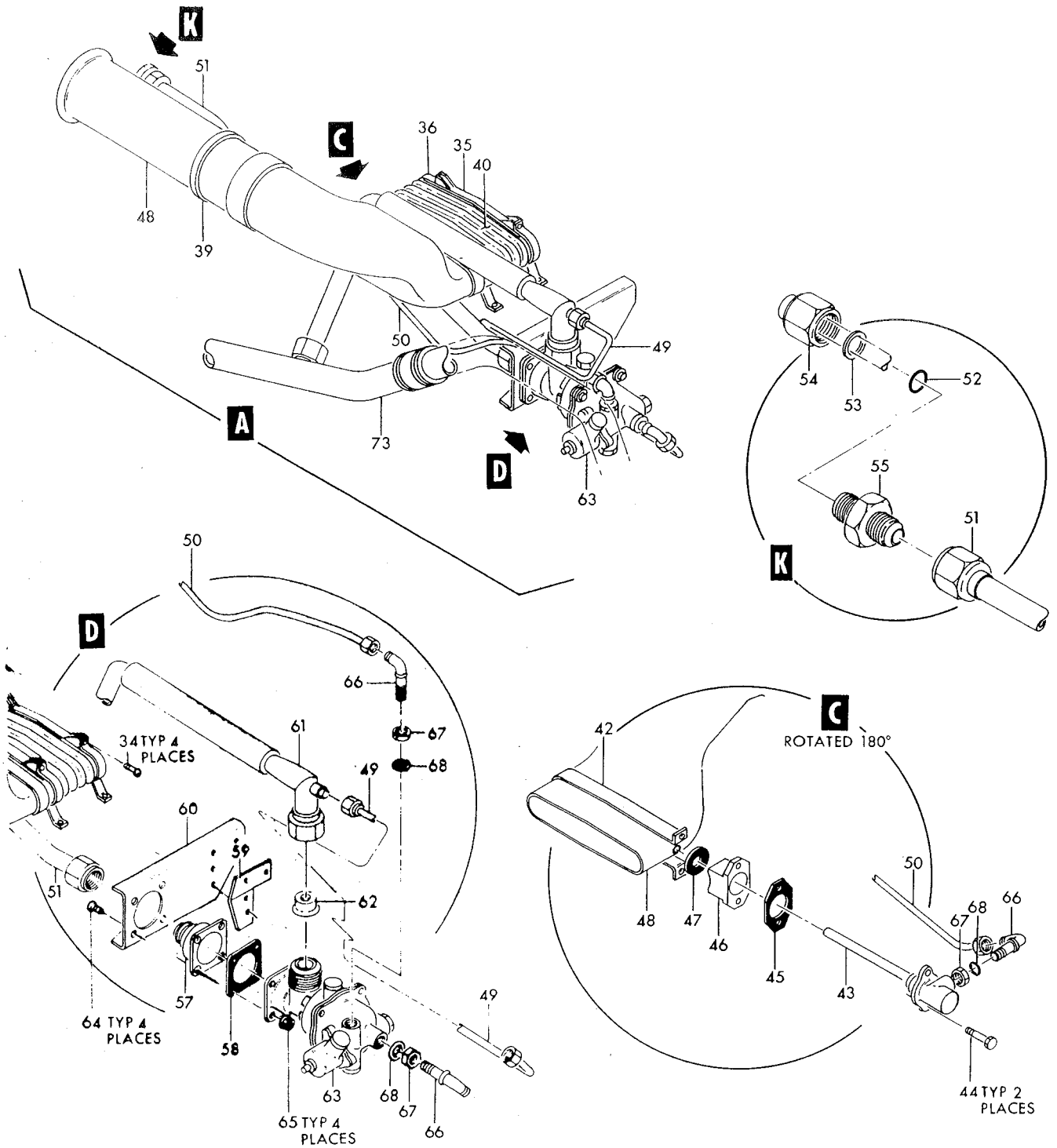

Figure 151— Refrigerator Ram Air and Cooling Ducts (Sheet 3 of 3)

Figura e particolare	NDR	DENOMINAZIONE 1 2 3 4 5 6 7	Quant.	Codice applicab.
151	784865-501	DUCT INSTL, electronic compartment (NHA 795784-105)	1	6701-6740
	784865-101	DUCT INSTL, electronic compartment (NHA 795784-105)	1	6741
-34	NAS1096-3-10	SCREW (80205)	4	
-35	788843-1	STRAP ASSY, air duct clamp	2	
-36	790987-1	STRAP ASSY, air duct clamp	1	
-37	788844-3	STRAP, air duct clamp	1	
		Attaching Parts		
-38	NAS623-3-2	SCREW (80205)	2	
	AN960D10	WASHER (88044)	4	
	MS21042L3	NUT (96906)	2	
		☼		
-39	AN737TW91	CLAMP (88044)	1	
	784865-5	DUCT ASSY, electronic compartment	1	6701-6740
	784865-103	DUCT ASSY, electronic compartment	1	6741-
-40	750686-3	DUCT, electronic compartment flexible cooling	1	
-41	795780-1	DUCT ASSY, electronic compartment cooling	1	6701-6740
	795780-101	DUCT ASSY, electronic compartment cooling	1	6741-
-42	795768-1	CLAMP ASSY, electronic compartment cooling duct	1	
-43	107890-2-1	THERMOSTAT, pneumatic (A0076) (70210) (Lockheed spec dwg 670038-1) (see T.O. 15A5-4-8-113)	1	
		Attaching Parts		
-44	NAS1096-3-20	SCREW (80205)	2	
		☼		
-45	795770-1	GASKET, electronic compartment cooling duct thermostat	1	
-46	795859-1	ADAPTER, electronic compartment cooling duct thermostat	1	
-47	795769-1	GASKET, electronic compartment cooling duct thermostat adapter	1	
-48	784864-1	DUCT ASSY, electronic compartment cooling	1	6701-6740
	784864-101	DUCT ASSY, electronic compartment cooling	1	6741-
	795784-105	MODULATED AIR SUPPLY INSTL, electronic compartment (NHA 850168-101)	1	
-49	788369-93	TUBE ASSY, pressure sensing	1	
-50	788369-97	TUBE ASSY, temperature sensing	1	
-51	788369-99	TUBE ASSY, hot air	1	
-52	MS9068-112	PACKING (96906)	1	
-53	796788-1	WASHER, back up	1	
-54	AN818-12	NUT (88044)	1	
-55	728631-1	UNION, reducer	1	
-57	795772-1	REDUCER, modulator valve	1	
-58	795773-1	GASKET, modulator valve	1	
-59	795800-101	FILLER, modulator valve support	1	
-60	795774-1	SUPPORT, modulator valve	1	
-61	795804-1	DUCT ASSY, modulator valve supply	1	
	MS20819-16	SLEEVE (96906)	1	
	AN818-16	NUT (88044)	1	
	764266	NIPPLE, radar pressurization	1	
	795804-5	TUBE, modulator valve supply duct	1	
	795804-3	TUBE, modulator valve supply duct	1	
	788369-95	TUBE ASSY, hot air	1	
	MS20819-12	SLEEVE (96906)	1	
	AN818-12	NUT (88044)	1	
-62	796575-1	RESTRICTOR, modulating valve inlet	1	
-63	122648-1-1	VALVE, modulating pneumatic (A0076) (72599) (Lockheed spec dwg 670036-1) (see T.O. 15A2-2-102-3)	1	
		Attaching Parts		
-64	NAS623-3-6	SCREW (80205)	4	
-65	MS21042L3	NUT (96906)	4	
		☼		
-66	AN833-4C	ELBOW (88044)	3	
-67	AN924-4C	NUT (88044)	3	
-68	MS28775-012	PACKING (96906)	3	
	763127	SEAL INSTL, refrigerator steam vent *(see fig. 30 for reqd)*	REF	

Figura e particolare	NDR	1 2 3 4 5 6 7 DENOMINAZIONE	Quant.	Codice applicab.
151-69	763128	. . SEAL, refrigerator steam vent	1	
-70	763129	. . FITTING, refrigerator steam vent seal	1	
	766627-1	. FITTING INSTL, overboard drain *(see fig. 30 for reqd)*	REF	6701-6840
	852409-101	. FITTING INSTL, overboard drain *(see fig. 30 for reqd)*	REF	6841-
-70A	852408-101	. . PLATE, overboard drain fitting (A0019)	1	6841-
-71	766627-3	. . SHIM, overboard drain tapered	1	6701-6840
-71A	852409-103	. . SHIM, overboard drain tapered	1	6841-
-72	726271-3	. . FITTING, 3/8 overboard drain	1	
-73	786203-101	. DUCT ASSY, BL 0 to 22R rain remover *(see fig. 150 for reqd)*	REF	
	849674-101	. HARNESS ASSY, bulkhead 255 RH P-39 disconnect to electronic compartment *(see fig. 180 for reqd)*	REF	6701-6740
	852101-101	. HARNESS ASSY, bulkhead 255 RH P-39 disconnect to electronic compartment *(see fig. 180 for reqd)*	REF	6741-
-74	MS25183-10SL3S	. . CONNECTOR, (P5) plug (bleed air pressure switch) (96906)	1	
	760163-147	. BULKHEAD INSTL, fus sta 335 LH *(see fig. 30 for reqd)*	REF	
	AN924-4D	. . NUT (88044)	2	
	AN960D716	. . WASHER (88044)	2	
-75	AN833-4D	. . ELBOW (88044)	1	
-76	682920-1-1	. PACKAGE, (E33) air conditioning (A0076) (70210) (Lockheed spec dwg 644862-11) (see T.O. 15A3-3-35-4) (For spare replacement use 682920-1-2) *(see fig. 154 for reqd)*	REF	6701-6820
	682920-1-2	. PACKAGE, (E33) air conditioning (A0076) (70210) (Lockheed spec dwg 644862-101) (see sep. T.O. whn avail.) (Spare replacement for 682920-1-1) *(see fig. 154 for reqd)*	REF	6821-

Figura e particolare	NDR	DENOMINAZIONE 1 2 3 4 5 6 7	Quant.	Codice applicab.
		DORSAL BLEED AIR DUCTS FUSELAGE STATION 310 TO 520		
152	777655-101	DUCT INSTL, dorsal bleed air *(see fig. 31 for reqd)*	REF	
- 1	770730-101	DUCT ASSY, air bleed *(see fig. 153)*	1	
- 2	777655-3	SKIN ASSY, dorsal *(see fig. 59)*	1	
	780467-1	GLAND INSTL, dorsal bleed air duct	1	
- 2A	MS21042L3	NUT (96906)	2	
- 2B	AN960-10	WASHER (88044)	2	
- 3	NAS221-14	SCREW (80205)	4	
- 4	780464-1	PLATE, duct gland	2	
- 5	780464-3	PLATE, duct gland	2	
- 6	780465-1	SEAL, dorsal bleed air duct gland	3	
- 7	780466-1	GASKET, dorsal bleed air duct	1	
- 8	770731-1	COLLAR, dorsal bleed air duct support *(see fig. 60 for reqd)*	REF	
- 9	770974-1	DUCT ASSY, dorsal bleed air *(see fig. 60 for reqd)*	REF	
-10	4439-32	RING, rigid tube connector (98159) *(see fig. 60 for reqd)*	REF	
	768224-5	DUCT INSTL, dorsal bleed air *(see fig. 60 for reqd)*	REF	
-11	760902-8	DUCT ASSY, dorsal bleed air	1	
-12	760902-16	DUCT ASSY, dorsal bleed air	1	
-13	760902-7	DUCT ASSY, dorsal bleed air	1	
-14	767094-1	COLLAR, dorsal bleed air duct support	12	
	NAS623-3-7	SCREW (80205)	12	
	768224-1	DOOR INSTL, dorsal bleed air *(see fig. 59)*	1	
	768224-3	DOOR INSTL, dorsal bleed air *(see fig. 59)*	2	
-15	4439-32	RING, rigid tube connector (98159)	1	
	760909-6	DUCT INSTL, dorsal bleed air *(see fig. 60 for reqd)*	REF	
-16	760902-6	DUCT ASSY, bleed air	1	
-17	760902-5	DUCT ASSY, bleed air	1	
-18	760902-4	DUCT ASSY, bleed air	1	
-19	767094-1	COLLAR, dorsal bleed air duct support	12	
	NAS221-14	SCREW (80205)	12	
	760909-3	DOOR INSTL, mid fus dorsal bleed air *(see fig. 60 for reqd)*	REF	
-20	4439-32	RING, rigid tube connector (98159)	1	
	774159-101	COVER INSTL, fus sta 335 to 358 auxiliary fuel tank (NHA 849141-101)	1	
-21	760902-3	DUCT ASSY, bleed air	1	
-22	4439-32	RING, rigid tube connector (98159)	1	
-23	767094-1	COLLAR, dorsal bleed air duct support	4	
	NAS623-3-7	SCREW (80205)	4	
-24	DG10F1	CAPACITOR, (C1) fuel system fixed mica (A0019) (94580) (Lockheed spec dwg 624385-1) (see T.O. 5L23-2-2)	1	
		Attaching Parts		
	AN515-6R8	SCREW (88044)	2	
	AN960D6	A. WASHER (88044)	2	6701-6770
	MS21042L06	A. NUT (96906)	2	6701-6770
		☼		
	774159-103	COVER ASSY, fus sta 335 to 358 auxiliary fuel tank *(see fig. 60)*	1	
	762061	NAMEPLATE, identification and modification	1	
	769393-5	RECEPTACLE INSTL, auxiliary fuel tank adapter and drain *(see fig. 96)*	1	
	784211-101	DUCT INSTL, fus sta 335 bleed air (NHA 850168-101)	1	
-25	784210-1	COVER ASSY, RH lower bleed air duct	1	
-26	784209-1	COVER, center lower bleed air duct	1	
-27	784208-3	COVER, upper bleed air duct	1	
-28	760325-101	DUCT ASSY, bleed air	1	
-29	768636-1	SUPPORT ASSY, bleed air duct seal	1	
		Attaching Parts		
-30	NAS623-3-1	SCREW (80205)	2	
	AN960-10L	WASHER (88044)	2	
	MS21042L3	NUT (96906)	2	
		☼		
-30A	773325-1	GASKET, bleed air duct seal	1	
-31	BRF61-1071	INSULATION BLANKET, bleed air line (A0809) (K0510) (Lockheed spec dwg 652294-9) (alternate to 12-21928-9)	1	

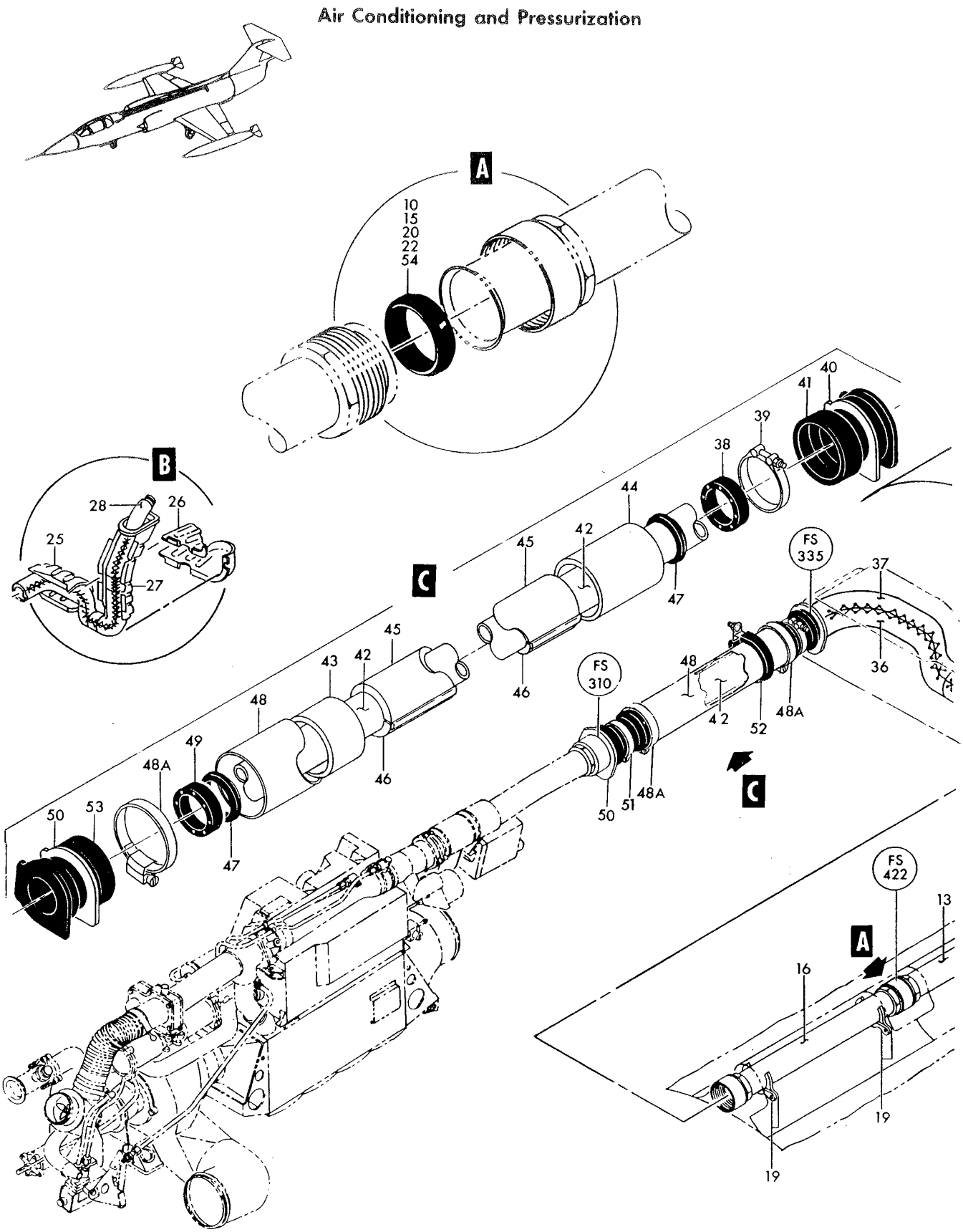

Figure 152—Dorsal Bleed Air Ducts Fuselage Station 310 to 520 (Sheet 1 of 2)

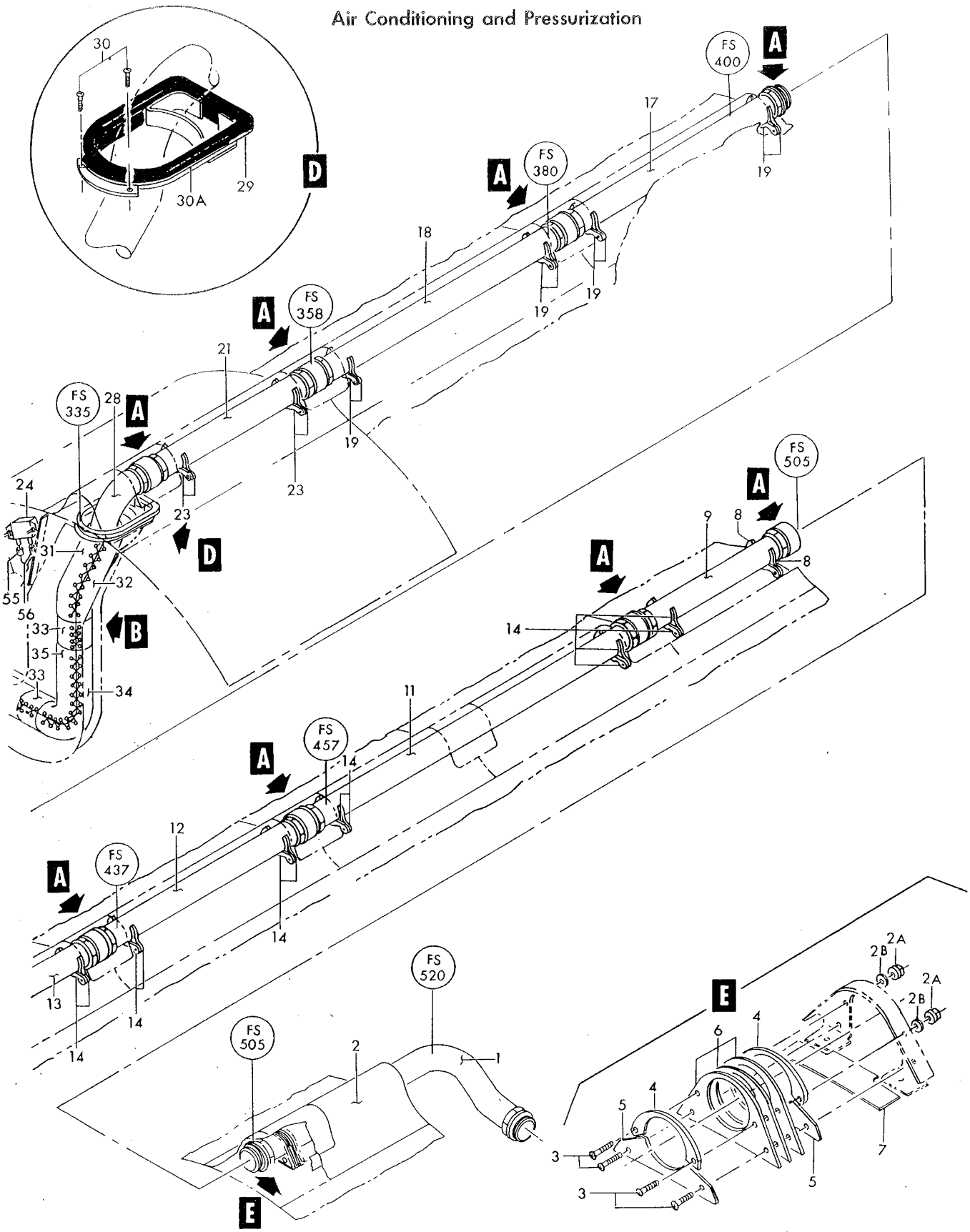

Figure 152— Dorsal Bleed Air Ducts Fuselage Station 310 to 520 (Sheet 2 of 2)

Figura e particolare	NDR	DENOMINAZIONE 1 2 3 4 5 6 7	Quant.	Codice applicab.
152	12-21928-9	. . INSULATION BLANKET, bleed air line (78741) (Lockheed spec dwg 652294-9) (alternate to BRF61-1071)	REF	
-32	BRF61-1072	. . INSULATION BLANKET, bleed air line (A0809) (K0510) (Lockheed spec dwg 652294-10) (alternate to 12-21928-10)	1	
	12-21928-10	. . INSULATION BLANKET, bleed air line (78741) (Lockheed spec dwg 652294-10) (alternate to BRF61-1072)	REF	
-33	BRF61-1080	. . INSULATION BLANKET, bleed air line (A0809) (K0510) (Lockheed spec dwg 652294-13) (alternate to 12-21928-13)	2	
	12-21928-13	. . INSULATION BLANKET, bleed air line (78741) (Lockheed spec dwg 652294-13) (alternate to BRF61-1080)	REF	
-34	BRF61-1036	. . INSULATION BLANKET, bleed air line (A0809) (K0510) (Lockheed spec dwg 652294-7) (alternate to 12-21928-7)	1	
	12-21928-7	. . INSULATION BLANKET, bleed air line (78741) (Lockheed spec dwg 652294-7) (alternate to BRF61-1036)	REF	
-35	BRF61-1050	. . INSULATION BLANKET, bleed air line (A0809) (K0510) (Lockheed spec dwg 652294-8) (alternate to 12-21928-8)	1	
	12-21928-8	. . INSULATION BLANKET, bleed air line (78741) (Lockheed spec dwg 652294-8) (alternate to BRF61-1050)	REF	
-36	BRF61-1054	. INSULATION BLANKET, bleed air line (A0809) (K0510) (Lockheed spec dwg 652294-5) (alternate to 12-21928-5)	1	
	12-21928-5	. . INSULATION BLANKET, bleed air line (78741) (Lockheed spec dwg 652294-5) (alternate to BRF61-1054)	REF	
-37	BRF61-1053	. . INSULATION BLANKET bleed air line (A0809) (K0510) (Lockheed spec dwg 652294-6) (alternate to 12-21928-6)	1	
	12-21928-6	. . INSULATION BLANKET, bleed air line (78741) (Lockheed spec dwg 652294-6) (alternate to BRF61-1053)	REF	
-38	751222-3	. . SLEEVE, bleed air duct	1	
-39	320-62-275SH	. . CLAMP, standard T-bolt band loop (98625)	1	
	768627-3	. . SEAL, bleed air duct	1	
	768627-5	. . SEAL, bleed air duct	1	
	768627-7	. . SEAL, bleed air duct	1	
	768627-9	. . SEAL, bleed air duct	1	
	784211-3	. BOOT INSTL, fus sta 335 bleed air duct *(see fig. 30 for reqd)*	REF	
-40	761779	. . COLLAR, fus sta 335 bulkhead bleed air duct	1	
-41	751222-1	. . BOOT ASSY, bleed air duct	1	
	784400-1	. DUCT INSTL, fus sta 310 to 335 bleed air (NHA 850168-101)	1	
-42	760487-13	. . TUBE ASSY, bleed air duct *(see fig. 150)*	1	
-43	BRF61-1082	. . INSULATION BLANKET, bleed air line (A0809) (K0510) (Lockheed spec dwg 652294-1) (alternate to 12-21928-1)	1	
	12-21928-1	. . INSULATION BLANKET, bleed air line (78741) (Lockheed spec dwg 652294-1) (alternate to BRF61-1082)	REF	
-44	BRF61-1081	. . INSULATION BLANKET, bleed air line (A0809) (K0510) (Lockheed spec dwg 652294-2) (alternate to 12-21928-2)	1	
	12-21928-2	. . INSULATION BLANKET, bleed air line (78741) (Lockheed spec dwg 652294-2) (alternate to BRF61-1081)	REF	
-45	BRF61-1059	. . INSULATION BLANKET, bleed air line (A0809) (K0510) (Lockheed spec dwg 652294-3) (alternate to 12-21928-3)	1	
	12-21928-3	. . INSULATION BLANKET, bleed air line (78741) (Lockheed spec dwg 652294-3) (alternate to BRF61-1059)	REF	
-46	BRF61-1060	. . INSULATION BLANKET, bleed air line (A0809) (K0510) (Lockheed spec dwg 652294-4) (alternate to 12-21928-4)	1	
	12-21928-4	. . INSULATION BLANKET, bleed air line (78741) (Lockheed spec dwg 652294-4) (alternate to BRF61-1060)	REF	
-47	4439-32	. . RING, rigid tube connector (98159)	2	
-48	778045-1	. . SHROUD, bleed air duct	1	
	777888-1	. . SUPPORT, bleed air shroud clamp	2	
-48A	QS200M56S	. . CLAMP, hose (08484)	2	
-49	750391-3	. . SLEEVE, bleed air duct	1	
-50	761779	. . COLLAR, fus sta 310 bulckhead bleed air duct	1	

Figura e particolare	NDR	1 2 3 4 5 6 7 DENOMINAZIONE	Quant.	Codice applicab.
152-51	320-62-288SH	CLAMP, standard T-bolt band loop (98625)	1	
-52	MS21919DG56	CLAMP (96906)	1	
		Attaching Parts		
	AN520-10R10	SCREW (88044)	1	
-53	751222-1	BOOT ASSY, bleed air duct	1	
-54	4439-32	RING, rigid tube connector (98159) *(see fig. 31 for reqd)*	REF	
	849545-101	HARNESS ASSY, aft quantity transmitter probe to fuel cell splice *(see fig. 193 for reqd)*	REF	
-55	1-672-1	CONNECTOR, (P95) plug (fuel quantity transmitter simulator) (95712)	1	
-56	1-690-1	CONNECTOR, (P94) plug (fuel quantity transmitter simulator) (95712)	1	

A - Removed per AA.1F-104G-OT-171

Figura e particolare	NDR	1 2 3 4 5 6 7 DENOMINAZIONE	Quant.	Codice applicab.
		ENGINE BLEED AIR DUCTS FUSELAGE STATION 520 TO 572		
153	761167-17	. ELBOW INSTL, primary heat exchanger *(see fig. 243 for reqd)*	REF	
-1	777595-1	. . ELBOW ASSY, engine bleed air	1	
		Attaching Parts		
-2	NAS1004-6A	. . BOLT (80205)	5	
-3	NAS1004-1H	. . BOLT (80205)	3	
-4	NAS1003-1	. . BOLT (80205)	2	
-5	AN960C416	. . WASHER (88044)	8	
-6	AN960C10	. . WASHER (88044)	AR	
-7	MS20500-428	. . NUT (96906)	5	
-8	MS21042L3	. . NUT (96906)	2	
		——————✲——————		
-9	NAS1104-5A	. . BOLT (80205)	2	
-10	AN960C416	. . WASHER (88044)	2	
-11	777596-1	. . SUPPORT ASSY, engine bleed air elbow	1	
	782057-1	. SUPPORT INSTL, primary heat exchanger inlet duct (NHA 849070-101)	1	
	791128-1	. . SUPPORT, heat exchanger inlet duct	1	
-12	728375-1	. . CLAMP ASSY, heat exchanger inlet duct	1	
		Attaching Parts		
-13	NAS1003-8A	. . BOLT (80205)	2	
-14	NAS1003-2A	. . BOLT (80205)	1	
	NAS43HT3-10	. . SPACER (80205)	2	
	NAS43HT3-24	. . SPACER (80205)	1	
	MS20500-1032	. . NUT (96906)	3	
		——————✲——————		
	728375-3	. . . CLAMP, heat exchanger inlet duct	1	
	750532-4	. . . DECAL, high temperature disconnect	1	
	850664-103	. DUCT INSTL, primary heat exchanger (NHA 849140-101)	1	
-15	401T100-9	. . VALVE, (L31) motor actuated hot air (A2898) (98889) Lockheed spec dwg 644611-5) (see T.O.15A2-2-65-3)	1	
-16	LS9336-7	. . GASKET (36659)	2	
-17	18801A200	A. . COUPLING, duct (98625)	3	
-18	771243-501	. . DUCT ASSY, fwd engine bleed air	1	
-19	10235-5	. . . BELLOWS ASSY, tension tie rod (A0614) (70628) (Lockheed spec dwg 632159-3)	1	
	765090-3	. . . ELBOW ASSY, FWD engine bleed air	1	
	765090-6	. . . DUCT, FWD engine bleed air	1	
-20	17189-200C	. . GASKET, duct coupling (98625)	1	
-21	775510-1	. . CLAMP ASSY, engine compt bleed line duct	1	
-22	MS21254-3RS	EYE (96906)	1	
-23	MS21251B3S	BODY, turnbuckle (96906)	1	
		Attaching Parts		
-24	NAS1003-6A	. . BOLT (80205)	1	
-25	MS21043-3	. . NUT (96906)	1	
		——————✲——————		
	850664-101	. HEAT EXCHANGER INSTL, primary *(see fig. 31 for reqd)*	REF	
-26	8221C	. . COOLER BLEED, air primary (78385) (Lockheed spec dwg 644759-5) (see 15A4-42-3) *(see fig. 113)*	1	
		Attaching Parts		
	NAS623-4-5	. . SCREW (80205)	4	
	AN960-416	. . WASHER (88044)	4	
		——————✲——————		
-27	850655-101	. . DUCT ASSY, primary heat exchanger	2	
		Attaching Parts		
-28	NAS623-3-2	. . SCREW (80205)	2	
-29	AN960C10L	. . WASHER (88044)	2	
-30	MS21043-3	. . NUT (96906)	2	
		——————✲——————		
-31	850325-101	. . OUTLET ASSY, primary heat exchanger	1	
-32	850325-103	. . OUTLET ASSY, primary heat exchanger	1	
-33	775511-1	. . BRACKET ASSY, bleed air line duct	1	

Air Conditioning and Pressurization

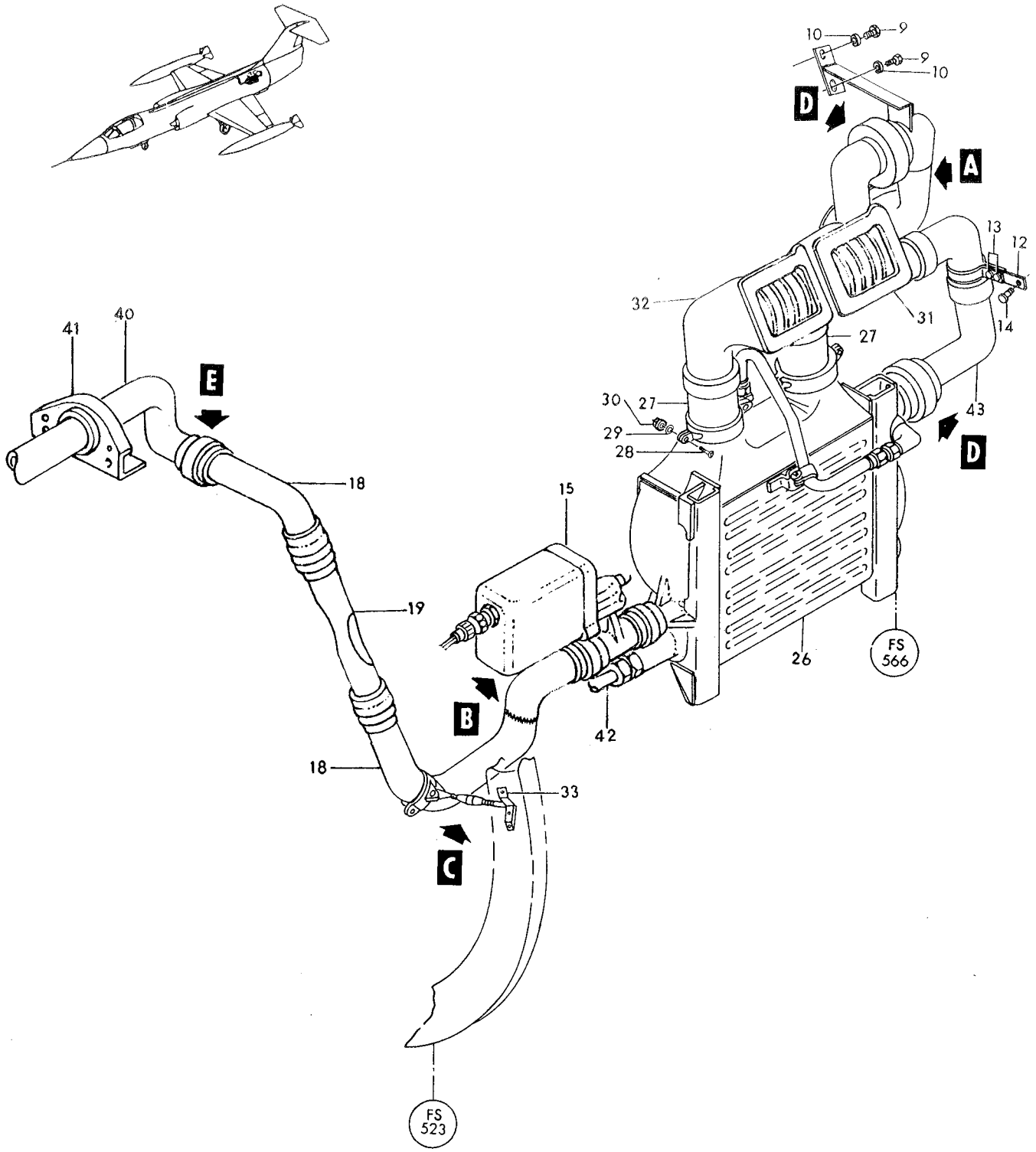

P56-14-404

Figure 153— Engine Bleed Air Ducts Fuselage Station 520 to 572 (Sheet 1 of 2)

Air Conditioning and Pressurization

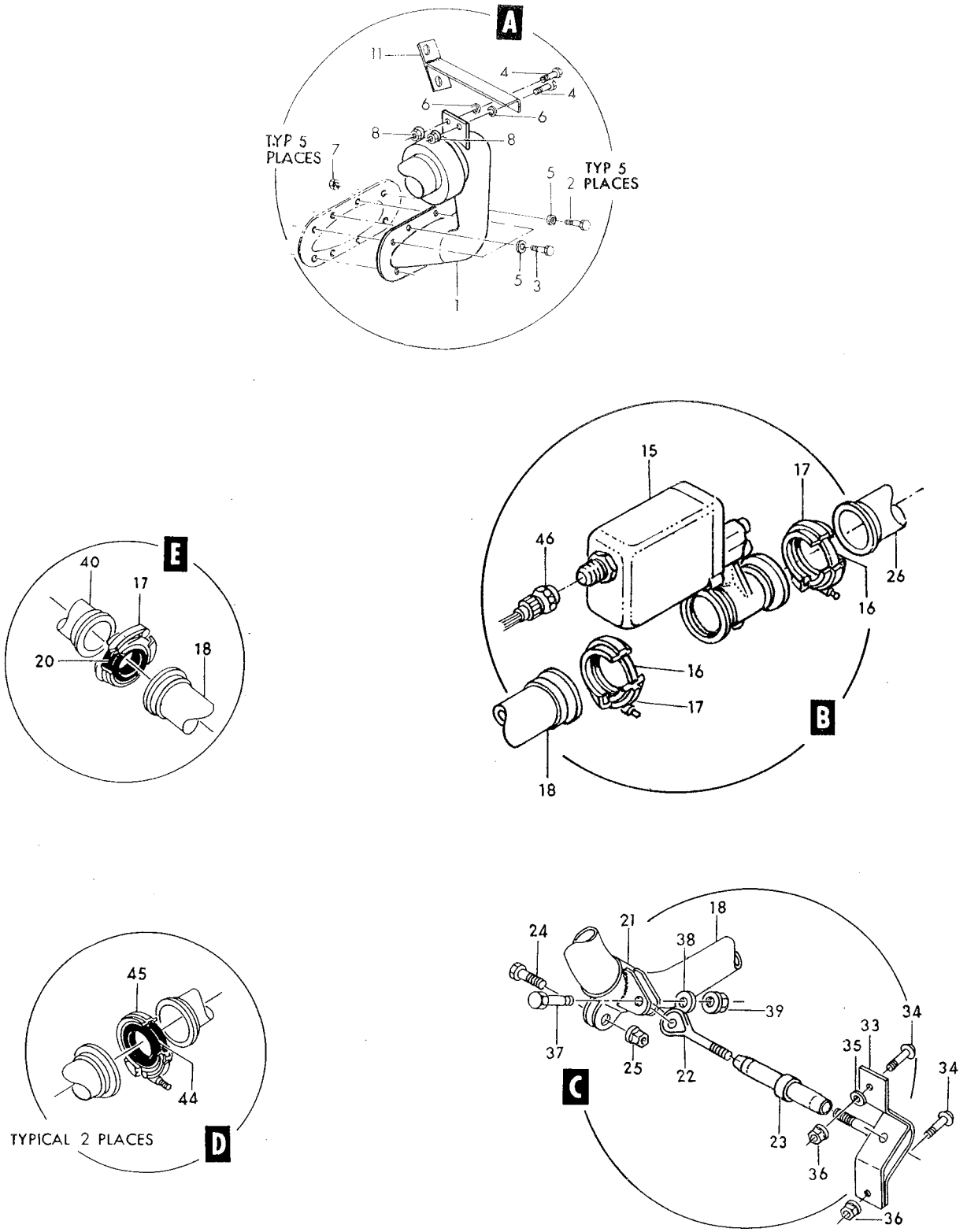

Figure 153— Engine Bleed Air Ducts Fuselage Station 520 to 572 (Sheet 2 of 2)

Figura e particolare	NDR	1	2	3	4	5	6	7	DENOMINAZIONE	Quant.	Codice applicab.
									Attaching Parts		
153-34	NAS623-3-3								SCREW (80205)	2	
-35	AN960C10								WASHER (88044)	1	
-36	MS21043-3								NUT (96906)	2	
-37	NAS1003-6A								BOLT (80205)	1	
-38	AN960C10L								WASHER (88044)	1	
-39	MS21043-3								NUT (96906)	1	
-40	770730-101								DUCT ASSY, air bleed *(see fig. 152 for reqd)*	REF	
-41	761076								BULKHEAD ASSY, fus sta 520 dorsal	1	
-42	774152-93								TUBE ASSY, air pressure *(see fig. 113 for reqd)*	REF	
	773505-101								DUCT INTL, primary heat exchanger (NHA 849071-101)	1	
-43	10454-9								BELLOWS ASSY, tension tie rod (A0614) (70628) (Lockheed spec dwg 644801-9)	1	
-44	17189-200C								GASKET, duct coupling (98625)	2	
-45	764624-101	B.							CLAMP ASSY, high temperature disconnect	2	
	18801A200	B.							COUPLING, duct (98625)	1	
	750532-4	B.							DECAL, high temperature disconnect	1	
	849549-101								HARNESS ASSY, P-123 and P-124 plug to LH engine compt. *(see fig. 192 for reqd)*	REF	
-46	CA06KE14S5S								CONNECTOR, (P457) plug (hot air shutoff valve) (71468)	1	

A - Reqd per AA.1F-104S-OT-102A.
B - Reqd per AA.1F-104-OT-699.

Figura e particolare	NDR	DENOMINAZIONE 1 2 3 4 5 6 7	Quant.	Codice applicab.
		AIR CONDITIONING PACKAGE		
154	784399-101	. AIR CONDITIONING PACKAGE INSTL, fus sta 261 to 310 (NHA 850168-101)	1	
- 1	850395-101	. . DUCT ASSY, fus sta 305 to 310 bleed air *(see fig. 146 and 150)* . .	1	
- 2	766600-1	. . DUCT ASSY, fus sta 300 bleed air to rain removal *(see fig. 150)* . .	1	
- 3	LS9336-7	. . GASKET, high temperature (36659)	2	
- 4	N4304SS4-200	. . COUPLING ASSY, quick disconnect (94581)	2	
- 5	12-21928-105	. . BLANKET, bleed air line insulation (78741) (Lockheed spec dwg 652294-105)	1	
- 6	12-21928-107	. . BLANKET, bleed air line insulation (78741) (Lockheed spec dwg 652294-107)	1	
- 7	BRF61-1078	. . BLANKET, bleed air line insulation (A0809) (K0510) (Lockheed spec dwg 652294-23) (alternate to 12-21928-23)	1	
	12-21928-23	. . BLANKET, bleed air line insulation (78741) (Lockheed spec dwg 652294-23) (alternate to BRF61-1078)	REF	
- 9	4695-3	. . DUCT, mixing chamber to water separator flexible air (99135) (Lockheed spec dwg 751139-3) *(see fig. 144)*	1	
-10	320-62-262SH	. . CLAMP, T-bolt (98625)	2	
-11	726461-3	. . GASKET, defogging duct coupling	1	
-12	4345-225SH	. . COUPLING (98625)	1	
-14	682920-1-1	. . PACKAGE, (E33) air conditioning (A0076) (70210) (Lockheed spec dwg 644862-11) (see T.O. 15A3-3-35-4) (For spare replacement use 682920-1-2) *(see fig. 141, 143, 151 and 155)*	1	6701-6820
	682920-1-2	. . PACKAGE, (E33) air conditioning (A0076) (70210) (Lockheed spec dwg 644862-101) (see sep. T.O. whn avail.) (Spare replacement for 682920-1-1) *(see fig. 141, 143, 151 and 155)*	1	6821-
		Attaching Parts		
-15	NAS428-4-4	. . BOLT (80205)	3	
-16	548160-1	. . CONTROLLER, (E1) temperature (A0076) (70210) (Lockheed spec dwg 644880-3) (see T.O. 15A8-5-24-4) *(see fig. 155)*	1	
		Attaching Parts		
-17	NAS623-3-3	. . SCREW (80205)	4	
-18	MS21042L3	. . NUT (96906)	2	
-19	4439-20	. . RING (98159)	1	
-20	LS1611-18-16	. . HOSE, flexible air duct (36659)	1	
-21	QS300M68S	. . CLAMP, hose (08484)	2	
-23	785677-3	. . TUBE ASSY, refrigerator boiler drain	1	
	849900-103	. . ELECTRICAL INSTL, refrigerator wiring harness	1	
	849675-101	. . . HARNESS ASSY, P-129 receptacle to temperature control valve (cold)	1	
-24	MS25183-14S5S	. . . . CONNECTOR, (P18) plug (temperature control valve) (96906) .	1	
-25	DM9606-7P004	. . . . CONNECTOR, (J9) receptacle (P-129 disconnect) (17419) . .	1	
-26	MS20392-2C17	. . PIN (96906)	1	
	MS24665-132	. . COTTER PIN (96906)	1	
	849674-101	. HARNESS ASSY, bulkhead 255 RH P-39 disconnect to electronic compartment *(see fig. 180 for reqd)*	REF	6701-6740
	852101-101	. HARNESS ASSY, bulkhead 255 RH P-39 disconnect to electronic compartment *(see fig. 180 for reqd)*	REF	6741-
-27	MS3116P12-10S	. . CONNECTOR, (P23) plug (temperature controller) (96906)	1	
-28	MS25183-14S7S	. . CONNECTOR, (P36) plug (altitude pressure switch) (96906) . . .	1	
-29	MS3116P8-3S	. . CONNECTOR, (P203) plug (temperature controller) (96906)	1	
-30	MS25183-14S5S	. . CONNECTOR, (P18) plug (temperature control valves) (96906) . . .	1	

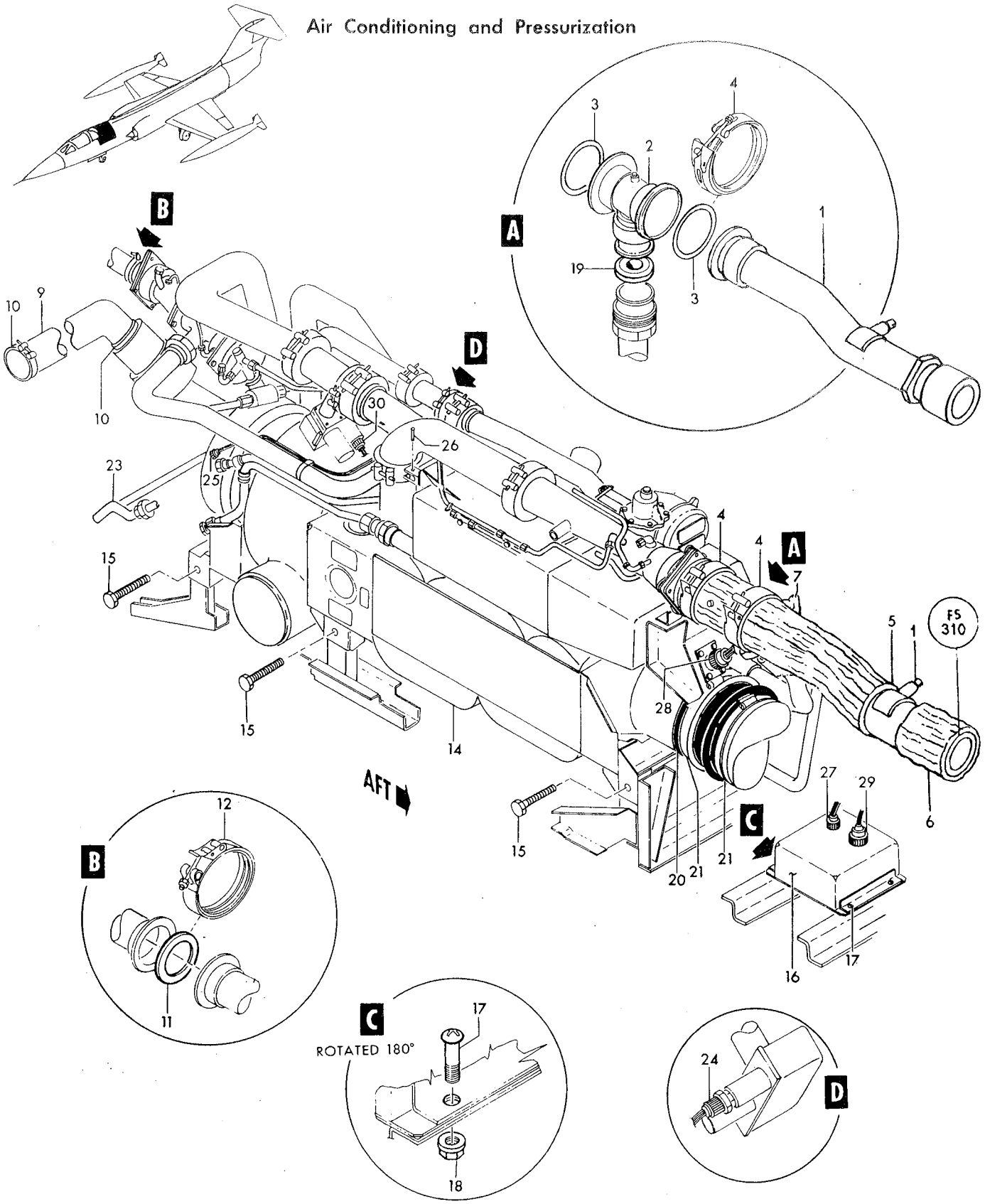

Figure 154— Air Conditioning Package

Figura e particolare	NDR	DENOMINAZIONE 1 2 3 4 5 6 7	Quant.	Codice applicab.
		AIR CONDITIONING PACKAGE SUPPORTS AND SWAY BRACE		
155	783477-3	SUPPORT INSTL, refrigerator *(see fig. 30 for reqd)*	REF	
-1	784108-1	SUPPORT ASSY, refrigerator forward	1	
-2	784106-1	SUPPORT ASSY, refrigerator center	1	
		Attaching Parts		
-3	NAS623-3-18	SCREW (80205)	2	
-4	NAS623-3-1	SCREW (80205)	2	
-5	MS21042L3	NUT (96906)	2	6701-6707
-6	784107-1	SUPPORT ASSY, refrigerator aft	1	
		Attaching Parts		
-7	NAS1103-2	BOLT (80205)	4	
	MS21042L3	NUT (96906)	4	6701-6707
-8	728267-1	PIN, refrigerator support	3	
	MS21042L5	NUT (96906)	3	
	784399-3	SUPPORT INSTL, fus sta 261 to 310 air conditioning package *(see fig. 38 for reqd)*	REF	
-9	784737-1	SUPPORT ASSY, temperature controller	1	
	784399-5	STUD INSTL, fus sta 261 to 310 *(see fig. 30 for reqd)*	REF	
-10	788745-1	RETAINER, sway brace stud	1	
-11	764030	STUD, refrigerator sway brace	1	
-12	MS20392-2C13	PIN (96906)	1	
-13	764032	BRACKET, refrigerator sway brace	1	
-14	682920-1-1	PACKAGE, (E33) air conditioning (A0076) (70210) (Lockheed spec dwg 644862-11) (see T.O. 15A3-3-35-4) (For spare replacement use 682920-1-1) *(see fig. 154 for reqd)*	REF	6701-6820
	682920-1-2	PACKAGE, (E33) air conditioning (A0076) (70210) (Lockheed spec dwg 644862-101) (see sep. T.O. whn avail.) (Spare replacement for 682920-1-1) *(see fig. 154 for reqd)*	REF	6821-
-15	548160-1	CONTROLLER, (E1) temperature (A0076) (70210) (Lockheed spec dwg 644880-3) (see T.O. 15A8-5-24-4) *(see fig. 154 for reqd)*	REF	

Air Conditioning and Pressurization

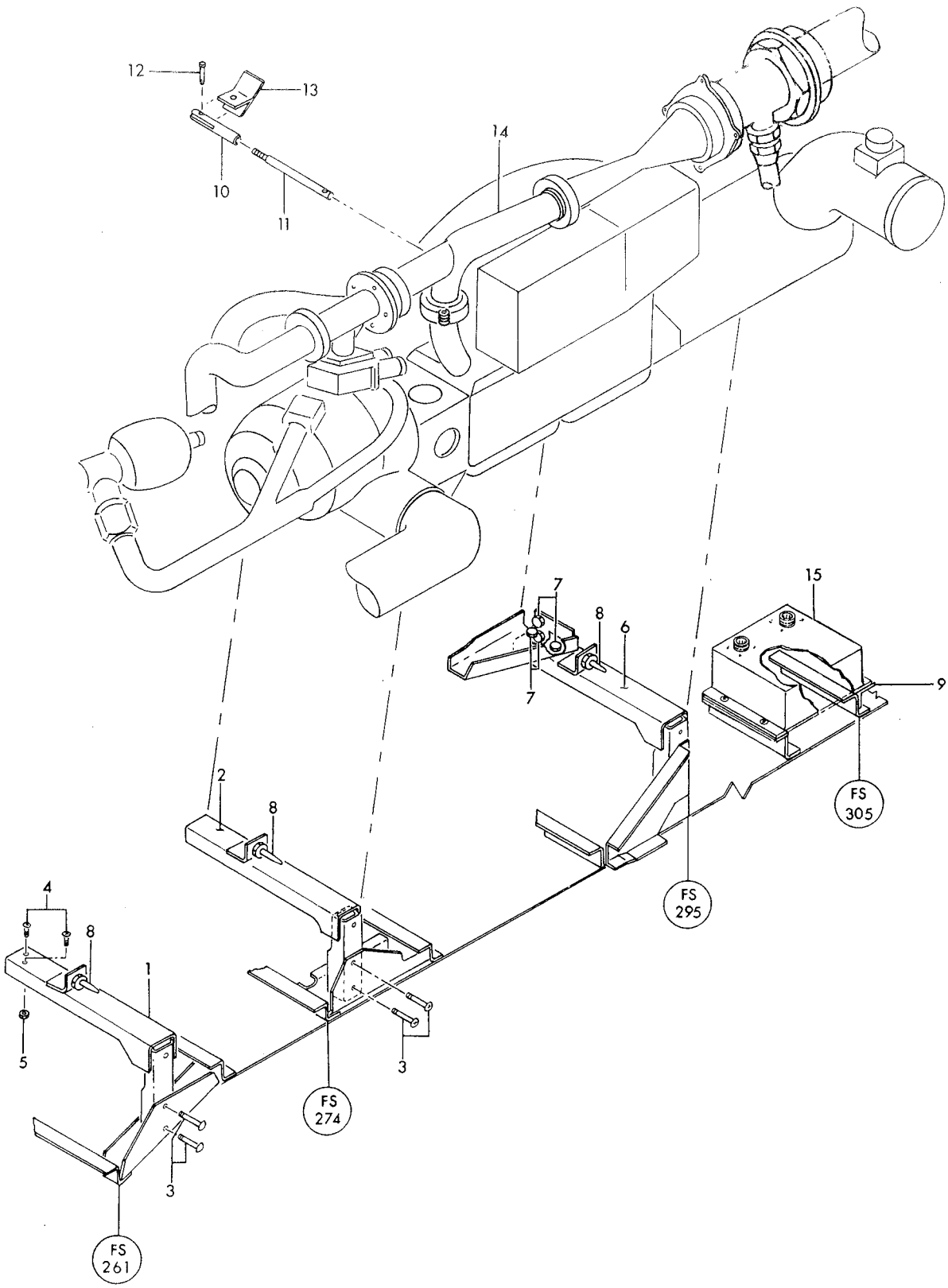

Figure 155— Air Conditioning Package Supports and Sway Brace

Figura e particolare	NDR		DENOMINAZIONE 1 2 3 4 5 6 7	Quant.	Codice applicab.
			ELECTRONIC COMPARTMENT COOLING PIPING		
155A	850377-101	A.	COOLING UNIT INSTL, liquid integral AIM-7E (NHA 851068-101) . . .	1	
- 1	107152A1	A.	. COOLING UNIT, (E135) liquid integral AIM-7E (A1615) (Alternate to 259800) (see AA11-128577A1-4) (Lockheed spec dwg 670953-101) . . .	1	
	259800	A.	. COOLING UNIT, (E135) liquid integral AIM-7E (49956) (Alternate to 107152A1) (Lockheed spec dwg 670953-101) (see sep. publ. whn avail)	REF	
			Attaching Parts		
	AN174H6A	A.	. BOLT (88044)	2	
	AN960C416	A.	. WASHER (88044)	2	
			*		
	850331-101	A.	. DUCT INSTL, ground cooling	1	
- 2	850380-101	A.	. . DUCT, ground cooling	1	
			Attaching Parts		
	NAS623-3-2		. . . SCREW (80205)	12	
			*		
- 3	850334-101	A.	. . . BRACKET, ground cooling duct	1	
- 4	850335-101	A.	. . . STOP, duct assembly ground cooling	1	
- 5	850336-101	A.	. . . STOP, duct assembly ground cooling	1	
- 6	850337-101	A.	. . . DOOR, ground cooling duct	1	
	4002-3	A.	. . . . STUD (71286)	2	
	4002G	A.	. . . . EYLET (71286)	2	
	R4G	A.	. . . . RING (71286)	2	
- 7	MS24523-29	A.	. . . SWITCH, (S171) (96906)	1	
- 8	AN737TW107	A.	. . . CLAMP (88044)	1	
	850529-101	A.	PLUMBING INSTL, coolanol (NHA 851068-101)	1	
-10	EC200D6	A.	. COUPLER, female (79326)	2	
-11	EC205D6	A.	. COUPLER, male (79326)	3	
-12	R508A0E0170	A.	. HOSE ASSY, flexible (50599)	1	
-13	R508A0E0120	A.	. HOSE ASSY, flexible (50599)	2	
-14	AN815-6D	A.	. UNION (88044)	6	
-15	NAS1596-6	A.	. PACKING (80205)	2	
-16	850301-111	A.	. TUBE ASSY, coolanol	1	
-17	850301-113	A.	. TUBE ASSY, coolanol	1	
-18	850301-115	A.	. TUBE ASSY, coolanol	1	
-19	850301-109	A.	. TUBE ASSY, coolanol	1	
-20	850301-107	A.	. TUBE ASSY, coolanol	1	
-21	R508A6E0070	A.	. HOSE ASSY, flexible (50599)	1	
-22	270R508A3E0100	A.	. HOSE ASSY, flexible (50599)	1	
-23	AN833-6D	A.	. ELBOW (88044)	1	
-24	AN360D916	A.	. WASHER (88044)	1	
-25	AN924-6D	A.	. NUT (88044)	2	
-26	AN804-6D	A.	. TEE (88044)	1	
-27	LS2805-3	A.	. WASHER (36659)	1	
-28	107151A1	A.	HEAT EXCHANGER (A1615) (Alternate to 259776) (Lockheed spec dwg 740394-101) (see AA11-128577A1-4) *(see fig. 109 for reqd)*	REF	
	259776	A.	HEAT EXHANGER (49956) (Lockheed spec dwg 740394-101) (Alternate to 107151A1) (see sep. publ. whn avail) *(see fig. 109 for reqd)*	REF	

A - Only for AWX.

Air Conditioning and Pressurization

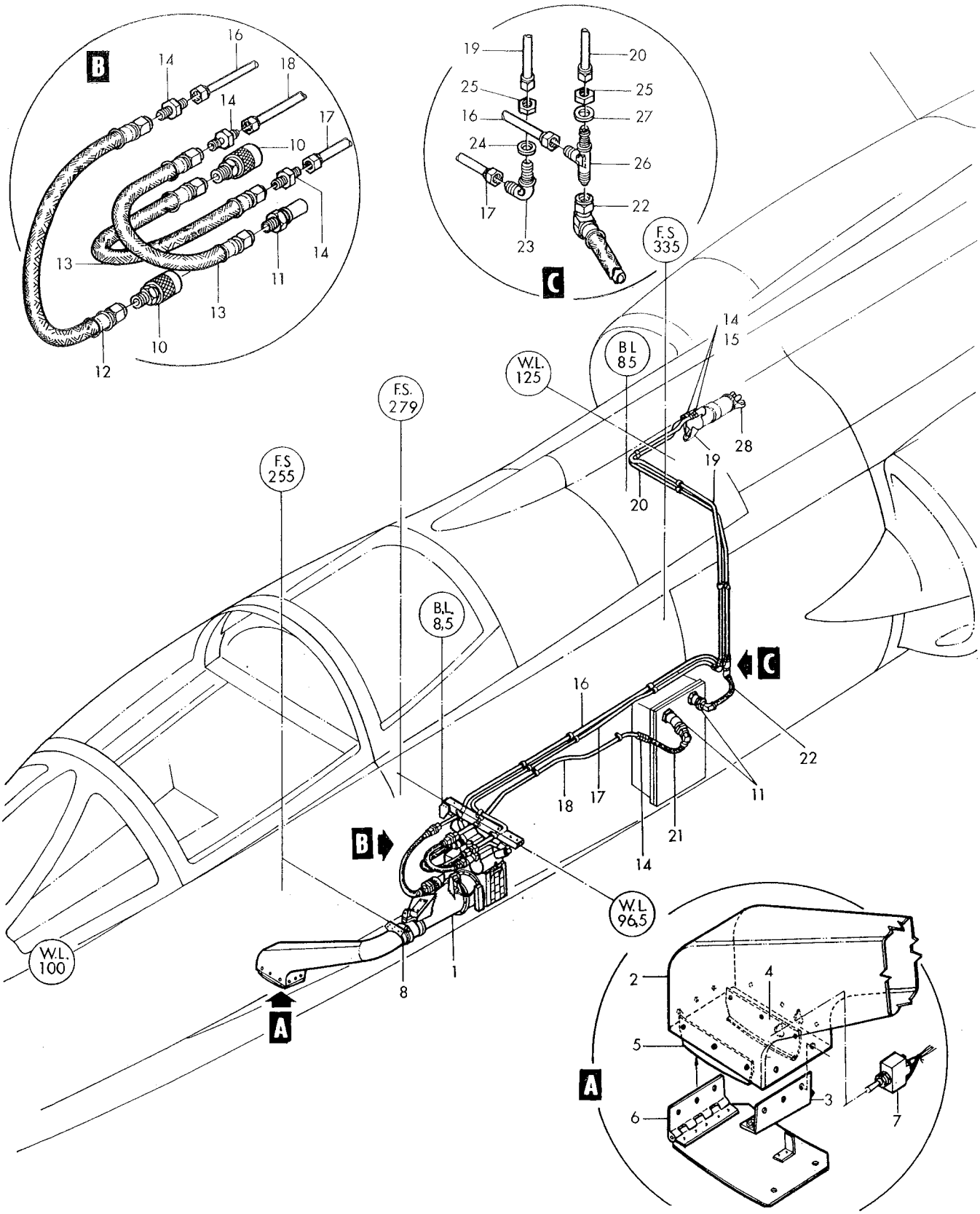

Figure 155A–Electronic Compartment Cooling Piping

Figura e particolare	NDR	1 2 3 4 5 6 7 DENOMINAZIONE	Quant.	Codice applicab.
		FORWARD FUSELAGE ELECTRICAL AND ELECTRONICS		
156	849900-101	. ELECTRICAL INSTL, fwd fus (NHA 849141-101) *(see fig. 159, 163, 176, 201 and 221)*	1	
	784641-1	. . EQUIPMENT INSTL, fwd end electronic compartment	1	
	784641-9	. . . EQUIPMENT ASSY, fwd end electronic compartment	1	
- 1	28V120-2	. . . . TRANSFORMER-RECTIFIER, (T3) 28 V DC 120 Amp (A0210) (94988) (Lockheed spec dwg 617317-1) (see T.O. 8C14-5-2-3)	1	
		Attaching Parts		
	NAS623-3-4	. . . . SCREW (80205)	4	
	MS21042L3	. . . . NUT (96906)	4	
	784641-3	. . STRUCTURE INSTL, fwd end electronic compartment	1	
- 2	785294-101	. . . DECAL, 120 Amp transformer-rectifier	1	
- 2A	786672-1	. . . DECAL, 120 Amp transformer-rectifier	1	
- 3	784247-3	. . EQUIPMENT INSTL, LH fwd electronic compartment *(see fig. 178)*	1	
- 4	784622-101	. . EQUIPMENT INSTL, electronic compartment fus sta 310 *(see fig. 181)*	1	
- 5	850031-101	C. . EQUIPMENT ASSY, electronic compartment junction box (Modified and reidentified to 850031-105 per AA.1F-104S-OT-148) *(see fig. 182)*	1	6701-6765
	850031-105	D. . EQUIPMENT ASSY, electronic compartment junction box (Supersedes 850031-101 per AA.1F-104S-OT-148) *(see fig. 182)*	1	6766-6815
	850031-107	. . EQUIPMENT ASSY, electronic compartment junction box *(see fig. 182)*	1	6816-6830
	850031-109	. . EQUIPMENT ASSY, electronic compartment suction box *(see fig. 182)*	1	6831-
- 6	795114-101	. . RACK INSTL, integrated electronics system *(see fig. 183)*	1	
- 8	776877-105	. . ELECTRICAL INSTL, AC load center *(see fig. 174)*	1	
- 9	849952-105	. . EQUIPMENT INSTL, AC load center *(see fig. 173)*	1	
-10	850736-101	. . PANEL INSTL, face plate heater resistor *(see fig. 160)*	1	
-11	850448-101	. . RELAY PANEL INSTL, fus sta 310 navigation lt *(see fig. 176)*	1	
-12	789904-1	. . DECAL, RH fus sta 315 AC load center	1	
-13	798303-1	. . DECAL, hydraulic generator	1	
-14	LS4998TB79	. . DECAL, identification (36659)	1	
-15	849967-101	. . ELECTRICAL INSTL, centerline armament bay disc. *(see fig. 190)*	1	
	850204-101	. . CONDUIT INSTL, fus sta 358 auxiliary fuel compt crossover	1	
	849645-101	. . . HARNESS ASSY, P-44 receptacle to load center *(see fig. 173 and 174)*	1	6701-6765
	851910-101	. . . HARNESS ASSY, P-44 receptacle to load center *(see fig. 173 and 174)*	1	6766-
-15A	850203-101	. . . . CONDUIT, fus sta 358 auxiliary fuel compt crossover	1	
-15B	EMRA20SF2A116	. . . . CONNECTOR, (J34) recp (P-150 and P-151 disc.) (81312)	1	
		Attaching Parts		
	NAS514P440-18	. . . SCREW (80205)	4	
	NAS42DD4-38	. . . SPACER (80205)	4	
	MS21042L04	. . . NUT (96906)	4	
-16	788184-1	. . AMPLIFIER INSTL, fus sta 243 to 249 ammunition rounds counter *(see fig. 160)*	1	
-17	NAS1096-3-12	. . SCREW (grd stud) (80205)	2	
	AN936A10	. . WASHER (grd stud) (88044)	2	
	MS35337-43	. . WASHER (grd stud) (96906)	2	
	AN345-10	. . NUT (grd stud) (88044)	2	
	AN960-10	. . WASHER (grd stud) (88044)	2	
	MS21042L3	. . NUT (grd stud) (96906)	2	
-18	776863-3	. . CONDUIT INSTL, case stowage compartment *(see fig. 173)*	1	
	849746-101	. . HARNESS ASSY, P-28 disc. to T-69 *(see fig. 159)*	1	
	797447-1	. . HARNESS ASSY, bhd 310 to UHF top antenna *(see fig. 189 and 200)*	1	6701-6815
	852378-101	. . HARNESS ASSY, bhd 310 to UHF top antenna *(see fig. 189 and 200)*	1	6816-
	797444-1	. . HARNESS ASSY, low pass filter to bhd 310 *(see fig. 178)*	1	6701-6815
	852380-101	. . HARNESS ASSY, low pass filter to bhd 310 *(see fig. 178)*	1	6816-
	852013-101	. . HARNESS ASSY, bhd 310 electronic compt antenna switching unit *(see fig. 180)*	1	
	851232-101	. . HARNESS ASSY, UHF receiver-transmitter to UHF directional coupler *(see fig. 176 and 179)*	1	6701-6815
	852356-101	. . HARNESS ASSY, UHF receiver-transmitter to UHF RF line switch *(see fig. 176 and 179)*	1	6816-
	790931-1	. . HARNESS ASSY, bhd 310 to low pass filter *(see fig. 181)*	1	6701-6815

Fuselage Electrical and Electronics

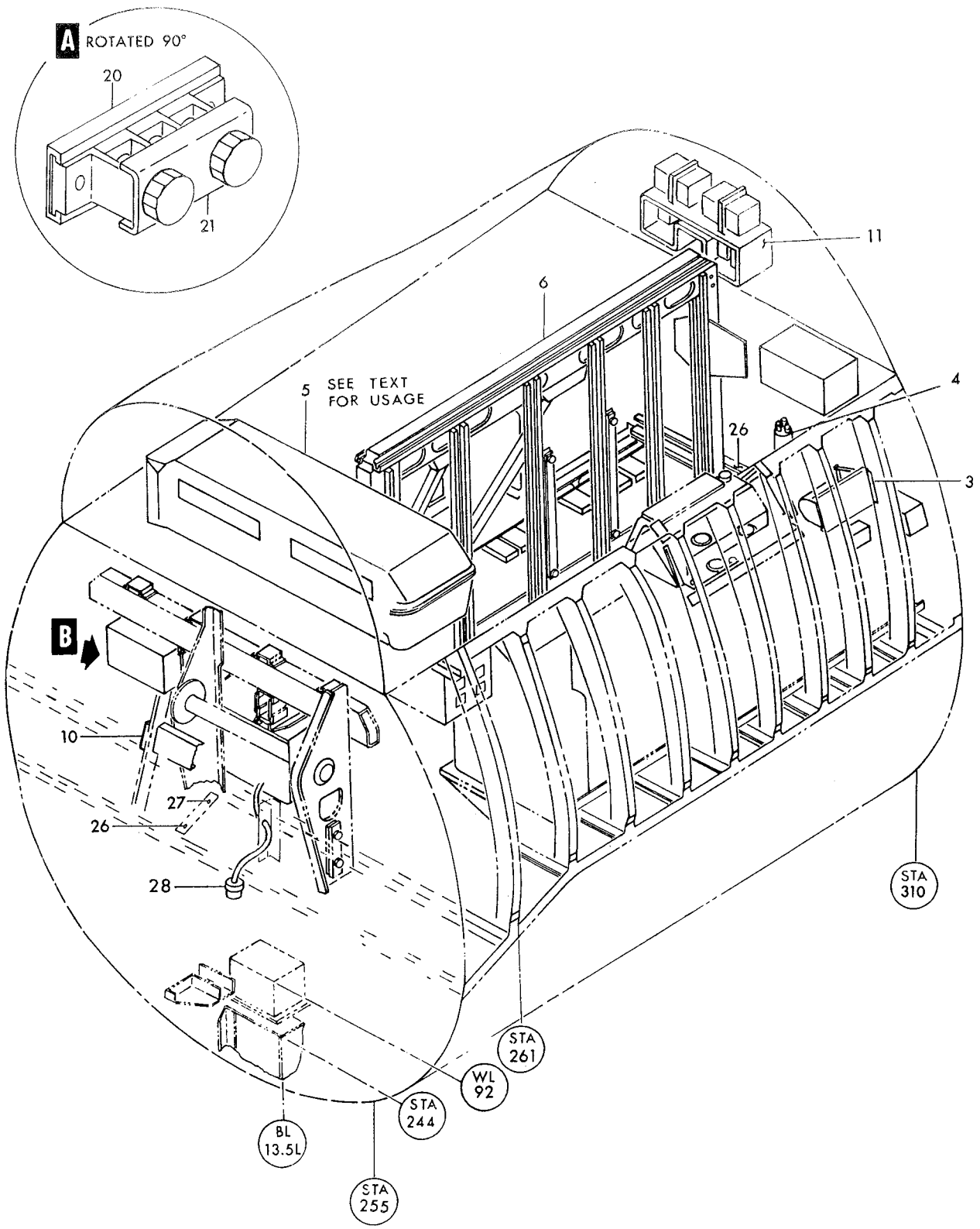

P56-14-39

Figure 156—Forward Fuselage Electrical and Electronics (Sheet 1 of 2)

Fuselage Electrical and Electronics

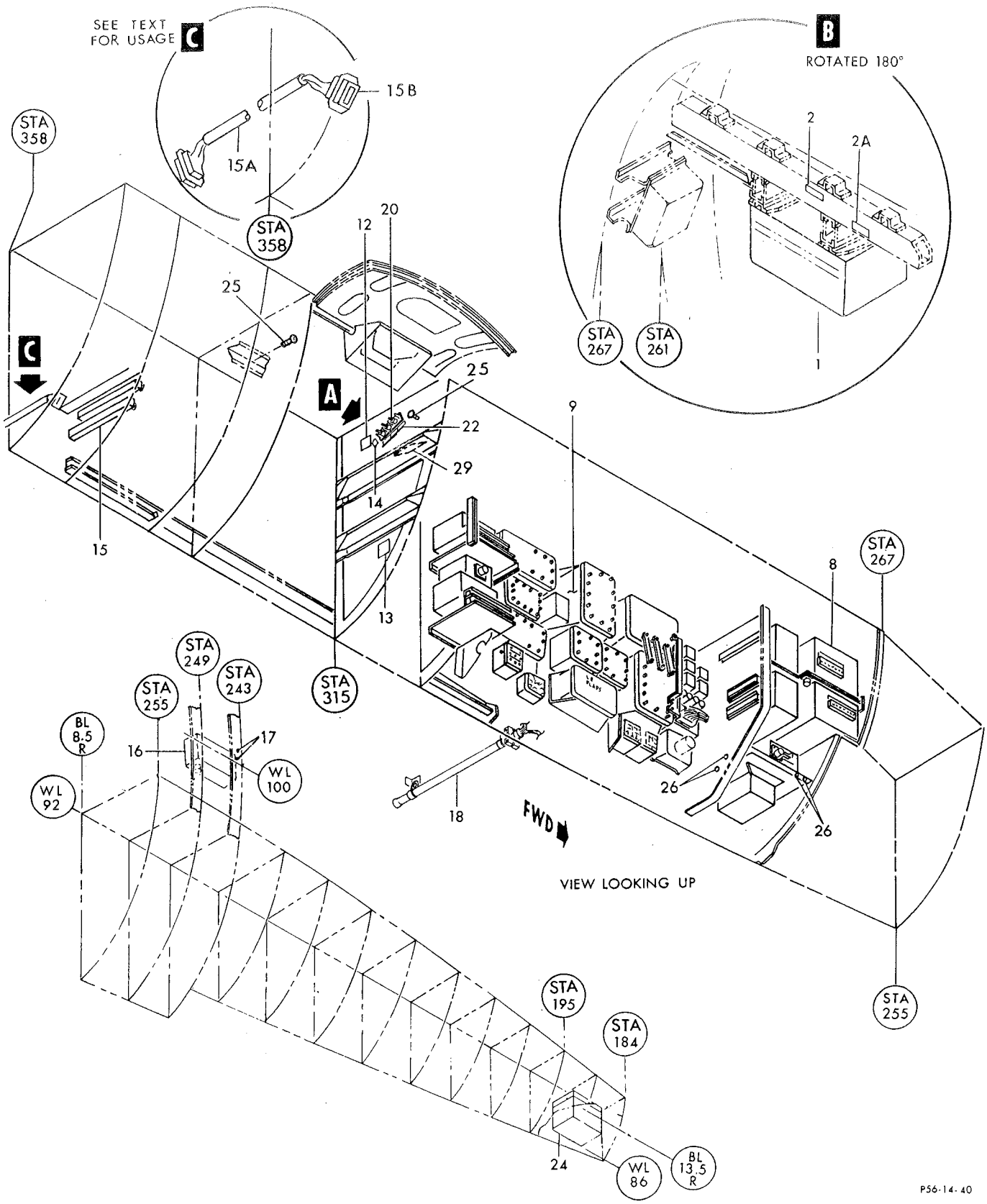

Figure 156—Forward Fuselage Electrical and Electronics (Sheet 2 of 2)

Figura e particolare	NDR	1 2 3 4 5 6 7 DENOMINAZIONE	Quant.	Codice applicab.
156	852360-101	HARNESS ASSY, bhd 310 to low pass filter *(see fig. 181)*	1	6816-
	785501-1	HARNESS ASSY, IFF receiver-transmitter to antenna switching unit *(see fig. 178 and 179)*	1	6701-6815
	852383-101	HARNESS ASSY, IFF receiver-transmitter to antenna switching unit *(see fig. 178 and 179)*	1	6816-
	852014-101	HARNESS ASSY, IFF antenna electronic compt antenna switching unit *(see fig. 178 and 200)*	1	
	785498-1	HARNESS ASSY, electronic compartment low pass filter to UHF line switch *(see fig. 181)*	1	6701-6815
	852357-101	HARNESS ASSY, electronic compartment low pass filter to UHF line switch *(see fig. 181)*	1	6816-
	849659-101	HARNESS ASSY, special stores disc. P-53 and P-54 *(see fig. 190)*	1	6701-6765
	852068-101	HARNESS ASSY, special stores disc. P-53 and P-54 *(see fig. 190)*	1	6766-
	852144-101	HARNESS ASSY, electronic compartment to AC load center	1	
	849640-101	HARNESS ASSY, ammunition compartment splice to AC load center *(see fig. 175)*	1	
	849642-101	HARNESS ASSY, fwd end circuit breaker door *(see fig. 173 and 174)*	1	6701-6765
	852143-101	HARNESS ASSY, fwd end circuit breaker door *(see fig. 173 and 174)*	1	6766-
	849644-101	HARNESS ASSY, P-43 disc to AC load center *(see fig. 173)*	1	
	852038-101	HARNESS ASSY, fixed freq generator test jacks *(see fig. 173 and 174)*	1	
	849638-101	HARNESS ASSY, RH electrical bay	1	6701-6815
	852396-101	HARNESS ASSY, RH electrical bay	1	6816-
	849624-101	HARNESS ASSY, duct anti-ice overheat sensor relay *(see fig. 173)*	1	
	849626-101	HARNESS ASSY, duct anti-ice power interlock relay *(see fig. 173)*	1	
	849634-101	HARNESS ASSY, generator under-frequency relay *(see fig. 174)*	1	
	849633-101	HARNESS ASSY, generator failure relays *(see fig. 173)*	1	
	849628-101	HARNESS ASSY, emergency bus interlock relay *(see fig. 173)*	1	
	849630-101	HARNESS ASSY, fixed frequency relays *(see fig. 173)*	1	6701-6815
	852397-101	HARNESS ASSY, fixed frequency relays *(see fig. 173)*	1	6816-
-20	LS7000A6-3	TERMINAL BLOCK ASSY, electrical (36659)	1	
		Attaching Parts		
	NAS601-8	SCREW (80205)	2	
	MS21042L06	NUT (96906)	2	
-21	LS7007-6-3	COVER ASSY, terminal block assy (36659)	1	
-22	LS7009-6	DECAL, terminal block identification (36659)	1	
	849660-101	HARNESS ASSY, P-66 disc. to splice *(see fig. 173 and 174)*	1	6701-6815
	852274-101	HARNESS ASSY, P-66 disc. to splice *(see fig. 173, 174 and 198)*	1	6816-
-24	849984-103	EQUIP. INSTL, fuel ind power and attitude indicator amplifier *(see fig. 160)*	1	
	849950-101	A. CHART, wiring	1	6701-6765
	852127-101	B. CHART, wiring	1	6701-6815
	852287-101	CHART, wiring	1	6816-
-25	NAS1096-3-12	SCREW (grd stud) (80205)	2	
	AN936A10	WASHER (grd stud) (88044)	2	
	MS35337-43	WASHER (grd stud) (96906)	2	
	AN345-10	NUT (grd stud) (88044)	2	
	AN960-10	WASHER (grd stud) (88044)	2	
	MS21042L3	NUT (grd stud) (96906)	2	
-26	NAS1096-3-12	SCREW (grd stud) (88044)	6	
	AN936A10	WASHER (grd stud) (88044)	6	
	MS35337-43	WASHER (grd stud) (96906)	6	
	AN345-10	NUT (grd stud) (88044)	6	
	AN960-10	WASHER (grd stud) (88044)	6	
	MS21042L3	NUT (grd stud) (96906)	6	
-27	NAS604-16	SCREW (grd stud) (80205)	1	
	AN936A416	WASHER (grd stud) (88044)	1	
	MS35337-44	WASHER (grd stud) (96906)	1	
	AN315-4R	NUT (grd stud) (88044)	1	
	AN960-416	WASHER (grd stud) (88044)	1	
	MS21042L4	NUT (grd stud) (96906)	1	

Figura e particolare	NDR	1 2 3 4 5 6 7 DENOMINAZIONE	Quant.	Codice applicab.
156	852028-101	HARNESS ASSY, emer. UHF radio to bhd 255 disc *(see fig. 163)*	1	6701-6815
	852379-101	HARNESS ASSY, emer. UHF radio to bhd 255 disc *(see fig. 163)*	1	6816-
-28	UG536BU	CONNECTOR, (P193) plug (bhd 255 disc) (80058)	1	
	KS89-05	ADAPTER (91836)	1	
-29	849854-101	CHART WIRING, AIM-7E generator control delay relay (alternate to FL0428-103)	1	
	FL0428-103	CHART WIRING, AIM-7E generator control delay relay (alternate to 849854-101)	REF	

A - Removed per AA.1F-104S-OT-149
B - Reqd per AA.1F-104S-OT-149
C - Removed per AA.1F-104S-OT-148
D - Reqd per AA.1F-104S-OT-148

Figura e particolare	NDR	1 2 3 4 5 6 7 DENOMINAZIONE	Quant.	Codice applicab.
		NOSE NASARR COMPONENTS		
157	851110-101	. RADAR COMPONENTS INSTL (NHA 849070-101)	1	6701-6815
	851110-105	. RADAR COMPONENTS INSTL (NHA 849070-101)	1	6816-
	851110-103	. . RADAR COMPONENTS, functional test unit	1	6701-6815
	851110-107	. . RADAR COMPONENTS, functional test unit	1	6816-
- 1	52700-506-1	. . . ANTENNA, (Z1) radar (A0084) (94756) (Lockheed spec dwg 670927-103) (see AA11-52700-506-4)	1	6701-6815
	52700-506-511	. . . ANTENNA, (Z1) radar (A0084) (Aeritalia spec dwg FL6001-103) (see sep. pub. whn avail.)	1	6816-
- 2	52710-506-1	. . . MOUNT, antenna and equipment (A0084) (94756) (Lockheed spec dwg 670930-103) (see AA11-52710-506-4)	1	6701-6815
	52710-506-521	. . . MOUNT, antenna and equipment (A0084) (Aeritalia spec dwg FL6004-105) (see sep pub. whn avail.)	1	6816-
		Attaching Parts		
	NAS1204-4	. . . SCREW (80205)	4	
	NAS1204-4	. . . SCREW (80205)	2	6701-6790
	NAS1204-5	. . . SCREW (80205)	2	6791-
- 3	59572-506-1	. . . COUPLER, waveguide (A0084) (94756) (Lockheed spec dwg 670934-101) (see AA11-52700-506-4)	1	
- 4	58780-506-1	. . . SWITCH, waveguide (A0084) (94756) (Lockheed spec dwg 670938-101) (see AA11-52700-506-4)	1	
- 5	86160-506-1	. . . WAVEGUIDE, flexible (A0084) (94756) (Lockheed spec dwg 670935-103) (see AA11-52700-506-4)	1	
- 6	86162-506-1	. . . ISOLATOR, load ferrite (A0084) (94756) (Lockheed spec dwg 670963-103) (see AA11-52700-506-4)	1	
		Attaching Parts		
	NAS623-3-2	. . . SCREW (80205)	1	
	AN960D10	. . . WASHER (88044)	1	
	MS21042L3	. . . NUT (96906)	1	
- 7	45840-506	. . . DUMMY LOAD (A0084) (94756) (Lockheed spec dwg 615611-1) (see AA11-R21G-2-3)	1	
- 8	40671-506	. . . TRANSMITTER, radar (A0084) (94756) (Lockheed spec dwg 615606-13) (see T.O. 11F45-2-11-4)	1	
- 9	59552-506-1	. . . CONTROL, automatic frequency (A0084) (94756) (Lockheed spec dwg 670928-103) (see AA11-59552-506-4)	1	6701-6815
	59522-506-501	. . . CONTROL, automatic frequency (A0084) (Aeritalia spec dwg FL6002-101) (see sep. pub. whn avail.)	1	6816-
-10	59569-506-1	. . . AMPLIFIER ASSY, (AR2) electronic control and calibration (A0084) (94756) (Lockheed spec dwg 670933-103) (see AA11-59569-506-4) *(see fig. 179)*	1	6701-6815
	59569-506-521	. . . AMPLIFIER ASSY, (AR2000) electronic control and calibration (A0084) (Aeritalia spec dwg FL6006-105) (see sep. pub. whn avail) *(see fig. 179)*	1	6816-
-11	59553-506-1	. . . SYNCHRONIZER, electrical (A0084) (94756) (Lockheed spec dwg 670929-103) (see AA11-59553-506-4)	1	6701-6815
	59553-506-501	. . . SYNCHRONIZER, electrical (A0084) (Aeritalia spec dwg FL6003-103) (see sep. pub. whn avail.)	1	6816-
	59574-506-1	. . . CONTROL, (E94) radar set (A0084) (94756) (Lockheed spec dwg 670937-103) (see AA11-59574-506-4) *(see fig. 163)*	1	6701-6815
	59574-506-511	. . . CONTROL, (E2002) radar set (A0084) (Aeritalia spec dwg FL6008-103) (see sep. pub. whn avail.) *(see fig. 163)*	1	6816-
	59567-506-1	. . . INDICATOR, (M89) direct view radar (A0084) (94756) (Lockheed spec dwg 670931-101) (see AA11-59567-506-4) *(see fig. 222)* . . .	1	6701-6815
	59567-506-511	. . . INDICATOR, (M2003) direct view radar (A0084) (Aeritalia spec dwg FL6005-101) (see sep. publ. whn avail.) *(see fig. 222)* . . .	1	6816-
	59573-506-1	. . . INDICATOR, (M90) clearance plane and antenna tilt (A0084) (94756) (Lockheed spec dwg 670936-103) (see AA11-59573-506-4) *(see fig. 222)*	1	6701-6815

Fuselage Electrical and Electronics

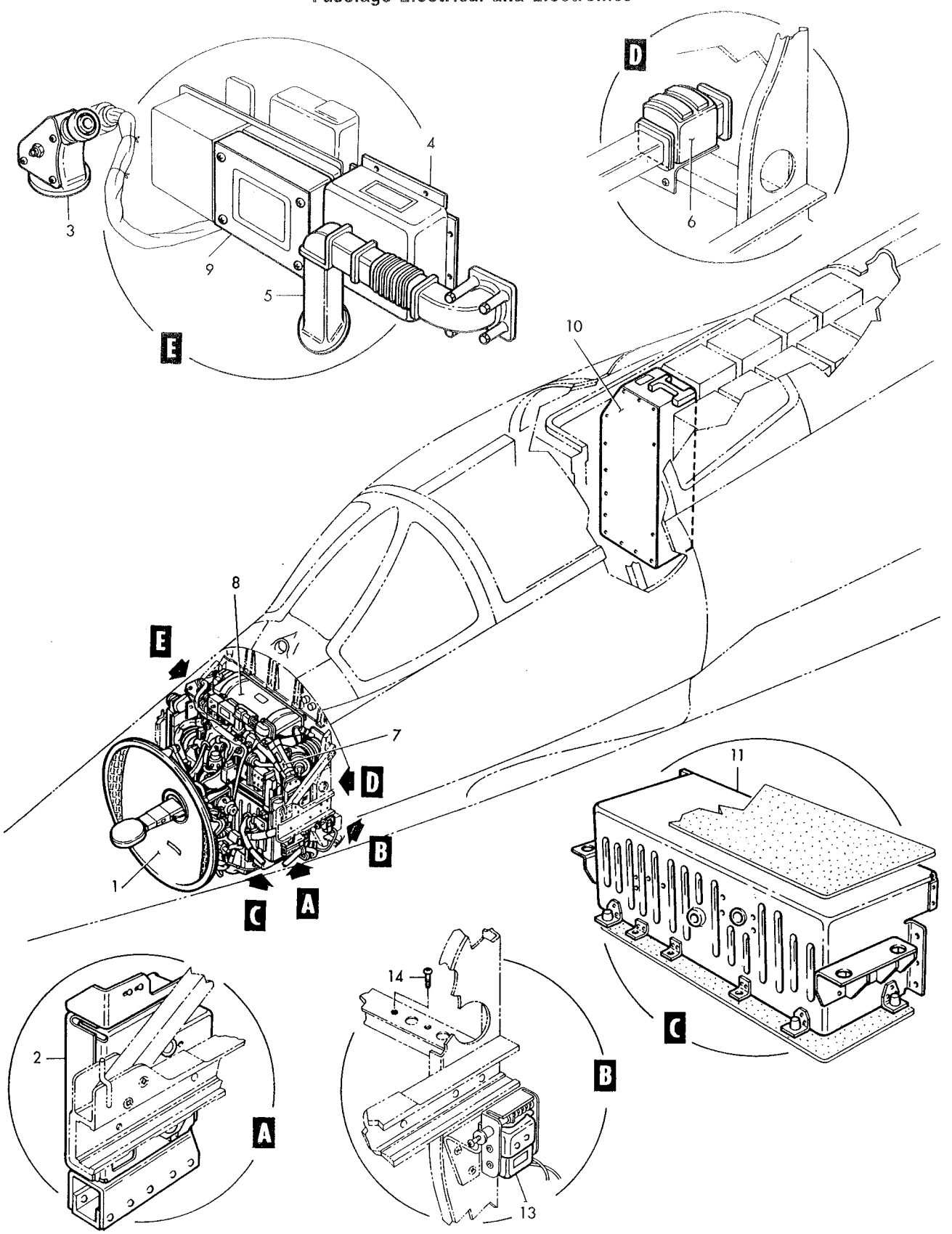

Figure 157–Nose Nasarr Components

Figura e particolare	NDR	1	2	3	4	5	6	7	DENOMINAZIONE	Quant.	Codice applicab.
157-11	59573-506-511			.	.				INDICATOR, (M2002) clearance plane and antenna tilt (A0084) (Aeritalia spec dwg FL6007-101) (see sep. publ. whn avail.) *(see fig. 222)*	1	6816-
	59575-506-1			.	.				DATA PROCESSOR, solid state (A0084) (94756) (Lockheed spec dwg 670940-103) (see AA11-59575-506-4)	1	6701-6815
	59575-506-501			.	.				DATA PROCESSOR, solid state (A0084) (Aeritalia spec dwg FL6009-103) (see sep. pub. whn avail.)	1	6816-
	41100-401-11			.	.				POWER SUPPLY, (A6) low voltage (A0084) (94756) (Lockheed spec dwg 670024-103) (see T.O. 11F33-5-10-4) *(see fig. 179)*	1	6701-6825
	41100-401-501			.	.				POWER SUPPLY, (A6) low voltage (A0084) (Aeritalia spec dwg FL6014-101) (see sep. pub. whn avail.) *(see fig. 179)*	1	6826-
	86164-506-1			.	.				WAVEGUIDE, flexible (A0084) (94756) (Lockheed spec dwg 671216-103) (see AA11-52700-506-4)	1	
	80215-506-1			.	.				CONTROL, (E136) range cursor (A0084) (94756) (Lockheed spec dwg 671202-101) (see AA11-80215-506-4)	1	6701-6821
	80215-506-501			.	.				CONTROL, (E136) range cursor (A0084) (Aeritalia spec dwg FL6015-101) (see sep. pub. whn avail.)	1	6822-
	784890-1			.	.				VALVE INSTL, cabin discharge air relief *(see fig. 137)*	1	6701-6765
	784890-101			.	.				VALVE INSTL, cabin discharge air relief *(see fig. 137)*	1	6766-
	40301-103-1			.	.				LOOSE EQUIPMENT KIT, forward integrated package assembly (A0084) (94756) (Lockheed spec. dwg 671559-101)	1	
	MS28775-012			.	.				PACKING (96906) *(see fig. 221)*	2	
	785777-101			.	.				SWITCH INSTL, fus sta 184 limit	1	
	785961-1			.	.				HARNESS ASSY, fwd bhd 184 to P-96 disc. *(see fig. 137 and 159)*	1	
	785777-3			.	.	.			ACTUATOR ASSY, fus sta 184 limit switch	1	
-13	61100			.	.	.	.		SWITCH, (S37) (radar interlock) (02005) (Lockheed spec dwg 613500-3)	1	
									Attaching Parts		
	AN515-6R12			.	.	.	.		SCREW (88044)	1	
	AN935-6L			.	.	.	.		WASHER (88044)	1	
	AN340-6			.	.	.	.		NUT (88044)	1	
									*		
-14	AN520-10R12			.	.	.			SCREW (grd stud) (88044)	1	
	AN936A10			.	.	.			WASHER (grd stud) (88044)	1	
	AN935-10L			.	.	.			WASHER (grd stud) (88044)	1	
	AN345-10			.	.	.			NUT (grd stud) (88044)	1	
	AN960D10			.	.	.			WASHER (grd stud) (88044)	1	
	MS21042L3			.	.	.			NUT (grd stud) (96906)	1	

Figura e particolare	NDR	1 2 3 4 5 6 7 DENOMINAZIONE	Quant.	Codice applicab.
		NOSE ELECTRICAL		
158	849901-101	. ELECTRICAL INSTL, nose section fus sta 184 *(see fig. 33 for reqd)* . .	REF	
	849748-101	. . HARNESS ASSY, nose section P-64 disc. to T-3 *(see fig. 33 for reqd)*	REF	
- 1	DM9700-7P004	. . . CONNECTOR, (P74) plug (bhd 184 P-64 disc.) (17419)	1	
- 2	DM9700-12P004	. . . CONNECTOR, (P86) plug (bhd 194 P-63 disc.) (17419)	1	
- 2A	MS3116P14-15S	. . . CONNECTOR, (P55) plug (angle of attack transducer) (96906) *(see fig. 33 for reqd)*	REF	
	849745-101	. . HARNESS ASSY, nose section heater *(see fig. 133)*	1	6701-6815
	852355-101	. . HARNESS ASSY, nose section heater *(see fig. 133)*	1	6816-
- 3	LS7000A6-3	. . TERMINAL BLOCK ASSY, electrical (36659)	1	
		Attaching Parts		
	NAS601-8	. . SCREW (80205)	2	
	MS21042L06	. . NUT (96906)	2	
		——————*———————		
- 4	LS7007-6-3	. . COVER ASSY, terminal block assy (36659)	1	
- 4A	LS7009-6	. . DECAL, terminal block identification (36659)	1	
- 5	LS4998T83	. . DECAL, terminal block identification (36659)	1	
- 6	764534	. . DECAL, high voltage warning	1	
- 7	850429-101	. . CHARTS, nose section TB3 wiring	1	
- 8	773105-1	. . BUNGEE ASSY, radar nose automatic pitch control harness . . .	1	
- 9	NAS623-3-2	. . . SCREW (80205)	1	
-10	MS21042L3	. . . NUT (96906)	1	
-11	773106-1	. . . STRAP, radar nose automatic pitch control harness	2	
-12	773105-3	. . . CORD ASSY, radar nose automatic pitch control harness . . .	1	
-13	NAS623-4-16	. . SCREW (80205)	1	
-14	MS21042L4	. . NUT (96906)	1	
-15	LS828	. . ROLLER, tube (36659)	1	
-16	775066-1	. . GUIDE ASSY, radar nose automatic pitch control harness bungee . .	1	
-17	775171-1	. . STRIP, nose section rubber	1	
-18	NAS1096-3-12	. . SCREW (grd stud) (80205)	2	
	AN936A10	. . WASHER (grd stud) (88044)	2	
	MS35337-43	. . WASHER (grd stud) (96906)	2	
	AN345-10	. . NUT (grd stud) (88044)	2	
	AN960-10	. . WASHER (grd stud) (88044)	2	
	MS21042L3	. . NUT (grd stud) (96906)	2	
-19	852052-101	. . HARNESS ASSY, tacan antenna to 184 bhd	1	
-20	UG1185A/U	. . . CONNECTOR, (P17) plug (bhd 184 disc.) (80058)	1	
	Z158	. . . GRIP (04073)	1	
-20A	MS90156-27D	. . . ADAPTER (96906)	1	
-21	AVL21-040	. . . CONNECTOR, (P12) plug (tacan antenna) (04073) (Lockheed spec dwg 740517-101)	1	
	Z158	. . . GRIP (04073)	1	
-22	MS21919DG7	. . CLAMP (96906)	1	
-23	TA4C74D22T	. . CLAMP (84971)	1	
		Attaching Parts		
	NAS1096-3-8	. . SCREW (80205)	1	
	NAS623-3-3	. . SCREW (80205)	1	
	AN960C10L	. . WASHER (88044)	1	
	MS21042L3	. . NUT (96906)	1	
		——————*———————		
-24	15978-11	. TRANSDUCER, (MT6) type AT107 vane relative wind (A0019) (98571) (Lockheed spec dwg 620590-103) (see T.O. 5F12-2-4-4) *(see fig. 33 for reqd)* .	REF	
-25	02RL1001-1	. ANTENNA, (E139) type RL02 (A0019) (see sep. publ. whn avail.) *(see fig. 133 for reqd)*	REF	

Fuselage Electrical and Electronics

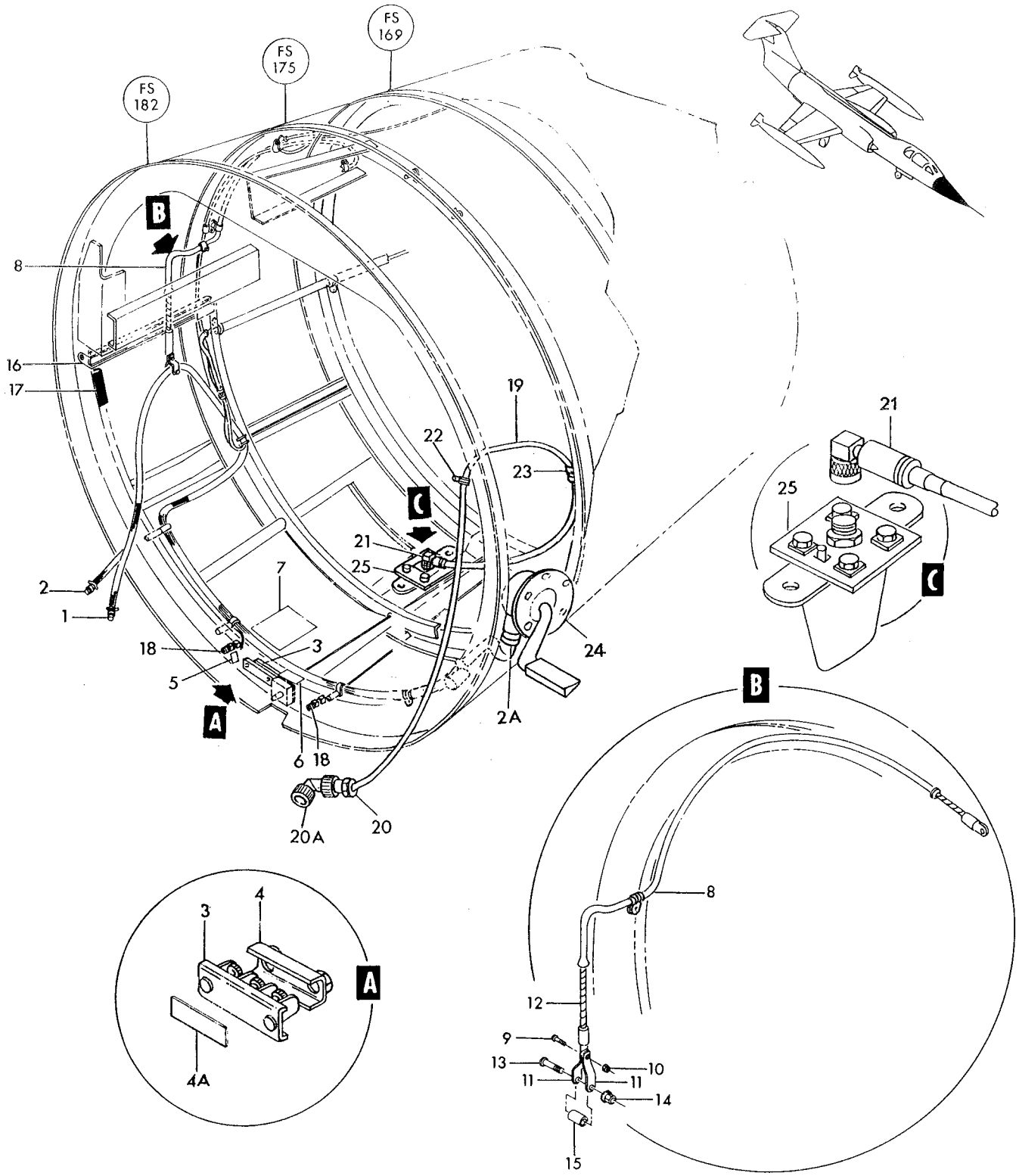

P56-13-1

Figure 158— Nose Electrical

Figura e particolare	NDR	1 2 3 4 5 6 7 DENOMINAZIONE	Quant.	Codice applicab.
		COCKPIT ELECTRICAL LEFT HAND		
159	849902-101	. ELECTRICAL INSTL, LH cockpit *(see fig. 30 for reqd)*	REF	
	849945-101	. . RELAY INSTL, fus sta 189 to 195 LH	1	6701-6765
	849945-103	. . RELAY INSTL, fus sta 189 to 195 LH	1	6766-
- 1	849946-101	. . . EQUIPMENT ASSY, fus sta 189 to 195 LH	1	6701-6765
	849946-103	. . . EQUIPMENT ASSY, fus sta 189 to 195 LH	1	6766-
		Attaching Parts		
	AN520-10R6	. . . SCREW (88044)	7	
		———— ✲ ————		
- 2	9302-5964A	. . . . RELAY, (K2) miniature 10 Amp DPDT solenoid (A0304) (35344) (Lockheed spec dwg 613683-1) (intchg wth AH23CN460AB)	4	
	AH23CN460AB	. . . . RELAY, (K2) miniature 10 Amp DPDT solenoid (72152) (Lockheed spec dwg 613683-1) (intchg wth 9302-5964A)	REF	
- 3	9309-5965A	. . . . RELAY, (K1) miniature 10 Amp 4PDT solenoid (A0304) (35344) (Lockheed spec dwg 613684-1) (intchg wth AH43CR460AB)	1	
	AH43CR460AB	. . . . RELAY, (K1) miniature 10 Amp 4PDT solenoid (72152) (Lockheed spec dwg 613684-1) (intchg wth 9309-5965A)	REF	
		Attaching Parts		
	AN935-4L	. . . . WASHER (88044)	4	
	AN340-4	. . . . NUT (88044)	4	
		———— ✲ ————		
- 4	AN520-10R12	. . . . SCREW (grd stud) (88044)	1	
	AN936A10	. . . . WASHER (grd stud) (88044)	1	
	AN935-10L	. . . . WASHER (grd stud) (88044)	1	
	AN345-10	. . . . NUT (grd stud) (88044)	1	
	AN960D10	. . . . WASHER (grd stud) (88044)	1	
	MS21042L3	. . . . NUT (grd stud) (96906)	1	
- 5	791654-1	. . . . BRACKET, fus sta 189 to 195 LH	1	
	849744-101	. . . . HARNESS ASSY, APC relay panel	1	6701-6765
	852249-101	. . . . HARNESS ASSY, APC relay panel	1	6766-
- 6	EMRA34PF2A116	. . . . . CONNECTOR, (J117) recp (P-117 disc. APC relay panel) (81312)	1	
		Attaching Parts		
	AN500A4-8	. . . . SCREW (88044)	1	
	AN515-4R6	. . . . SCREW (88044)	3	
	MS21042L04	. . . . NUT (96906)	4	
		———— ✲ ————		
- 7	849947-101	. . . . DECAL, LH sta 189 to 195 relay instl wiring	1	6701-6765
	852248-101	. . . . DECAL, LH sta 189 to 195 relay instl wiring	1	6766-
	849992-101	. . BRACKET INSTL, LH cockpit recp	1	
- 8	849993-101	. . . BRACKET, LH cockpit recp	1	
		Attaching Parts		
	NAS623-3-1	. . . SCREW (80205)	3	
		———— ✲ ————		
- 9	784898-1	. . BRACKET ASSY, LH sub panel connector	1	6701-6740
	784898-101	. . BRACKET ASSY, LH sub panel connector	1	6741-
		Attaching Parts		
	NAS1096-3-10	. . SCREW (80205)	2	
	MS21042L3	. . NUT (96906)	2	
		———— ✲ ————		
-10	849931-101	. . PANEL ASSY, LH switch *(see fig. 218)*	1	6701-6765
	849931-103	. . PANEL ASSY, LH switch *(see fig. 218)*	1	6766-6790
	851943-105	. . PANEL ASSY, LH switch *(see fig. 218)*	1	6791-6815
	851943-103	. . PANEL ASSY, LH switch *(see fig. 218)*	1	6816-
	851336-105	. . STRUCTURE INSTL, cockpit LH electrical terminal strip	1	
-11	851337-101	. . . CHART, cockpit TB2 terminal block	1	6701-6815
	852320-101	. . . CHART, cockpit TB2 terminal block	1	6816-
-12	LS4998TB2	. . . DECAL, terminal block identification (36659)	1	
	850112-101	. . RELAY INSTL, fus sta 243 to 249 LH	1	
-18	850113-101	. . . EQUIPMENT ASSY, fus sta 243 to 249 LH	1	
		Attaching Parts		
	NAS1096-3-6	. . . SCREW (80205)	4	
		———— ✲ ————		

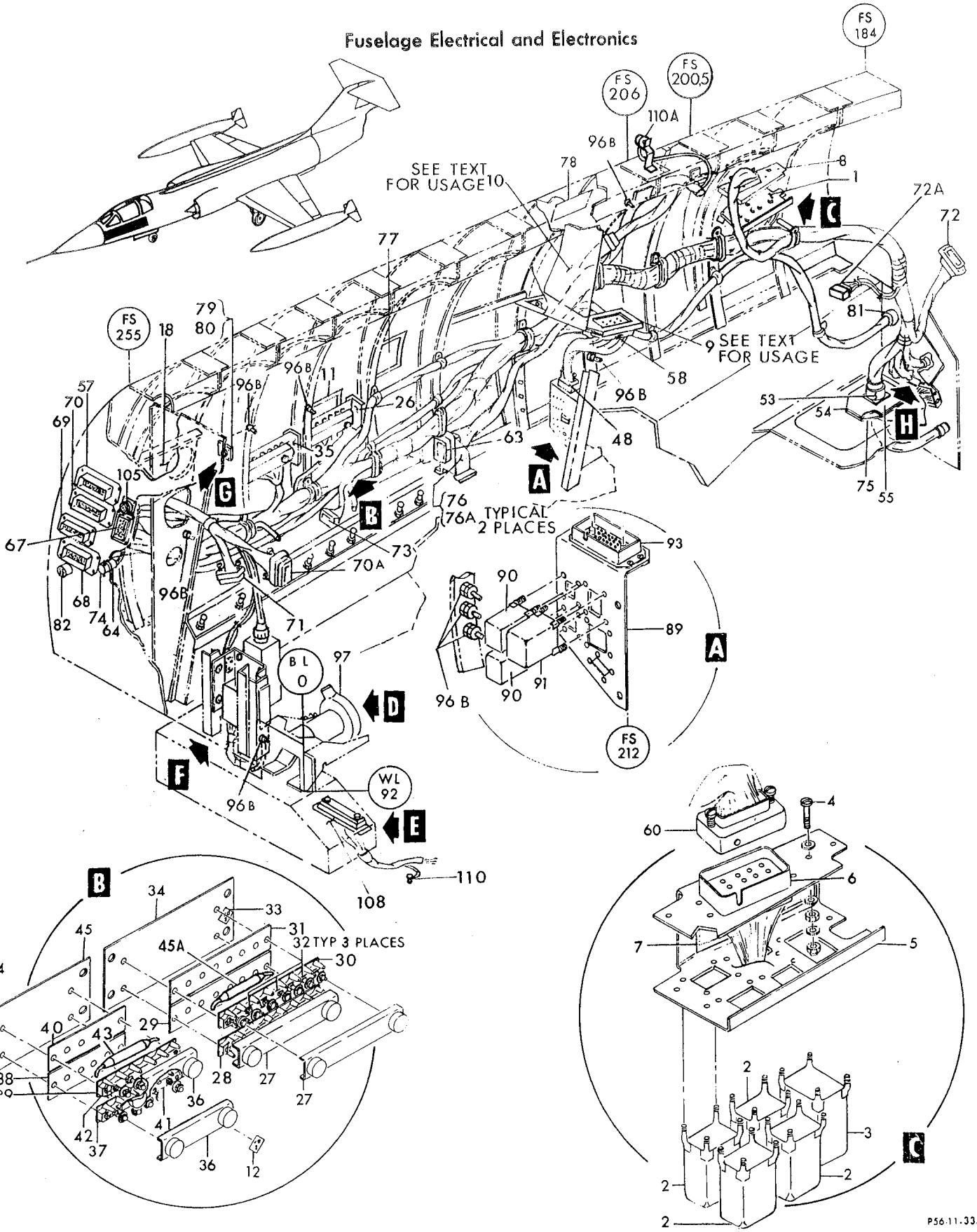

P56-11-335

Figure 159— Cockpit Electrical Left Hand (Sheet 1 of 2)

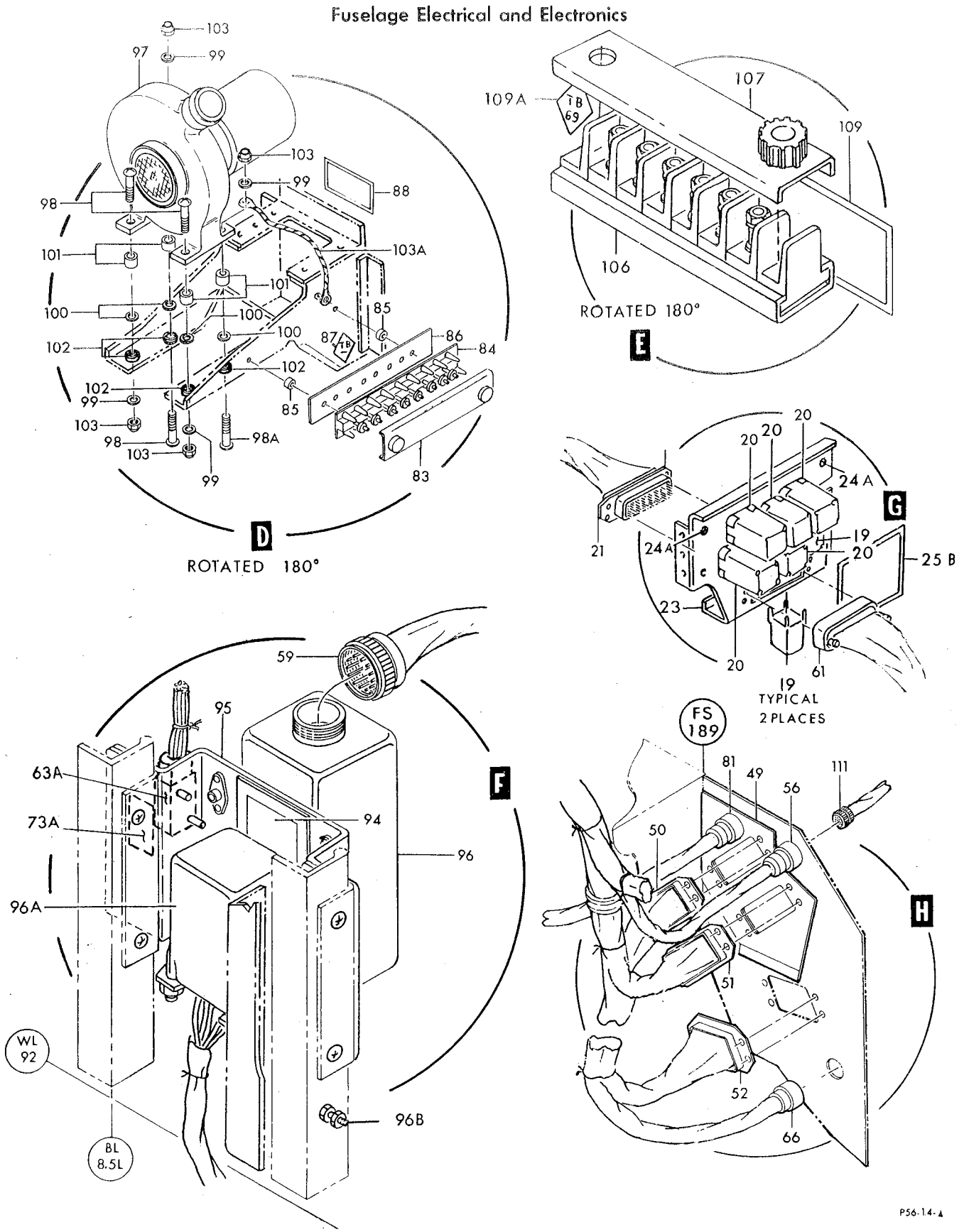

Figure 159— Cockpit Electrical Left Hand (Sheet 2 of 2)

Figura e particolare	NDR	1 2 3 4 5 6 7 DENOMINAZIONE	Quant.	Codice applicab.
159-19	9302-5964A	RELAY, (K2) miniature 10 Amp DPDT solenoid (A0304) (35344) (Lockheed spec dwg 613683-1) (intchg wth AH23CN460AB)	3	
	AH23CN460AB	RELAY, (K2) miniature 10 Amp DPDT solenoid (72152) (Lockheed spec dwg 613683-1) (intchg wth 9302-5964A)	REF	
-20	9309-5965A	RELAY, (K1) miniature 10 Amp 4PDT solenoid (A0304) (35344) (Lockheed spec dwg 613684-1) (intchg wth AH43CR460AB)	5	
	AH43CR460AB	RELAY, (K1) miniature 10 Amp 4PDT solenoid (72152) (Lockheed spec dwg 613684-1) (intchg wth 9309-5965A)	REF	
		Attaching Parts		
	MS35338-40	WASHER (96906)	4	
	MS20341-4S	NUT (96906)	4	
	849741-101	HARNESS ASSY, relay panel fus sta 243	1	
-21	EMRA66PF2A116	CONNECTOR, (J27) recp (P-118 disc.) (81312)	1	
		Attaching Parts		
	AN515-4R6	SCREW (88044)	4	
	MS21042L04	NUT (96906)	4	
-23	850114-101	BRACKET, fus sta 243 to 249 LH	1	
-24A	NAS1096-3-12	SCREW (grd stud) (80205)	2	
	AN936A10	WASHER (grd stud) (88044)	2	
	AN935-10L	WASHER (grd stud) (88044)	2	
	AN345-10	NUT (grd stud) (88044)	2	
	AN960-10	WASHER (grd stud) (88044)	2	
	MS21042L3	NUT (grd stud) (96906)	2	
-25B	850115-101	CHART, fus sta 243 to 249 relay panel wiring	1	
	849738-101	HARNESS ASSY, LH cockpit *(see fig. 162 and 163)*	1	6701-6740
	849876-101	HARNESS ASSY, LH cockpit *(see fig. 162 and 163)*	1	6741-6815
	852275-101	HARNESS ASSY, LH cockpit *(see fig. 162 and 163)*	1	6816-
-26	851336-101	ELECTRICAL ASSY, LH cockpit terminal block	1	
		Attaching Parts		
	NAS1096-3-8	SCREW (80205)	4	
-27	LS3850-2-7	SHIELD ASSY, terminal block (36659)	2	
-28	LS1906-12	TERMINAL BLOCK ASSY, electrical (36659)	1	
		Attaching Parts		
	NAS600-6	SCREW (80205)	2	
	MS21042L04	NUT (96906)	2	
-29	LS4999A11-17	STRIP, terminal block insulating and numering (36659)	1	
-30	LS1906-19	TERMINAL BLOCK ASSY, electrical (36659)	1	
		Attaching Parts		
	NAS600-6	SCREW (80205)	2	
	MS21042L04	NUT (96906)	2	
-31	LS4999A18-24	STRIP, terminal block insulating and numbering (36659)	1	
-32	MS25226-2-2	BUS (terminal block) (96906)	3	
-33	LS4998TB2	DECAL, terminal block identification (36659)	1	
-34	786072-1	SUPPORT, terminal block	1	
-35	851336-103	ELECTRICAL ASSY, LH cockpit terminal block	1	
		Attaching Parts		
	NAS1096-3-8	SCREW (80205)	4	
-36	LS3850-2-5	SHIELD ASSY, terminal block (36659)	2	
-37	LS1904-2	TERMINAL BLOCK ASSY, electrical (36659)	1	
		Attaching Parts		
	NAS600-6	SCREW (80205)	2	
	MS21042L04	NUT (96906)	2	
-38	LS4999A1-5	STRIP, terminal block insulating and numbering (36659)	1	

Figura e particolare	NDR	1 2 3 4 5 6 7 DENOMINAZIONE	Quant.	Codice applicab.
159-39	LS1904-7	TERMINAL BLOCK ASSY, electrical (36659)	1	
		Attaching Parts		
	NAS600-6	SCREW (80205)	2	
	MS21042L04	NUT (96906)	2	
		*		
-40	LS4999A6-10	STRIP, terminal block insulating and numbering (36659)	1	
-41	MS25226-2-2	BUS (terminal block) (96906)	1	
-42	MS25226-2-3	BUS (terminal block (96906)	1	
-43	2H4BF50	RESISTOR, (R36) 50 Ohm 20 Watt (44655)	1	
-44	LS4998TB2	DECAL, terminal block identification (36659)	1	
-45	785957-1	SUPPORT, terminal block	1	
-45A	RE70G68RIF	RESISTOR, (R85) 68,1 Ohm 15 W (91637)	1	
	FL0404-000	PANEL ASSY, LH cockpit circuit breaker *(see fig. 163 and 166)*	1	
	849728-101	HARNESS ASSY, bhd 255 exhaust temp. ind to P-80 disc. *(see fig. 162)*	1	
	849730-101	HARNESS ASSY, cockpit side lower instrument panel *(see fig. 198)*	1	6701-6740
	849875-101	HARNESS ASSY, cockpit side lower instrument panel *(see fig. 198)*	1	6741-6815
	852276-101	HARNESS ASSY, cockpit side lower instrument panel *(see fig. 198)*	1	6816-
-48	EMRA34SM1A106	CONNECTOR, (P60) plug (P-165 disc.) (81312)	1	
	849731-101	HARNESS ASSY, cockpit nasarr *(see fig. 149, 162 and 163)*	1	6701-6815
	852278-101	HARNESS ASSY, cockpit nasarr *(see fig. 149, 162 and 163)*	1	6816-
-49	790431-1	PLATE ASSY, fus sta 184 electrical connector	1	
-50	EMRA66SF2A106	CONNECTOR, (J36) recp (P-107 disc. nasarr bhd) (81312)	1	
-51	EMRA66SF2B106	CONNECTOR, (J37) recp (P-108 disc. nasarr bhd) (81312)	1	
	784921-1	RECEPTACLE ASSY, fus sta 184	1	
-52	EMRA66SF2C116G	CONNECTOR, (J287) recp (P-109 disc. nasarr bhd) (81312)	1	
-53	CA2120-10	JUNCTION SHELL (71468)	1	
		Attaching Parts		
	NAS600-8	SCREW (80205)	4	
	MS21042L04	WASHER (96906)	4	
		*		
-54	784954-1	PLATE, cockpit floor pressure	1	
		Attaching Parts		
	NAS1096-3-10	SCREW (80205)	8	
	AN960D10	WASHER (88044)	8	
		*		
-55	726477-3	GASKET, rubber	1	
-56	DM9601-7SW004	CONNECTOR, (J33) recp (P-96 disc.) (11139)	1	
-57	EMRA104SF2A116G	CONNECTOR, (J8) recp (P-35 disc.) (81312)	1	
	849734-101	HARNESS ASSY, LH cockpit P-113, P-117, P-118 and P-119 disc. to bhd 255 *(see fig. 161, 163 and 167)*	1	6701-6740
	852091-101	HARNESS ASSY, LH cockpit P-113, P-117, P-118 and P-119 disc. to. bhd 255 *(see fig. 161, 163 and 167)*	1	6741-
-58	EMRA66SF2A116	CONNECTOR, (J123) recp (P-113 disc. LH sub panel) (81312)	1	
-59	MS25183-16S1S	CONNECTOR, (P54) plug (signal simulator) (96906)	1	
-60	EMRA34SM1A106	CONNECTOR, (P60) plug (P-117 disc. fwd relay panel) (81312)	1	
-61	EMRA66SM1A106	CONNECTOR, (P39) plug (P-118 disc. aft relay panel) (81312)	1	
	789362-1	RECEPTACLE ASSY, throttle quadrant	1	
-63	EMRA34SF2B116	CONNECTOR, (J302) recp (P-119 disc. throttle quadrant) (81312)	1	
	849882-101	RELAY ASSY, canopy warning sound divider	1	
-63A	RZ0-14-101	RELAY, (K56) canopy warning sound divider (R0482)	1	
	1N4385	DIODE (80131)	1	
		Attaching Parts		
	MS35335-29	WASHER (96906)	2	
	1486	WASHER (R0482)	2	
	B6M2,6S03	NUT (R0482)	2	
		*		
	849729-101	HARNESS ASSY, fuel quantity indicator and amplifier to P-32 and P-50 disc. *(see fig. 162)*	1	
-64	1-670-1	CONNECTOR, (P92) plug (P-121 disc) (95712)	1	
	849726-101	HARNESS ASSY, cockpit auxiliary trim panel *(see fig. 163 and 167)*	1	6701-6815
	852339-101	HARNESS ASSY, cockpit auxiliary trim panel *(see fig. 163 and 167)*	1	6816-
	849725-101	HARNESS ASSY, auto pilot functional selector panel to P33 recp *(see fig. 163)*	1	

Figura e particolare	NDR	1 2 3 4 5 6 7 DENOMINAZIONE	Quant.	Codice applicab.
159	849736-101	HARNESS ASSY, cockpit trim panel P-116 disc. *(see fig. 167)*	1	6701-6815
	852345-101	HARNESS ASSY, cockpit trim panel P-116 disc. *(see fig. 167)*	1	6816-
	849735-101	HARNESS ASSY, fuel control panel P-115 disc. *(see fig. 170)*	1	
	849737-101	HARNESS ASSY, ARC552 control panel *(see fig. 161 and 163)*	1	
	849739-101	HARNESS ASSY, P-64 disc. to P-126 disc.	1	
-66	DM9601-7S004	CONNECTOR, (J31) recp (P-64 disc. bhd 184) ((17419)	1	
-67	EMRA34SF2A116G	CONNECTOR, (J74) recp (P-125 disc.) (81312)	1	
-68	EMRA104SF2A116G	CONNECTOR, (J8) recp (P-32 disc.) (81312)	1	
-69	EMRA66SF2A116G	CONNECTOR, (J2) recp (P-33 disc.) (81312)	1	
-70	EMRA104PF2A116G	CONNECTOR, (J7) recp (P-34 disc.) (81312)	1	
-70A	EMRA104PF2A116G	CONNECTOR, (J7) recp (P-36 disc.) (81312)	1	
-71	EMRA50PM1106	CONNECTOR, (P176) plug (P-126 disc. aft cockpit cross-over) (81312)	1	
-72	EMRA75SM1A106	CONNECTOR, (P243) plug (P-50 disc. fwd cockpit cross-over) (81312)	1	
-72A	EMRA42SF2A116	CONNECTOR, (J19) recp (P-1 disc.) (81312)	1	
-73	EMRA34SF2A116	CONNECTOR, (J22) recp (P-127 disc.) (81312) *(see fig. 163)*	1	
-73A	852024-101	CHART WIRING, canopy warning sound divider	1	
-74	5070-1	JACK, (J87) feed thru (95712)	1	
-75	764524	GASKET, LH cockpit floor pressure plate	1	
	850740-101	SUPPORT INSTL, LH cockpit throttle wiring harness	1	
-76	850741-101	SUPPORT, throttle control recp	1	
		Attaching Parts		
-76A	NAS603-8	SCREW (80205)	2	
-77	793162-1	DECAL, LH console trim strip	1	6701-6815
	852347-101	DECAL, LH console trim strip	1	6816-
-78	849932-101	CHART, LH sub panel wiring	1	
-79	785542-1	PLATE, coaxial cable pressure	1	
		Attaching Parts		
	NAS600-6	SCREW (80205)	4	
	MS21042L04	NUT (96906)	4	
-80	785541-1	GASKET, coaxial cable pressure	1	
	849742-101	HARNESS ASSY, cockpit area automatic pitch control and damper *(see fig. 161 and 214)*	1	
-81	DM9620-12S121A	CONNECTOR, (J32) recp (P-63 disc. bhd 184) (17419)	1	
-82	DM9708-37P19	CONNECTOR, (P42) plug (P-51 disc. bhd 255) (17419)	1	
	786167-1	TERMINAL INSTL, ventilated suit blower	1	
-83	LS3850-2-7	SHIELD ASSY, terminal block (36659)	1	
-84	LS1906-2	TERMINAL BLOCK ASSY, electrical (36659)	1	
		Attaching Parts		
	AN515-6R8	SCREW (88044)	2	
-85	LS605-4	SPACER, phenolic (36659)	2	
	MS21042L04	NUT (96906)	2	
-86	LS4999A1-7	STRIP, terminal block insulating and numbering (36659)	1	
-87	LS4998TB38	DECAL, terminal block identification (36659)	1	
-88	786380-1	DECAL, ventilated suit blower	1	
	850766-101	PANEL ASSY, dual timer relay	1	
-89	796566-1	BRACKET, relay panel	1	
-90	9302-5964A	RELAY, (K2) miniature 10 Amp DPDT solenoid (A0304) (35344) (Lockheed spec dwg 613683-1) (intchg wth AH23CN460AB)	2	
	AH23CN460AB	RELAY, (K2) miniature 10 Amp DPDT solenoid (72152) (Lockheed spec dwg 613683-1) (intchg wth 9302-5964A)	REF	
-91	9309-5965A	RELAY, (K1) miniature 10 Amp 4PDT solenoid (35344) (Lockheed spec dwg 613684-1) (intchg wth AH43CR460AB)	1	
	AH43CR460AB	RELAY, (K1) miniature 10 Amp 4PDT solenoid (72152) (Lockheed spec dwg 613684-1) (intchg wth 9309-5965A)	REF	
		Attaching Parts		
	MS35338-40	WASHER (96906)	4	
	MS20341-4S	NUT (96906)	4	

Figura e particolare	NDR	1 2 3 4 5 6 7 DENOMINAZIONE	Quant.	Codice applicab.
159	849514-101	HARNESS ASSY, dual timer relay panel	1	
-93	EMRA34PF2A116	CONNECTOR, (J117) recp (P-165 disc.) (81312)	1	
-94	786422-1	DECAL, ventilated suit blower motor relay	1	
	797074-101	PANEL INSTL, LH cockpit	1	
	797072-1	SUPPORT, signal simulator and ventilated suit relay	2	
		Attaching Parts		
	NAS623-3-2	SCREW (80205)	2	
	MS21042L3	NUT (96906)	2	
		*		
-95	797073-1	PANEL, signal simulator and ventilated suit relay	1	
		Attaching Parts		
	NAS623-3-2	SCREW (80205)	4	
		*		
-96	RBAM11-02	SIMULATOR, (DS1) LG position audio signal (A2829) (intchg wth 1520-2, 666-160, 14-78070 and 381-100)	1	
	1520-2	SIMULATOR, (DS1) LG position audio signal (53750) (Lockheed spec dwg 619156) (intchg wth 666-160, 14-78070, 381-100 and RBAM11-02)	REF	
	666-160	SIMULATOR, (DS1) LG position audio signal (71688) (Lockheed spec dwg 619156) (intchg with 14-78070, 1520-2, 381-100 and RBAM11-02)	REF	
	14-78070	SIMULATOR, (DS1) LG position audio signal (24930) (Lockheed spec dwg 619156) (intchg wth 1520-2, 666-160, 381-100 and RBAM11-02)	REF	
	381-100	SIMULATOR, (DS1) LG position audio signal (96182) (Lockheed spec dwg 619156) (intchg wth 1520-2, 666-160, 14-78070 and RBAM11-02)	REF	
		Attaching Parts		
	AN515-8R6	SCREW (88044)	4	
		*		
	849753-101	HARNESS ASSY, ventilated flying suit blower relay to T-38	1	
-96A	9230-3406	RELAY, (K7) 4PDT 115 V AC armature (35344) (Lockheed spec dwg 613348-3) (intchg wth 3878-10012 and 65-591)	1	
	3878-10012	RELAY, (K7) 4PDT 115 V AC armature (24727) (Lockheed spec dwg 613348-3) (intchg wth 9230-3406 and 65-591)	REF	
	65-591	RELAY, (K7) 4PDT 115 V AC armature (35346) (Lockheed spec dwg 613348-3 (intchg wth 9230-3406 and 3878-10012)	REF	
		Attaching Parts		
	MS35338-41	WASHER (96906)	4	
	MS20341-6S	NUT (96906)	4	
		*		
-96B	NAS1096-3-12	SCREW (grd stud) (80205)	9	
	AN936A10	WASHER (grd stud) (88044)	9	
	MS35337-43	WASHER (grd stud) (96906)	9	
	AN345-10	NUT (grd stud) (88044)	9	
	AN960-10	WASHER (grd stud) (88044)	9	
	MS21042L3	NUT (grd stud) (96906)	9	
	786191-101	BLOWER INSTL, ventilated flying suit (NHA 850168-101)	1	
	852059-101	HARNESS ASSY, ventilated flying suit blower motor to T-38	1	
-97	R34	BLOWER, (B2) electrical centrifugal (A2836) (alternate to CB349-110) (see separate publication when available)	1	
	CB349-110	BLOWER, (B2) electrical centrifugal (84987) (Lockheed spec dwg 644786-7) (alternate to R34) (see T.O. 15H3-2-37-13)	REF	
		Attaching Parts		
-98	NAS623-3-9	SCREW (80205)	3	
-98A	NAS623-3-11	SCREW (80205)	1	
-99	LS881-6	WASHER, aluminum (36659)	4	
-100	AN960D10	WASHER (88044)	4	
-101	NAS43DD3-20	SPACER (80205)	4	
	795615-3	SPACER, ventilated suit blower (mount in blower attach holes)	4	
-102	MS35489-38	GROMMET (96906)	4	
-103	MS21042L3	NUT (96906)	4	
		*		
-103A	MS25083-1BB3	JUMPER (96906)	1	

Figura e particolare	NDR	1 2 3 4 5 6 7 DENOMINAZIONE	Quant.	Codice applicab.
		Attaching Parts		
159	NAS1096-3-8	SCREW (80205)	1	
	AN960D10	WASHER (88044)	1	
	MS21042L3	NUT (96906)	1	
		*		
	849746-101	HARNESS ASSY, P-28 disc. to T-69 *(see fig. 156 for reqd)*	REF	
-105	DM9606-7P004	CONNECTOR, (J9) recp (P-28 disc.) (17419)	1	
	849900-101	ELECTRICAL INSTL, fwd fus *(see fig. 156 for reqd)*	REF	
-106	LS7000A6-6	TERMINAL BLOCK ASSY, electrical (36659)	1	
		Attaching Parts		
	NAS601-8	SCREW (80205)	2	
	MS21042L06	NUT (96906)	2	
		*		
-107	LS7007-6-6	COVER ASSY, terminal block assy (36659)	1	
-108	LS7009-6	DECAL, terminal block identification (36659)	1	
-109	799928-101	DECAL, cockpit TB69 wiring	1	
-109A	LS4998TB69	DECAL, identification (36659)	1	
-110	NAS1096-3-12	SCREW (grd stud) (80205)	1	
	AN936A10	WASHER (grd stud) (88044)	1	
	MS35337-43	WASHER (grd stud) (96906)	1	
	AN345-10	NUT (grd stud) (88044)	1	
	AN960-10	WASHER (grd stud) (88044)	1	
	MS21042L3	NUT (grd stud) (96906)	1	
	849683-101	HARNESS ASSY, LH windshield thermal switch	1	
-110A	G32-IL	THERMOSTAT, (S67) windshield thermal switch (97896) (Lockheed spec dwg 613662-1) *(see fig. 202)*	1	
	FL1011-000	BRACKET INSTL, LH cockpit thermal switch *(see fig. 202)*	1	
	852015-101	HARNESS ASSY, tacan rcvr to 184 bhd *(see fig. 160 and 179)*	1	
	785961-1	HARNESS ASSY, fwd bhd 184 to P-96 disc. *(see fig. 157 for reqd)*	REF	
-111	DM9700-7PW1A	CONNECTOR, (P88) plug (P-96 disc.) (17419)	1	

Figura e particolare	NDR	1	2	3	4	5	6	7	DENOMINAZIONE	Quant.	Codice applicab.
									COCKPIT ELECTRICAL RIGHT HAND		
160	849903-101								ELECTRICAL INSTL, RH cockpit *(see fig. 30 for reqd)*	REF	
	850267-101	B.							RELAY INSTL, fus sta 189 to 195 RH	1	6701-6765
	852115-101	C.							RELAY INSTL, fus sta 189 to 195 RH	1	
- 1	850268-101	B.							EQUIPMENT ASSY, fus sta 189 to 195 RH	1	6701-6765
	852114-101	C.							EQUIPMENT ASSY, fus sta 189 to 195 RH	1	
									Attaching Parts		
	NAS1096-3-6								SCREW (80205)	3	
									——————☼——————		
- 2	LS7008-6-11	B.							COVER ASSY, terminal block (36659)	1	6701-6765
	LS7008-6-13	C.							COVER ASSY, terminal block (36659)	1	
- 3	LS7000A6-11	B.							TERMINAL BLOCK ASSY, electrical (36659)	1	6701-6765
	LS7000A6-13	C.							TERMINAL BLOCK ASSY, electrical (36659)	1	
									Attaching Parts		
	AN507-440R8								SCREW (88044)	2	
	AN960D4								WASHER (88044)	2	
	MS21042L04								NUT (96906)	2	
									——————☼——————		
- 4	585-100								RELAY, (K29) DPDT 30 sec delay pull in time delay (A2836) (96182) (Lockheed spec dwg 619327-1) (intchg wth TD406-30S)	1	
	TD406-30S								RELAY, (K29) DPDT 30 sec delay pull in time delay (35344) (Lockheed spec dwg 619327-1) (intchg wth 585-100)	REF	
									Attaching Parts		
	AN960D6								WASHER (88044)	3	
	MS35338-41								WASHER (96906)	3	
	MS20341-6S								NUT (96906)	3	
									——————☼——————		
- 5	KSL10-01								KEYER, (DS50) signal light 100 plus or minus 10 CPM (A2829) (alternate to R3088)	1	
	R3088								KEYER, (DS50) signal light 100 plus or minus 10 CPM (00712) (Lockheed spec dwg 619324-3) (alternate to KSL10-01)	REF	
- 6	KCL10-01								KEYER, (DS83) signal light 100 plus or minus 10 CPM (A2829) (intchg wth R3088-5, 10150-1 and AU0346)	1	
	R3088-5								KEYER, (DS83) signal light 100 plus or minus 10 CPM (00712) (Lockheed spec. dwg 618402-3) (intchg wth 10150-1, AU0346 and KCL10-01)	REF	
	10150-1								KEYER, (DS83) signal light 100 plus or minus 10 CPM (08719) (Lockheed spec dwg 618402-3) (intchg wth R3088-5, AU0346 and KCL10-01)	REF	
	AU0346								KEYER, (DS83) signal light 100 plus or minus 10 CPM (01878) (Lockheed spec dwg 618402-3) (intchg wth R3088-5, 10150-1 and KCL10-01)	REF	
									Attaching Parts		
	NAS1096-3-8								SCREW (80205)	2	
	AN960D10								WASHER (88044)	2	
	MS21042L3								NUT (96906)	2	
									——————☼——————		
	MS25395D1	C.							RELAY, (K2000) (96906)	1	
									Attaching Parts		
	MS35338-44	C.							WASHER (96906)	2	
	MS20341-6S	C.							NUT (96906)	2	
									——————☼——————		
	849720-101	B.							HARNESS ASSY, slow indicator keyer to T-9 terminal strip	1	6701-6765
	852128-101	C.							HARNESS ASSY, slow indicator keyer to T-9 terminal strip	1	
- 7	NAS557-6A								GROMMET, nylon (80205)	1	
- 8	LS7009-6								DECAL, electrical terminal identification (36659)	1	
- 9	786066-1	B.							BRACKET, fus sta 189 to 195	1	6701-6765
	852113-101	C.							BRACKET, fus sta 189 to 195	1	
-10	850269-101	B.							DECAL, TB9 relay instl	1	6701-6765
	852130-101	C.							DECAL, TB9 relay instl	1	

Fuselage Electrical and Electronics

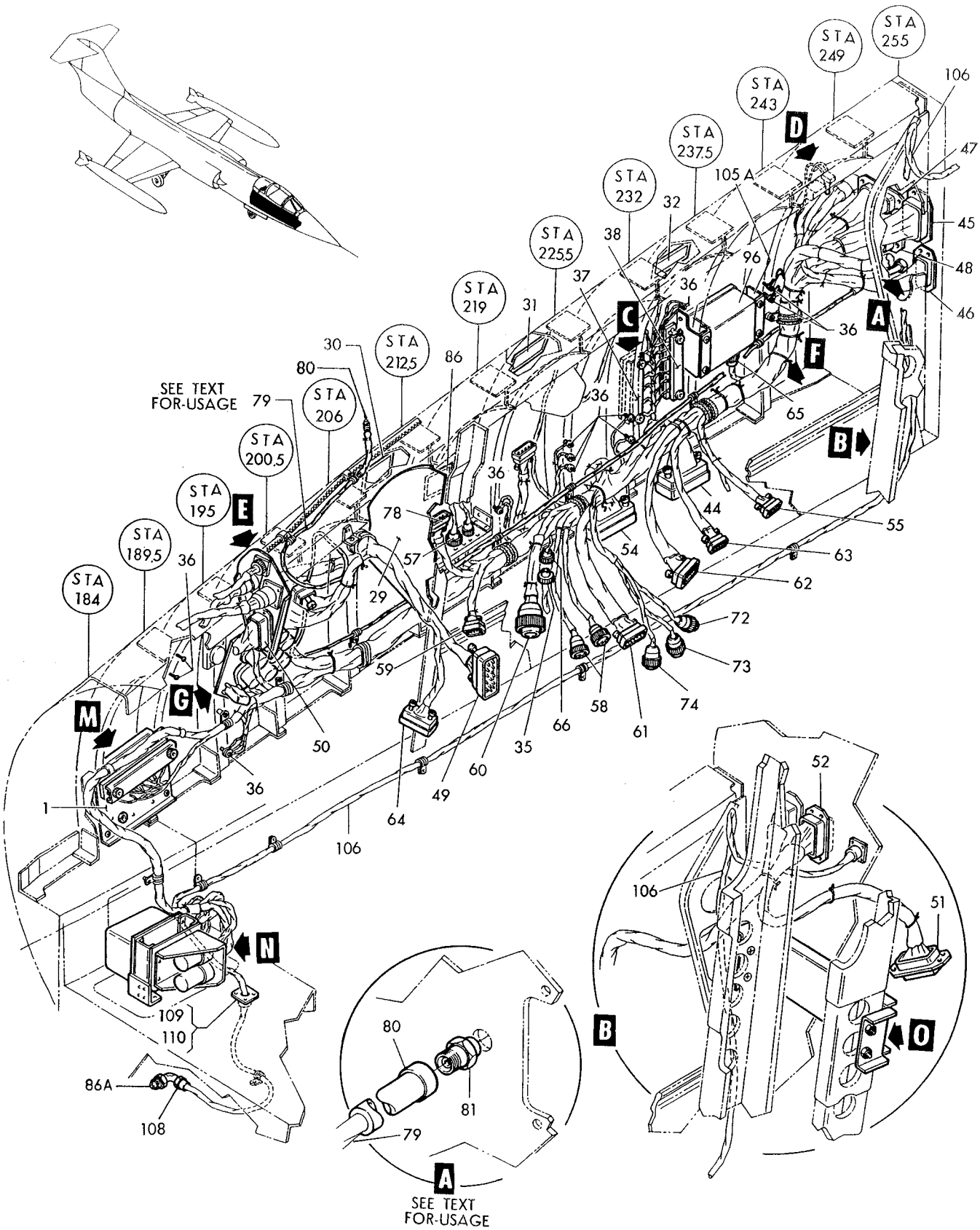

Figure 160–Cockpit Electrical Right Hand (Sheet 1 of 3)

Fuselage Electrical and Electronics

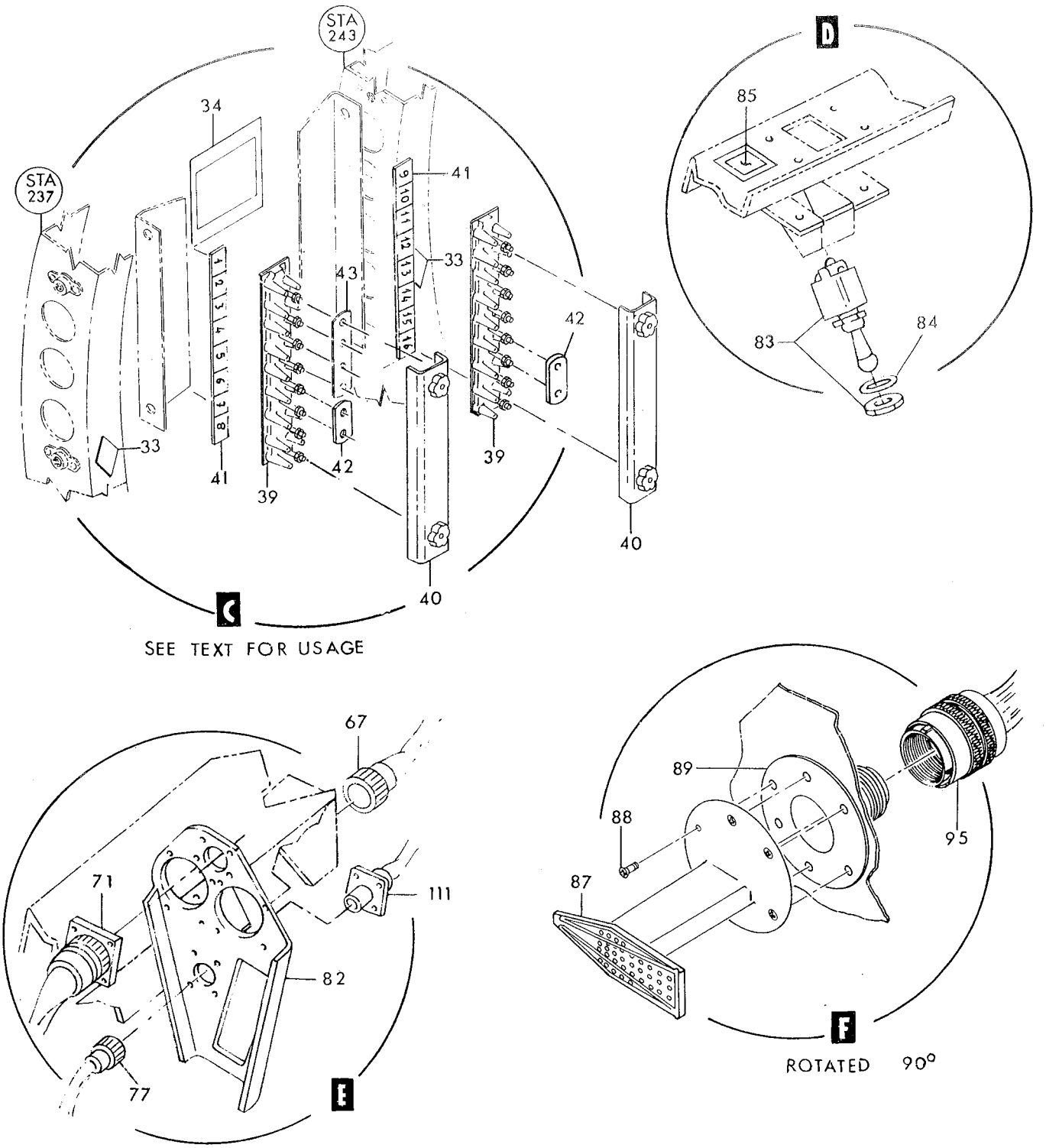

P56-16-30

Figure 160—Cockpit Electrical Right Hand (Sheet 2 of 3)

Fuselage Electrical and Electronics

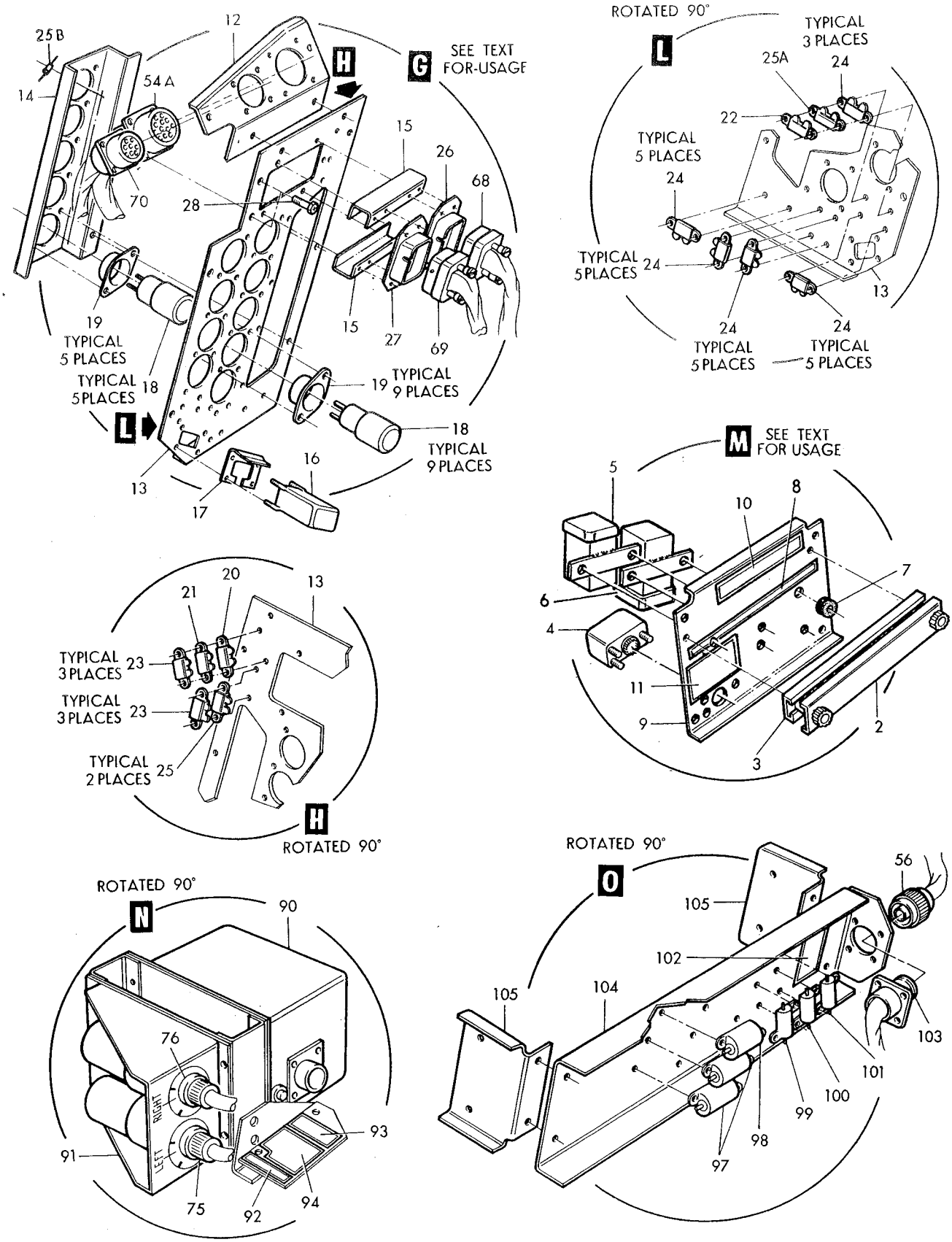

Figure 160–Cockpit Electrical Right Hand (Sheet 3 of 3)

Figura e particolare	NDR	1 2 3 4 5 6 7 DENOMINAZIONE	Quant.	Codice applicab.
160-11	786959-1	B. . . DECAL, special weapons indicator relay	1	6701-6765
	852129-101	C. . . DECAL, special weapons indicator relay	1	
	849948-101	. . ELECTRICAL INSTL, RH cockpit fus sta 200 to 206 warning lt dim and test	1	6701-6765
	849948-105	. . ELECTRICAL INSTL, RH cockpit fus sta 200 to 206 warning lt dim and test	1	6766-6815
	849948-109	. . ELECTRICAL INSTL, RH cockpit fus sta 200 to 206 warning lt dim and test	1	6816-
		Attaching Parts		
	NAS1096-3-7	. . . SCREW (80205)	9	
		✲		
-12	849949-101	. . . CHANNEL ASSY, relay and recp support RH cockpit	1	
	849948-103	D. . . PANEL ASSY, RH cockpit fus sta 200 to 206 warning lt dim and test (Modified and reidentified to 849948-107 per AA.1F-104S-OT-149)	1	6701-6765
	849948-107	E. . . PANEL ASSY, RH cockpit fus sta 200 to 206 warning lt dim and test (Supersedes 849948-103 per AA.1F-104S-OT-149)	1	6766-6815
	849948-111	. . . PANEL ASSY, RH cockpit fus sta 200 to 206 warning lt dim and test	1	6816-
-13	850676-101	. . . . PANEL, RH cockpit fus sta 200 to 206 warning lt dim and test	1	
-14	850678-101	. . . . SUPPORT, warning lt dim and test relays	1	
		Attaching Parts		
	AN515-6R18	. . . . SCREW (88044)	4	
	NAS43DD1-52	. . . . SPACER (80205)	4	
	MS21042L06	. . . . NUT (96906)	4	
		✲		
-15	790236-1	. . . . SUPPORT, RH cockpit fus sta 200 to 206 warning lt dim and test relays	2	
		Attaching Parts		
	AN515-6R5	. . . . SCREW (88044)	4	
		✲		
-16	9302-5964A	. . . . RELAY, (K2) miniature 10 amp DPDT solenoid (A0304) (35344) (Lockheed spec dwg 613683-1) (intchg wth AH23CN460AB)	1	
	AH23CN460AB	. . . . RELAY, (K2) miniature 10 Amp DPDT solenoid (72152) (Lockheed spec dwg 613683-1) (intchg wth 9302-5964A)	REF	
		Attaching Parts		
	MS35338-40	. . . . WASHER (96906)	4	
	MS20341-4S	. . . . NUT (96906)	4	
		✲		
-17	851019-101	. . . . GUARD, RH cockpit fus sta 200 to 206 warning lt dim and test relays	1	
-18	UN324362-020	. . . . RELAYS, (K37) hermetically sealed 6 PDT plug in (61775) (Lockheed spec dwg 613650-5)	14	
-19	UN385987	. . . . SOCKET (J170) (61775)	14	
-20	F113	. . . . RESISTOR, (R28) 100 Ohm 10 Watt (44655)	1	
-21	F115	. . . . RESISTOR, (R48) 150 Ohm 10 Watt (44655)	1	
-22	3/4TA51F-S220	. . . . RESISTOR, (R27) 220 Ohm 10 Watt (44655)	1	
-23	3/4TA51F-S330	. . . . RESISTOR, (R29) 330 Ohm 10 Watt (44655)	6	
-24	3/4TA51F-S560	. . . . RESISTOR, (R25) 560 Ohm 10 Watt (44655)	23	
-25	3/4TA51F-S680	. . . . RESISTOR, (R26) 680 Ohm 10 Watt (44655)	2	
-25A	3/4TA51F-S330	E. . . . RESISTOR, (R29) 330 Ohm 10 Watt (44655)	1	
-25B	M22684-03-0083	F. . . . RESISTOR, (R9) 510 Ohm 1 Watt (81349)	1	
		Attaching Parts		
	AN515-4R26	. . . . SCREW (88044)	12	
	NAS600-22	D. . . . SCREW (80205)	2	6701-6765
	AN515-4R26	E. . . . SCREW (88044)	2	
	AN340-4	. . . . NUT (88044)	14	
	MS21042L04	. . . . NUT (96906)	14	
		✲		
	849708-101	D. . . . HARNESS ASSY, test and dim relay panel	1	6701-6765
	852085-101	E. . . . HARNESS ASSY, test and dim relay panel	1	6701-6815
	852285-101	. . . . HARNESS ASSY, test and dim relay panel	1	6816-
-26	EMRA66PF2A006	. . . . . CONNECTOR, (J146) recp (P-91 disc.) (81312)	1	
-27	EMRA66PF2B006	. . . . . CONNECTOR, (J147) recp (P-92 disc.) (81312)	1	
		Attaching Parts		
	AN515-4R6	. . . . SCREW (88044)	4	
	MS21042L04	. . . . NUT (96906)	4	
		✲		
-28	NAS1096-3-12	. . . . SCREW (grd stud) (80205)	2	

Figura e particolare	NDR	1 2 3 4 5 6 7 DENOMINAZIONE	Quant.	Codice applicab.
		ELECTRONIC COMPARTMENT JUNCTION BOX		
182	850031-101	C. EQUIPMENT ASSY, electronic compartment junction (Modified and reidentified to 850031-105 per AA.1F-104S-OT-148) *(see fig. 156 for reqd)* . . .	REF	6701-6765
	850031-105	D. EQUIPMENT ASSY, electronic compartment junction (Supersedes 850031-101 AA.1F-104S-OT-148) *(see fig. 156 for reqd)*	REF	6766-6815
	850031-107	. EQUIPMENT ASSY, electronic compartment junction *(see fig. 156 for reqd)*	REF	6816-6830
	850031-109	. EQUIPMENT ASSY, electronic compartment junction *(see fig. 156 for reqd)*	REF	6831-
- 1	77-100	. . RECTIFIER, (CR1) 4 stage blocking (A2836) (96182) (Lockheed spec dwg 617277-1) (see T.O. 8C14-2-4-3)	1	
		Attaching Parts		
	AN960D10	. . WASHER (88044)	2	
	MS21042L3	. . NUT (96906)	2	
- 2	9T39Y2956	. . TRANSFORMER, (T2) power stepdown (93517) (Lockheed spec dwg 617235) (intchg wth 70G348)	1	
	70G348	. . TRANSFORMER, T2) power stepdown (88422) (Lockheed spec dwg 617235) (intchg wth 9T39Y2956)	REF	
		Attaching Parts		
	AN515-8R6	. . SCREW (88044)	4	
	AN935-8L	. . WASHER (88044)	4	
	AN960D8	. . WASHER (88044)	4	
- 3	774059-1	. . COVER, battery blocking rectifier	2	
		Attaching Parts		
	AN520-10R10	. . SCREW (88044)	2	
	AN960D10	. . WASHER (88044)	4	
	MS21042L3	. . NUT (96906)	2	
- 4	773936-1	. . RECTIFIER ASSY, battery blocking	2	
- 5	CK776	. . . RECTIFIER, (CR2) silicon blocking diode (49956) (Lockheed spec dwg 613580-1) (spares replacement use 1N250B) (intchg wth 1N250)	1	
	1N250	. . . RECTIFIER, (CR2) silicon blocking diode (81349) (Lockheed spec dwg 613580-1) (spares replacement use 1N250B) (intchg wth CK776)	REF	
	1N250B	. . . RECTIFIER, (CR2) silicon blocking diode (04713) (spares replacement for CK776 and 1N250)	REF	
- 6	MS35489-9	. . GROMMET (rubber) (96906)	4	
- 7	SS48152	. . PLUG, button (61864)	20	
- 7A	SS48152	H. . PLUG, button (61864)	4	6701-6815
- 8	770132-1	. . DECAL, junction box hydraulic blocking rectifier	1	
- 9	761061-4	. . DECAL, electronic compartment junction box	1	
-10	777006-1	. . DECAL, blocking rectifier No. 1	1	
-11	777007-1	. . DECAL, blocking rectifier No. 2	1	
-12	785756-101	. . BUS BAR, junction box circuit breaker	1	
-13	785756-17	. . BUS BAR, junction box circuit breaker	1	
-14	785756-29	. . BUS BAR, junction box circuit breaker	1	
-15	785756-3	. . BUS BAR, junction box circuit breaker	1	
-16	785756-1	. . BUS BAR, junction box circuit breaker	2	
-17	785756-11	. . BUS BAR, junction box circuit breaker	1	
-18	785756-7	. . BUS BAR, junction box circuit breaker	3	6701-6765
-18A	785756-7	. . BUS BAR, junction box circuit breaker	2	6766-
-18B	785756-5	. . BUS BAR, junction box circuit breaker	2	6766-6815
-18C	785756-5	H. . BUS BAR, junction box circuit breaker	1	6766-6815
-18D	785756-7	G. . BUS BAR, junction box circuit breaker	1	
-19	785756-5	. . BUS BAR, junction box circuit breaker	2	6701-6765
-19A	785756-35	A. . BUS BAR, junction box circuit breaker	1	6701-6765
-19B	785756-37	B. . BUS BAR, junction box circuit breaker	1	
-20	MP705	. . CIRCUIT BREAKER, (CB10) 20 Amp SPST miniature (A3051) (76374) (Lockheed spec dwg 613540-9) (intchg wth 107-220-104)	1	
	107-220-104	. . CIRCUIT BREAKER, (CB10) 20 Amp SPST miniature (79405) (Lockheed spec dwg 613540-9) (intchg wth MP705)	REF	
-21	MP701	. . CIRCUIT BREAKER, (CB1) 5 Amp SPST miniature (A3051) (76374) (Lockheed spec dwg 613540-1) (intchg wth 107-205-104)	40	

Fuselage Electrical and Electronics

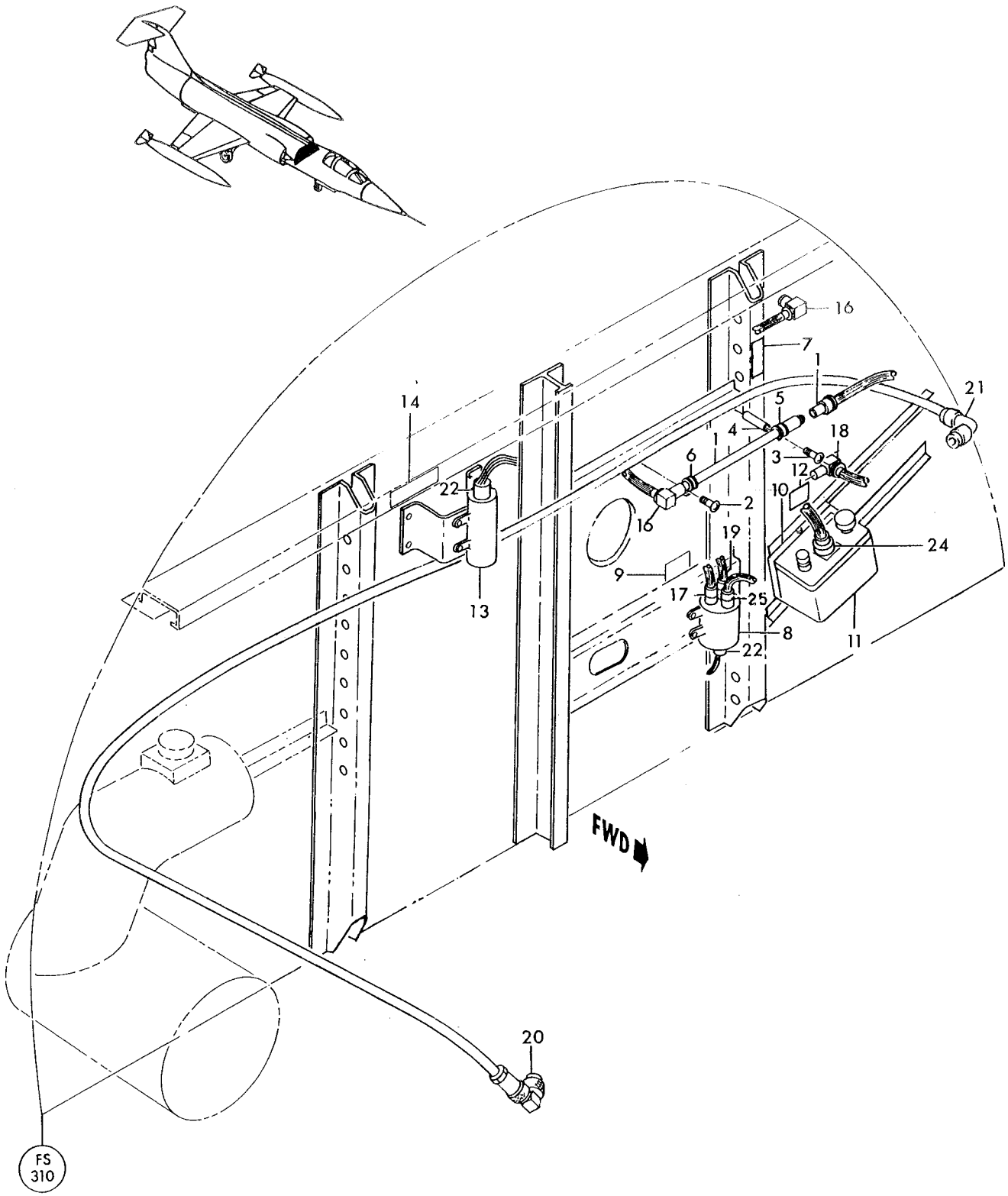

P56-14-20

Figure 181—Electronic Compartment Equipment Aft

Figura e particolare	NDR		DENOMINAZIONE 1 2 3 4 5 6 7	Quant.	Codice applicab.
			ELECTRONIC COMPARTMENT EQUIPMENT AFT		
181	784622-101	.	EQUIPMENT INSTL, electronic compartment fus sta 310 *(see fig. 156 for reqd)*	REF	
- 1	LP557	. .	FILTER, (FL2) low pass (72152) (Lockheed spec dwg 615652-1)	1	
- 2	AN520-10R10	. .	SCREW (88044)	1	
- 3	AN520-10R14	. .	SCREW (88044)	1	
- 4	NAS43DD3-14	. .	SPACER (80205)	1	
- 5	MS21919DG8	. .	CLAMP (loop cushioned) (96906)	1	
- 6	MS21919DG10	. .	CLAMP (loop cushioned) (96906)	1	
- 7	785279-1	. .	DECAL, UHF radio low pass filter	1	
- 8	50575-1	. .	SWITCH, (S3) UHF RF transmission line (82152) (Lockheed spec dwg 615648-103)	1	
			Attaching Parts		
	AN520-10R10	. .	SCREW (88044)	3	
	AN502-10-10	. .	SCREW (88044)	1	
- 9	785366-1	. .	DECAL, UHF RF line switch	1	
-10	D102813	. .	MOUNT, antenna selector (72152) (Lockheed spec dwg 615649-3)	1	
			Attaching Parts		
	AN520-10R12	. .	SCREW (88044)	4	
-11	RY472H	. .	SELECTOR, (S4) antenna (UHF) (72152) (Lockheed spec dwg 615649-7) (see T.O. 12R1-4-18-3)	1	
-12	785369-1	. .	DECAL, UHF radio antenna selector	1	
	784622-3	.	ACCELEROMETER INSTL, electronic compartment fus sta 310 (NHA 849071-101)	1	
-13	724C801P1	. .	ACCELEROMETER, (A5) missile computer (A0084) (89954) (Lockheed spec dwg 615616-1) (see T.O. 11F2-4-10-4)	1	
			Attaching Parts		
	AN520-10R10	. .	SCREW (88044)	4	
-14	785370-1	. .	DECAL, missile computer accelerometer	1	
	790931-1	.	HARNESS ASSY, bhd 310 to low pass filter *(see fig. 156 for reqd)*	REF	6701-6815
	852360-101	.	HARNESS ASSY, bhd 310 to low pass filter *(see fig. 156 for reqd)*	REF	6816-
-16	45-011	. .	CONNECTOR, (P13) plug (low pass filter and bhd 310) (04073)	2	
	Z158	A. .	GRIP (04073)	2	
	785498-1	.	HARNESS ASSY, electronic compartment low pass filter to UHF line switch *(see fig. 156 for reqd)*	REF	6701-6815
	852357-101	.	HARNESS ASSY, electronic compartment low pass filter to UHF line switch *(see fig. 156 for reqd)*	REF	6816-
-17	SC-PL-8	. .	CONNECTOR, (P16) plug (UHF RF line switch) (71468)	1	
	Z158	A. .	GRIP (04073)	1	
-18	UG1185U	. .	CONNECTOR, (P17) plug (low pass filter) (80058)	1	
	Z158	A. .	GRIP (04073)	1	
	847955-101	.	HARNESS ASSY, UHF RF line switch to hatch quick disc. *(see fig. 178 for reqd)*	REF	6701-6815
	852358-101	.	HARNESS ASSY, UHF RF line switch to hatch quick disc. *(see fig. 178 for reqd)*	REF	6816-
-19	SCPL4M8	. .	CONNECTOR, (P15) plug (UHF RF line switch) (71468)	1	
	Z158	A. .	GRIP (04073)	1	
	849668-101	.	HARNESS ASSY, LH P-42 disc. to electronic compartment *(see fig.178 for reqd)*	REF	6701-6740
	849873-101	.	HARNESS ASSY, LH P-42 disc. to electronic compartment *(see fig.178 for reqd)*	REF	6741-
-22	MS25183-10SL3S	. .	CONNECTOR, (P5) plug (missile accelerometer, UHF RF line switch) (96906)	2	
-24	DM9700-19S004	. .	CONNECTOR, (P9) plug (UHF antenna selector) (17419)	1	
-25	UG1185U	.	CONNECTOR, (P17) plug (UHF directional coupler) (80058) *(see fig. 176)*	REF	

A - Reqd per AA.1F-104-OT-797

Fuselage Electrical and Electronics

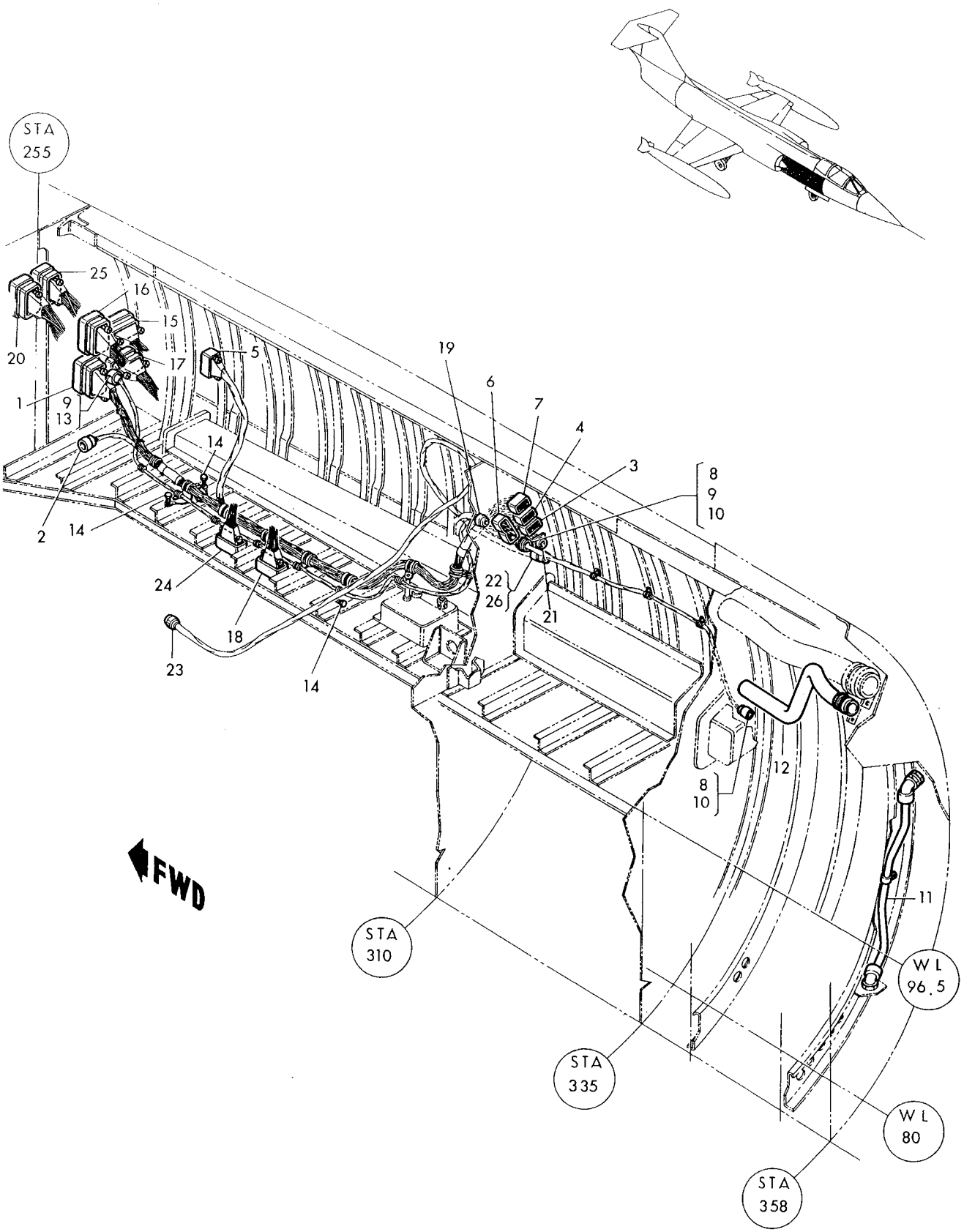

Figure 180–Electronic Compartment Equipment Right Hand

Figura e particolare	NDR	DENOMINAZIONE 1 2 3 4 5 6 7	Quant.	Codice applicab.
		ELECTRONIC COMPARTMENT EQUIPMENT RIGHT HAND		
180	849908-101	. ELECTRICAL INSTL, RH fus sta 255 to 358 wiring and equipment *(see fig. 30 for reqd)*	REF	
	849674-101	. . HARNESS ASSY, RH bhd 255 P-39 disc. to electronic compartment *(see fig. 144, 151 and 154)*	1	6701-6740
	852101-101	. . HARNESS ASSY, RH bhd 255 P-39 disc. to electronic compartment *(see fig. 144, 151 and 154)*	1	6741-
-1	EMRA66PM1A106	. . . CONNECTOR, (P8) plug (P-39 disc.) (81312)	1	
-2	DM9700-7S004	. . . CONNECTOR, (P43) plug (P-129 disc.) (17419)	1	
-3	EMRA20SF2A116G	. . . CONNECTOR, (J128) recp (P-98 disc.) (81312)	1	
-4	EMRA20SM1B106	. . . CONNECTOR, (P52) plug (P-47 disc.) (81312)	1	
-5	EMRA42PM1A106	. . . CONNECTOR, (P57) plug (P-141 disc.) (81312)	1	
-6	EMRA34PF2A116G	. . . CONNECTOR, (J44) recp (P-97 disc.) (81312)	1	
-7	EMRA20PF2A116G	. . . CONNECTOR, (J45) recp (P-45 disc.) (81312)	1	
-8	1284-452	. . RECEPTACLE, (J292) (fus sta 340 and 310) (13556)	2	6701-6740
	849673-101	. . HARNESS ASSY, fus sta 255 to 310 coaxial	1	6701-6740
-9	1211-416	. . . CONNECTOR, (P439) plug (fus sta 255 and 310) (13556)	2	6701-6740
	849672-101	. . HARNESS ASSY, fus sta 310 to 335 coaxial	1	6701-6740
-10	1211-416	. . . CONNECTOR, (P439) plug (fus sta 310 and 335) (13556)	2	6701-6740
-11	784375-3	. . CONDUIT INSTL, inlet anti-icing	1	
-12	850307-103	. . CONDUIT INSTL, RH electrical	1	
-13	1284-452	. . RECEPTACLE, (J292) (fus sta 255) (13556)	1	
-14	NAS1096-3-12	. . SCREW (grd stud) (80205)	3	
	AN936A10	. . WASHER (grd stud) (88044)	3	
	MS35337-43	. . WASHER (grd stud) (96906)	3	
	AN345-10	. . NUT (grd stud) (88044)	3	
	AN960D10	. . WASHER (grd stud) (88044)	3	
	MS21042L3	. . NUT (grd stud) (96906)	3	
	849766-101	. HARNESS ASSY, electronic compartment rack *(see fig. 183 for reqd)*	REF	6701-6740
	849879-101	. HARNESS ASSY, electronic compartment rack *(see fig. 183 for reqd)*	REF	6741-6815
	852288-101	. HARNESS ASSY, electronic compartment rack *(see fig. 183 for reqd)*	REF	6816-
-15	EMRA104PM1A106	. . CONNECTOR, (P32) plug (P-40 disc.) (81312)	1	
-16	EMRA104SM1A106	. . CONNECTOR, (P38) plug (P-38 disc.) (81312)	1	
-17	EMRA104SM1B106	. . CONNECTOR, (P40) plug (P-65 disc.) (81312)	1	
-18	EMRA66PM1A106	. . CONNECTOR, (P8) plug (P-43 disc.) (81312)	1	
	849758-101	. . HARNESS ASSY, electronic compartment rack ARC552 *(see fig. 179 for reqd)*	REF	
-19	DM9700-7P004	. . . CONNECTOR, (P74) plug (P-78 disc.) (17419)	1	
	849617-101	. HARNESS ASSY, P-37 disc. to junction box *(see fig. 182 for reqd)*	REF	6701-6815
	852269-101	. HARNESS ASSY, P-37 disc. to junction box *(see fig. 182 for reqd)*	REF	6816-
-20	EMRA66SM1A106	. . CONNECTOR, (P39) plug (P-37 disc.) (81312)	1	
	849667-101	. HARNESS ASSY, P-32 disc. to 310 bhd *(see fig. 178 for reqd)*	REF	6701-6740
	849872-101	. HARNESS ASSY, P-32 disc. to 310 bhd *(see fig. 178 for reqd)*	REF	6741-6815
	852293-101	. HARNESS ASSY, P-32 disc. to 310 bhd *(see fig. 178 for reqd)*	REF	6816-
-21	DM9606-37S004	. . CONNECTOR, (J12) recp (P-46 disc.) (17419)	1	
	852013-101	. HARNESS ASSY, bhd 310 electronic compt antenna switching unit *(see fig. 156 for reqd)*	REF	
-22	UG1185A/U	. . CONNECTOR, (P17) plug (bhd 310 disc.) (80058)	1	
-23	AVL21-030	. . CONNECTOR, (P14) plug (antenna switching unit) (04073) (Lockheed spec dwg 740516-101)	1	
	Z158	. . GRIP (04073)	2	
	849619-101	. HARNESS ASSY, P-44 disc. to junction box *(see fig. 182 for reqd)*	REF	6701-6765
	851907-101	. HARNESS ASSY, P-44 disc. to junction box *(see fig. 182 for reqd)*	REF	6766-6815
	852416-101	. HARNESS ASSY, P-44 disc. to junction box *(see fig. 182 for reqd)*	REF	6816-
-24	EMRA50-8PM1A106	. . CONNECTOR, (P33) plug (P-44 disc.) (81312)	1	
	849616-101	. HARNESS ASSY, P-36 disc. to junction box *(see fig. 182 for reqd)*	REF	6701-6765
	851906-101	. HARNESS ASSY, P-36 disc. to junction box *(see fig. 182 for reqd)*	REF	6766-
-25	EMRA104SM1A106	. . CONNECTOR, (P38) plug (P-36 disc.) (81312)	1	
-26	UG30E/U	. RECEPTACLE, (P99) (fus sta 310) (80058)	1	

Figura e particolare	NDR	1 2 3 4 5 6 7 DENOMINAZIONE	Quant.	Codice applicab.
179-24	45-011	. . CONNECTOR, (P13) plug (UHF receiver-transmitter) (04073)	1	
	Z158	C. . ADAPTER (96906)	1	
	785501-1	. HARNESS ASSY, IFF receiver-transmitter to antenna switching unit *(see fig. 156 for reqd)*	REF	6701-6815
	852383-101	. HARNESS ASSY, IFF receiver-transmitter to antenna switching unit *(see fig. 156 for reqd)*	REF	6816-
-26	AVL21-030	. . CONNECTOR, (P14) plug (IFF receiver-transmitter) (04073) (Lockheed spec dwg 740516-101)	1	
	Z158	. . GRIP (04073)	1	
	UG212CU	. . ADAPTER, (P46) (80058)	1	
	852015-101	. HARNESS ASSY, tacan RCVR to 184 bhd *(see fig. 159 for reqd)* . . .	REF	
-27	AVL21-040	. . CONNECTOR, (P12) plug (tacan RCVR elec. compt. rack (04073) (Lockheed spec dwg 740517-101)	1	
	Z158	. . GRIP (04073)	1	

A - Only Awx
B - Only FB
C - Reqd per AA.1F-104-OT-797

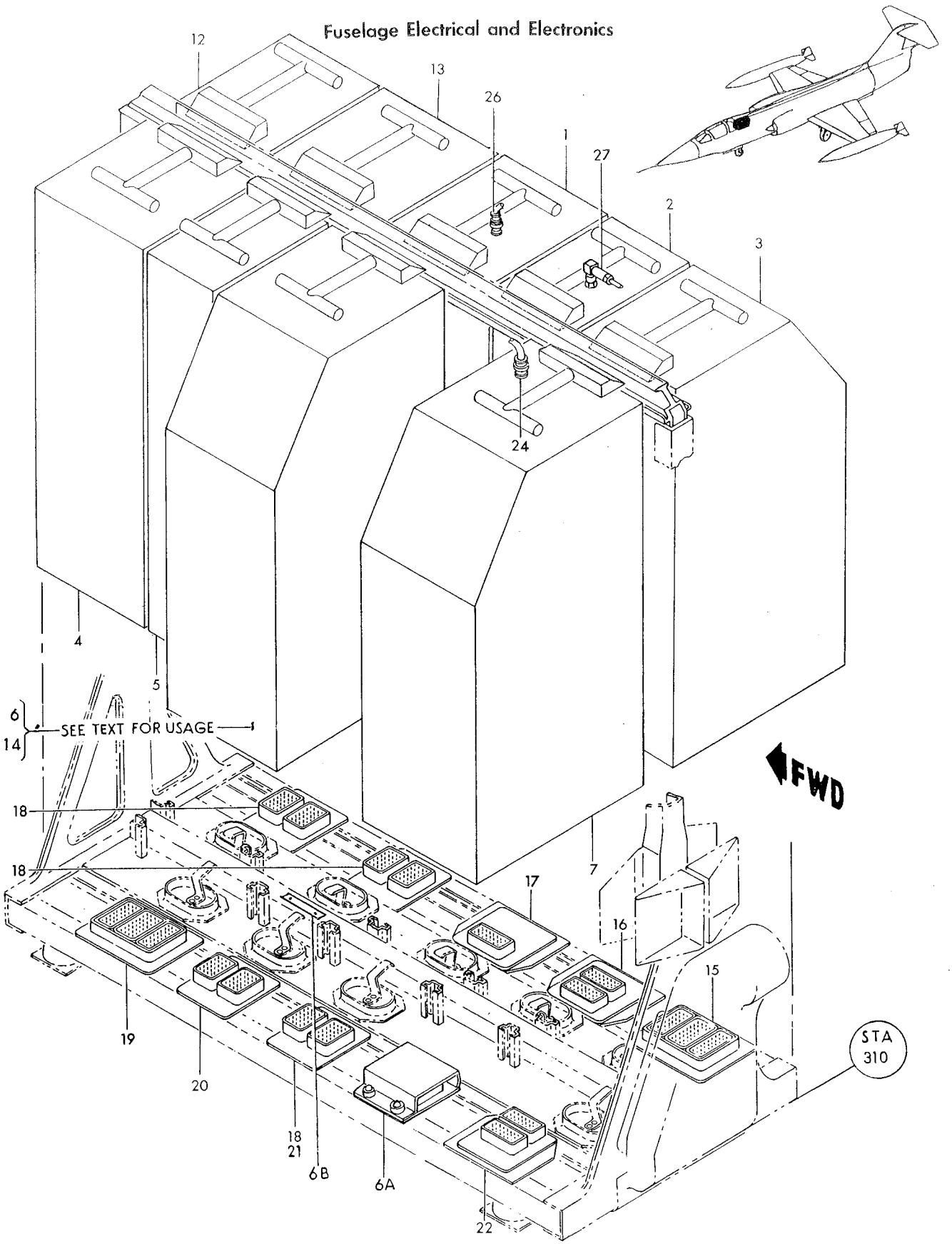

Figure 179— Electronic Compartment Rack Equipment

Figura e particolare	NDR	1	2	3	4	5	6	7	DENOMINAZIONE	Quant.	Codice applicab.
									ELECTRONIC COMPARTMENT RACK EQUIPMENT		
179	850538-101			.					ELECTRONICS INSTL, integrated electronics system (NHA 849070-101) .	1	
	795410-101			.	.				RECEIVER-TRANSMITTER ASSY, IFF radio (APX46)	1	
- 1	110528-2			.	.	.			RECEIVER-TRANSMITTER, (RETR11) IFF radio (A0062) (80249) (Lockheed spec dwg 616278-2) (see LR12-14404-389-4)	1	
- 2	1052207G6			.	.				RECEIVER-TRANSMITTER, (RETR12) tacan radio (A0073) (90348) (Lockheed spec dwg 616217-15) (see T.O. 12R5-4-47-4)	1	
- 3	BG158C5			.	.				COMPUTER, (A1) AFC system (A0019) (94580) (Lockheed spec dwg 620670-101) (see T.O. 5A7-3-6-4)	1	
- 4	630880			.	.				COMPUTER, (A41) inertial navigator (A0000) (06481) (Lockheed spec dwg 620686-103) (see T.O. 5N1-4-3-4)	1	
- 5	510860-16-1			.	.				COMPUTER, (A40) air data (A0076) (70210) (Lockheed spec dwg 620832-101) (see LR12-14404-383-4)	1	6701-6740
	510860-19-1			.	.				COMPUTER, (A40) air data (A0076) (70210) (Lockheed spec dwg 620832-103) (see sep publ whn avail)	1	6741-
- 6	107139A1	A.		.	.				COMPUTER, (A52) AIM-7E (A1615) (Alternate to 261953) (see AA11-128577A1-4) (Lockheed spec dwg 670951-101)	1	
	261953	A.		.	.				COMPUTER, (A52) AIM-7E (49956) (Alternate to 107139A1) (Lockheed spec dwg 670951-101) (see separate publ whn avail)	REF	
- 6A	790222-1			.	.				COVER, electronic compartment rack	1	
- 6B	850966-101	A.		.	.				DECAL, target intercept computer	1	
- 7	522-3097-045			.	.				RECEIVER-TRANSMITTER, (RETR10) UHF radio (A0212) (07216) (Lockheed spec dwg 616235-101) (see T.O. 12R2-4-64-4)	1	
-12	59569-506-1			.					AMPLIFIER ASSY, (AR2) electronic control and calibration (A0084) (94756) (Lockheed spec dwg 670933-103) (see AA11-59569-506-4) *(see fig. 157 for reqd)*	REF	6701-6815
	59569-506-521			.					AMPLIFIER ASSY, (AR2000) electronic control and calibration (A0084) (Aeritalia spec dwg FL6006-105) (see sep bubl whn avail) *(see fig. 157 for reqd)*	REF	6816-
-13	41100-401-11			.					POWER SUPPLY, (A6) low voltage (A0084) (94756) (Lockheed spec dwg 670024-103) (see T.O. 11F33-5-10-4) *(see fig. 157 for reqd)*	REF	6701-6825
	41100-401-501			.					POWER SUPPLY, (A6) low voltage (A0084) (94756) (lookheed spec dwg FL6014-101) (see sep. pub. whn avail.) *(see fig. 157 for reqd)*	REF	6826-
-14	43234-501	B.							COMPUTER, armament control (94756) (Lockheed spec dwg 615597-9) (see T.O. 11F12-14-2-4 and LR11-14404-253-4) (NHA 850191-101)	1	
	849766-101			.					HARNESS ASSY, electronic compartment rack *(see fig. 183 for reqd)* . .	REF	6701-6740
	849879-101			.					HARNESS ASSY, electronic compartment rack *(see fig. 183 for reqd)* . .	REF	6741-6815
	852288-101			.					HARNESS ASSY, electronic compartment rack *(see fig. 183 for reqd)* . .	REF	6816-
-15	18038-1			.	.				CONNECTOR, (P4) plug (AFC system computer) (81312)	1	
	849765-101			.	.				HARNESS ASSY, electronic compartment rack tacan	1	
-16	17148-2			.	.	.			CONNECTOR, (P11) plug (tacan receiver-transmitter) (81312) . .	1	
	849757-101			.	.				HARNESS ASSY, electronic compartment rack APX46	1	
-17	17148-5			.	.	.			CONNECTOR, (P10) plug (APX46 receiver-transmitter) (81312) . .	1	
	849762-101			.	.				HARNESS ASSY, electronic compartment rack nasarr *(see fig. 178)* .	1	6701-6815
	852289-101			.	.				HARNESS ASSY, electronic compartment rack nasarr *(see fig. 178)* .	1	6816-
-18	18054-1			.	.	.			CONNECTOR, (P7) plug (electronic and calibration control, low voltage power supply and armament control computer) (81312) . . .	3	
	849759-101			.	.				HARNESS ASSY, electronic compartment rack inertial navigator system *(see fig. 176 and 178)*	1	
-19	18038-1			.	.	.			CONNECTOR, (P4) plug (inertial navigator computer) (81312) . .	1	
-20	18054-1			.	.				CONNECTOR, (P7) plug (air data computer) (81312)	1	
	849761-101			.	.				HARNESS ASSY, M2 bomb system computer	1	
-21	18054-1			.	.	.			CONNECTOR, (P7) plug (M2 bomb computer) (81312)	1	
	849758-101			.	.				HARNESS ASSY, electronic compartment rack ARC552 *(see fig. 178 and 180)*	1	
-22	17148-2			.	.	.			CONNECTOR, (P11) plug (ARC552 receiver-transmitter) (81312) .	1	
	849763-101			.	.				HARNESS ASSY, electronic compartment rack PHI computer *(see fig. 176)*	1	
	849756-101			.	.				HARNESS ASSY, electronic compartment rack AFC system *(see fig. 178)*	1	
	849760-101			.	.				HARNESS ASSY, electronic compartment rack interconnecting . .	1	6701-6740
	849878-101			.	.				HARNESS ASSY, electronic compartment rack interconnecting . .	1	6741-
	851232-101			.					HARNESS ASSY, UHF receiver-transmitter to UHF directional coupler *(see fig. 156 for reqd)*	REF	6701-6815
	852356-101			.					HARNESS ASSY, UHF receiver-transmitter to UHF RF line switch *(see fig. 156 for reqd)*	REF	6816-

Figura e particolare	NDR	1 2 3 4 5 6 7 DENOMINAZIONE	Quant.	Codice applicab.
178	785501-1	. HARNESS ASSY, IFF receiver-transmitter to antenna switching unit *(see fig. 156 for reqd)*	REF	6701-6815
	852383-101	. HARNESS ASSY, IFF receiver-transmitter to antenna switching unit *(see fig. 156 for reqd)*	REF	6816-
-76	SCPL4M8	. . CONNECTOR, (P15) plug (antenna switching unit) (71468)	1	
	Z158	B. . GRIP (04073)	1	
-77	614D245G2	A. COMPUTER, (A10) missile in-range (A0084) (24446) (Lockheed spec dwg 615624-101) (see T.O. 11F12-16-5-4) *(see fig. 227 for reqd)*	REF	
	852014-101	. HARNESS ASSY, IFF antenna electronic compt antenna switching unit *(see fig. 156 for reqd)*	REF	
-78	AVL21-030	. . CONNECTOR, (P13) plug (IFF antenna lobing switch) (Lockheed spec dwg 740516-101)	1	
	Z158	. . GRIP (04073)	1	
-79	AVL21-030	. CONNECTOR, (P14) plug (antenna switching unit) (04073) (Lockheed spec dwg 740516-1) *(see fig. 180 for reqd)*	REF	
-80	AN5537-3	. CONNECTOR ASSY, (P48) plug (P-80 disc) (88044) *(see fig. 162 for reqd)* .	REF	

A - Only for Awx
B - Reqd per AA.1F-104-OT-797

Figura e particolare	NDR	1 2 3 4 5 6 7 DENOMINAZIONE	Quant.	Codice applicab.
178-49	AN701-1	. . NIPPLE (88044)	4	
	784247-101	. ELECTRONIC AQUIPMENT INSTL, LH fwd electronic compartment (NHA 849071-101)	1	
-50	GG138A1	. . ACCELEROMETER, (A4) normal (A0307) (94580) (Lockheed spec dwg 620678-1)	1	
		Attaching Parts		
	NAS623-3-4	. . SCREW (80205)	4	
		——————*——————		
-51	BG163D2	. . COMPUTER, (A39) automatic pitch control (A0019) (94580) (Lockheed spec dwg 620680-101) (see T.O. 5A7-3-7-4)	1	
		Attaching Parts		
	NAS1096-3-24	. . SCREW (outboard) (80205)	2	
	NAS1096-3-22	. . SCREW (inboard) (80205)	2	
		——————*——————		
	784617-105	. PLATFORM INSTL, inertial navigator (NHA 849070-101)	1	
-52	AN737TW46	. . CLAMP, low pressure air line (88044)	2	
-53	LS4487-5A16	. . HOSE, air duct (36659)	1	
-54	637048	. . PLATFORM, (MP11) inertial navigator (A0000) (06481) (Lockheed spec dwg 620684-107) (see T.O. 5N24-3-4)	1	
		Attaching Parts		
	AN174H10A	. . BOLT (88044)	3	
		——————*——————		
-55	635320	. . ADAPTER, (B46) inertial navigator (A0000) (06481) (Lockheed spec dwg 620709-101) (see T.O. 5N19-3-4)	1	
-56	611649	. . BLANKET, insulating (A0000) (06481) (Lockheed spec dwg 620684-101) (see T.O. 5N24-3-4)	1	
	849766-101	. HARNESS ASSY, electronic compartment rack *(see fig. 183 for reqd)*	REF	6701-6740
	849879-101	. HARNESS ASSY, electronic compartment rack *(see fig. 183 for reqd)*	REF	6741-6815
	852288-101	. HARNESS ASSY, electronic compartment rack *(see fig. 183 for reqd)*	REF	6816-
-57	DM9700-37SX004	. . CONNECTOR, (P26) plug (inertial navigator adapter) (17419)	1	
-58	DM9700-37SY004	. . CONNECTOR, (P27) plug (inertial navigator adapter) (17419)	1	
-59	EMRA104PM1A106	. . CONNECTOR, (P32) plug (P-35 disc.) (81312)	1	
-60	EMRA104SM1A106	. . CONNECTOR, (P38) plug (P-34 disc.) (81312)	1	
-61	EMRA42SM1A106	. . CONNECTOR, (P61) plug (P42 disc.) (81312)	1	
-62	EMRA66PM1A106	. . CONNECTOR, (P8) plug (P-33 disc.) (81312)	1	
	849764-101	. . HARNESS ASSY, P-65 disc. to gyro amplifier	1	
-63	MS3116P16-26S	. . . CONNECTOR, (P2) plug (gyro amplifier) (96906)	1	
-64	PT06P12-8S	. . . CONNECTOR, (P195) plug (transformer) (77820)	1	
	849758-101	. HARNESS ASSY, electronic compartment rack ARC552 *(see fig. 179 for reqd)*	REF	
-65	DM9700-7S004	. . CONNECTOR, (P225) plug (P-28 disc.) (17419)	1	
	849759-101	. HARNESS ASSY, electronic compartment rack inertial navigator system *(see fig. 179 for reqd)*	REF	
-66	MS3116P22-55SW	. . CONNECTOR, (P25) plug (inertial navigator platform) (96906)	1	
-67	MS3116P22-55S	. . CONNECTOR, (P24) plug (inertial navigator platform) (96906)	1	
-68	MS3116P12-10S	. . CONNECTOR, (P23) plug (inertial navigator platform) (96906)	1	
-69	DM9700-37S004	. . CONNECTOR, (P29) plug (inertial navigator adapter) (17419)	1	
-70	MS3116P8-4S	. . CONNECTOR, (P185) plug (P-75 disc.) (96906)	1	
	849756-101	. HARNESS ASSY, electronic compartment rack AFC system *(see fig. 179 for reqd)*	REF	
-71	EMRA66SM1A106	. . CONNECTOR, (P39) plug (P-99 disc.) (81312)	1	
	849762-101	. HARNESS ASSY, electronic compartment rack nasarr *(see fig. 179 for reqd)*	REF	6701-6815
	852289-101	. HARNESS ASSY, electronic compartment rack nasarr *(see fig. 179 for reqd)*	REF	6816-
-72	MS3116P20-39SX	. . CONNECTOR, (P20) plug (missile in-range computer) (96906)	1	
-73	DM9700-37SW004	. . CONNECTOR, (P28) plug (inertial navigator adapter) (17419)	1	
-74	MS3116P14-19P	. . CONNECTOR, (P22) plug (missile in-range computer) (96906)	1	
-75	EMRA42PM1A106	. . CONNECTOR, (P57) plug (P-158 disc.) (81312)	1	
	797444-1	. HARNESS ASSY, low pass filter to bhd 310 *(see fig. 156 for reqd)*	REF	6701-6815
	852380-101	. HARNESS ASSY, low pass filter to bhd 310 *(see fig. 156 for reqd)*	REF	6816-
-75A	UG1185U	. . CONNECTOR, (P17) plug (data link antenna lead and low pass filter) (80058)	2	
	Z158	B. . GRIP (04073)	2	

Figura e particolare	NDR	1 2 3 4 5 6 7 DENOMINAZIONE	Quant.	Codice applicab.
178	AN345-10	NUT (grd stud) (88044)	7	
	AN960D10	WASHER (grd stud) (88044)	7	
	MS21042L3	NUT (grd stud) (96906)	7	
	784247-5	STRUCTURE INSTL, LH fwd electronic compartment	1	6701-6790
	784247-105	STRUCTURE INSTL, LH fwd electronic compartment	1	6791-
-28	795589-1	DECAL, 20 Amp transformer-rectifier	1	
-29	785274-1	DECAL, normal accelerometer	1	
-30	785275-1	DECAL, missile in-range computer	1	
-31	789360-1	DECAL, directional amplifier	1	
-32	798402-101	DECAL, uar propellant temperature control amplifier	1	
-33	785278-1	DECAL, antenna switching unit	1	
-34	785280-1	DECAL, transformer-rectifier	1	
-35	789359-1	DECAL, directional transmitter	1	
-36	786152-1	DECAL, exhaust thermocouple compensating resistor	1	
-37	783946-1	DECAL, automatic pitch control computer	1	
-38	AN5534-2	RESISTOR, (R34) (exhaust temperature) (88044)	1	
		Attaching Parts		
	AN515-8R16	SCREW (88044)	2	
	LS606-10	SPACER, phenolic (36659)	2	
	MS21042L08	NUT (96906)	2	
		✲		
-39	LP267-1A	FILTER, (FL7) low pass (72152) (Lockheed spec dwg 615712-3)	1	
	849555-101	HARNESS ASSY, P-158 and P-166 receptacles to wing fillets	1	
-40	EMRA104SF2A116G	CONNECTOR, (J8) recp (P-166 disc.) (81312)	1	
-41	EMRA42SF2A116G	CONNECTOR, (J296) recp (P-158 disc.) (81312)	1	
	849861-101	HARNESS ASSY, low pass filter to emergency receiver-transmitter *(see fig. 163)*	1	
-42	UG1185U	CONNECTOR, (P17) plug (low pass filter) (80058)	1	
-43	785542-1	PLATE, coaxial cable pressure	1	
		Attaching Parts		
	NAS600-6	SCREW (80205)	4	
	MS21042L04	NUT (96906)	4	
		✲		
-44	785541-1	GASKET, coaxial cable pressure	1	
	784247-3	EQUIPMENT INSTL, LH fwd electronic compartment *(see fig. 156 for reqd)*	REF	
-45	2585422	AMPLIFIER, (AR11) C2G directional gyro compass (A0307) (07187) (Lockheed spec dwg 620813-1) (see T.O. 5N2-2-21-4)	1	
		Attaching Parts		
	NAS623-3-2	SCREW (80205)	4	6701-6765
	NAS623-3-7	SCREW (80205)	4	6766-
		✲		
-46	2585434	TRANSFORMER, (T14) C2G power converter (A0307) (07187) (Lockheed spec dwg 620815-1) (see T.O. 5N2-2-23-3)	1	
		Attaching Parts		
	NAS623-3-2	SCREW (80205)	4	6701-6765
	NAS623-3-7	SCREW (80205)	4	6766-
		✲		
-47	20898	SWITCH UNIT, (S2) antenna (82152) (Lockheed spec dwg 615650-1) (see T.O. 8S3-2-66-3)	1	
		Attaching Parts		
	NAS623-3-5	SCREW (80205)	4	
		✲		
-48	D10250-5	TRANSFORMER-RECTIFIER, (T1) power supply (A0210) (94988) (Lockheed spec dwg 617272-5) (intchg wth P121D and FTRP121D) (see T.O. 8C14-4-10-3)	1	
	P121D	TRANSFORMER-RECTIFIER, (T1) power supply (02859) (Lockheed spec dwg 617272-5) (intchg wth D10250-5 and FTRP121D) (see sep T.O. whn avail)	REF	
	FTRP121D	TRANSFORMER-RECTIFIER, (T1) power supply (02859) (Lockheed spec dwg 617272-5) (intchg wth D10250-5 and P121D) (see sep T.O. whn avail)	REF	
		Attaching Parts		
	NAS623-3-2	SCREW (80205)	4	
		✲		

Fuselage Electrical and Electronics

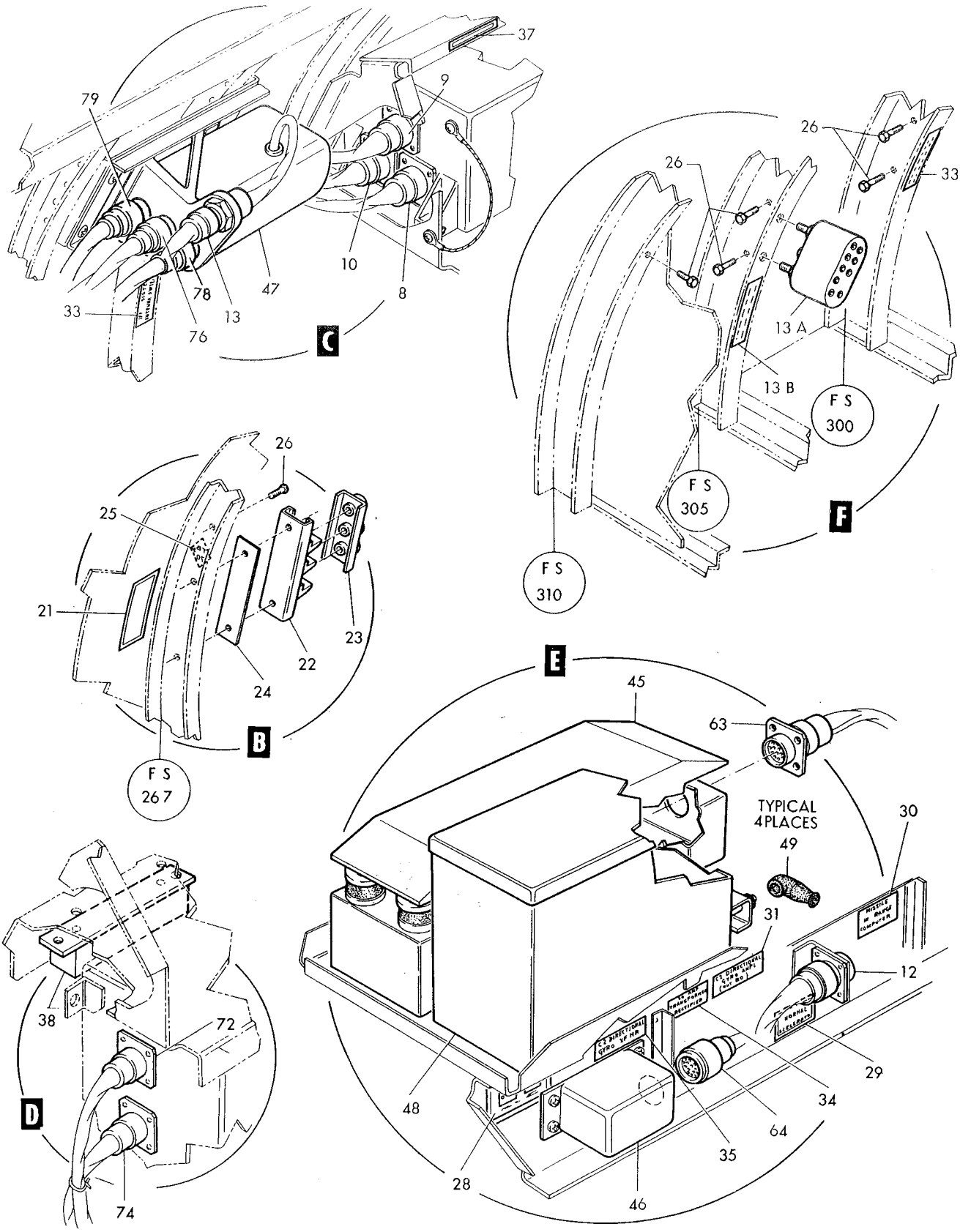

Figure 178–Electronic Compartment Equipment Left Hand (Sheet 2 of 2)

Fuselage Electrical and Electronics

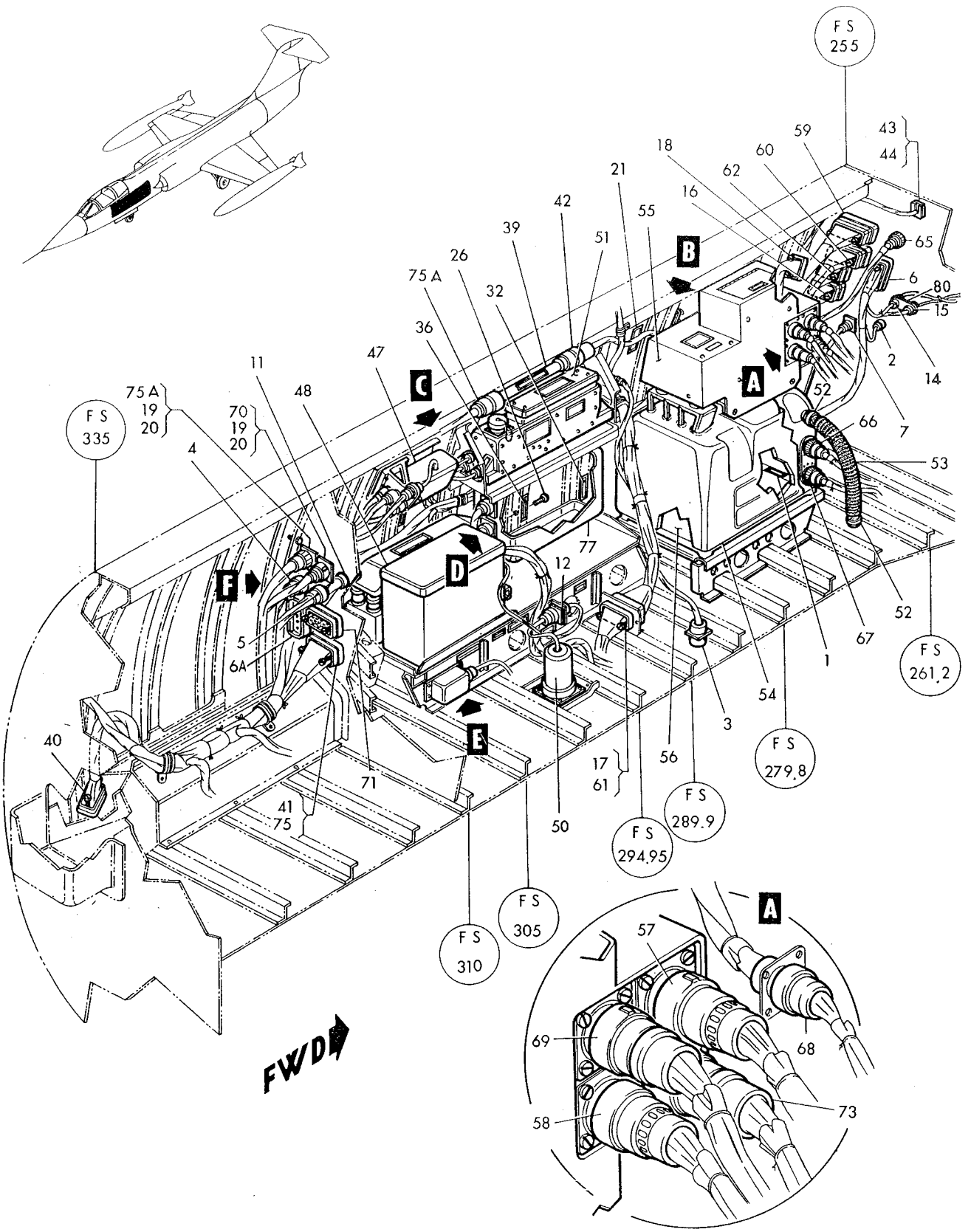

Figure 178–Electronic Compartment Equipment Left Hand (Sheet 1 of 2)

Figura e particolare	NDR	DENOMINAZIONE	Quant.	Codice applicab.
		ELECTRONIC COMPARTMENT EQUIPMENT LEFT HAND		
178	849907-101	ELECTRICAL INSTL, LH fus sta 255 to 358 wiring and equipment *(see fig. 30 for reqd)*	REF	
	784617-3	SUPPORT INSTL, inertial navigator	1	
- 1	785373-1	DECAL, inertial navigator platform and adapter	1	
	847955-101	HARNESS ASSY, UHF RF line switch to hatch quick disc. *(see fig. 181 and 201)*	1	6701-6815
	852358-101	HARNESS ASSY, UHF RF line switch to hatch quick disc. *(see fig. 181 and 201)*	1	6816-
	849671-101	HARNESS ASSY, LH aft bhd 255	1	6701-6740
	849874-101	HARNESS ASSY, LH aft bhd 255	1	6741-6815
	852292-101	HARNESS ASSY, LH aft bhd 255	1	6816-
	849667-101	HARNESS ASSY, P-32 disc. to 310 bhd *(see fig. 100, 176 and 180)*	1	6701-6740
	849872-101	HARNESS ASSY, P-32 disc. to 310 bhd *(see fig. 100, 176 and 180)*	1	6741-6815
	852293-101	HARNESS ASSY, P-32 disc. to 310 bhd *(see fig. 100, 176 and 180)*	1	6816-
- 2	1-670-1	CONNECTOR, (P92) plug (P-121 disc.) (95712)	1	
- 3	MS3103-22-14S	CONNECTOR, (J46) recp (nose wheel well P-13 disc.) (96906)	1	
- 4	DM9606-19S004	CONNECTOR, (J114) recp (P-124 disc.) (17419)	1	
- 5	DM9606-12SW004	CONNECTOR, (J75) recp (P-123 disc.) (17419)	1	
- 6	EMRA34PM1A106	CONNECTOR, (P65) plug (P-125 disc.) (81312)	1	
- 6A	EMRA42SF2A116G	CONNECTOR, (J296) recp (P-170 disc.) (81312)	1	
	849664-101	HARNESS ASSY, automatic pitch control computer	1	6701-6765
	851930-101	HARNESS ASSY, automatic pitch control computer	1	6766-
- 7	DM9606-37S004	CONNECTOR, (J12) recp (P-51 disc.) (17419)	1	
- 8	MS3116P16-8S	CONNECTOR, (P1) plug (automatic pitch control computer) (96906)	1	
- 9	MS3116P16-26P	CONNECTOR, (P190) plug (automatic pitch control computer) (96906)	1	
-10	MS3116P14-12P	CONNECTOR, (P3) plug (automatic pitch control computer) (96906)	1	
-11	DM96906-12S004	CONNECTOR, (J134) recp (P-95 disc.) (17419)	1	
	849665-101	HARNESS ASSY, P-32 disc. to gun purge pressure switch *(see fig. 139 and 148)*	1	
	849668-101	HARNESS ASSY, LH P-42 disc. to electronic compartment *(see fig.181)*	1	6701-6740
	849873-101	HARNESS ASSY, LH P-42 disc. to electronic compartment *(see fig.181)*	1	6741-
-12	MS3112E12-10S	CONNECTOR, (J1) recp (normal accelerometer) (96906)	1	
-13	MS25183-14S5S	CONNECTOR, (P18) plug (antenna lobing switch) (96906)	1	
-13A	RZ0-13-101	RELAY, (K62) antenna lobing. sw divider (R0482)	1	
		Attaching Parts		
	MS35333-36	WASHER (96906)	2	
	1486	WASHER (R0482)	2	
	B6M2,6S03	NUT (R0482)	2	
-13B	852031-101	CHART WIRING, antenna lobing sw divider relay	1	
	849669-101	HARNESS ASSY, thermocouple disc. to bhd 310 splice	1	
-14	AN5537-3-2	CONNECTOR, plug (P-80 disc. bhd 255) (88044)	1	
-15	AN5537-3-1	CONNECTOR, plug (P-80 disc. bhd 255) (88044)	1	
-16	EMRA104PM1A106	CONNECTOR, (P32) plug (P-32 disc.) (81312)	1	
-17	EMRA42PF2A116	CONNECTOR, (J298) recp (P-42 disc.) (81312)	1	
-18	EMRA42PM1106	CONNECTOR, (P265) plug (P-140 disc.) (81312)	1	
-19	CA2120-10	JUNCTION SHELL (71468)	2	
-20	726477-3	GASKET, pressure bhd	2	
-21	786714-1	DECAL, electronic compartment wiring	1	
-22	LS7000A6-3	TERMINAL BLOCK ASSY, electrical (36659)	1	
-23	LS7007-6-3	COVER ASSY, terminal block assy (36659)	1	
		Attaching Parts		
	NAS601-8	SCREW (80205)	2	
	MS21042L06	NUT (96906)	2	
-24	LS7009-6	DECAL, terminal block identification (36659)	1	
-25	LS4998TB73	DECAL, terminal block identification (36659)	1	
-26	NAS1096-3-12	SCREW (grd stud) (80205)	7	
	AN936A10	WASHER (grd stud) (88044)	7	
	MS35337-43	WASHER (grd stud) (96906)	7	

Fuselage Electrical and Electronics

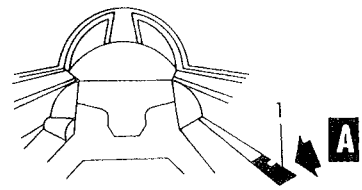

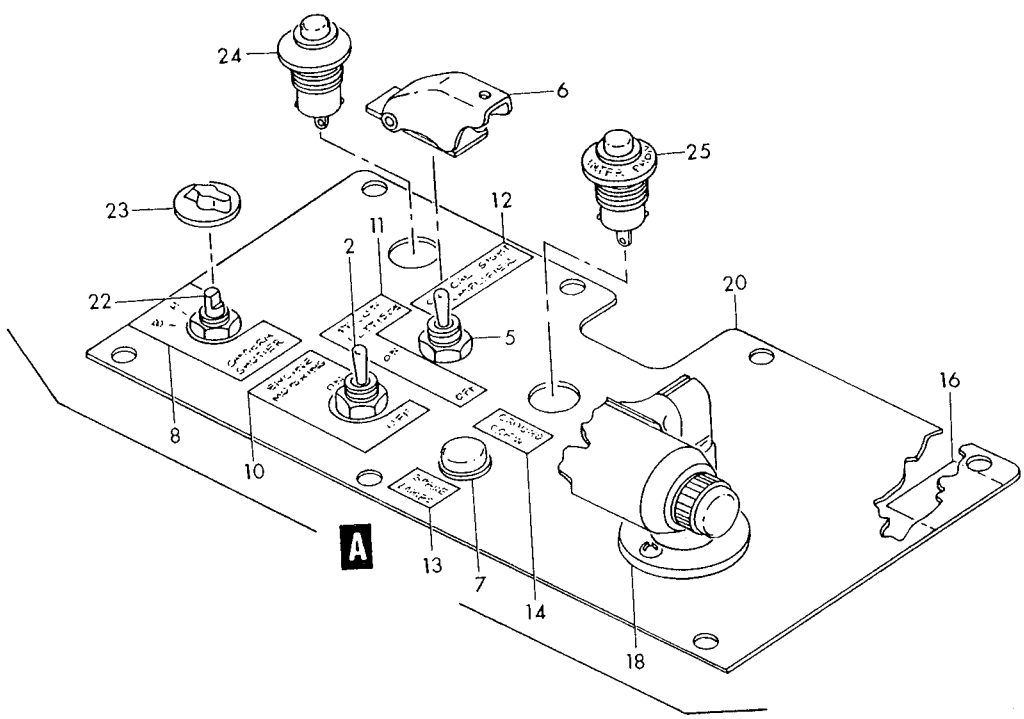

Figure 177—Right Hand Cockpit Switch Panel

Figura e particolare	NDR	DENOMINAZIONE 1 2 3 4 5 6 7	Quant.	Codice applicab.
		RIGHT HAND COCKPIT SWITCH PANEL		
177- 1	785004-505	. PANEL ASSY, RH console switch *(see fig. 163 for reqd)*	REF	
		Attaching Parts		
	PF3 1-2 38	. STUD (72794)	7	
	PS3 1-2	. SPRING (72794)	7	
	PC3 1-2	. CUP (72794)	7	
- 2	MS35059-26	. . SWITCH, (S11) (engine motoring) (96906)	1	
- 5	MS35058-30	. . SWITCH, (S42) (pylon jettison) (96906)	1	
- 6	MS25224-3	. . GUARD (96906)	1	
- 7	MS25261-1	. . LAMPHOLDER (96906)	1	
- 8	785006-1	. . DECAL, camera shutter	1	
-10	763803-7	. . DECAL, engine motoring	1	
-11	785006-9	. . DECAL, pylon jettison	1	
-12	785006-5	. . DECAL, optical sight servo amplifier	1	
-13	763803-4	. . DECAL, spare lamps	1	
-14	785006-3	. . DECAL, grd crew interphone	1	
-16	796179-1	. . DECAL, RH console switch panel	1	
-18	F1051B	. . LIGHT ASSY, (DS86) cockpit spot or flood (A1587) (alternate to 15-0007-21) *(see fig. 164 for reqd)*	REF	
	15-0007-21	. . LIGHT ASSY, (DS86) cockpit spot or flood (72914) (Lockheed spec dwg 618336-9) (alternate to F1051B) *(see fig. 164 for reqd)*	REF	
		Attaching Parts		
	NAS603-8	. . SCREW (80205)	2	
	LS9030-313	. . LAMP, incandescent blue (36659) *(see fig. 164 for reqd)*	REF	
-20	785005-501	. . PLATE ASSY, RH console switch	1	
	849698-101	. HARNESS ASSY, nozzle position indicator to bhd disc. *(see fig. 160 for reqd)*	REF	
-22	24YY2925-3	. . SWITCH, (S121) camera shutter selector (81073) (Lockheed spec dwg 613526-3)	1	
-23	C64969-1	. . KNOB (switch) (06845)	1	
	MS51963-22	. . SCREW (96906)	2	
	849699-101	. HARNESS ASSY, optical sight head to bhd 255 disc. *(see fig. 160 for reqd)*	REF	6701-6765
	852133-101	. HARNESS ASSY, optical sight head to bhd 255 disc. *(see fig. 160 for reqd)*	REF	6766-6815
	852284-101	. HARNESS ASSY, optical sight head to bhd 255 disc. *(see fig. 160 for reqd)*	REF	6816-
-24	W103PB3	. . SWITCH, (S132) (optical sight test) (81640)	1	
	849702-101	. HARNESS ASSY, grd crew interphone to bhd disc. *(see fig. 160 for reqd)*	REF	
-25	W101P4-17	. . SWITCH, (S72) push button (05402) (Lockheed spec dwg 612703-11)	1	

Figura e particolare	NDR	DENOMINAZIONE	Quant.	Codice applicab.
176-56	851263-101	DECAL, LN3 inertial nav. alert align unit	1	
-57	MS3115-20A	RECEPTACLE, dummy (96906)	1	
		Attaching Parts		
	NAS600-6	SCREW (80205)	4	
	MS21042L04	NUT (96906)	4	
		*		
-58	851499-101	DECAL, alert align unit instructions connector	1	
	784086-113	COVER ASSY, electronic compartment *(see fig. 47 for reqd)*	REF	
-60	851260-101	BRACKET, alert align unit mounting	1	
-61	851305-101	BRACKET, alert align unit mounting	1	
-62	851261-101	BRACKET, alert align unit mounting connector	1	
		Attaching Parts		
-63	NAS623-3-1	SCREW (80205)	2	
-64	MS21042L3	NUT (96906)	2	
		*		
	849759-101	HARNESS ASSY, electronic compartment rack inertial navigator system *(see fig. 179 for reqd)*	REF	
-65	MS3110P20-39S	CONNECTOR, (J307) recp (alert align unit) (96906)	1	
	849900-101	ELECTRICAL INSTL, fwd fus (NHA 849141-101) *(see fig. 156 for reqd)*	REF	
	849832-101	HARNESS ASSY, alert align unit jumper	1	
-66	MS3116P20-39P	CONNECTOR, (P461) plug (alert align unit jumper) (96906)	1	
		Attaching Parts		
	NAS600-6	SCREW (80205)	4	
	MS21042L04	NUT (96906)	4	
		*		
-67	MS21919WDG7	CLAMP (96906)	2	
		Attaching Parts		
-68	NAS1096-3-16	SCREW (80205)	1	
-69	NAS1096-3-18	SCREW (80205)	1	
	NAS43DD3-32	SPACER (80205)	1	
	NAS43DD3-40	SPACER (80205)	1	
	AN345-10	NUT (88044)	1	
	MS21042L3	NUT (96906)	2	

A - Reqd per AA.1F-104-OT-797

Figura e particolare	NDR	1 2 3 4 5 6 7 DENOMINAZIONE	Quant.	Codice applicab.
176-32	9302-5964A	RELAY, (K2) DPDT 10 Amp miniature solenoid (A0304) (35344) (Lockheed spec dwg 613683-1) (intchg wth AH23CN460AB)	1	
	AN23CN460AB	RELAY, (K2) DPDT 10 Amp miniature solenoid (72152) (Lockheed spec dwg 613683-1) (intchg wth 9302-5964A)	REF	
		Attaching Parts		
	MS35338-40	WASHER (96906)	4	
	MS20341-4S	NUT (96906)	4	
-33	MS25267A1	RELAY, (K53) (96906)	2	
		Attaching Parts		
	MS21042L06	NUT (96906)	4	6701-6790
	MS35338-41	WASHER (96906)	4	6791-
	MS20341-6S	NUT (96906)	4	6791-
-34	RW20V101	RESISTOR, (R81) 100 Ohm 30 Watt (44655)	1	
-35	RW20V201	RESISTOR, (R83) 200 Ohm 30 Watt (44655)	1	
-36	RW20V151	RESISTOR, (R82) 150 Ohm 30 Watt (44655)	3	
-37	RW20C401	RESISTOR, (R84) 400 Ohm 30 Watt (44655)	1	
		Attaching Parts		
	NAS603-20P	SCREW (80205)	4	
	NAS603-12	SCREW (80205)	3	
	NAS603-14P	SCREW (80205)	1	
	MS21919WDG6	CLAMP (96906)	1	
	MS21042L3	NUT (96906)	8	
-38	MP701	CIRCUIT BREAKER, (CB1) 5 Amp SPST miniature (A3051) (76374) (Lockheed spec dwg 613540-1) (intchg wth 107-205-104)	1	
	107-205-104	CIRCUIT BREAKER, (CB1) 5 Amp SPST miniature (79405) (Lockheed spec dwg 613540-1) (intchg wth MP701)	REF	
-39	MP702	CIRCUIT BREAKER, (CB2) 7.5 Amp SPST miniature (A3051) (76374) (Lockheed spec dwg 613540-3) (intchg wth 107-507-104)	1	
	107-507-104	CIRCUIT BREAKER, (CB2) 7.5 Amp SPST miniature (79405) (Lockheed spec dwg 613540-3) (intchg wth MP702)	REF	
-40	MP703	CIRCUIT BREAKER, (CB4) 10 Amp SPST miniature (A3051) (76374) (Lockheed spec dwg 613540-5) (intchg wth 107-210-104)	4	
	107-210-104	CIRCUIT BREAKER, (CB4) 10 Amp SPST miniature (79405) (Lockheed spec dwg 613540-5) (intchg wth MP703)	REF	
-41	850449-101	DECAL, upper lower and fwd fuselage lights	1	
-42	850451-101	DECAL, tip and stores wing lights	1	
-43	851190-101	DECAL, tail and fus lt transformer	1	
-44	851191-101	DECAL, upper tail lights	1	
-45	851192-101	DECAL, lower tail lights	1	
-46	851189-101	DECAL, wing tip lt transformer	1	
-47	851231-101	DECAL, fwd fus lt and lower tail lt transformer	1	
-48	851233-101	DECAL, navigation lt flashing relay	1	
-49	851234-101	DECAL, navigation lt dimming relay	1	
-50	851235-101	DECAL, wing tip lt control relay	1	
	849581-101	HARNESS ASSY, navigation light relay panel	1	
-51	EMRA20PF2116	CONNECTOR, (J83) recp (P-120 disc) (81312)	1	
-52	MS25183-16S8S	CONNECTOR, plug (flasher disc.) (96906)	1	
	849667-101	HARNESS ASSY, P-32 disc. to 310 bhd *(see fig. 178 for reqd)*	REF	6701-6740
	849872-101	HARNESS ASSY, P-32 disc. to 310 bhd *(see fig. 178 for reqd)*	REF	6741-6815
	852293-101	HARNESS ASSY, P-32 disc. to 310 bhd *(see fig. 178 for reqd)*	REF	6816-
-53	EMRA20SM1106	CONNECTOR, (P76) plug (P-120 disc.) (81312)	1	
	851468-101	ALERT ALIGN UNIT INSTL, electronic compt. cover (NHA 849071-101)	1	
-54	01216	ALERT ALIGN UNIT, (MP13) (09601)	1	
		Attaching Parts		
-55	NAS623-3-2	SCREW (80205)	4	

Fuselage Electrical and Electronics

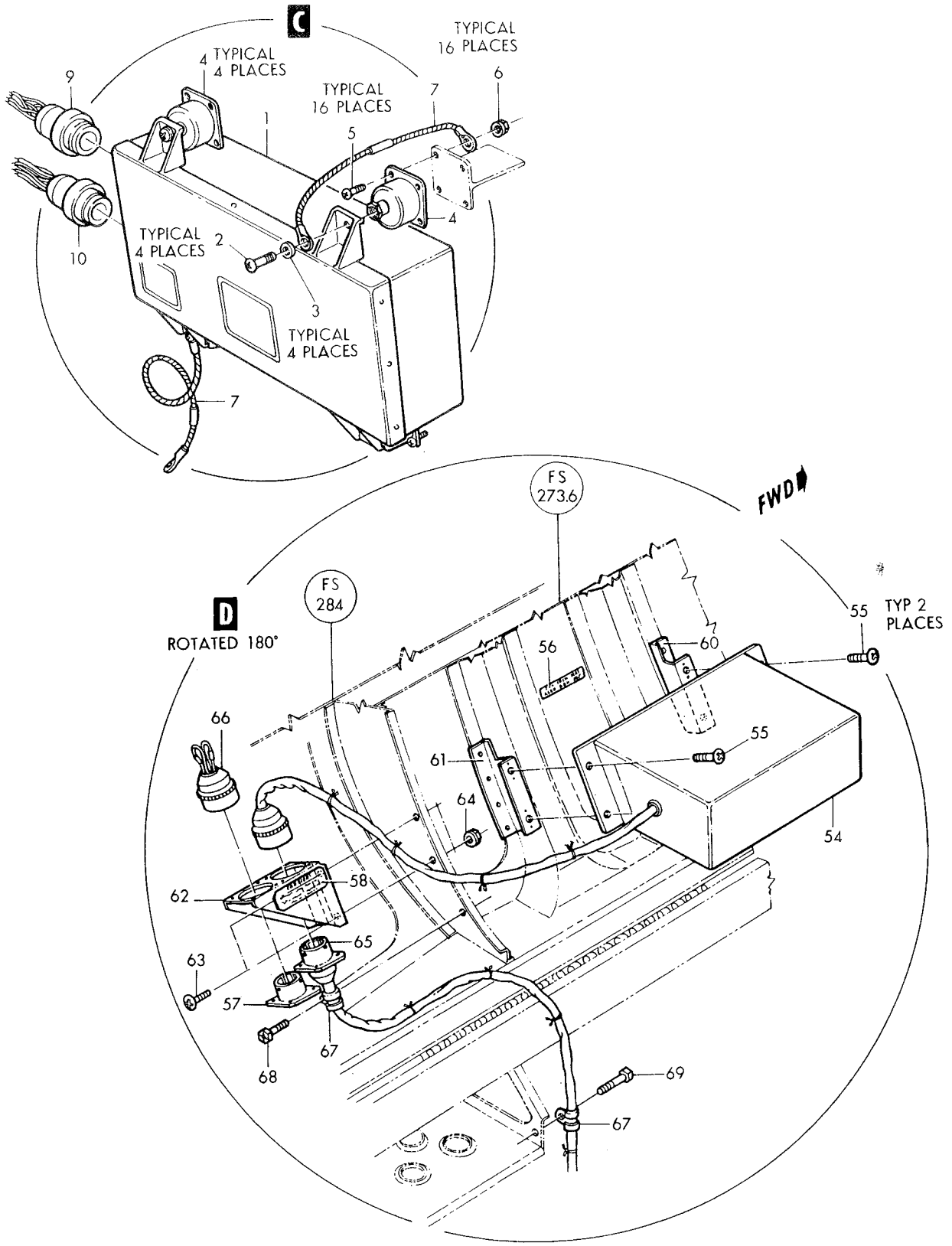

Figure 176-Electronic Compartment Cover Equipment (Sheet 2 of 2)

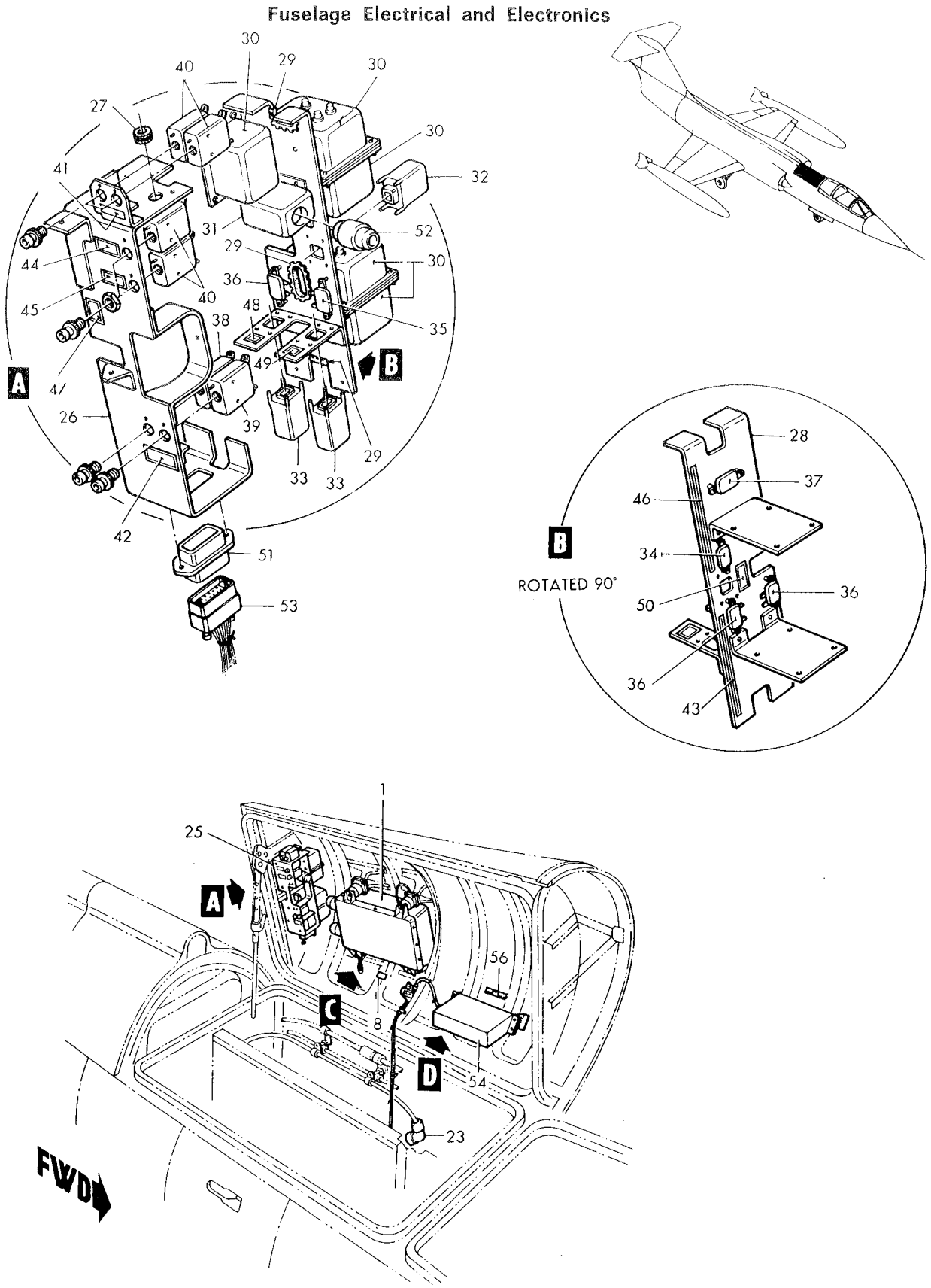

Figure 176-Electronic Compartment Cover Equipment (Sheet 1 of 2)

Figura e particolare	NDR	1 2 3 4 5 6 7 DENOMINAZIONE	Quant.	Codice applicab.
		ELECTRONIC COMPARTMENT COVER EQUIPMENT		
176	784636-101	. COMPUTER INSTL, electronic compartment cover PHI (NHA 849071-101) .	1	
- 1	C0M2M0D1THRU5	. . COMPUTER, (A11) PHI navigation (A1996) (05257) (Lockheed spec dwg 620695-101) (see LR5-14404-226-4)	1	
		Attaching Parts		
- 2	AN520-10R8	. . SCREW (88044)	4	
- 3	AN935-10L	. . WASHER (88044)	4	
		———— * ————		
	784636-3	. SUPPORT INSTL, electronic compartment cover PHI computer *(see fig. 47 for reqd)*	REF	
- 4	90224-2	. . INSULATOR, vibration (81860)	4	
		Attaching Parts		
- 5	NAS623-3-4	. . SCREW (80205)	4	
- 6	MS21042L3	. . NUT (96906)	4	
		———— * ————		
- 7	MS25083-1BB5	. . JUMPER (96906)	2	
- 8	785144-1	. . DECAL, PHI computer	1	
	849763-101	. HARNESS ASSY, electronic compartment rack PHI computer *(see fig. 179 for reqd)*	REF	
- 9	MS3116P22-55P	. . CONNECTOR, (P30) plug (PHI computer) (96906)	1	
-10	MS3116P20-41S	. . CONNECTOR, (P31) plug (PHI computer) (96906)	1	
	851232-101	. HARNESS ASSY, UHF receiver-transmitter to UHF RF line switch *(see fig. 155 for reqd)*	REF	6701-6815
	852356-101	. HARNESS ASSY, UHF receiver-transmitter to UHF RF line switch *(see fig. 156 for reqd)*	REF	6816-
-23	UG1185U	. . CONNECTOR, (P17) plug (UHF RF line switch) (80058)	1	
	Z158	A. . ADAPTER (96906)	1	
	850448-101	. RELAY PANEL INSTL, fus sta 310 navigation lt *(see fig. 156 for reqd)* . .	REF	
	850971-101	. . EQUIPMENT BOX ASSY, navigation light flasher	1	
-25	850971-103	. . . BOX ASSY, navigation light flasher	1	
		Attaching Parts		
	NAS623-3-2	. . . SCREW (80205)	5	6701-6785
	NAS1103-3	. . . SCREW (80205)	5	6786-
	LS881-4	. . . WASHER (36659)	4	
		———— * ————		
-26	850974-101	. . . . BRACKET, navigation light equip panel	1	
-27	MS35489-6	. . . . . GROMMET (96906)	1	
-28	850973-101	. . . . SUPPORT BRACKET, navigation light equip panel	1	
-29	850973-115	. . . . . GROMMET	3	
		Attaching Parts		
	NAS1203-2	. . . . SCREW (80205)	2	
	NAS623-3-2	. . . . SCREW (80205)	4	
		———— * ————		
-30	R41	. . . AUTO TRANSFORMER, (T22) single phase (A2836) (alternate to 11406)	5	
	11406	. . . AUTO TRANSFORMER, (T22) single phase (83008) (Lockheed spec dwg 740410-101) (alternate to R41)	REF	
		Attaching Parts		
	NAS603-8	. . . SCREW (80205)	8	
	NAS514P1032-6	. . . SCREW (80205)	4	
	MS21042L3	. . . NUT (96906)	12	
		———— * ————		
-31	FPL10-01	. . . FLASHER, (DS109) 115 VAC position light 40 CPM periodic (A2829) (alternate to R7623)	1	
	R7623	. . . FLASHER, (DS109) 115 VAC position light 40 CPM periodic (00712) (Lockheed spec dwg 740413-101) (alternate to FPL10-01) . .	REF	
		Attaching Parts		
	NAS602-8	. . . SCREW (80205)	3	
	MS21042L08	. . . NUT (96906)	3	
		———— * ————		

Figura e particolare	NDR	1 2 3 4 5 6 7 DENOMINAZIONE	Quant.	Codice applicab.
175-32	MP702	. . CIRCUIT BREAKER, (CB2) 7.5 Amp SPST miniature (A3051) (76374) (Lockheed spec dwg 613540-3) (intchg wth 107-507-104)	2	
	107-507-104	. . CIRCUIT BREAKER, (CB2) 7.5 Amp SPST miniature (79405) (Lockheed spec dwg 613540-3) (intchg wth MP702)	REF	
-32A	MP701	. . CIRCUIT BREAKER, (CB1) 5 Amp SPST miniature (A3051) (76374) (Lockheed spec dwg 613540-1) (intchg wth 107-205-104)	3	
	107-205-104	. . CIRCUIT BREAKER, (CB1) 5 Amp SPST miniature (79405) (Lockheed spec dwg 613540-1) (Intchg wth MP701)	REF	
-34	785817-1	. . PLATE, AC load center	4	
-35	851188-101	. . DECAL, AC load center	1	
-37	761059-7	. . DECAL, AC load center emergency dc power	1	
-38	783795-1	. . DECAL, AC load center auxiliary transfer pump	1	
-39	9973-7-5	. . CIRCUIT BREAKER, (CB14) 3PST 7.5 Amp magnetic trip free (A0299) (alternate to 74-648-7-5-6)	1	
	74-648-7-5-6	. . CIRCUIT BREAKER, (CB14) 3PST 7.5 Amp magnetic trip free (74193) (Lockheed spec dwg 613415-4) (alternate to 9973-7-5)	REF	
-40	761059-9	. . DECAL, AC load center fuel booster pumps No. 1, 2, 3 and 4 . . .	1	
-41	R4G	. . RING, camloc snap (71286)	7	
-42	4002G	. . GROMMET, camloc (71286)	7	
-43	4002-2	. . STUD, camloc (71286)	7	
-44	773863-3	. . SPOTWELD ASSY, AC load center door	1	
	849640-101	. HARNESS ASSY, ammunition compartment splice to AC load center *(see fig. 156 for reqd)*	REF	
-45	MS25041-8	. . LIGHT, (DS18) (fuel pump test) (96906)	1	
	LS9030-327	. . LAMP, incandescent blue (36659)	1	

Fuselage Electrical and Electronics

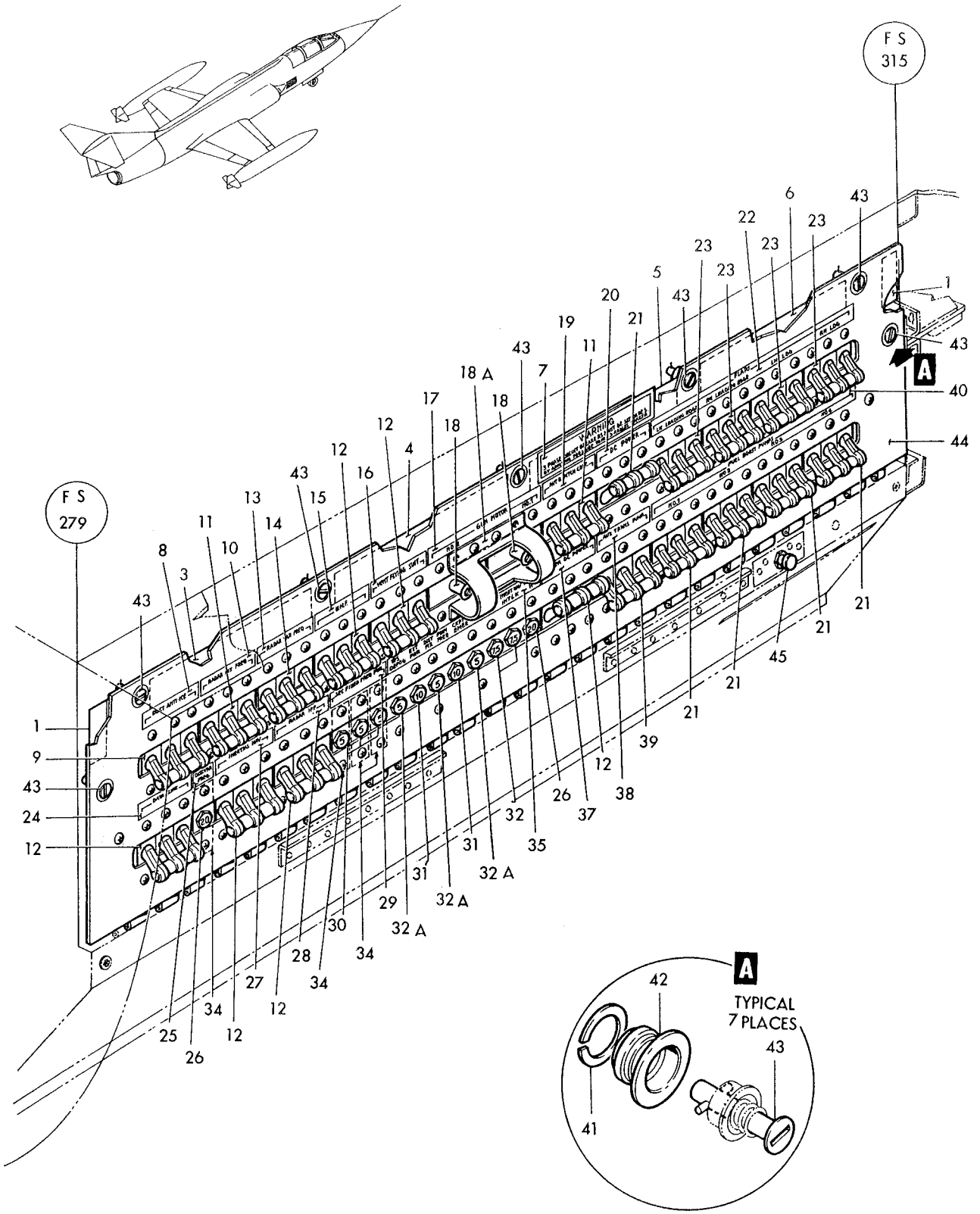

Figure 175–Electrical Load Center Door Panel

Figura e particolare	NDR	DENOMINAZIONE	Quant.	Codice applicab.
		ELECTRICAL LOAD CENTER DOOR PANEL		
175	851187-101	DOOR ASSY, AC load center *(see fig. 173 for reqd)*	REF	
-1	764534	DECAL, danger high voltage warning	2	
-3	851279-101	DECAL, AC load center lower aft circuit breaker	1	
-4	851278-101	DECAL, AC load center aft circuit breaker	1	
-5	799938-101	DECAL, AC load center fwd circuit breaker	1	
-6	786079-1	DECAL, AC load center emergency power and fuel pump	1	
-7	767099-1	DECAL, AC load center circuit breaker warning	1	
-8	783800-1	DECAL, AC load center duct anti-ice	1	
-9	9973-50	CIRCUIT BREAKER, (CB13) 3PST 50 Amp magnetic trip free (A0299) alternate to 74-648-50-6)	1	
	74-648-50-6	CIRCUIT BREAKER, (CB13) 3PST 50 Amp magnetic trip free (74193) (Lockheed spec dwg 613415-8) (alternate to 9973-50)	REF	
-10	783799-1	DECAL, AC load center radar fixed frequency	1	
-11	9973-2-5	CIRCUIT BREAKER, (CB19) 3PST 2.5 Amp magnetic trip free (A0299) (alternate to 74-648-2.5-6)	2	
	74-648-2.5-6	CIRCUIT BREAKER, (CB19) 3PST 2.5 Amp magnetic trip free (74193) (Lockheed spec dwg 613415-2) (alternate to 9973-2-5)	REF	
-12	9973-5	CIRCUIT BREAKER, (CB16) 3PST 5 Amp magnetic trip free (A0299) (alternate to 74-648-5-6)	6	
	74-648-5-6	CIRCUIT BREAKER, (CB16) 3PST 5 Amp magnetic trip free (74193) (Lockheed spec dwg 613415-9) (alternate to 9973-5)	REF	
-13	784763-1	DECAL, AC load center radar variable frequency	1	
-14	9973-10	CIRCUIT BREAKER, (CB17) 3PST 10 Amp magnetic trip free (A0299) (alternate to 74-648-10-6)	1	
	74-648-10-6	CIRCUIT BREAKER, (CB17) 3PST 10 Amp magnetic trip free (74193) (Lockheed spec dwg 613415-5) (alternate to 9973-10)	REF	
-15	768396-1	DECAL, AC load center UHF	1	
-16	783798-1	DECAL, AC load center ventilated flying suit	1	
-17	784768-1	DECAL, AC load center gun motor power	1	
-18	MS21984-35	CIRCUIT BREAKER, (CB34) 35 Amp 3 phase push trip free (96906)	2	
-18A	851280-101	GUARD, gun motor circuit breaker	1	
-19	784458-1	DECAL, AC load center automatic pitch control	1	
-20	761059-5	DECAL, AC load center DC power	1	
-21	9973-15	CIRCUIT BREAKER, (CB11) 3PST 15 Amp magnetic trip free (A0299) (alternate to 74-648-15-6)	1	
	74-648-15-6	CIRCUIT BREAKER, (CB11) 3PST 15 Amp magnetic trip free (74193) (Lockheed spec dwg 613415-11) (alternate to 9973-15)	REF	
-22	761059-10	DECAL, AC load center flaps	1	
-23	9973-12-5	CIRCUIT BREAKER, (CB15) 3PST 12.5 Amp magnetic trip free (A0299) (alternate to 74-648-12-5-6)	4	
	74-648-12-5-6	CIRCUIT BREAKER, (CB15) 3PST 12.5 Amp magnetic trip free (74193) (Lockheed spec dwg 613415-6) (alternate to 9973-12-5)	REF	
-24	785816-1	DECAL, AC load center (data link)	1	
-25	784920-1	DECAL, AC load center distribued variable frequency	1	
-26	MP705	CIRCUIT BREAKER, (CB10) 20 Amp SPST miniature (A3051) (76374) (Lockheed spec dwg 613540-9) (intchg wth 107-220-104)	2	
	107-220-104	CIRCUIT BREAKER, (CB10) 20 Amp SPST miniature (79405) (Lockheed spec dwg 613540-9) (intchg wth MP705)	REF	
-27	783793-1	DECAL, AC load center inertial navigator	1	
-28	768397-1	DECAL, AC load center radar IFF	1	
-29	783796-1	DECAL, AC load center secondary fixed frequency power	1	
-30	MP701	CIRCUIT BREAKER, (CB1) 5 Amp SPST miniature (A3051) (76374) (Lockheed spec dwg 613540-1) (intchg wth 107-205-104	3	
	107-205-104	CIRCUIT BREAKER, (CB1) 5 Amp SPST miniature (79405) (Lockheed spec dwg 613540-1) (intchg wth MP701)	REF	
-31	MP703	CIRCUIT BREAKER, (CB4) 10 Amp SPST miniature (A3051) (76374) (Lockheed spec dwg 613540-5) (intchg wth 107-210-104)	2	
	107-210-104	CIRCUIT BREAKER, (CB4) 10 Amp SPST miniature (79405) (Lockheed spec dwg 613540-5) (intchg wth MP703)	REF	

Figura e particolare	NDR	1 2 3 4 5 6 7	DENOMINAZIONE	Quant.	Codice applicab.
174-81	MS21042L3	. .	NUT (96906)	4	
			——————✲——————		
	TA10034D18-24	. .	CLAMP (84971)	1	
	TA10036WD24	. .	CLAMP (84971)	1	
-82	851091-101	A. .	SUPPORT, fus sta 249 waveguide mtg	1	
			Attaching Parts		
-83	NAS623-3-3	. .	SCREW (80205)	5	
-84	MS21042L3	. .	NUT (96906)	5	
			——————✲——————		
	TA10034D10-31	. .	CLAMP (84971)	4	
	TA10036WD31	. .	CLAMP (84971)	4	
-85	851089-101	A. .	SUPPORT, fus sta 232 waveguide mtg	1	
			Attaching Parts		
-86	NAS623-3-4	. .	SCREW (80205)	5	
-87	MS21042L3	. .	NUT (96906)	5	
			——————✲——————		
-88	93724	. .	SEAL (05802)	1	
			Attaching Parts		
-89	NAS602-8	. .	SCREW (80205)	4	
-90	LS9660C8	. .	WASHER (36659)	4	
-91	AN935-8L	. .	WASHER, lock (88044)	4	
-92	NAS623-3-2	. .	SCREW (80205)	6	
-93	MS21042L3	. .	NUT (96906)	6	
			——————✲——————		
-94	851101-101	. .	SUPPORT, fus sta 212 waveguide mtg	1	
			Attaching Parts		
-95	NAS623-3-2	. .	SCREW (80205)	2	
-96	NAS603-6	. .	SCREW (80205)	2	
			——————✲——————		
-97	851098-101	. .	SUPPORT, fus sta 195 waveguide mtg	1	
			Attaching Parts		
-98	NAS623-3-2	. .	SCREW (80205)	2	
-99	NAS603-6	. .	SCREW (80205)	2	
			——————✲——————		

A - Only for Awx
B - Only for FB
C - Removed per AA.1F-104S-OT-127
D - Reqd per AA.1F-104S-OT-127
E - Removed per AA.1F-104S-OT-155
F - Reqd per AA.1F-104S-OT-155

Figura e particolare	NDR	1	2	3	4	5	6	7	DENOMINAZIONE	Quant.	Codice applicab.
174-48A	CA3100ER10SL4P			.	.				CONNECTOR, (J69) recp (No. 1 battery disc.) (71468)	1	
	849642-101			.					HARNESS ASSY, fwd end circuit breaker door *(see fig. 156 for reqd)*	REF	6701-6765
	852143-101			.					HARNESS ASSY, fwd end circuit breaker door *(see fig. 156 for reqd)*	REF	6766-
-48B	CA3100ER10SL4P			.	.				CONNECTOR, (J69) recp (No. 2 battery disc.) (71468)	1	
	849634-101			.					HARNESS ASSY, generator underfrequency relay *(see fig. 156 for reqd)*	REF	
-49	767030-1			.	.				CONNECTOR, (P141) plug (generator No. 1 and No. 2 underfrequency relays)	2	
	849660-101			.					HARNESS ASSY, P-66 disc. to splice *(see fig. 156 for reqd)*	REF	6701-6815
	852274-101			.					HARNESS ASSY, P-66 disc. to splice *(see fig. 156 for reqd)*	REF	6816-
-50	M5757-22-001			.	.				RELAY, (K61) AIM-7E gen control delay (81349) (alternate to FL0428-101)	1	
	FL0428-101			.	.				RELAY, (K61) AIM-7E gen control delay (A0019) (alternate to M5757-22-001)	REF	
									Attaching Parts		
-51	NAS601-8P			.					SCREW (80205)	3	
	MS21042L06			.					NUT (96906)	3	
-52	CA3108ER16S8S			.	.				CONNECTOR, (P269) plug (AIM-7E gen overvoltage relay) (71468)	1	
-53	CA3108ER20-27S			.	.				CONNECTOR, (P292) plug (AIM-7E gen control relay) (71468)	1	
	851102-101			.					WAVEGUIDE INSTL, fus sta 184 to klystron transmitter (NHA 849138-101)	1	
-54	851099-101		A.	.					SUPPORT, fus sta 317 waveguide	1	
-55	851094-101		A.	.					CLAMP, waveguide	1	
-56	851096-101		A.	.					SPACER, waveguide	1	
									Attaching Parts		
-57	NAS1203-10			.	.				SCREW (80205)	2	
-58	NAS623-3-24			.	.				SCREW (80205)	2	
-59	MS21042L3			.	.				NUT (96906)	4	
-60	AN929-4			.	.				CAP ASSY (88044)	1	
-61	740383-103		A.	.					WAVEGUIDE ASSY (F1598)	1	
-62	851097-101		A.	.					SHIM, adjustable waveguide mtg	1	
-63	NAS603-12			.	.				SCREW (80205)	2	
-64	740383-105			.	.				WAVEGUIDE ASSY (F1598)	1	
	851102-105			.	.				PRINTED COPY OF DWG 851102	1	
-64A	851230-101		B.	.					COVER, waveguide	1	
	851102-103			.					WAVEGUIDE BRKT INSTALLATION, sta 184 to klystron transmitter *(see fig. 30 for reqd)*	REF	
-65	851095-101		A.	.					FITTING, waveguide mtg	1	
-66	TA519D10-18			.	.				CLAMP (84971)	1	
-67	NAS603-6			.	.				SCREW (80205)	1	
-68	851090-101		A.	.					BRACKET, waveguide mounting	1	
									Attaching Parts		
-69	NAS603-10			.	.				SCREW (80205)	3	
-70	NAS603-6			.	.				SCREW (80205)	2	
	TA10034D10-31			.	.				CLAMP (84971)	1	
	TA10036WD31			.	.				CLAMP (84971)	1	
-71	851092-101		A.	.					FITTING, waveguide mtg	1	
-72	851097-103		A.	.					SHIM	1	
									Attaching Parts		
-73	NAS603-12			.	.				SCREW (80205)	2	
-74	851093-101		A.	.					PLATE, waveguide	1	
-75	851238-101		A.	.					SHIM, adjustable waveguide mounting	1	
									Attaching Parts		
-76	NAS623-3-6			.	.				SCREW (80205)	2	
-77	NAS603-6			.	.				SCREW (80205)	2	
	TA10034D10-31			.	.				CLAMP (84971)	1	
	TA10036WD31			.	.				CLAMP (84971)	1	
-78	851100-101		A.	.					BRACKET, fus sta 255 waveguide support	1	
									Attaching Parts		
-79	NAS623-3-4			.	.				SCREW (80205)	2	
-80	NAS623-3-3			.	.				SCREW (80205)	2	

Figura e particolare	NDR	1	2	3	4	5	6	7	DENOMINAZIONE	Quant.	Codice applicab.
174-37	9309-5965A								RELAY, (K1) 4PDT 10 Amp miniature solenoid (A0304) (35344) (Lockheed spec dwg 613684-1) (intchg wth AH43CR460AB)	2	
	AH43CR460AB								RELAY, (K1) 4PDT 10 Amp miniature solenoid (72152) (Lockheed spec dwg 613684-1) (intchg wth 9309-5965A)	REF	
									Attaching Parts		
	AN960D4								WASHER (88044)	4	
	MS35338-40								WASHER (96906)	4	
	MS20341-4S								NUT (96906)	4	
	850162-101								RELAY INSTL, ram air turbine compt hyd generator	1	
-38	9259-83S								RELAY, (K32) armature 3PDT (35344) (Lockheed spec dwg 613287)	1	
									Attaching Parts		
	AN520-10R8								SCREW (88044)	4	
	AN960-10L								WASHER (88044)	4	
-39	250690-9A		E.						RELAY, (K33) frequency and voltage controlled armature (A0210) (250690-9B is subtl sub)	1	6701-6753
	250690-9B		F.						RELAY, (K33) frequency and voltage controlled armature (A0210) (subtl sub for 250690-9A) (intch wth RY580A1 and RY580A2)	1	
	RY580A2		F.						RELAY, (K33) frequency and voltage controlled armature (72152) (Lockheed spec dwg 613690-9) (intchg wth RY580A1 and 250690-9B)	REF	
	RY580A1		F.						RELAY, (K33) frequency and voltage controlled armature (72152) (Lockheed spec dwg 613690-9) (intchg wth RY580A2 and 250690-9B)	REF	
									Attaching Parts		
	AN520-10R8								SCREW (88044)	4	
	AN960-10L								WASHER (88044)	4	
-40	1256-5								RELAY, (K49) hermetically sealed overvoltage time delay (03972) (Lockheed spec dwg 613737-5)	1	
									Attaching Parts		
	AN515-8R8								SCREW (88044)	4	
	AN960D8								WASHER (88044)	4	
-41	787578-1								DECAL, hydraulic generator relay	1	
-42	849956-101								DECAL, AIM-7N fixed freq overvoltage relay	1	
-43	849957-101								DECAL, AIM-7N hydraulic generator sensor relay	1	
-44	851218-101								CHART, rat compt relays wiring	1	
	850969-101								EQUIP ASSY, AIM-7N power relays	1	
-45	851217-101								SUPPORT, AIM-7N inlet doors relays	1	
									Attaching Parts		
	NAS603-8								SCREW (80205)	3	
	MS21042L3								NUT (96906)	2	6766-
	AN520-10R6								SCREW (88044)	4	
-46	9309-5965A								RELAY, (K1) 4PDT 10 Amp miniature solenoid (A0304) (35344) (Lockheed spec dwg 613684-1) (intchg wth AH43CR460AB)	4	
	AH43CR460AB								RELAY, (K1) 4PDT 10 Amp miniature solenoid (72152) (Lockheed spec dwg 613684-1) (intchg wth 9309-5965A)	REF	
-47	9302-5964A								RELAY, (K2) DPDT 10 Amp solenoid (A0304) (35344) (Lockheed spec dwg 613683-1) (intchg wth AH23CN460AB)	1	
	AH23CN460AB								RELAY, (K2) DPDT 10 Amp solenoid (72152) (Lockheed spec dwg 613683-1) (intchg wth 9302-5964A)	REF	
									Attaching Parts		
	AN960D4								WASHER (88044)	4	
	MS35338-40								WASHER (96906)	4	
	MS20341-4S								NUT (96906)	4	
-48	851229-101								CHART, AC load center relays wiring	1	
	849645-101								HARNESS ASSY, P-44 receptacle to load center *(see fig. 156 for reqd)*	REF	6701-6765
	851910-101								HARNESS ASSY, P-44 receptacle to load center *(see fig. 156 for reqd)*	REF	6766-

Figura e particolare	NDR	DENOMINAZIONE	Quant.	Codice applicab.
174-13	20B97-1A	REGULATOR, (VR2000) amplifier voltage (A2547) (see T.O. 8A16-53-4)	1	
	776877-103	BATTERY INSTL, AC load center (NHA 849070-101)	1	
	776871-105	RACK ASSY, battery mounting	2	
		Attaching Parts		
	NAS1103-3	BOLT (80205)	2	
		*		
-13A	852006-101	HARNESS ASSY, battery quick disc.	1	
-14	CA3106ER10SL4S	CONNECTOR, (P6) plug (battery quick disc.) (71468)	1	
-15	MA300H	BATTERY, (BT1) 28 V DC 3.6 Amp-hour nickel-cadmium aircraft electrical storage (55933) (Lockheed spec dwg 613583-1) (see T.O. 8D2-3-4) (alternate to W18241)	1	
	W18241	BATTERY, (BT1) 28 V DC 3.6 Amp-hour nickel-cadmium aircraft electrical storage (Lockheed spec dwg 613583-1) (D9722) (see sep T.O. whn avail) (alternate to MA300H)	REF	
		Attaching Parts		
	NAS517-3-3	SCREW (80205)	8	
	AN960D10	WASHER (88044)	8	
	MS21042L3	NUT (96906)	8	
		*		
	776871-3	BRACKET, battery mounting	1	
	849906-101	ELECTRICAL INSTL, RH electrical bay *(see fig. 30 for reqd)*	REF	
	776877-3	STRUCTURE INSTL, AC load center	1	
	781085-1	PANEL ASSY, AC load center	1	
-16	776945-1	DECAL, battery No. 2	1	
	775918-503	RACK ASSY, frequency sensors	1	
	775918-23	ANGLE ASSY, frequency sensors	1	
-17	788304-1	BRACKET, battery disc. recp	1	
-18	776944-1	DECAL, battery No. 1	1	
-19	768383-1	DECAL, underfrequency relay generator No. 1	1	
-20	768384-1	DECAL, underfrequency relay generator No. 2	1	
-21	776944-1	DECAL, battery No. 1	1	
-22	776945-1	DECAL, battery No. 2	1	
-23	761059-12	DECAL, generator No. 1 voltage regulator	1	
-24	761059-13	DECAL, generator No. 2 voltage regulator	1	
-25	764534	DECAL, high voltage warning	1	
-26	760978	STUD, inverter mounting	6	
-27	778294-1	STUD, inverter mounting	2	
	AN960D10	WASHER (88044)	8	
	MS21042L3	NUT (96906)	8	
	852137-101	HARNESS ASSY, P-27 disc. to AC load center *(see fig. 136 and 160)*	1	
-28	EMRA75SF2A116	CONNECTOR, (J14) recp (P-27 disc.) (81312)	1	
-29	1-670-1	CONNECTOR, (P92) plug (P-130 disc.) (95712)	1	
-30	EMRA34SF2A116	CONNECTOR, (J22) recp (P-138 disc.) (81312)	1	
-31	NAS557-22A	GROMMET (80205)	1	
-32	MS35489-2	GROMMET (96906)	1	
-33	NAS1096-3-12	SCREW (grd stud) (80205)	5	
	AN936A10	WASHER (grd stud) (88044)	5	
	MS35337-43	WASHER (grd stud) (96906)	5	
	AN345-10	NUT (grd stud) (88044)	5	
	AN960D10	WASHER (grd stud) (88044)	5	
	MS21042L3	NUT (grd stud) (96906)	5	
	851227-101	ELECTRICAL INSTL, AC load center relay	1	
		Attaching Parts		
-34	NAS623-3-1	SCREW (80205)	4	
-35	MS21042L3	NUT (96906)	4	
		*		
	851226-101	ELECTRICAL ASSY, AC load center relay	1	
-36	9302-5964A	RELAY, (K2) DPDT 10 Amp miniature solenoid (A0304) (35344) (Lockheed spec dwg 613683-1) (intchg wth AH23CN460AB	2	
	AH23CN460AB	RELAY, (K2) DPDT 10 Amp miniature solenoid (72152) (Lockheed spec dwg 613683-1) (intchg wth 9302-5964A)	REF	

Fuselage Electrical and Electronics

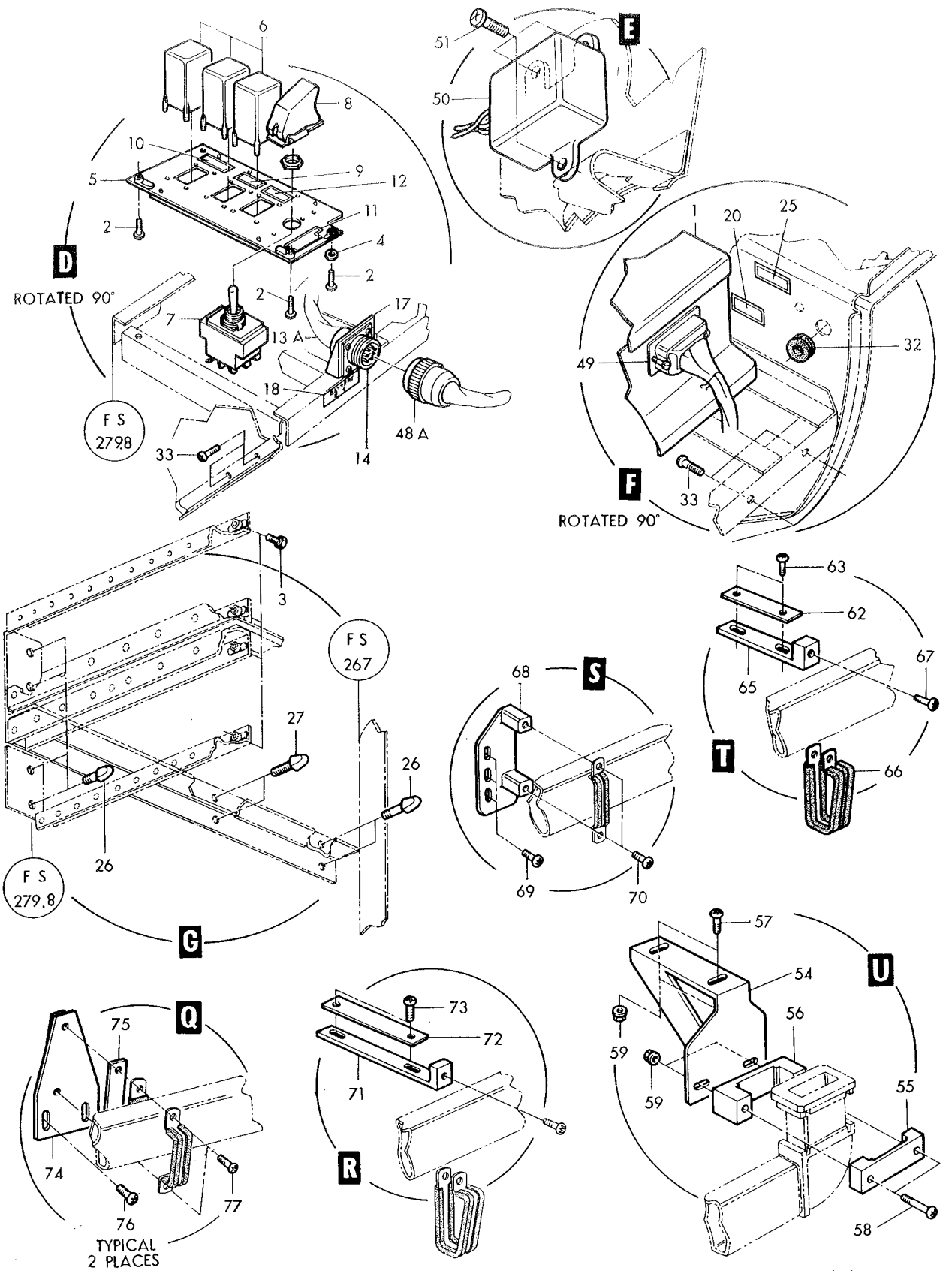

Figure 174–Electrical Load Center Control Equipment and Rack and Wave Guide Instl. (Sheet 3 of 3)

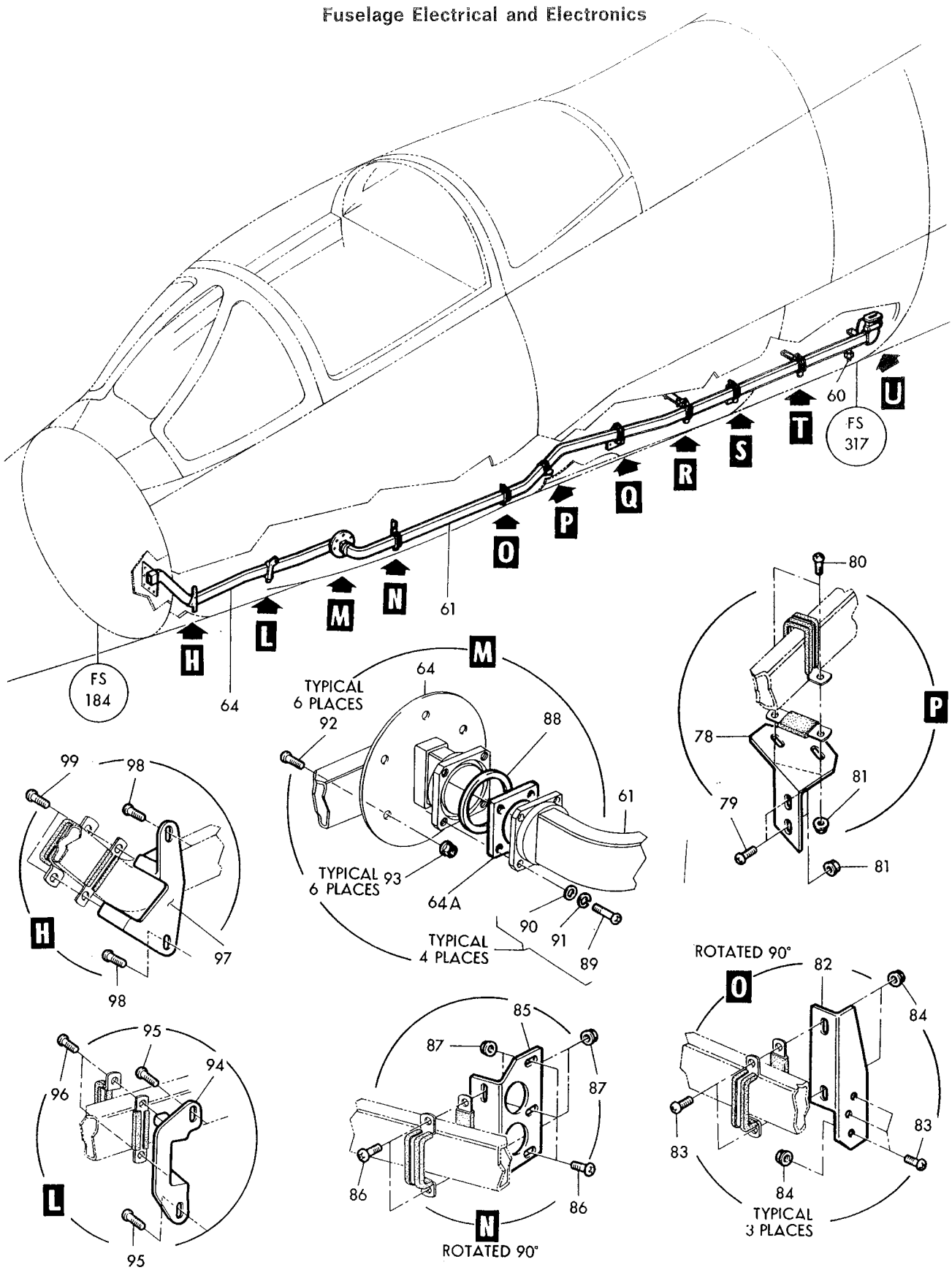

Figure 174–Electrical Load Center Control Equipment and Rack and Wave Guide Instl. (Sheet 2 of 3)

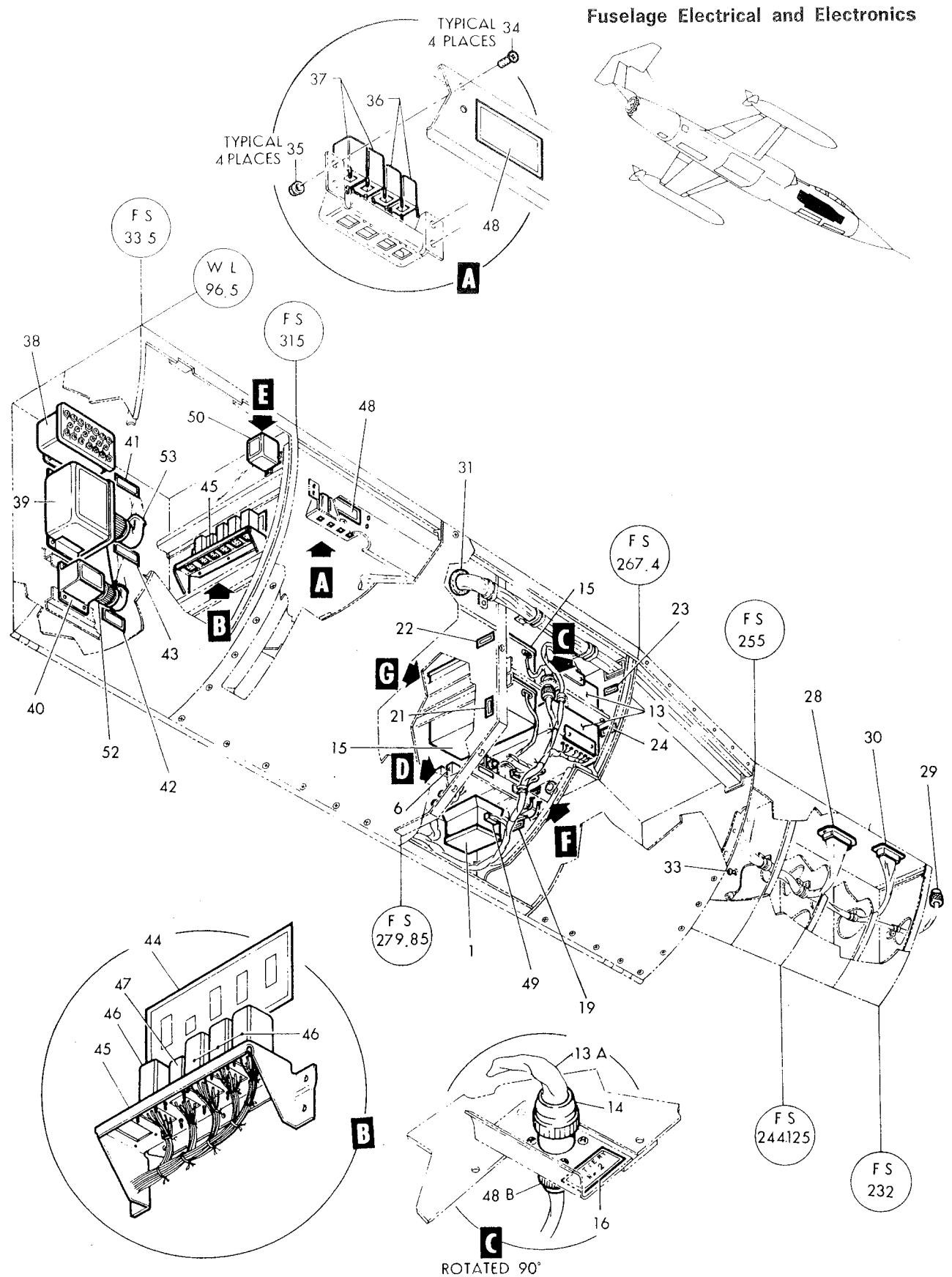

Figure 174-Electrical Load Center Control Equipment and Rack and Wave Guide Instl. (Sheet 1 of 3)

Figura e particolare	NDR	1	2	3	4	5	6	7	DENOMINAZIONE	Quant.	Codice applicab.
									ELECTRICAL LOAD CENTER CONTROL EQUIPMENT AND RACK AND WAVE GUIDE INSTL		
174	776877-105			.					ELECTRICAL INSTL, AC load center *(see fig. 156 for reqd)*	REF	
- 1	250539-1			.	.				RELAY, (K11) hermetically sealed underfrequency magnetic (A0210) (intchg wth RY442B)	2	
	RY442B1			.	.				RELAY, (K11) hermetically sealed underfrequency magnetic (72152) (Lockheed spec dwg 613539-1) (intchg wth 250539-1)	REF	
									Attaching Parts		
	NAS623-3-5			.	.				SCREW (80205)	4	
	NAS43DD3-6			.	.				SPACER (80205)	4	
	AN960D10			.	.				WASHER (88044)	4	
	MS21042L3			.	.				NUT (96906)	4	
	AN743B12			.	.				BRACKET, AC load center (88044)	1	
	MS21919WDG6			.	.				CLAMP (96906)	1	
									Attaching Parts		
	AN520-10R6			.	.				SCREW (88044)	1	
	MS21042L3			.	.				NUT (96906)	1	
	784646-1		C.	.					EQUIPMENT ASSY, special weapon (Modified and reidentified to 784646-101 per AA.1F-104S-OT-127)	1	6701-6720
	784646-101		D.	.					EQUIPMENT ASSY, special weapon (Supersedes 784646-1 per AA.1F-104S-OT-127)	1	6721-
									Attaching Parts		
- 2	NAS623-3-3			.	.				SCREW (80205)	3	
- 3	NAS1103-3			.	.				SCREW (80205)	4	
- 4	AN960D10			.	.				WASHER (88044)	1	
- 5	784645-1		C.	.	.				PANEL ASSY, special weapon (Modified and reidentified to 784645-101 per AA.1F-104S-OT-127)	1	6701-6720
	784645-101		D.	.	.				PANEL ASSY, special weapon (Supersedes 784645-1 per AA.1F-104S-OT-127)	1	6721-
- 6	9302-5964A			.	.				RELAY, (K2) miniature 10 Amp DPDT solenoid (A0304) (35344) (Lockheed spec dwg 613683-1) (intchg wth AH23CN460AB)	3	
	AH23CN460AB			.	.				RELAY, (K2) miniature 10 Amp DPDT solenoid (72152) (Lockheed spec dwg 613683-1) (intchg wth 9302-5964A)	REF	
									Attaching Parts		
	MS35338-40			.	.				WASHER (96906)	4	
	MS20341-4S			.	.				NUT (96906)	4	
- 7	MS25068-23			.	.				SWITCH, (S18) (special weapon release) (96906)	1	
- 8	MS25224-1		C.	.	.				GUARD (96906)	1	6701-6720
	MS25452-1		D.	.	.				GUARD (96906)	1	
									Attaching Parts		
	AN515B6R6		D.	.	.				SCREW (88044)	2	6701-6740
	NAS601-6P		D.	.	.				SCREW (80205)	2	6741-
	AN960D6		D.	.	.				WASHER (88044)	8	
	MS21042L06		D.	.	.				NUT (96906)	2	
- 9	775097-1			.	.				DECAL, special stores drop	1	
-10	775096-1			.	.				DECAL, MD6 fin control relay	1	
-11	784648-1			.	.				DECAL, special weapon release	1	
-12	784980-1			.	.				DECAL, special weapon lock	1	
	776877-107			.	.				EQUIPMENT ASSY, AC load center	2	
									Attaching Parts		
	NAS623-3-9			.	.				SCREW (80205)	1	
	NAS623-3-11			.	.				SCREW (80205)	1	
	AN960D10			.	.				WASHER (88044)	2	
	MS21042L3			.	.				NUT (96906)	2	

Figura e particolare	NDR	1 2 3 4 5 6 7 DENOMINAZIONE	Quant.	Codice applicab.
173	849645-101	. HARNESS ASSY, P-44 receptacle to load center *(see fig. 156 for reqd)* . .	REF	6701-6765
	851910-101	. HARNESS ASSY, P-44 receptacle to load center *(see fig. 156 for reqd)* . .	REF	6766-
-125	EMRA50-8SF2A116G	. . CONNECTOR, (J4) recp (P-44 disc.) (81312)	1	

A - Reqd per AA.1F-104-OT-732B
B - Removed per AA,1F-104S-OT-124
C - Reqd per AA.1F-104S-OT-124
D - Removed per AA.1F-104S-OT-155
E - Reqd per AA.1F-104S-OT-155

Figura e particolare	NDR	1 2 3 4 5 6 7	DENOMINAZIONE	Quant.	Codice applicab.
173	849624-101	.	HARNESS ASSY, duct anti-ice overheat sensor relay *(see fig. 156 for reqd)*	REF	
-111	MHX2048	. .	RELAY, (K19) hermetically sealed DPDT solenoid (70309) (Lockheed spec dwg 613378-1)	1	
			Attaching Parts		
	AN515-4R6	. .	SCREW (88044)	2	
	AN960D4	. .	WASHER (88044)	2	
	MS21042L04	. .	NUT (96906)	2	
			*		
	849626-101	.	HARNESS ASSY, duct anti-ice power interlock relay *(see fig. 156 for reqd)*	REF	
-112	2C2C266	. .	RELAY, (K28) hermetically sealed 115 VAC undervoltage DPDT armature (A3051) (99028) (Lockheed spec dwg 613364)	1	
	849633-101	.	HARNESS ASSY, generator failure relays *(see fig. 156 for reqd)*	REF	
	762701	. .	RELAY ASSY, power sequence	1	
-113	9230-3406	. . .	RELAY, (K7) 4PDT armature (35344) (Lockheed spec dwg 613348-3) (intchg wth 65-591 and 3878-10012)	2	
	65-591	. . .	RELAY, (K7) 4PDT armature (96261) (Lockheed spec dwg 613348-3) (intchg wth 9230-3406 and 3878-10012)	REF	
	3878-10012	. . .	RELAY, (K7) 4PDT armature (95260) (Lockheed spec dwg 613348-3) (intchg wth 9230-3406 and 65-591)	REF	
			Attaching Parts		
	MS35338-41	. . .	WASHER (96906)	4	
	MS20341-6S	. . .	NUT (96906)	4	
			*		
	849628-101	.	HARNESS ASSY, emergency bus interlock relay *(see fig. 136 for reqd)*	REF	
	762701	. .	RELAY ASSY, power sequence	1	
-114	9230-3406	. . .	RELAY, (K7) 4PDT armature (35344) (Lockheed spec dwg 613348-3) (intchg wth 65-591 and 3878-10012)	2	
	65-591	. . .	RELAY, (K7) 4PDT armature (96261) (Lockheed spec dwg 613348-3) (intchg wth 9230-3406 and 3878-10012)	REF	
	3878-10012	. . .	RELAY, (K7) 4PDT armature (95260) (Lockheed spec dwg 613348-3) (intchg wth 9230-3406 and 65-591)	REF	
			Attaching Parts		
	MS35338-41	. . .	WASHER (96906)	4	
	MS20341-6S	. . .	NUT (96906)	4	
			*		
	849630-101	.	HARNESS ASSY, fixed frequency relays *(see fig. 156 for reqd)*	REF	6701-6815
	852397-101	.	HARNESS ASSY, fixed frequency relays *(see fig. 156 for reqd)*	REF	6816-
-115	CA3108ER20-27S	. .	CONNECTOR, (P292) plug (hydraulic generator power release) (71468)	1	
-116	CA3108ER16S8S	. .	CONNECTOR, (P269) plug (fixed frequency overvoltage relay) (71468)	1	
	849644-101	.	HARNESS ASSY, P-43 disc. to AC load center *(see fig. 156 for reqd)*	REF	
-117	EMRA66SF2A116G	. .	CONNECTOR, (J2) recp (P-43 disc.) (81312)	1	
	852038-101	.	HARNESS ASSY, fixed freq generator test jacks *(see fig. 156 for reqd)*	REF	
-118	MS16108-1C	. .	JACK, (J280) (96906) (white)	2	
-119	MS16108-2C	. .	JACK, (J281) (96906) (red)	2	
-120	MS16108-7C	. .	JACK (J282), (96906) (blue)	2	
-121	MS16108-8C	. .	JACK, (J283) (96906) (yellow)	2	
	849660-101	.	HARNESS ASSY, P-66 disc. to splice *(see fig. 156 for reqd)*	REF	6701-6815
	852274-101	.	HARNESS ASSY, P-66 disc. to splice *(see fig. 156 for reqd)*	REF	6816-
-122	EMRA66SM1A106	. .	CONNECTOR, (P39) plug (P-66 disc.) (81312)	1	
	776863-3	.	CONDUIT INSTL, case stowage compartment *(see fig. 156 for reqd)*	REF	
-123	789326-1	. .	CLAMPBLOCK ASSY, case stowage compartment conduit	1	
			Attaching Parts		
	AN520-10R14	. .	SCREW (88044)	2	
	AN960D10	. .	WASHER (88044)	2	
			*		
	849642-101	.	HARNESS ASSY, fwd end circuit breaker door *(see fig. 156 for reqd)*	REF	6701-6765
	852143-101	.	HARNESS ASSY, fwd end circuit breaker door *(see fig. 156 for reqd)*	REF	6766-
-124	MS25041-7	A. .	LIGHT, (DS102) indicator (fuel shut-off valve closed test) (96906)	1	
	LS9030-327	A. .	LAMP, incandescent (Blue-white) (36659)	1	

Figura e particolare	NDR	1 2 3 4 5 6 7 DENOMINAZIONE	Quant.	Codice applicab.
		Attaching Parts		
173	NAS1096-3-14	SCREW (88044)	4	
-88	9214	RELAY, (K10) 3PST 60 Amp solenoid (A0299) (35344) (Lockheed spec dwg 613292)	1	
		Attaching Parts		
	NAS1096-3-12	SCREW (80205)	3	
-89	784363-1	DECAL, duct anti-ice power relay	1	
-90	784362-1	DECAL, secondary AC bus relay	1	
-91	771114-1	DECAL, auxiliary fuel tank pump relay	1	
-92	761059-11	DECAL, LE flaps relay	1	
-93	761059-17	DECAL, generator No. 1 relay	1	
-94	761059-18	DECAL, generator No. 2 relay	1	
-95	761059-20	DECAL, landing flaps relay	1	
-96	775099-1	DECAL, special stores power relay	1	
-97	790907-1	DECAL, fixed frequency overvoltage relay	1	
-98	784360-1	DECAL, AC load center	1	
-99	761059-41	DECAL, generator failure	1	
-100	761059-42	DECAL, external power control relay	1	
-101	851262-101	DECAL, secondary fixed frequency bus relay	1	
-102	785849-1	DECAL, generator No. 1 and No. 2 failure relay	1	
	849953-101	RELAY INSTL, AC load center hydraulic generator	1	
	776912-101	RACK ASSY, protective panel	2	
		Attaching Parts		
	NAS1096-3-8	SCREW (80205)	4	
	AN960D10L	WASHER (88044)	4	
	MS21042L3	NUT (96906)	4	
-103	34B56-1A	PANEL, (E2000) surge electrical system protection (A2537) (see T.O. 8A25-23-4)	1	
-104	776912-3	ANGLE, protective panel	1	
		Attaching Parts		
	NAS517-3-2	SCREW (80205)	4	
	AN960-10L	WASHER (88044)	4	
	MS21042L3	NUT (96906)	4	
-105	250690-9A	D. RELAY, (K33) frequency and voltage controlled armature (A0210) (250690-9B is subtl sub)	1	6701-6753
	250690-9B	E. RELAY, (K33) frequency and voltage controlled armature (A0210) (Subtl sub for 250690-9A) (intchg wth RY580A1 and RY580A2)	1	
	RY580A2	E. RELAY, (K33) frequency and voltage controlled armature (72152) (Lockheed spec dwg 613690-9) (intchg wth RY580A1 and 250690-9B)	REF	
	RY580A1	E. RELAY, (K33) frequency and voltage controlled armature (72152) (Lockheed spec dwg 613690-9) (intchg wth RY580A2 and 250690-9B)	REF	
		Attaching Parts		
	NAS517-3-2	SCREW (80205)	4	
	AN960-10L	WASHER (88044)	4	
	MS21042L3	NUT (96906)	4	
-106	787535-1	DECAL, hydraulic generator sensor relay	1	
-107	761059-24	DECAL, hydraulic No. 1 protection panel	1	
-108	761059-25	DECAL, generator No. 2 protection panel	1	
-109	784366-1	DECAL, overheat sensor relay	1	
-110	NAS1096-3-12	SCREW (grd stud) (80205)	5	
	AN936A10	WASHER (grd stud) (88044)	5	
	MS35337-43	WASHER (grd stud) (96906)	5	
	AN345-10	NUT (grd stud) (88044)	5	
	AN960-10	WASHER (grd stud) (88044)	5	
	MS21042L3	NUT (grd stud) (96906)	5	

Figura e particolare	NDR	1	2	3	4	5	6	7	DENOMINAZIONE	Quant.	Codice applicab.
173	849650-101								HARNESS ASSY, fuel control relay panel	1	
-69	EMRA66PF2A116								CONNECTOR, (J27) recp (P-66 disc.) (81312)	1	
									Attaching Parts		
	AN515-4R6								SCREW (88044)	4	
	MS21042L04								NUT (96906)	4	
									✲		
-70	849994-101								DECAL, fuel inlet doors and AIM-7N relay panel	2	
-71	NAS1096-3-12								SCREW (grd stud) (80205)	3	
	AN936A10								WASHER (grd stud) (88044)	3	
	AN935-10L								WASHER (grd stud) (88044)	3	
	AN345-10								NUT (grd stud) (88044)	3	
	AN960-10								WASHER (grd stud) (88044)	3	
	MS21042L3								NUT (grd stud) (96906)	3	
	849960-101								BRACKET, AC load center relay mtg	1	
-72	776905-1								BUS BAR, AC load center	1	
-73	775178-1								BUS BAR, AC load center	1	
-74	760996-25								BUS BAR, AC load center	1	
-75	775179-1								BUS BAR, AC load center	1	
-76	771702-1								BUS BAR, AC load center	3	
-77	9215-3473								RELAY, (K8) hermetically sealed with mechanical interlock 115 VAC 60 Amp 3PDT power armature (A0299) (35344) (Lockheed spec dwg 613448-1)	1	
									Attaching Parts		
	NAS1096-3-12								SCREW (80205)	4	
	NAS43DD3-18								SPACER (80205)	4	
									✲		
-78	9215-3473								RELAY, (K8) hermetically sealed with mechanical interlock 115 VAC 60 Amp 3PDT power armature (A0299) (35344) (Lockheed spec dwg 613448-1)	2	
									Attaching Parts		
	NAS1096-3-12								SCREW (80205)	4	
									✲		
-79	9219								RELAY, (K12) hermetically sealed with mechanical interloc. reversing 3PDT armature (A0299) (35344) (Lockheed spec dwg 613329-3)	1	
									Attaching Parts		
	NAS1096-3-12								SCREW (80205)	4	
									✲		
-80	L417								RELAY, (K14) hermetically sealed N.O. 220 VAC 10 Amp 3PST armature (96261) (Lockheed spec dwg 613288)	1	
									Attaching Parts		
	NAS1096-3-12								SCREW (80205)	4	
									✲		
-81	MS24143D1								RELAY (K27) (3PST 25 Amp) (96906)	1	
									Attaching Parts		
	NAS1096-3-8								SCREW (80205)	4	
									✲		
-82	760289-71								PLATE ASSY, AC load center	1	
									Attaching Parts		
	NAS1096-3-6								SCREW (88044)	4	
									✲		
-83	LS1944-2								TERMINAL BLOCK ASSY, electrical (36659)	1	
-84	LS1944-7								TERMINAL BLOCK ASSY, electrical (36659)	1	
									Attaching Parts		
	AN515-4R6								SCREW (88044)	2	
	MS21042L04								NUT (96906)	2	
									✲		
-85	AN437-2-6								STRIP, terminal block insulating and numbering (88044)	2	
-86	760289-15								PLATE, AC load center	1	
-87	9213								RELAY, (K17) 3PST 50 Amp armature (A0299) (35344) (Lockheed spec dwg 613318)	1	

Figura e particolare	NDR	1 2 3 4 5 6 7 DENOMINAZIONE	Quant.	Codice applicab.
		Attaching Parts		
173-56	AN960D10	WASHER (88044) (1 reqd on fwd stud and 2 reqd on aft stud)	AR	
-57	MS21042L3	NUT (96906)	1	
		✲		
	849952-107	SUPPORT INSTL, AC load center support *(see fig. 172 for reqd)*	REF	
-58	LS3850-2-10	SHIELD ASSY, terminal block (36659)	1	
-59	LS1909-2	TERMINAL BLOCK ASSY, electrical (36659)	1	
		Attaching Parts		
	AN515-4R6	SCREW (88044)	4	
		✲		
-60	LS4999A1-10	STRIP, terminal block insulating and numbering (36659)	1	
-61	MS25226-2-2	BUS (96906)	1	
	849906-101	ELECTRICAL INSTL, RH electrical bay *(see fig. 30 for reqd)*	REF	
	849981-101	DUCT INSTL, fus sta 255 to 268 special stores *(see fig. 38)*	1	
-62	764534	DECAL, high voltage warning	1	
	849952-101	EQUIPMENT INSTL, AC load center	1	
	849959-101	PANEL ASSY, AC load center fuel inlet door and AIM-7N	1	
		Attaching Parts		
	NAS1096-3-10	SCREW (80205)	4	
		✲		
-63	9309-5965A	RELAY, (K1) 4PDT 10 Amp miniature solenoid (A0304) (35344) (Lockheed spec dwg 613684-1) (intchg wth AH43CR460AB)	5	
	AH43CR460AB	RELAY, (K1) 4PDT 10 Amp miniature solenoid (72152) (Lockheed spec dwg 613684-1) (intchg wth 9309-5965A)	REF	
		Attaching Parts		
	MS35338-40	WASHER (96906)	4	
	MS20341-4S	NUT (96906)	4	
		✲		
-64	9302-5964A	RELAY, (K2) DPDT 10 Amp miniature solenoid (A0304) (35344) (Lockheed spec dwg 613683-1) (intchg wth AH23CN460AB)	2	
	AH23CN460AB	RELAY, (K2) DPDT 10 Amp miniature solenoid (72152) (Lockheed spec dwg 613683-1) (intchg wth 9302-5964A)	REF	
		Attaching Parts		
	MS35338-40	WASHER (96906)	4	
	MS20341-4S	NUT (96906)	4	
		✲		
-65	2C2C266	RELAY, (K28) hermetically sealed 380/420 cycle 115 V under voltage DPDT armature (A3051) (99028) (Lockheed spec dwg 613364)	1	
		Attaching Parts		
	AN960-6	WASHER (88044)	2	
	MS35338-41	WASHER, lock (96906)	2	
	MS20341-6S	NUT (96906)	2	
		✲		
-66	9230-3406	RELAY, (K7) 4PDT armature (35344) (Lockheed spec dwg 613348-3) (intchg wth 65-591 and 3878-10012)	1	
	65-591	RELAY, (K7) 4PDT armature (35346) (Lockheed spec dwg 613348-3) (intchg wth 9230-3406 and 3878-10012)	REF	
	3878-10012	RELAY, (K7) 4PDT armature (95260) (Lockheed spec dwg 613348-3) (intchg wth 9230-3406 and 65-591)	REF	
		Attaching Parts		
	MS35338-41	WASHER (96906)	4	
	MS20341-6S	NUT (96906)	4	
		✲		
-67	MS25273A1	RELAY, (K50) (96906)	1	
		Attaching Parts		
	MS21042L06	NUT (96906)	4	
		✲		
-68	MHX2048	RELAY, (K19) hermetically sealed DPDT solenoid (70309) (Lockheed spec dwg 613378-1)	4	
		Attaching Parts		
	AN515-4R6	SCREW (88044)	2	
	MS21042L04	NUT (96906)	2	
		✲		

Figura e particolare	NDR	1	2	3	4	5	6	7	DENOMINAZIONE	Quant.	Codice applicab.
173	MS21042L3								NUT (96906)	4	
-18	LS3850-4-5								SHIELD ASSY, terminal block (36659)	2	
-19	LS3850-2-8								SHIELD ASSY, terminal block (36659)	1	
-20	LS1907-2								TERMINAL BLOCK ASSY, electrical (36659)	1	
									Attaching Parts		
	AN515-4R6								SCREW (88044)	2	
									*		
	MS21042L04								NUT (96906)	2	
-21	LS4999A1-8								STRIP, terminal block insulating and numering (36659)	1	
	849649-101								HARNESS ASSY, fixed frequency power sensing relay	1	
-22	2C2C266								RELAY, (K28) hermetically sealed 380/420 cycle 115 V under voltage DPDT armature (A3051) (99028) (Lockheed spec dwg 613364)	1	
									Attaching Parts		
	AN960-6								WASHER (88044)	2	
	MS35338-41								WASHER, lock (96906)	2	
	MS20341-6S								NUT (96906)	2	
									*		
-23	760289-22								PIN, hinge	1	
-24	764534								DECAL, danger high voltage	9	
-25	790969-1								DECAL, danger high voltage warning	1	
-26	768021-1								DECAL, load center fuel pump test light	1	
-26A	852096-101	A.							CHART, fuel shut-off closed valve test light	1	
-26B	852098-101	A.							DECAL, fuel shut-off closed valve test light	1	
-27	789878-1								DECAL, No. 1 gun motor power	1	
-28	789879-1								DECAL, No. 2 gun motor power	1	
-29	761059-22								DECAL, emergency AC bus relay	1	
-30	761059-14								DECAL, external power relay	1	
-31	784377-1								DECAL, pre-flight test relay	1	
-32	784361-1								DECAL, fuel booster pump No. 3 relay	1	
-33	771407-1								DECAL, fuel booster pump No. 2 relay	1	
-34	784364-1								DECAL, power intake relay	1	
-35	852034-101								DECAL, AC load center TB41	1	
-36	792825-1								DECAL, AC load center TB27	1	
-37	LS4998TB41								DECAL, terminal block identification (36659)	1	
-38	LS4998TB27								DECAL, terminal block identification (36659)	1	
-39	792872-1								DECAL, fixed frequency power sensing relay	1	
-40	792865-1								DECAL, fixed frequency power sensing relay	1	
-41	852145-101								DECAL aft AC load center TB24	1	
-42	LS4998TB24								DECAL terminal block identification (36659)	1	
-43	851187-101								DOOR ASSY, AC load center *(see fig. 175)*	1	
-44	850991-101								BRACKET, fixed freq gen test jacks	2	
									Attaching Parts		
	NAS603-6								SCREW (80205)	4	
	AN960D10								WASHER (88044)	4	
	MS21042L3								NUT (96906)	4	
									*		
-45	852016-101								DECAL, AIM-7E fixed freq generator test	1	
-46	852029-101								DECAL, rat fixed freq generator test	1	
-47	LS7000A6-2								TERMINAL BLOCK ASSY, electrical (36659)	1	
									Attaching Parts		
	NAS601-10								SCREW (80205)	2	
									*		
-48	LS7007-6-2								COVER ASSY, terminal block assy (36659)	1	
-49	LS7009-6								DECAL, terminal block identification (36659)	1	
-50	JAN1N540								DIODE (81349)	1	
-51	845772-101								CHART, ac load center TB11 wiring	1	
	849953-103								SUPPORT INSTL, AC load center hydraulic generator *(see fig. 172 for reqd)*	REF	
-52	778294-1								STUD, inverter mounting	2	
									Attaching Parts		
-53	AN960D10								WASHER (88044) (under nut)	1	
-54	MS21042L3								NUT (96906)	1	
									*		
-55	778294-1								STUD, inverter mounting	2	

Fuselage Electrical and Electronics

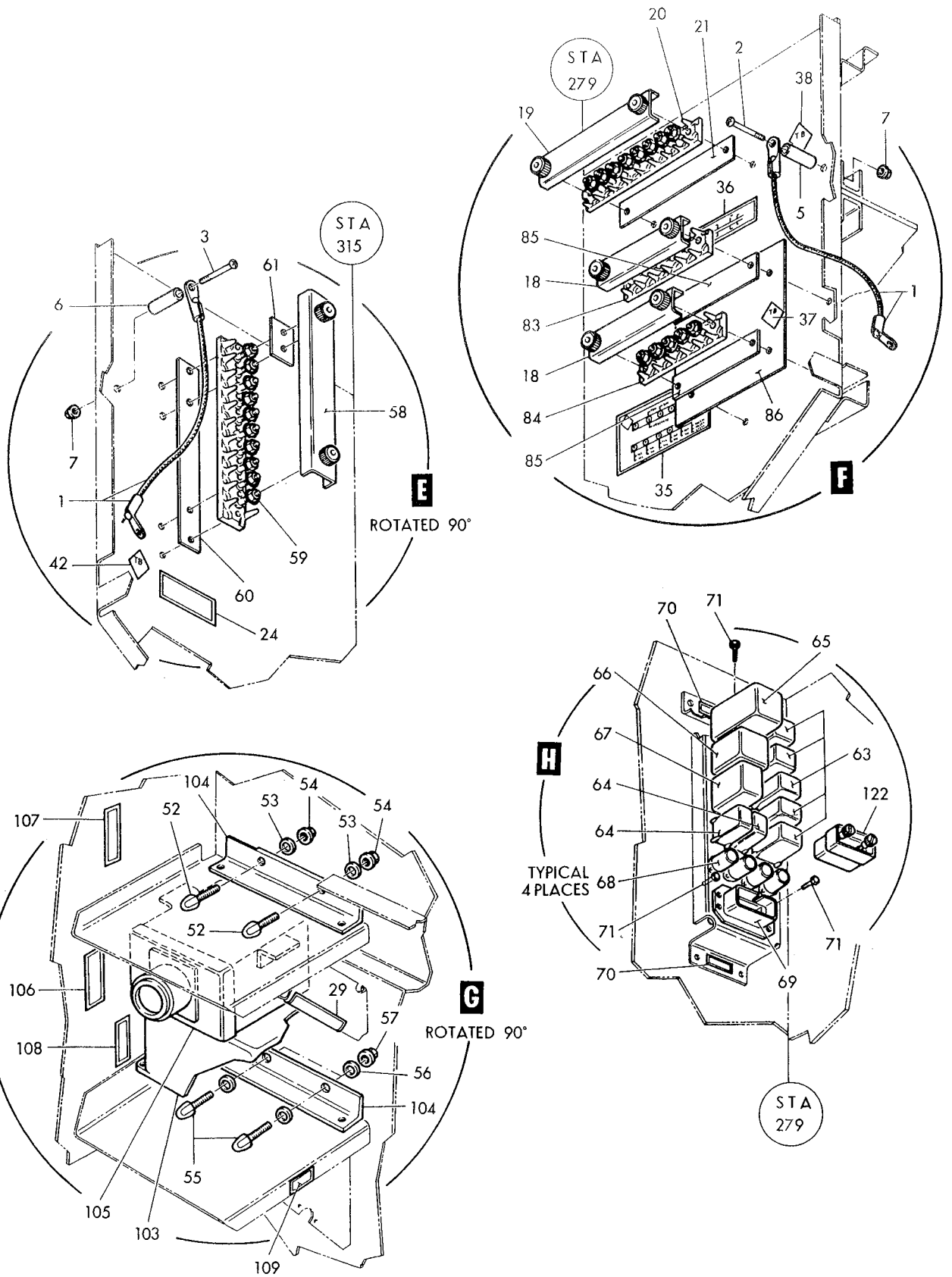

Figure 173–Electrical Load Center Back Panel Equipment (Sheet 3 of 3)

Fuselage Electrical and Electronics

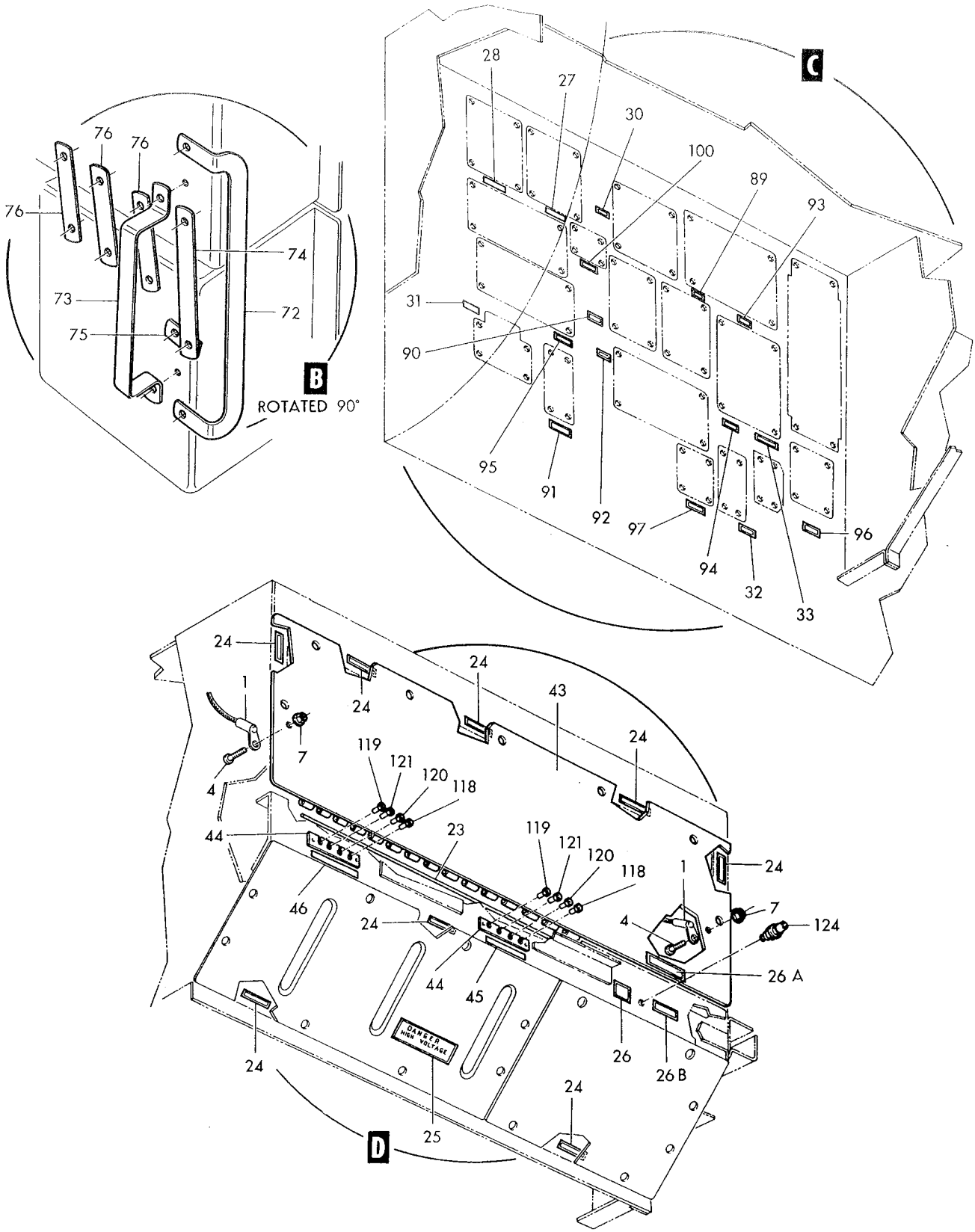

Figure 173–Electrical Load Center Back Panel Equipment (Sheet 2 of 3)

Fuselage Electrical and Electronics

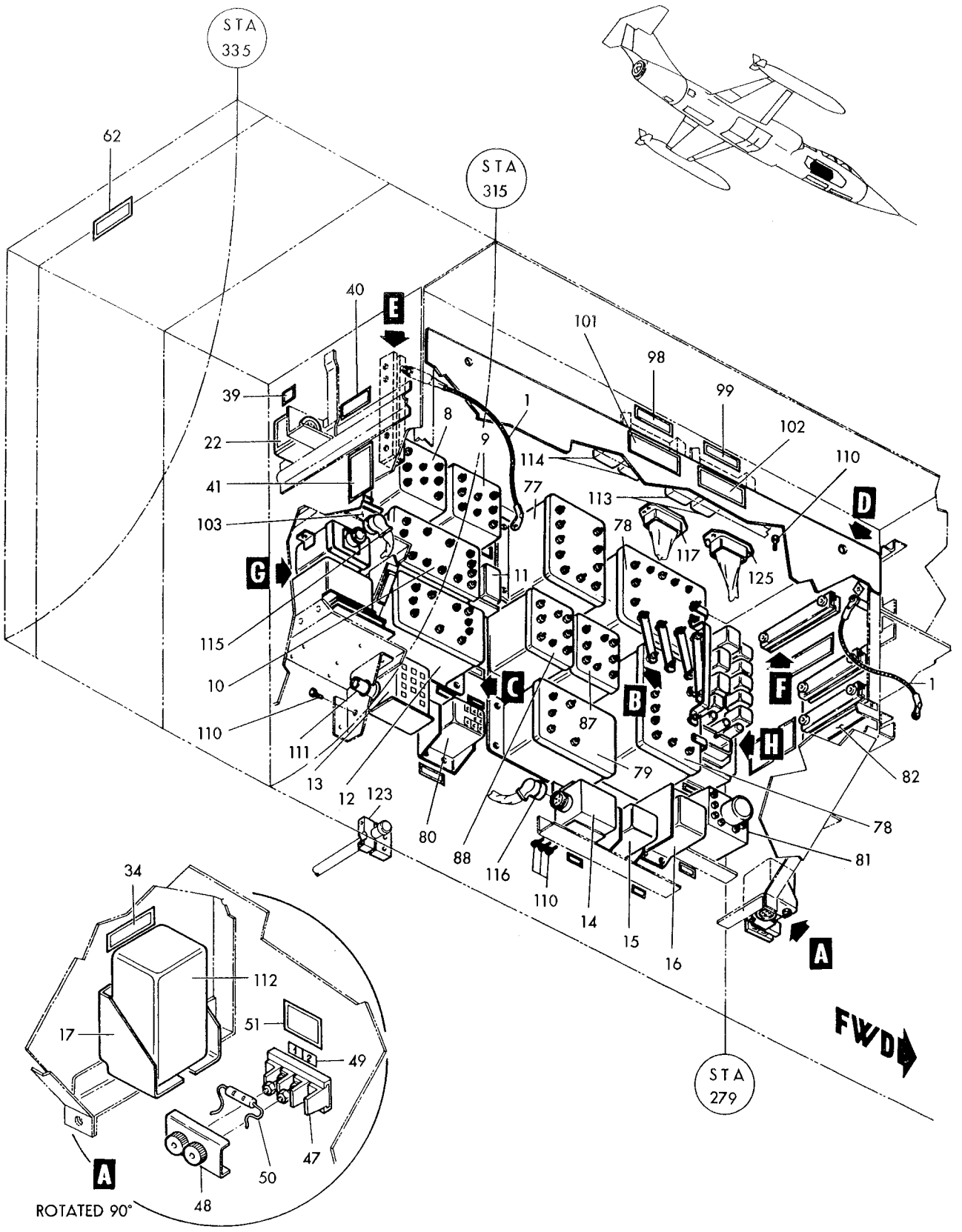

Figure 173–Electrical Load Center Back Panel Equipment (Sheet 1 of 3)

Figura e particolare	NDR	1 2 3 4 5 6 7 DENOMINAZIONE	Quant.	Codice applicab.
		ELECTRICAL LOAD CENTER BACK PANEL EQUIPMENT		
173	849952-105	EQUIPMENT INSTL, AC load center *(see fig. 156 for reqd)*	REF	
-1	765056	CORD SUPPORT ASSY, AC load center	2	
		Attaching Parts		
-2	NAS1096-3-32	SCREW (80205) (fus sta 279 only)	1	
-3	NAS1096-3-22	SCREW (80205) (fus sta 315 only)	1	
-4	NAS1096-3-9	SCREW (80205)	1	
-5	LS607-48	SPACER, phenolic (36659) (fus sta 279 only)	1	
-6	LS607-40	SPACER, phenolic (36659) (fus sta 315 only)	1	
-7	MS21042L3	NUT (96906)	2	
		*		
	765056-3	CORD, AC load center support	1	
	765056-4	TERMINAL, cord	1	
	AN659-7	TERMINAL (88044)	1	
-8	9213	RELAY, (K17) 3PST armature (A0299) (35344) (Lockheed spec dwg 613318)	1	
		Attaching Parts		
	NAS1096-3-12	SCREW (80205)	4	
		*		
-9	9213	RELAY, (K17) 3PST armature (A0299) (35344) (Lockheed spec dwg 613318)	1	
		Attaching Parts		
	NAS1096-3-12	SCREW (80205)	4	
		*		
-10	9215	RELAY, (K9) 3PDT armature (A0299) (35344) (Lockheed spec dwg 613349)	1	
		Attaching Parts		
	NAS1096-3-24	SCREW (80205)	4	
		*		
-11	MS24568D1	RELAY (K52) (10 Amp 4PDT) (96906)	1	
		Attaching Parts		
	AN515-8R6	SCREW (88044)	4	
		*		
-12	9219	RELAY, (K12) 3PDT armature hermetically sealed (A0299) (35344) (Lockheed spec dwg 613329-3)	1	
		Attaching Parts		
	NAS1096-3-12	SCREW (80205)	4	
		*		
-13	MS24568D1	RELAY, (K52) (10 Amp 4PDT) (96906)	1	
		Attaching Parts		
	AN515-8R8	SCREW (88044)	4	
		*		
-14	1256-5	RELAY, (K49) hermetically sealed over voltage time delay (03972) (Lockheed spec dwg 613737-5)	1	
		Attaching Parts		
	AN515-8R8	SCREW (88044)	3	
	AN515-8R8	B. SCREW (88044)	1	6701-6740
	MS35265-45	C. SCREW (96906)	1	
		*		
-15	L417	RELAY, (K14) hermetically sealed N.O. 220VAC 10 Amp 3PST armature (96261) (Lockheed spec dwg 613288)	1	
		Attaching Parts		
	NAS1096-3-12	SCREW (80205)	4	
		*		
-16	9274-3929	RELAY, (K13) hermetically sealed 3PDT armature (35344) (Lockheed spec dwg 613594-1)	1	
		Attaching Parts		
	AN515-8R8	SCREW (88044)	4	
		*		
	AN960D8	WASHER (88044)	2	
-17	784081-1	BRACKET, AC load center relay	1	
		Attaching Parts		
	NAS1096-3-8	SCREW (80205)	4	
		*		

Figura e particolare	NDR	1 2 3 4 5 6 7 DENOMINAZIONE	Quant.	Codice applicab.
172-18	799418-101	DECAL, standby attitude indicator circuit breaker	1	
-19	850176-101	DECAL, AC load center identification circuit breaker	1	
-20	849966-101	DECAL, AC load center identification circuit breaker	1	
-20A	849965-101	DECAL, AC load center identification circuit breaker	1	
	760289-101	PANEL ASSY, AC load center	1	
-21	760289-6	PANEL, AC load center	1	
-22	760289-11	ANGLE, AC load center	1	
	760289-24L	ANGLE ASSY, AC load center	1	
-23	760289-8L	ANGLE, AC load center	1	
	760289-25L	ANGLE ASSY, AC load center	1	
-24	760289-69	ANGLE, AC load center	1	
	760289-36	ANGLE ASSY, AC load center	1	
-25	760289-13	ANGLE, AC load center	1	
-26	850173-101	SUPPORT, AC load center	1	
-27	NAS1096-3-16	SCREW (grd stud) (80205)	3	
-28	AN936A10	WASHER (grd stud) (88044)	3	
-29	AN935-10L	WASHER (grd stud) (88044)	3	
-30	AN345-10	NUT (grd stud) (88044)	3	
-31	AN960-10	WASHER (grd stud) (88044)	3	
-32	MS21042L3	NUT (grd stud) (96906)	3	
	849953-103	SUPPORT INSTL, AC load center hydraulic generator *(see fig. 173)*	1	
-33	786218-1	DECAL, nose LG uplock hook inspection hole	1	
-34	849958-101	DECAL, aft AC load center protection panel wiring	1	6701-6815
	852398-101	DECAL, aft AC load center protection panel wiring	1	6816-
-35	850287-101	DECAL, aft AC load center relay wiring	1	
-36	851244-101	DECAL, AC load center relay wiring	1	
-37	849998-101	DECAL, fwd AC load center generator voltage regulator and battery relay	1	
-38	785853-1	A DECAL, fuel pump test light wiring	1	
-39	849997-101	DECAL, fwd lwr AC load center circuit breaker wiring	1	
-40	851407-101	DECAL, AC load center inlet door and AIM-7N relays wiring	1	
	761378-101	BULKHEAD INSTL, fus sta 315 RH *(see fig. 30 for reqd)*	REF	
	761378-103	BULKHEAD ASSY, fus sta 315 RH	1	
	849952-107	SUPPORT INSTL, AC load center *(see fig. 173)*	1	
-41	850173-102	SUPPORT, AC load center	1	
	760289-24R	ANGLE ASSY, AC load center	1	
-42	760289-8R	ANGLE, AC load center	1	
	760289-25R	ANGLE ASSY, AC load center	1	
-43	760289-12R	ANGLE, AC load center	1	
	760289-36	ANGLE ASSY, AC load center	1	
-44	760289-13	ANGLE, AC load center	1	

A - Reqd per AA.1F-104-OT-732B

Fuselage Electrical and Electronics

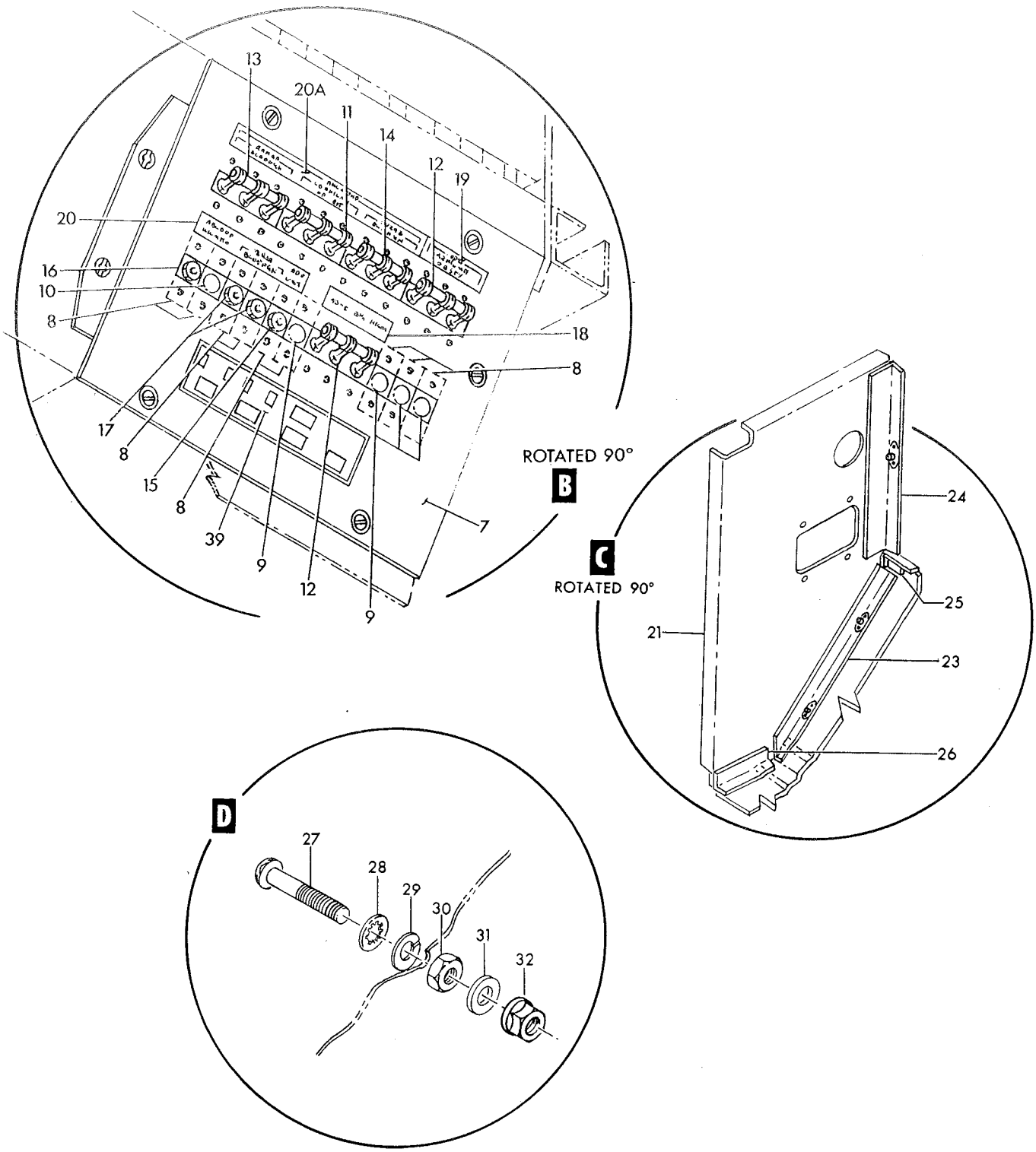

P56-15-5

Figure 172—Electrical Load Center Top Relay Panel Structure and Equipment (Sheet 2 of 2)

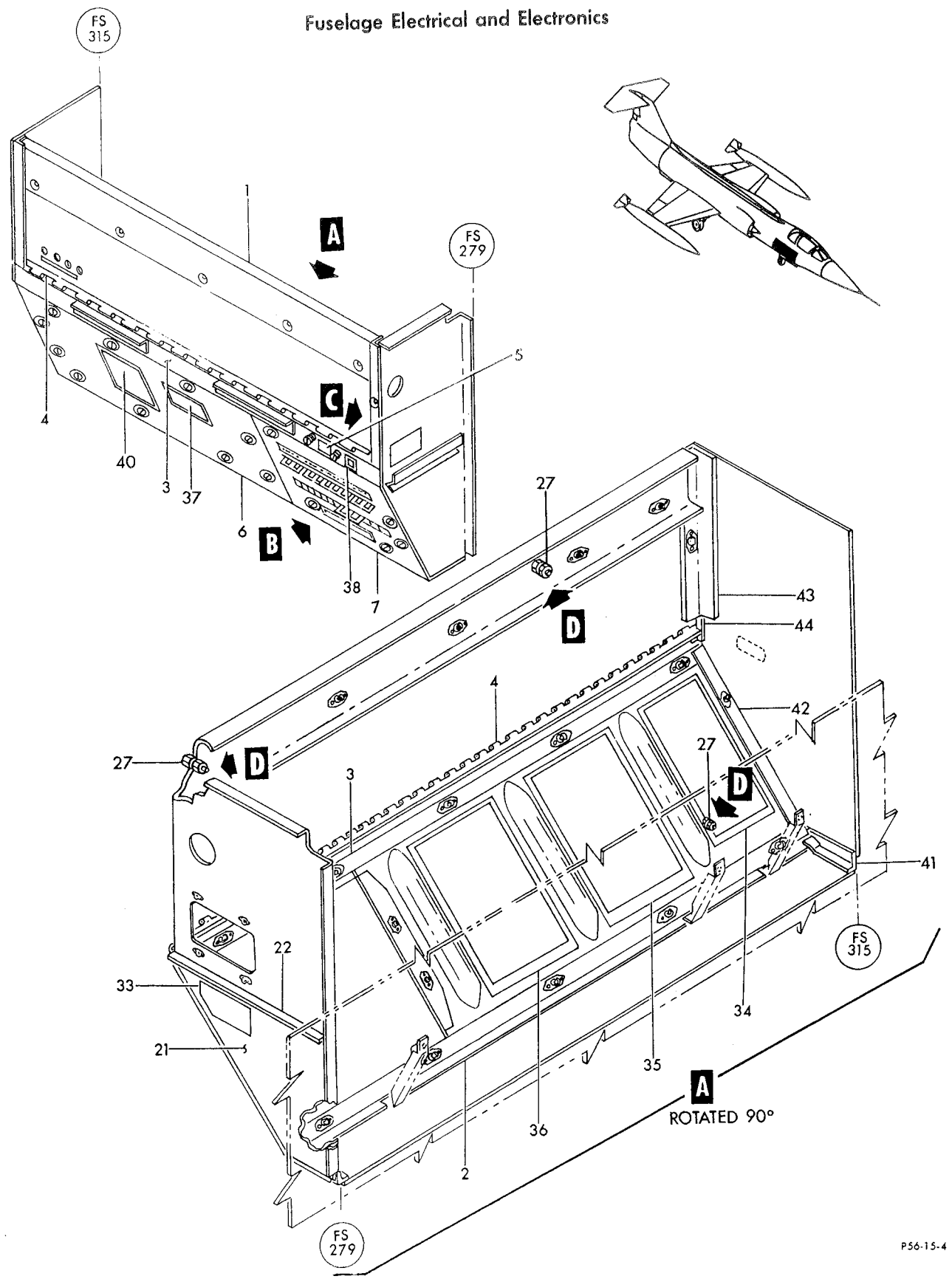

Figure 172— Electrical Load Center Top Relay Panel Structure and Equipment (Sheet 1 of 2)

Figura e particolare	NDR	DENOMINAZIONE 1 2 3 4 5 6 7	Quant.	Codice applicab.
		ELECTRICAL LOAD CENTER TOP RELAY PANEL STRUCTURE AND EQUIPMENT		
172	849952-103	ELECTRICAL INSTL, AC load center (RH only) *(see fig. 30 for reqd)*	REF	
- 1	760289-29	CHANNEL ASSY, AC load center	1	
- 2	850172-101	SUPPORT, AC load center	1	
	760289-103	ANGLE ASSY, AC load center	1	6701-6765
	760289-107	ANGLE ASSY, AC load center	1	6766-
- 3	760289-105	ANGLE, AC load center	1	6701-6765
	760289-109	ANGLE, AC load center	1	6766-
	760289-14	SUPPORT, AC load center	2	
- 4	764677	HINGE, door panel half	1	
- 5	768021-1	DECAL, load center fuel pump test light	1	6701-6765
- 6	787796-1	PANEL ASSY, AC load center	1	
		Attaching Parts		
	4002-2	STUD, camloc fastener (71286)	10	
	4002G	GROMMET, camloc fastener (71286)	10	
	R4G	RING, camloc fastener snap (71286)	10	
		———————*———————		
- 7	849963-101	PANEL ASSY, AC load center circuit breaker	1	
		Attaching Parts		
	4002-2	STUD, camloc fastener (71286)	6	
	4002G	GROMMET, camloc fastener (71286)	6	
	R4G	RING, camloc fastener snap (71286)	6	
		———————*———————		
- 8	785817-1	PLATE, AC load center	9	
		Attaching Parts		
	AN515-6R6	SCREW (88044)	18	
	MS21042L06	NUT (96906)	18	
		———————*———————		
- 9	SS48152	PLUG, button (61864)	4	
-10	SS48152K2220	PLUG, button (61864)	1	
-11	9973-1	CIRCUIT BREAKER, (CB33) 3PST 1.0 Amp magnetic trip free (A0299) (intchg wth 74-648-1-6)	1	
	74-648-1-6	CIRCUIT BREAKER, (CB33) 3PST 1.0 Amp magnetic trip free (74193) (Lockheed spec dwg 613415-1) (intchg wth 9973-1)	REF	
-12	9973-2-5	CIRCUIT BREAKER, (CB19) 3PST 2.5 Amp magnetic trip free (A0299) (intchg wth 74-648-2-5-6)	2	
	74-648-2-5-6	CIRCUIT BREAKER, (CB19) 3PST 2.5 Amp magnetic trip free (74193) (Lockheed spec dwg 613415-2) (intchg wth 9973-2-5)	REF	
-13	9973-7-5	CIRCUIT BREAKER, (CB14) 3PST 7.5 Amp magnetic trip free (A0299) (intchg wth 74-648-7-5-6)	1	
	74-648-7-5-6	CIRCUIT BREAKER, (CB14) 3PST 7.5 Amp magnetic trip free (74193) (Lockheed spec dwg 613415-4) (intchg wth 9973-7-5)	REF	
-14	9973-10	CIRCUIT BREAKER, (CB17) 3PST 10.0 Amp magnetic trip free (A0299) (intchg wth 74-648-10-6)	1	
	74-648-10-6	CIRCUIT BREAKER, (CB17) 3PTS 10.0 Amp magnetic trip free (74193) (Lockheed spec dwg 613415-5) (intchg wth 9973-10)	REF	
		Attaching Parts		
	AN515-6R6	SCREW (88044)	30	
		———————*———————		
-15	MP701	CIRCUIT BREAKER, (CB1) 5 Amp SPST miniature (A3051) (76374) (Lockheed spec dwg 613540-1) (intchg wth 107-205-104)	1	
	107-205-104	CIRCUIT BREAKER, (CB1) 5 Amp SPST miniature (79405) (Lockheed spec dwg 613540-1) (intchg wth MP701)	REF	
-16	MP702	CIRCUIT BREAKER, (CB2) 7.5 Amp SPST miniature (A3051) (76374) (Lockheed spec dwg 613540-3) (intchg wth 107-507-104)	1	
	107-507-104	CIRCUIT BREAKER, (CB2) 7.5 Amp SPST miniature (79405) (Lockheed spec dwg 613540-3) (intchg wth MP702)	REF	
-17	1540-005-1	CIRCUIT BREAKER, (CB32) push-pull trip free 2 phase (76374) (Lockheed spec dwg 740048-3)	1	

Fuselage Electrical and Electronics

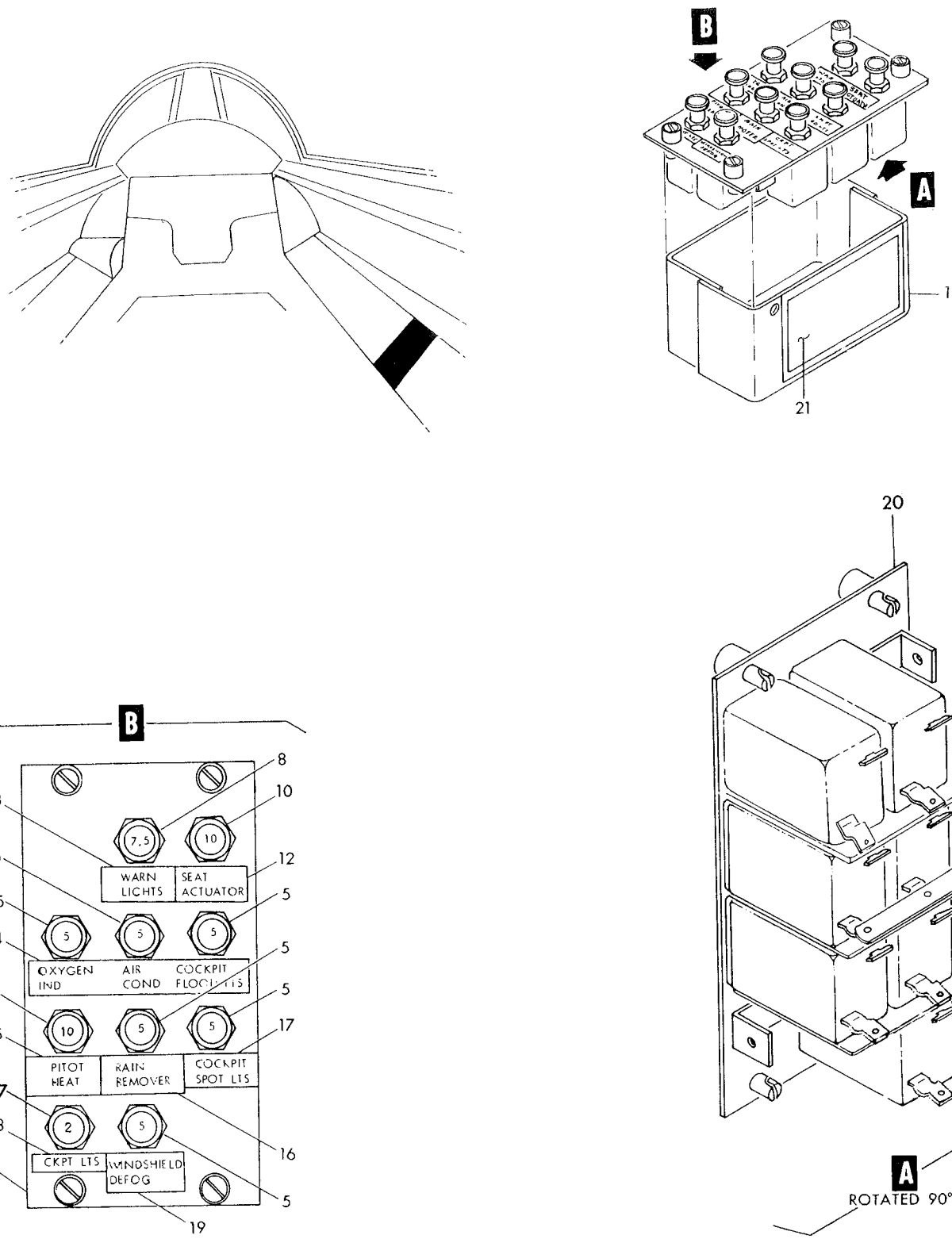

P5u-14-11

Figure 171— Right Hand Cockpit Circuit Breaker Panel

Figura e particolare	NDR	1 2 3 4 5 6 7 DENOMINAZIONE	Quant.	Codice applicab.
		RIGHT HAND COCKPIT CIRCUIT BREAKER PANEL		
171	792896-101	. PANEL ASSY, RH cockpit circuit breaker *(see fig. 160 for reqd)*	REF	
		Attaching Parts		
	PF3 1-2 38	. STUD (72794)	4	
	PS3 1-2	. SPRING (72794)	4	
	PC3 1-2	. CUP (72794)	4	
		*		
- 1	770867-1	. . COVER ASSY, circuit breaker	1	
		Attaching Parts		
	AN515-8R6	. . SCREW (88044)	2	
	AN960D8	. . WASHER (88044)	2	
		*		
- 4	770868-3	. . BUS BAR, miniature circuit breaker	1	
- 5	MP701	. . CIRCUIT BREAKER, (CB1) 5 Amp SPST miniature (A3051) (76374) (Lockheed spec dwg 613540-1) (intchg wth 107-205-104)	6	
	107-205-104	. . CIRCUIT BREAKER, (CB1) 5 Amp SPST miniature (79405) (Lockheed spec dwg 613540-1) (intchg wth MP701)	REF	
- 7	LS7501-2	. . CIRCUIT BREAKER, (CB7) 2 Amp push pull fast trip (36659)	1	
- 8	MP702	. . CIRCUIT BREAKER, (CB2) 7.5 Amp SPST miniature (A3051) (76374) (Lockheed spec dwg 613540-3) (intchg wth 107-507-104)	1	
	107-507-104	. . CIRCUIT BREAKER, (CB2) 7.5 Amp SPST miniature (79405) (Lockheed spec dwg 613540-3) (intchg wth MP702)	REF	
-10	MP703	. . CIRCUIT BREAKER, (CB4) 10 Amp SPST miniature (A3051) (76374) (Lockheed spec 613540-5) (intchg wth 107-210-104)	2	
	107-210-104	. . CIRCUIT BREAKER, (CB4) 10 Amp SPST miniature (79405) (Lockheed spec dwg 613540-5) (intchg wth MP703)	REF	
-11	786340-1	. . INSULATOR, circuit breaker panel	1	
-12	788492-1	. . DECAL, seat actuator	1	
-13	785217-1	. . DECAL, warning light	1	
-14	784095-1	. . DECAL, circuit breaker panel	1	
-15	760391-6	. . DECAL, pitot heat	1	
-16	760391-10	. . DECAL, rain remover	1	
-17	784096-1	. . DECAL, cockpit spot light	1	
-18	786185-1	. . DECAL, cockpit light	1	
-19	784097-1	. . DECAL, windshield defogging	1	
-20	792895-1	. . PLATE, cockpit circuit breaker panel	1	
-21	852035-101	. . DECAL, RH cockpit circuit breaker wiring	1	

Fuselage Electrical and Electronics

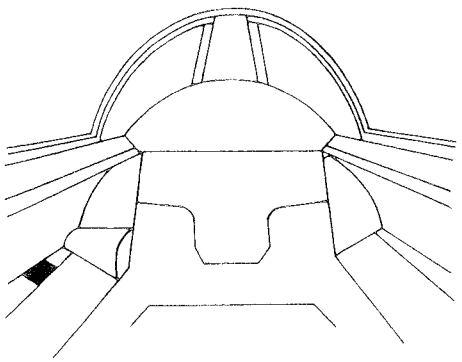

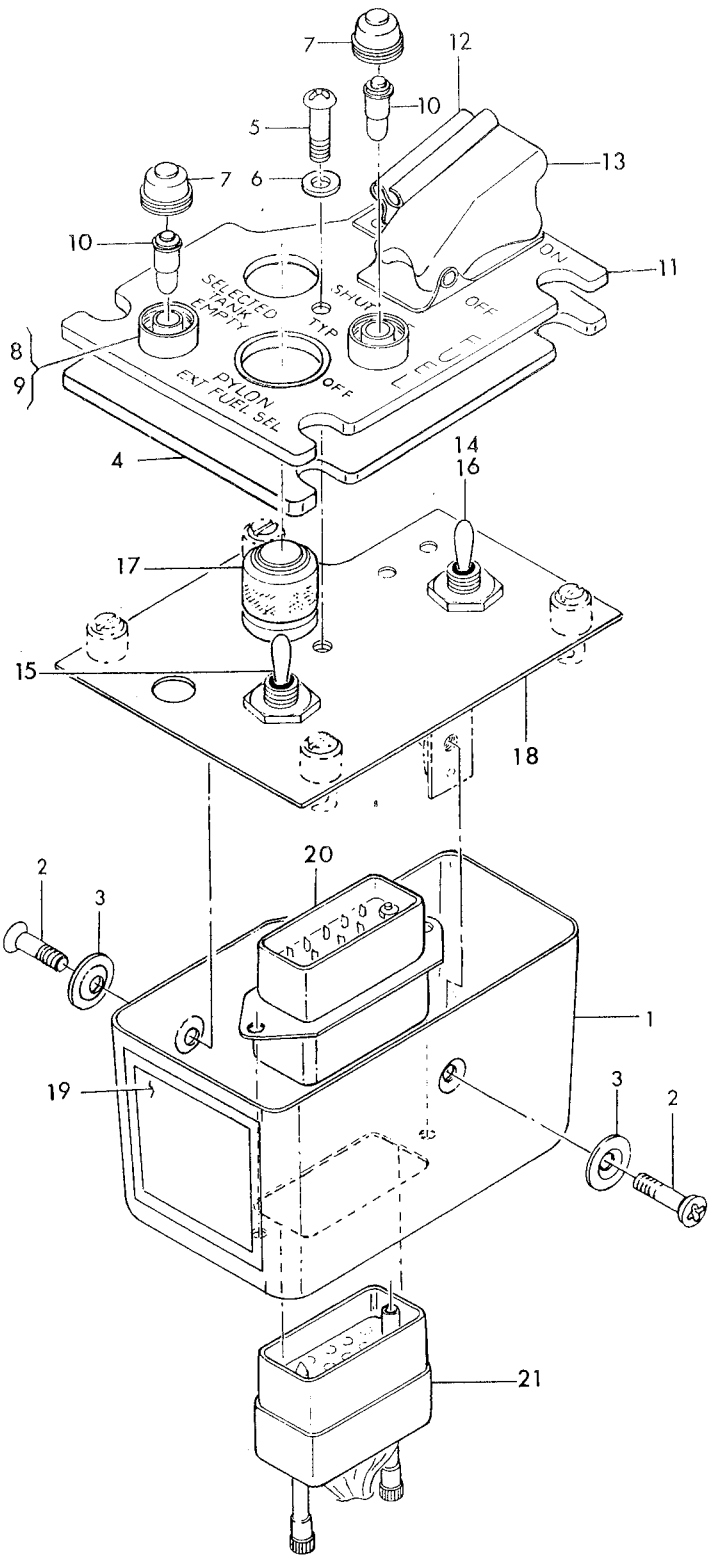

Figure 170— Fuel Control Panel

Figura e particolare	NDR	DENOMINAZIONE 1 2 3 4 5 6 7	Quant.	Codice applicab.
		FUEL CONTROL PANEL		
170	850005-101	. PANEL ASSY, fuel control *(see fig. 163 for reqd)*	REF	
		Attaching Parts		
	PF3 1-2 38	. STUD (72794)	4	
	PS3 1-2	. SPRING (72794)	4	
	PC3 1-2	. CUP (72794)	4	
- 1	850004-101	. . BOX, fuel control cover	1	
		Attaching Parts		
- 2	AN507-832R8	. . SCREW (88044)	2	
- 3	A3135-017-24A	. . WASHER, dimpled (78553)	2	
	850002-101	. . PANEL ASSY, fuel control circuit	1	
- 4	850002-103	. . . PANEL, fuel control circuit	1	
		Attaching Parts		
- 5	AN515B6R8	. . SCREW (88044)	1	
- 6	LS4446-6	. . WASHER, synthetic rubber (36659)	1	
	LS9093B3	. . . LIGHT ASSY, edge lighted panel (36659)	2	
- 7	103-3	. . . . CAP ASSY, edge lighted panel (04211)	1	
- 8	9C20005	. . . SLEEVE (07199)	1	
- 9	9C20006	. . . PIN (07199)	1	
-10	LS9030-327	. . LAMP, incandescent (blue white) (36659)	2	
-11	850003-101	. . PANEL, fuel control plastic	1	
-12	763637	. . LOCK, fuel shutoff switch guard spring	1	
		Attaching Parts		
	AN515-6R8	. . SCREW (88044)	1	
	MS35265-30	. . SCREW (96906)	1	
	AN960D6	. . WASHER (88044)	2	
	MS21042L6	. . NUT (96906)	2	
-13	772591-1	. . GUARD, toggle switch	1	
-14	MS24524-23	. . SWITCH (shutoff) (96906)	1	
-15	MS35058-21	. . SWITCH, (S16) (pylon external fuel selector) (96906)	1	
-16	LS2805-3	. . WASHER, aluminum (36659)	1	
-17	FPC960R	. . LIGHT, (DS3) press to test miniature indicator (A1587) (Alternate to VM909-2)	1	
	VM909-2	. . LIGHT, (DS3) press to test miniature indicator (87034) (Lockheed spec dwg 618409-3) (Alternate to FPC960R)	REF	
	MS25237-327	. . LAMP (96906)	1	
	850001-101	. . PANEL ASSY, fuel control mounting	1	
-18	850000-101	. . . PANEL, fuel control mounting	1	
-19	850009-101	. . CHART, fuel control wiring	1	
	849502-101	. . HARNESS ASSY, fuel control panel	1	
	785284-7	. . . RECEPTACLE ASSY, 14 pin control panel	1	
-20	XMRA14PF2A116	. . . . CONNECTOR, (J173) receptacle (P-115 disc.) (81312)	1	
	849735-101	. HARNESS ASSY, fuel control panel P-115 disc. *(see fig. 159 for reqd)*	REF	
-21	XMRA14SM1A106	. . CONNECTOR, (P71) plug (P-115 disc.) (81312)	1	

Fuselage Electrical and Electronics

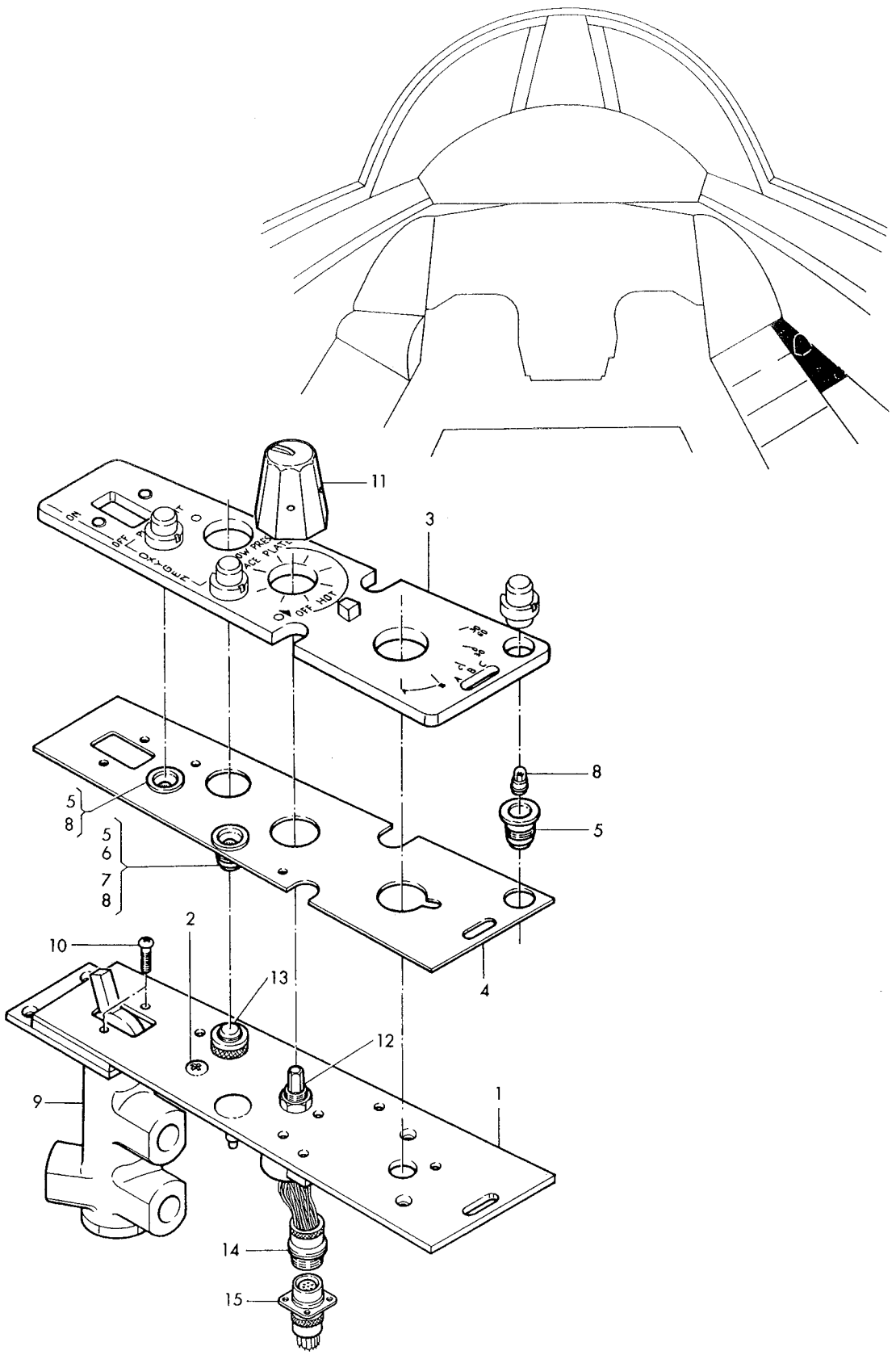

Figure 169–Edge Lighted Cursor Range and Face Plate Control and Pressure Suit Oxygen Panels

Figura e particolare	NDR	DENOMINAZIONE 1 2 3 4 5 6 7	Quant.	Codice applicab.
		EDGE LIGHTED CURSOR RANGE AND FACE PLATE CONTROL AND PRESSURE SUIT OXYGEN PANELS		
169	851471-101	. PANEL ASSY, edge lighted cursor range and face plate control *(see fig. 163 for reqd)*	REF	
		Attaching Parts		
	NAS514P832-8	. SCREW (Fwd) (80205)	2	
	NAS602-12	. SCREW (aft) (80205)	2	
		*		
- 1	850359-103	. . PANEL ASSY, edge lighted cursor range and face plate control	1	
	850359-107	. . . PANEL, edge lighted cursor range and face plate control	1	
- 2	NAS514P1032-12	. . . . SCREW (grd stud) (80205)	1	
	MS35337-43	. . . . WASHER (grd stud) (96906)	1	
	AN345-10	. . . . NUT (grd stud) (88044)	1	
	AN960-10	. . . . WASHER (grd stud) (88044)	1	
	LS2816-4	. . . . WASHER (grd stud) (36659)	1	
	MS21042L3	. . . . NUT (grd stud) (96906)	1	
	850359-119	. . . . PLATE, edge lighted	1	
	850361-101	. . PANEL ASSY, edge lighted plastic	1	
- 3	850361-103	. . . PANEL, edge lighted plastic	1	
	850360-101	. . PANEL ASSY, edge lighted printed circuit	1	
- 4	850360-103	. . . PANEL, edge lighted printed circuit	1	
	LS9093B3	. . . LIGHT ASSY, edge lighted panel (36659)	3	
- 5	103-3	. . . . CAP ASSY, edge lighted panel (04211)	1	
- 6	9C20005	. . . SLEEVE (07199)	1	
- 7	9C20006	. . . PIN (07199)	1	
- 8	LS9030-327	. . LAMP, incandescent (blue white) (36659)	3	
- 9	FR61A1	. . VALVE, press suit oxygen supply control (A1996) (99251) (Lockheed spec dwg 654224-1) (see T.O. 15X8-7-18-3) *(see fig. 136)*	1	
		Attaching Parts		
-10	AN515B6R14	. . SCREW (88044)	2	
		*		
-11	Q2714	. . KNOB ASSY, control (04211)	1	
-12	C30171	. . SWITCH, (S116) (face plate control) (83008)	1	
-13	FPC960R	. . LIGHT, (DS3) press to test miniature indicator (A1587) (Alternate to VM909-2)	1	
	VM909-2	. . LIGHT, (DS3) press to test miniature indicator (87034) (Lockheed spec dwg 618409-3) (alternate to FPC960R)	REF	
	LS7500-327	. . LAMP, incandescent (36659)	1	
	849712-101	. . HARNESS ASSY, oxygen pressure suit panel	1	
-14	DM9700-19P004	. . . CONNECTOR, (P212) plug (P-23 disc.) (11139)	1	
	849694-101	. HARNESS ASSY, heat and temperature control panel *(see fig. 160 for reqd)*	REF	
-15	DM9606-19S004	. . CONNECTOR, (J114) recp (P-23 disc.) (17419) *(see fig. 160 for reqd)*	REF	

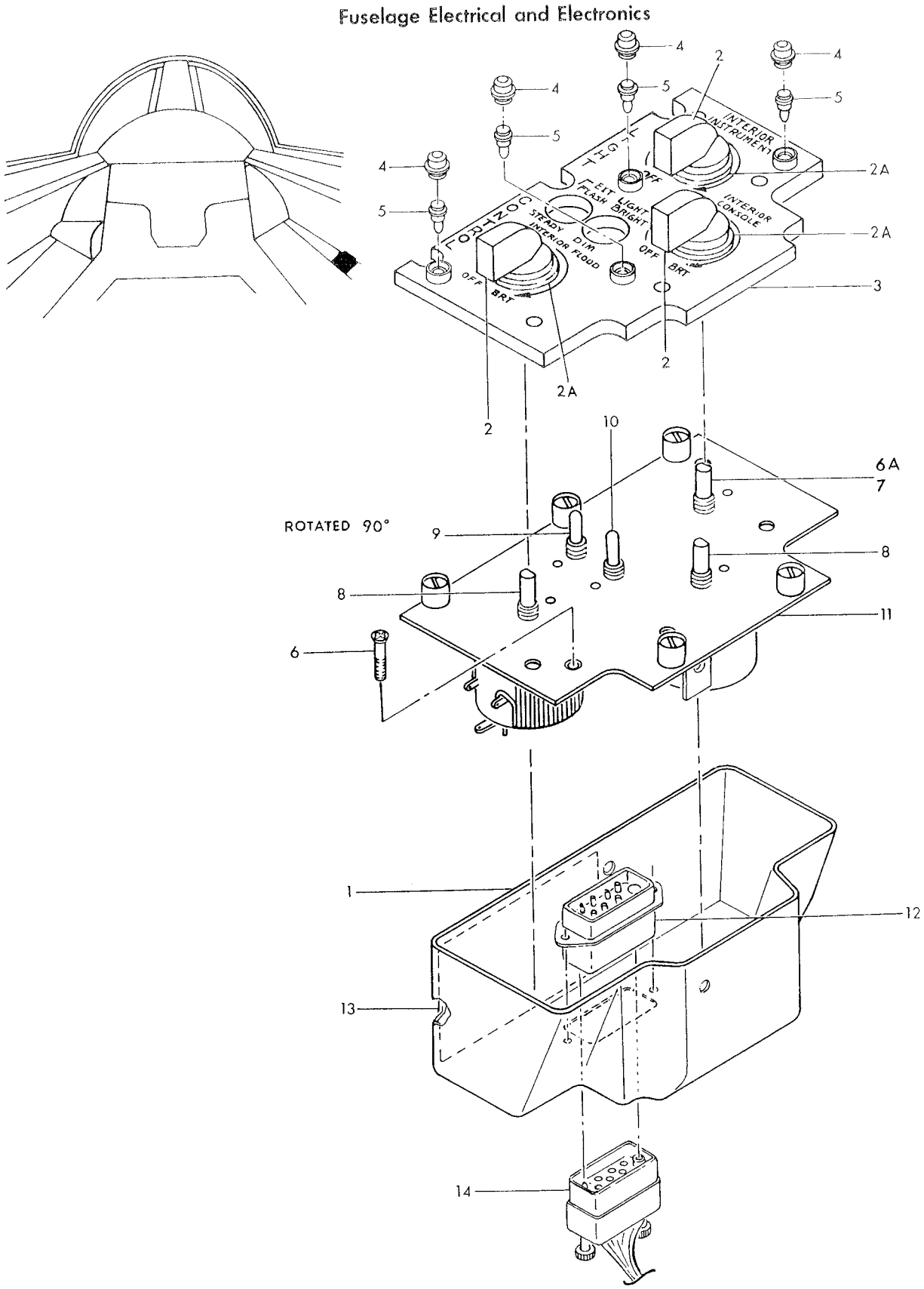

Figure 168—Lighting Control Panel

Figura e particolare	NDR	1 2 3 4 5 6 7 DENOMINAZIONE	Quant.	Codice applicab.
		LIGHTING CONTROL PANEL		
168	850171-101	. PANEL ASSY, lighting control *(see fig. 163 for reqd)*	REF	
		Attaching Parts		
	PF3 1-2 38	. STUD (72794)	5	
	PS3 1-2	. SPRING (72794)	5	
	PC3 1-2	. CUP (72794)	5	
- 1	783327-1	. . BOX, lighting control panel cover	1	
		Attaching Parts		
	AN507-832R8	. . SCREW (88044)	2	
	A3135-017-24A	. . WASHER, dimpled (78553)	2	
	850171-105	. . KNOB ASSY, control	3	
- 2	Q2710	. . . KNOB, control (04211)	1	
- 2A	852012-101	. . . WASHER, lighting control panel assy	1	
- 3	250334-13	. . PANEL, edge lighted lighting control (A0210) (alternate to 240334-13)	1	
	240334-13	. . PANEL, edge lighted lighting control (04211) (Lockheed spec dwg 619334-7) (alternate to 250334-13)	REF	
		Attaching Parts		
	AN515B6R8	. . SCREW (88044)	4	
	LS4446-6	. . WASHER, synthetic rubber (36659)	4	
		Partial Breakdown Follows		
	103C	. . . LIGHT ASSY (edge lighted panel) (04211)	3	
	115HGC	. . . LIGHT ASSY, hot and grd (edge lighted panel) (04211)	1	
- 4	103-3	. . . . CAP ASSY (edge lighted panel) (04211)	1	
- 5	LS9030-327	. . LAMP, incandescent blue (36659)	4	
- 6	AN507-1032R12	. . SCREW (grd stud) (88044)	1	
	LS2816-4	. . WASHER, countersunk (grd stud) (36659)	1	
	MS35338-43	. . WASHER (grd stud) (96906)	1	
	AN345-10	. . NUT (grd stud) (88044)	1	
	AN960-10	. . WASHER (grd stud) (88044)	1	
	MS21042L3	. . NUT (grd stud) (96906)	1	
- 6A	AN960PD616L	. . WASHER (88044)	1	6766-
- 7	8835	. . AUTOTRANSFORMER, (T16) variable power (lighting control) (83008) (Lockheed spec dwg 617226-11)	1	
- 8	8656	. . AUTOTRANSFORMER, (T12) variable power (lighting control) (83008) (Lockheed spec dwg 617226-9) (intchg wth 5-1222)	2	
	5-1222	. . AUTOTRANSFORMER, (T12) variable power (lighting control) (58474) (Lockheed spec dwg 617226-9) (intchg wth 8656)	REF	
- 9	MS35058-21	. . SWITCH, (S16) (flash and steady) (96906)	1	
-10	MS35058-23	. . SWITCH (bright and dim) (96906)	1	
	850171-103	. . MOUNTING ASSY, lighting control panel	1	
-11	250334-1	. . . PLATE, pnl mtg (A0210) (Alternate to 240334-1)	1	
	240334-1	. . . PLATE, pnl mtg (04211) (Lockheed spec dwg 619334-1) (Alternate to 250334-1)	REF	
	849503-101	. . HARNESS ASSY, lighting control panel	1	
	785284-3	. . . RECEPTACLE ASSY, 14 pin control panel	1	
		Attaching Parts		
	AN515-6R6	. . . SCREW (88044)	2	
	AN960D6	. . . WASHER (88044)	2	
-12	EMRA14PF2A116	. . . . CONNECTOR, (J177) recp (P-112 disc.) (81312)	1	
-13	851306-101	. . DECAL, lighting control panel	1	
	849705-101	. HARNESS ASSY, warning light and dimming relay to bhd disc. *(see fig. 160 for reqd)*	REF	6701-6765
	852139-101	. HARNESS ASSY, warning light and dimming relay to bhd disc. *(see fig. 160 for reqd)*	REF	6766-6815
	852282-101	. HARNESS ASSY, warning light and dimming relay to bhd disc. *(see fig. 160 for reqd)*	REF	6816-
-14	EMRA14SM1A106	. . CONNECTOR, (P58) plug (P-112 disc.) (81312)	1	

Figura e particolare	NDR	DENOMINAZIONE	Quant.	Codice applicab.
167-22	MS24523-23	SWITCH, (S25) toggle SPDT (trim select switch) (96906)	1	
-23	MS25224-3	GUARD (trim select switch) (96906)	1	
-23A	MS35058-27	SWITCH, (S30) SPDT automatic pitch control cutout (96906)	1	6701-6815
	785342-101	SHELF INSTL, LH cockpit *(see fig. 30 for reqd)*	REF	6701-6815
	785342-107	SHELF INSTL, LH cockpit *(see fig. 30 for reqd)*	REF	6816-
	FL0400-111	NAMEPLATE INSTL, LH console trim strip (A0019)	1	6701-6815
	852335-101	NAMEPLATE INSTL, LH console trim strip	1	6816-
-24	FL0397-000	PLATE, cockpit auxiliary trim panel (A0019)	1	6701-6815
-25	FL0398-104	DECAL, rudder trim (A0019)	1	6701-6815
	852337-101	DECAL, rudder trim	1	6816-
-26	FL0398-105	DECAL, left right (A0019)	1	6701-6815
	852338-101	DECAL, left-right switch rudder trim	1	6816-
-27	762718-3	DECAL, auxiliary trim control	1	
	850521-101	PANEL ASSY, control engine air inlet doors *(see fig. 163 for reqd)*	REF	6701-6790; 6831-
-27A	852801-107	A. PANEL ASSY, engine air inlet doors and SPU exhaust door *(see fig. 163 for reqd)*	REF	6791-6830
-28	850522-101	PANEL ASSY, control	1	6701-6790; 6831-
		Attaching Parts		
	PF3 1-2 38A	STUD (72794)	2	
	PS3 1-2	SPRING (72794)	2	
	PC3 1-2	CUP (72794)	2	
-29	850531-101	CHART, engine air inlet doors wiring	1	
	849734-101	HARNESS ASSY, LH cockpit P-113, P-117, P-118 and P-119 disc to bhd 255 *(see fig. 159 for reqd)*	REF	6701-6740
	852091-101	HARNESS ASSY, LH cockpit P-113, P-117, P-118 and P-119 disc. to bhd 255 *(see fig. 159 for reqd)*	REF	6741-
-31	8906K1084	SWITCH, toggle (engine air inlet doors) (15605) (Lockheed spec dwg 740020-5)	1	
-32	MS25214-2	GUARD, engine air inlet doors switch (96906)	1	
-33	MS25331-3	LIGHT, (DS110) inlet door open (96706)	1	
	MS25231-1819	LAMP (96906)	1	6791-6830
-33A	SS51051	A. PLUG, button (61864)		

A - Only per partial incorporation of SPU system

Fuselage Electrical and Electronics

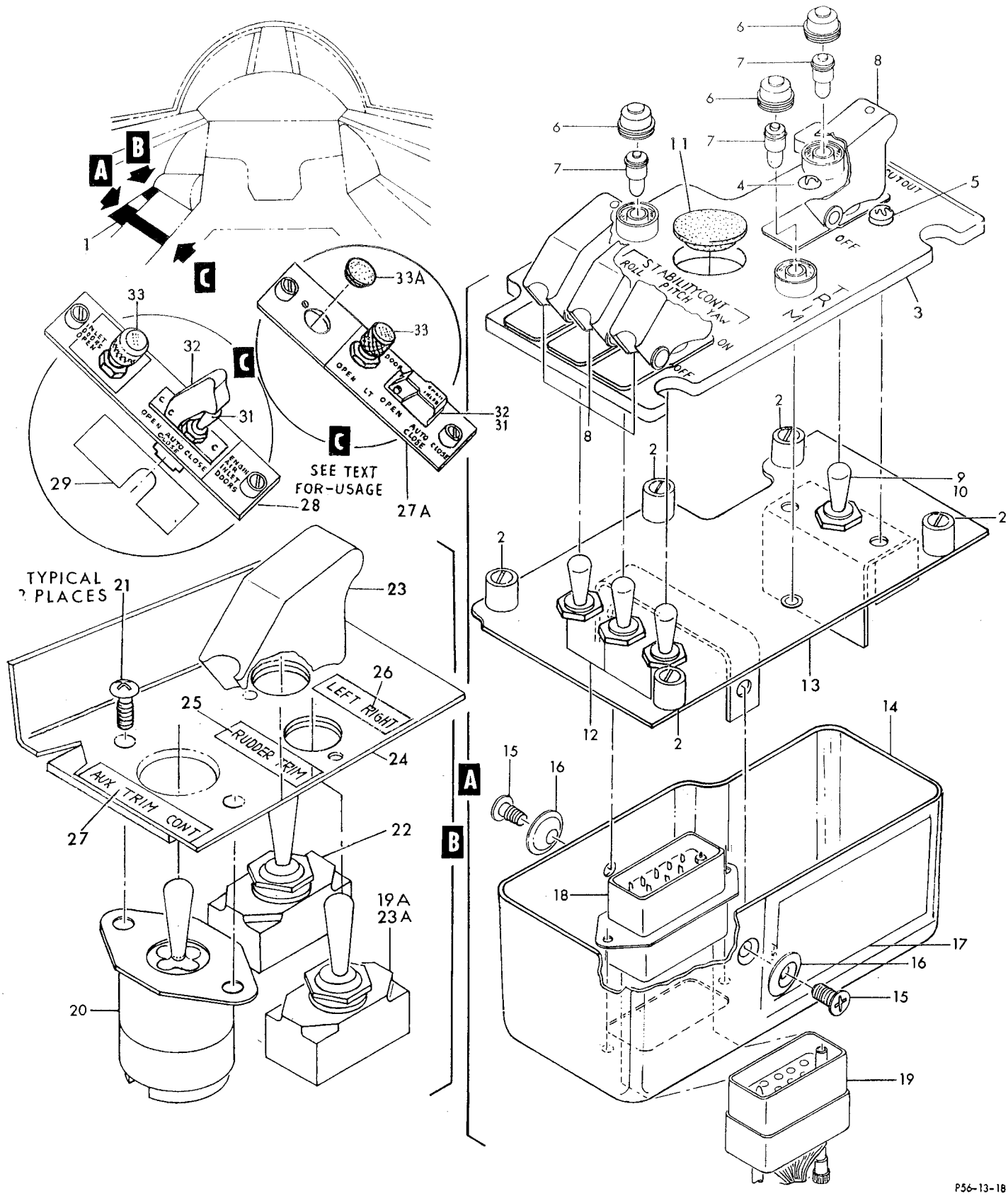

Figure 167—Directional Trim and Stability Control Panel and Auxiliary Trim Control Switches and Control Eng Air inlet doors

Figura e particolare	NDR	1 2 3 4 5 6 7 DENOMINAZIONE	Quant.	Codice applicab.
		DIRECTIONAL TRIM AND STABILITY CONTROL PANEL AND AUXILIARY TRIM CONTROL SWITCHES AND CONTROL ENG AIR INLET DOORS		
167- 1	FL0400-105	. PANEL ASSY, APC cutout and stability control (A0019) *(see fig. 163 for reqd)*	REF	6701-6815
	852348-101	. PANEL ASSY, APC cutout and stability control *(see fig. 163 for reqd)* . .	REF	6816-
		Attaching Parts		
- 2	PF3 1-2 38A	. STUD (72794)	5	
	PS3 1-2	. SPRING (72794)	5	
	PC3 1-2	. CUP (72794)	5	
		——————☼——————		
- 3	250336-5	. . PANEL ASSY, edge lighted trim control (A0210) (alternate to 240336-9)	1	6701-6815
	240336-9	. . PANEL ASSY, edge lighted trim control (04211) (Lockheed spec dwg 619336-5) (alternate to 250336-5)	REF	6701-6815
	852352-101	. . PANEL ASSY, edge lighted trim control	1	6816-
		Attaching Parts		
- 4	AN515B6R8	. . SCREW (88044)	1	6701-6815
- 5	AN500A6-8	. . SCREW (88044)	1	6701-6815
	MS35214-27	. . SCREW (96906)	2	6816-
	LS4446-6	. . WASHER, synthetic rubber (36659)	2	
		——————☼——————		
		Partial Breakdown Follows		
	103C	. . . LIGHT ASSY, edge lighted panel (04211)	2	
	115HGC	. . . LIGHT ASSY, hot and grd panel (04211)	1	
- 6	103-3	. . . . CAP ASSY (04211)	1	
- 7	LS9030-327	. . LAMP, incandescent blue (36659) (Reqd on 250336-5)	3	
- 8	MS25224-3	. . GUARD (96906)	4	
- 9	MS35058-23	. . SWITCH (SPDT automatic pitch control cutout) (96906)	1	
-10	AN960-816L	. . WASHER (88044)	1	
-11	SS50727	. . PLUG, button (61864)	1	6701-6815
-12	A3-32-103	. . SWITCH, (S29) toggle (stability control) (81640)	3	
	850142-103	. . PLATE ASSY, trim control panel	1	6701-6815
	852348-103	. . PLATE ASSY, trim control panel	1	6816-
-13	250336-1	. . . PLATE, edge lighted mounting (A0210) (alternate to 240336-1) . .	1	6701-6815
	240336-1	. . . PLATE, edge lighted mounting (04211) (Lockheed spec dwg 619336-1) (alternate to 250336-1)	REF	6701-6815
	852351-101	. . . PLATE, edge lighted mounting	1	6816-
-14	783347-1	. . BOX, trim control panel cover	1	
		Attaching Parts		
-15	AN507-832R6	. . SCREW (88044)	2	6701-6815
	MS24693-48	. . SCREW (96906)	2	6816-
-16	A3135-017-24A	. . WASHER, dimpled (78553)	2	
		——————☼——————		
-17	FL0400-107	. . DECAL, panel wiring (A0019)	1	6701-6815
	852349-101	. . DECAL, panel wiring	1	6816-
	849506-101	. . HARNESS ASSY, trim control panel	1	6701-6815
	852286-101	. . HARNESS ASSY, trim control panel	1	6816-
	785284-1	. . . RECEPTACLE ASSY, 14 pin control panel	1	
-18	EMRA14PF2B116	. . . . CONNECTOR, (J285) recp (P-116 disc.) (81312)	1	
	849736-101	. HARNESS ASSY, cockpit trim panel P-116 disc. *(see fig. 159 for reqd)* . .	REF	6701-6815
	852345-101	. HARNESS ASSY, cockpit trim panel P-116 disc. *(see fig. 159 for reqd)* . .	REF	6816-
-19	EMRA14SM1B106	. . CONNECTOR, (P59) plug (P-116 disc.) (81312)	1	
	849726-101	. HARNESS ASSY, cockpit auxiliary trim panel *(see fig 159 for reqd)* . .	REF	6701-6815
	852339-101	. HARNESS ASSY, cockpit auxiliary trim panel *(see fig. 159 for reqd)* . .	REF	6816-
-19A	MS35058-27	. . SWITCH, (S30) (Rudder trim) (96906)	1	6816-
-20	446154	. . SWITCH, (S68) enclosed toggle (control surface auxiliary trim switch) (81579) (Lockheed spec dwg 613584-3) (use 304-4401 for spares replacement)	1	
	304-4401	. . SWITCH, (S68) enclosed toggle (control surface auxiliary trim switch) (81579) (Spares only) (Lockheed spec dwg 613584-101)	REF	
		Attaching Parts		
-21	AN515-6R6	. . SCREW (88044)	2	
		——————☼——————		

Figura e particolare	NDR	1 2 3 4 5 6 7	DENOMINAZIONE	Quant.	Codice applicab.
			Attaching Parts		
166	AN500A6-8		SCREW (88044)	1	6701-6815
	MS35214-27		SCREW (96906)	1	6816-
	AN515B6R8		SCREW (88044)	1	6701-6815
	MS35265-30		SCREW (96906)	1	6816-
	LS4446-6		WASHER (36659)	2	
			——————✲——————		
-25	849941-101		DECAL, AIM-7N thermal override switch	1	
-26	787160-1		DECAL, antenna select switch	1	
-27	796791-1		DECAL, rocket select switch	1	
-28	2TL1-10E		SWITCH, (S96) toggle (antenna select) (91929)	1	
-29	MS35058-23		SWITCH (rocket select) (96906)	1	
-30	SS51051		PLUG, button (61864)	1	
-31	FL0396-000		BRACKET ASSY, LH circuit breaker console (A0019)	1	6701-6815
	852341-101		BRACKET ASSY, LH circuit breaker console	1	6816-
-32	700-015-7		CIRCUIT BREAKER, (CB30) 7.5 Amp SPST miniature (76374) (Lockheed spec dwg 740034-3) (Intrch wth 254-507-102 and 2107D)	1	
	254-507-102		CIRCUIT BREAKER, (CB30) 7.5 Amp SPST miniature (79405) (Lockheed spec dwg 740034-3) (Intrch wth 700-015-7 and 2107D)	REF	
	2107D		CIRCUIT BREAKER, (CB30) 7.5 Amp SPST miniature (79405) (Lockheed spec dwg 740034-3) (Intrch with 700-015-7 and 254-507-102)	REF	
			Attaching Parts		
	AN507-632R6		SCREW (88044)	3	6701-6815
	MS24693-26		SCREW (96906)	3	6816-
	AN960D6		WASHER (88044)	2	
	MS21042L06		NUT (96906)	2	
			——————✲——————		
-33	FL0369-101		DECAL, LH circuit breaker cockpit shelf (A0019)	1	6701-6815
	852344-101		DECAL, LH circuit breaker cockpit shelf	1	6816-
	FL0370-101		CHART, LH circuit breaker wiring (A0019)	1	6701-6815
	852343-101		CHART, LH circuit breaker wiring	1	6816-
-34	FL0368-101		GUARD (A0019)	1	6701-6815
	852342-101		COVER, circuit breaker	1	6816-
-35	SS50727		PLUG, button (61864)	1	
-36	T98291-1	A.	HOOK, switch (A0019)	4	

A - Reqd per AA.1F-104S-OT-104

Fuselage Electrical and Electronics

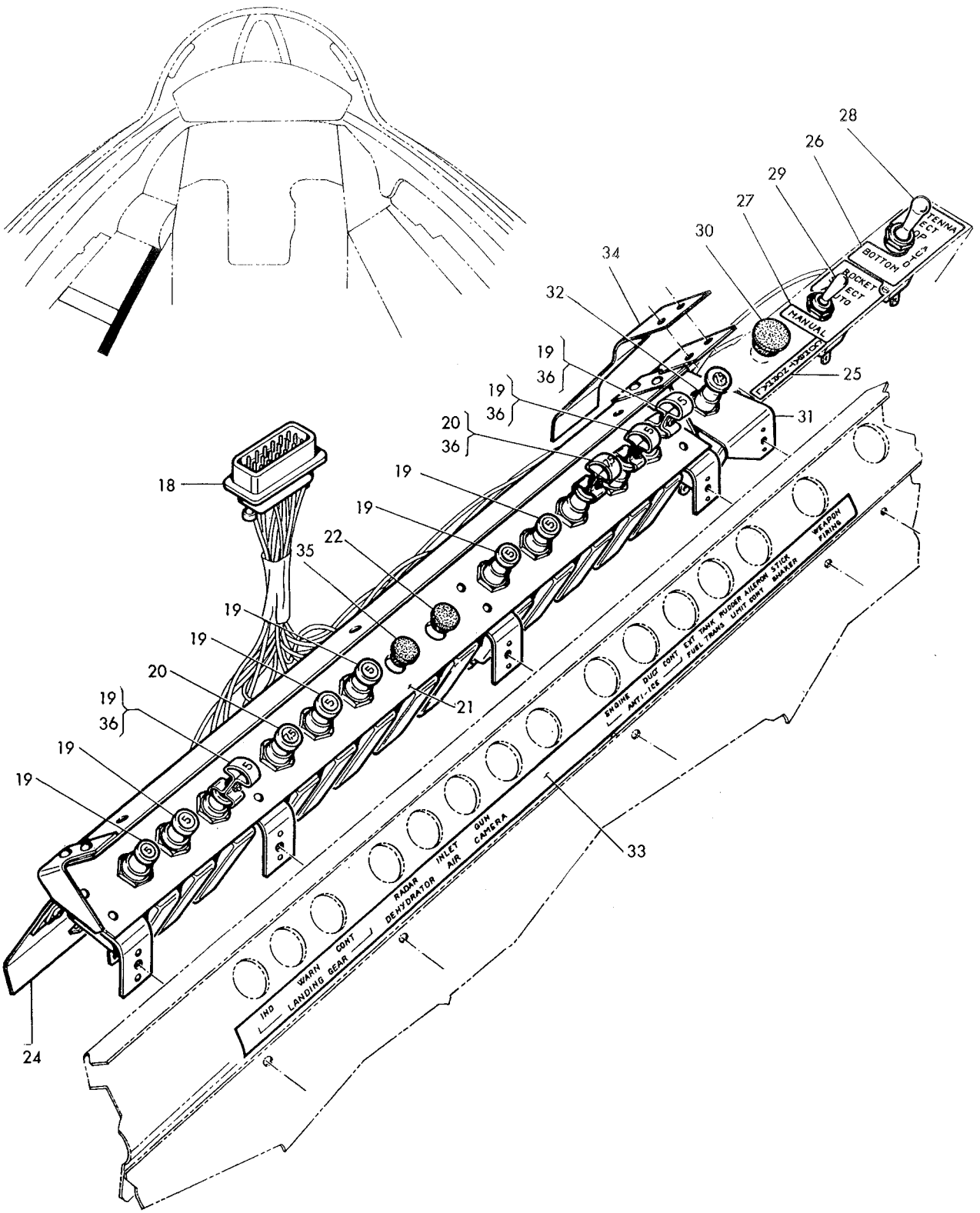

Figure 166–Left Cockpit Circuit Breaker Panels (Sheet 2 of 2)

Fuselage Electrical and Electronics

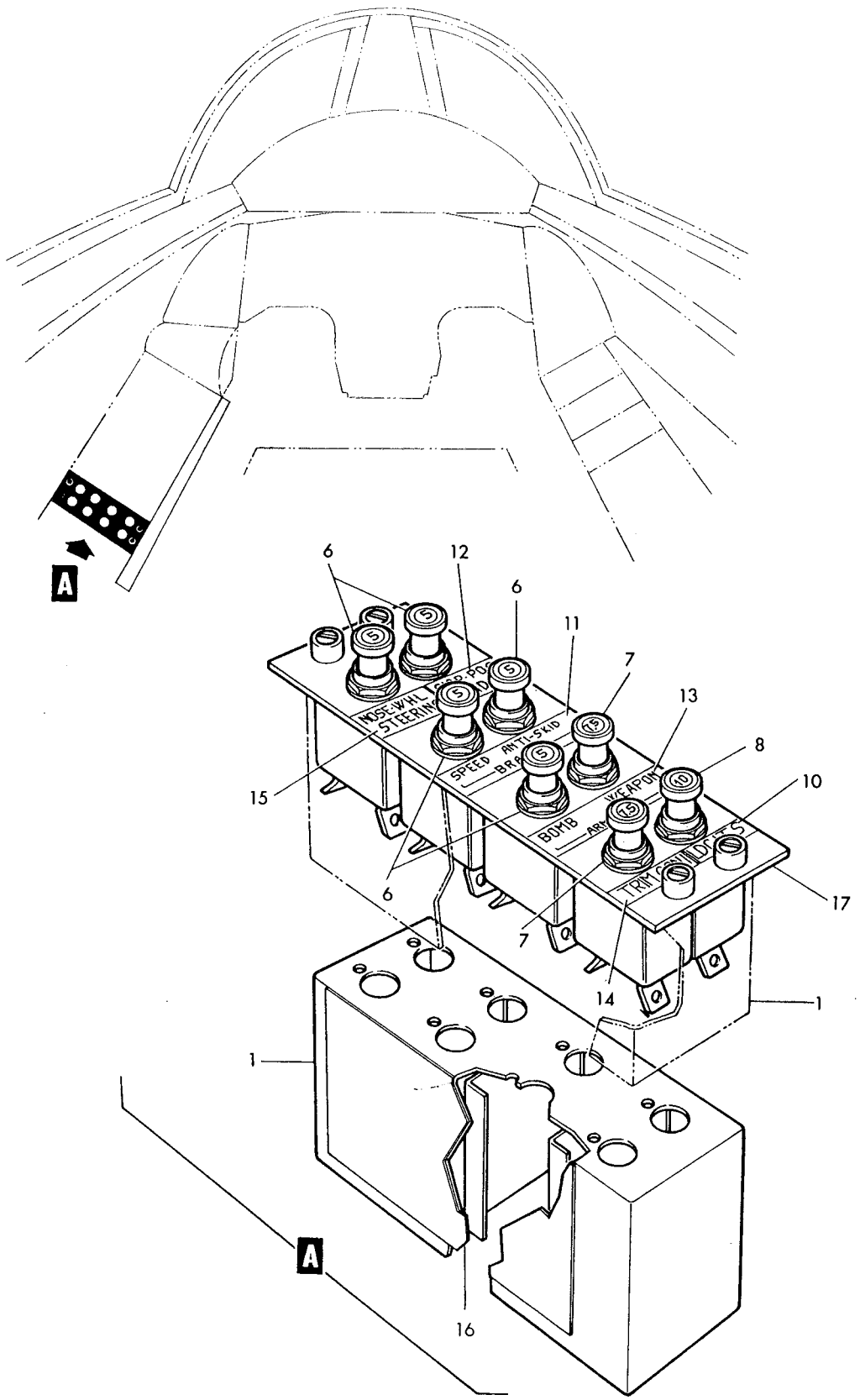

Figure 166–Left Hand Cockpit Circuit Breaker Panels (Sheet 1 of 2)

Figura e particolare	NDR	DENOMINAZIONE 1 2 3 4 5 6 7	Quant.	Codice applicab.
		LEFT HAND COCKPIT CIRCUIT BREAKER PANELS		
166	FL0404-000	. PANEL ASSY, LH cockpit circuit breaker (A0019) *(see fig. 159 for reqd)* .	REF	
- 1	FL0403-101	. . COVER ASSY, circuit breaker (A0019)	1	
- 6	MP701	. . CIRCUIT BREAKER, (CB1) 5 Amp SPST miniature (A3051) (76374) (Lockheed spec 613540-1) (intrch wth 107-205-104)	5	
	107-205-104	. . CIRCUIT BREAKER, (CB1) 5 Amp SPST miniature (79405) (Lockheed spec dwg 613540-1) (intrch wth MP701)	REF	
- 7	MP702	. . CIRCUIT BREAKER, (CB2) 7.5 Amp SPST miniature (A3051) (76374) (Lockheed spec dwg 613540-3) (intrch wth 107-507-104)	2	
	107-507-104	. . CIRCUIT BREAKER, (CB2) 7.5 Amp SPST miniature (79405) (Lockheed spec dwg 613540-3) (intrch wth MP702)	REF	
- 8	MP703	. . CIRCUIT BREAKER, (CB4) 10 Amp SPST miniature (A3051) (76374) (Lockheed spec dwg 613540-5) (intrch wth 107-210-104)	1	
	107-210-104	. . CIRCUIT BREAKER, (CB4) 10 Amp SPST miniature (79405) (Lockheed spec dwg 613540-5) (intrch wth MP703)	REF	
-10	FL0398-103	. . DECAL, landing lights (A0019)	1	
-11	784631-1	. . DECAL, brakes	1	
-12	768044-1	. . DECAL, flap position indicator	1	
-13	784094-1	. . DECAL, arming	1	
-14	772246-1	. . DECAL, trim control	1	
-15	784628-1	. . DECAL, nose wheel steering	1	
-16	FL0408-101	. . DECAL, LH cockpit circuit breaker (A0019)	1	
-17	FL0402-101	. . PANEL ASSY, cockpit circuit breaker (A0019)	1	
	FL0367-000	. CIRCUIT BREAKER INSTL, LH cockpit shelf (A0019) *(see fig. 163 for reqd)*	REF	6701-6815
	852340-101	. CIRCUIT BREAKER INSTL, LH cockpit shelf *(see fig. 163 for reqd)* . .	REF	6816-
	FL0367-113	. . CIRCUIT BREAKER ASSY, LH cockpit shelf (A0019)	1	6701-6815
	852354-101	. . CIRCUIT BREAKER ASSY, LH cockpit shelf	1	6816-
		Attaching Parts		
	NAS517-3-2	. . SCREW (80205)	4	
	AN507-632R5	. . SCREW (88044)	3	6701-6815
	MS24693-25	. . SCREW (96906)	3	6816-
	MS21042L06	. . NUT (96906)	3	
		*		
	FL0367-107	. . . HARNESS ASSY, circuit breaker panel P-127 disc. to trim strip (A0019)	1	6701-6815
	849750-101	. . . HARNESS ASSY, circuit breaker panel P-127 disc. to trim strip .	1	6816-
-18	EMRA34PM1A106	. . . . CONNECTOR, (P65) plug (P-127 disc.) (81312)	1	
-19	700-015-5	. . . CIRCUIT BREAKER, (CB29) 5 Amp SPST miniature (76374) (Lockheed spec dwg 740034-1) (intrch wth 254-205-102 and 2105D) . . .	9	
	254-205-102	. . . CIRCUIT BREAKER, (CB29) 5 Amp SPST miniature (79405) (Lockheed spec dwg 740034-1) (intrch wth 700-015-5 and 2105D) . .	REF	
	2105D	. . . CIRCUIT BREAKER, (CB29) 5 Amp SPST miniature (79405) (Lockheed spec dwg 740034-1) (intrch wth 700-015-5 and 254-205-102) .	REF	
-20	700-015-7	. . . CIRCUIT BREAKER, (CB30) 7.5 Amp SPST miniature (76374) (Lockheed spec dwg 740034-3) (intrch wth 254-507-102 and 2107D) .	2	
	254-507-102	. . . CIRCUIT BREAKER, (CB30) 7.5 Amp SPST miniature (79405) (Lockheed spec dwg 740034-3) (intrch wth 700-015-7 and 2107D) . .	REF	
	2107D	. . . CIRCUIT BREAKER, (CB30) 7.5 Amp SPST miniature (79405) (Lockheed spec dwg 740034-3) (intrch wth 700-015-7 and 254-507-102) .	REF	
-21	793768-3	. . . SUPPORT ASSY, LH cockpit shelf	1	
-22	SS50727	. . PLUG, button (61864)	1	
-24	793771-1	. . SHIELD, LH circuit breaker	1	
		Attaching Parts		
	AN515-6R6	. . SCREW (88044)	4	6701-6815
	MS35026-228	. . SCREW (96906)	4	6816-
	AN960D6	. . WASHER (88044)	4	
		*		
	FL0367-101	. . PLATE, antenna select switch (A0019)	1	6701-6815
	849940-101	. . PLATE, antenna select switch	1	6816-

Figura e particolare	NDR	1	2	3	4	5	6	7	DENOMINAZIONE	Quant.	Codice applicab.
									Attaching Parts		
165	PF3 1-2 38	A.							STUD (72794)	4	
	PS3 1-2	A.							SPRING (72794)	4	
	PC3 1-2	A.							CUP (72794)	4	
-25	138720-01-01	A.	.						TIMER, (K46) variable interval (A0267) (35351) (Lockheed spec dwg 613742-3) (Intrch wth 138720-01-02) (see LR11-14404-427-3)	1	
	138720-01-02	A.	.						TIMER, (K46) variable interval (A0267) (35351) (Lockheed spec dwg 613742-3) (Intrch wth 138720-01-01) (see LR11-14404-427-3)	REF	
									Attaching Parts		
-26	AN515-8R14	A.	.						SCREW (88044)	4	
-27	797628-1	A.	.						SHIM, extra timer	2	
-28	MS21042L08	A.	.						NUT (96906)	4	
-29	852045-101	A.	.						PANEL, extra timer	1	
	852033-101	.							HARNESS ASSY, emerg. auto IFF/SIF relay panel to P-38 *(see fig. 160 for reqd)*	REF	
-30	EMRA14SM1A106	.	.						CONNECTOR, (P58) plug (emerg. auto IFF/SIF relay P-308 disc) (81312)	1	

A - Only for FB

Fuselage Electrical and Electronics

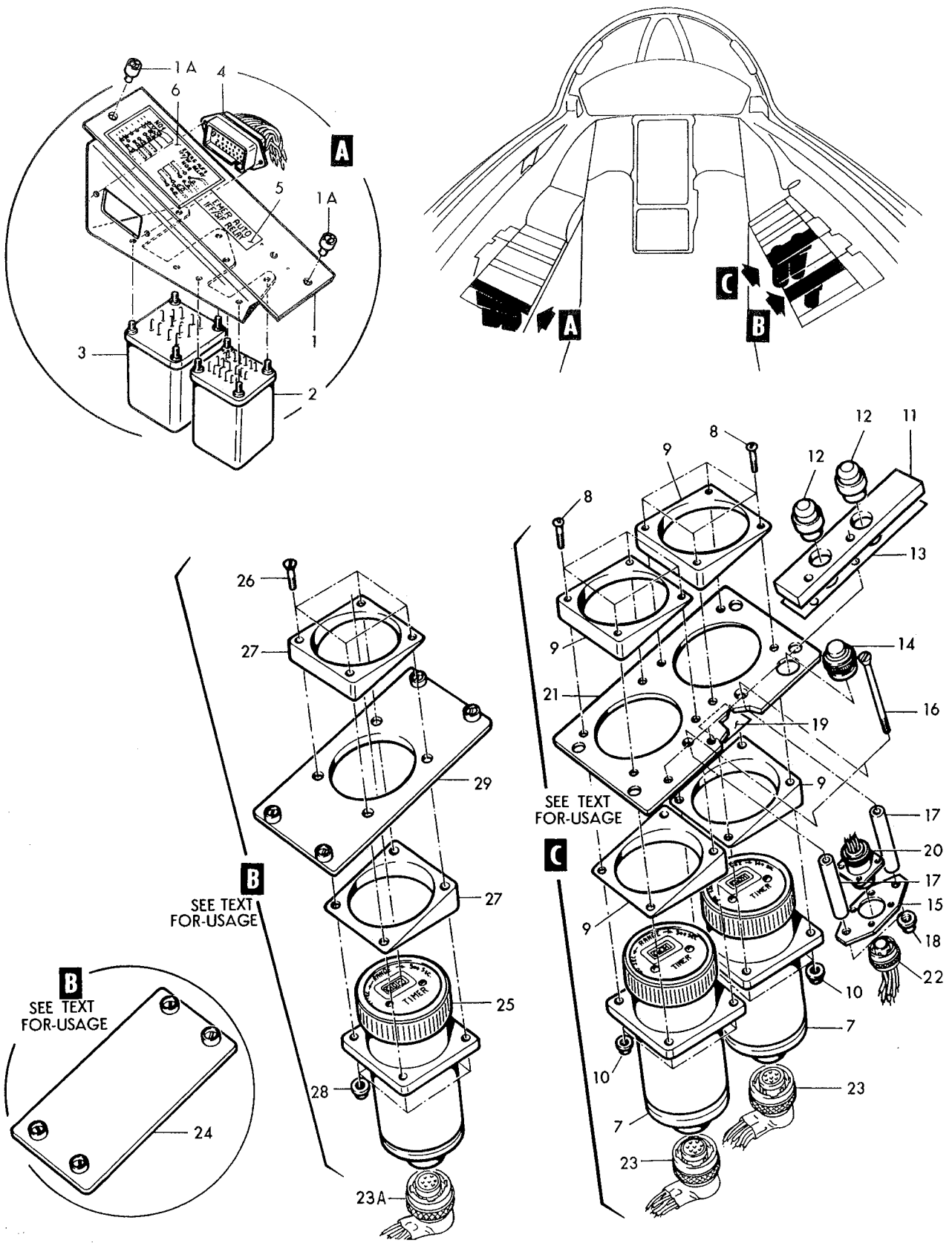

Figure 165–Emerg Auto Iff/Sif Relay Dual and extra Timer Panels

Figura e particolare	NDR	1 2 3 4 5 6 7	DENOMINAZIONE	Quant.	Codice applicab.
			EMERG AUTO IFF/SIF RELAY AND DUAL EXTRA TIMER PANELS		
165	852026-101	.	PANEL ASSY, emerg auto IFF/SIF relay *(see fig. 163 for reqd)*	REF	
	852025-101	. .	BRACKET ASSY, emerg auto IFF/SIF relay	1	
- 1	852026-105	. . .	PANEL, filler	1	
- 1A	PFSC3 1-2 38A	. . .	STUD (72794)	2	
- 2	MS25267D1	. .	RELAY, (K58) (96906)	1	
- 3	MS25269D1	. .	RELAY, (K57) (96906)	1	
	852027-101	. .	HARNESS ASSY, emergency auto IFF/SIF relay	1	
- 4	EMRA14PF2A116	. . .	CONNECTOR, (J20) recp (emergency auto IFF/SIF relay P-308 disc) (81312)	1	
- 5	852020-101	. .	DECAL, emerg auto IFF/SIF relay	1	
- 6	852030-101	. .	CHART, emerg auto IFF/SIF relay wiring	1	
	797146-105	A.	PANEL ASSY, dual timer *(see fig. 163 for reqd)*	REF	
			Attaching Parts		
	PF3 1-2 38	A.	STUD (72794)	4	
	PS3 1-2	A.	SPRING (72794)	4	
	PC3 1-2	A.	CUP (72794)	4	
			——————✲——————		
- 7	138720-01-01	A. .	TIMER, (K46) variable interval (A0267) (35351) (Lockheed spec dwg 613742-3) (intrch wth 138720-01-02) (see LR11-14404-427-3)	2	
	138720-01-02	A. .	TIMER, (K46) variable interval (A0267) (35351) (Lockheed spec dwg 613742-3) (intrch wth 138720-01-01) (see LR11-14404-427-3)	REF	
			Attaching Parts		
- 8	NAS602-14	A. .	SCREW (80205)	4	
- 9	797628-1	A. .	SHIM, dual timer	2	
-10	MS21042L08	A. .	NUT (96906)	4	
			——————✲——————		
	797147-3	A. .	PANEL ASSY, dual timer edge lighted plastic	1	
			Attaching Parts		
	AN515B6R8	A. .	SCREW (88044)	2	
	LS4446-6	A. .	WASHER (36659)	2	
			——————✲——————		
-11	797147-5	A. . .	PANEL ASSY, dual timer edge lighted printed circuit	1	
-12	859-003	A. . . .	LAMP ASSY, edge lighted panel (07199)	2	
	LS9030-327	A. .	LAMP (36659)	2	
-13	797147-101	A. .	SHIM, edge lighter dual timer panel	1	
-14	FPC960V	A. .	LIGHT, (DS63) press-to-test miniature indicator (A1587) (alternate to VM909-3)	1	
	VM909-3	A. .	LIGHT, (DS63) press-to-test miniature indicator (87034) (Lockheed spec dwg 618409-5) (alternate to FPC960V)	REF	
	LS9030-327	A. .	LAMP, incandescent blue (36659)	1	
-15	795584-1	A. .	PLATE, electrical connector mounting	1	
			Attaching Parts		
-16	NAS514P1032-32	A. .	SCREW (80205)	2	
-17	NAS43DD3-106	A. .	SPACER (80205)	2	
-18	MS21042L3	A. .	NUT (96906)	2	
			——————✲——————		
-19	797152-1	A. .	DECAL, dual timer panel	1	
	797151-1	A. .	HARNESS ASSY, dual timer control panel	1	
-20	DM9606-7P004	A. . .	CONNECTOR, (J9) recp (P-24 disc.) (17419)	1	
-21	797147-1	A. .	PANEL ASSY, dual timer mounting	1	
	849705-101	.	HARNESS ASSY, warning light and dimming relay to bhd disc. *(see fig. 160 for reqd)*	REF	6701-6766
	852139-101	.	HARNESS ASSY, warning light and dimming relay to bhd disc *(see fig. 160 for reqd)*	REF	6766-6815
	852282-101	.	HARNESS ASSY, warning light and dimming relay to bhd disc. *(see fig. 160 for reqd)*	REF	6816-
-22	DM9700-7S004	A. .	CONNECTOR, (P43) plug (P-24 disc.) (17139) *(see fig. 160 for reqd)*	REF	
-23	MS3116P12-10S	A. .	CONNECTOR, (P23) plug (run-in and release timers) (96906) *(see fig. 160 for reqd)*	REF	
-23A	MS3116P12-10S	A. .	CONNECTOR, (P23) plug (extra run in timer) (96906) *(see fig. 160 for reqd)*	REF	
-24	LS7885-6	.	PANEL, filler (36659) *(see fig. 163 for reqd)*	REF	
	852044-101	A.	PANEL ASSY, extra timer *(see fig. 163 for reqd)*	REF	

Figura e particolare	NDR	1 2 3 4 5 6 7 DENOMINAZIONE	Quant.	Codice applicab.
	LS9030-313	LAMP, incandescent blue (36659)	1	
164	793382-7	LIGHT INSTL, RH side cockpit *(see fig. 163 for reqd)*	REF	
	793382-5	LIGHT ASSY, RH side cockpit	1	
	794510-1	HARNESS ASSY, RH fwd flood light to T-5 terminal strip	1	
-27	A4135C	LIGHT, (DS82) instrument panel reading (72914) (Lockheed spec dwg 618239-4)	1	
		Attaching Parts		
	AN515-6R5	SCREW (88044)	1	
	AN515-6R4	SCREW (88044)	1	
	AN935-6L	WASHER (88044)	2	
	AN936A6	WASHER (88044)	2	
	P101-473-495	STUD, latch (78553)	2	
		*		
	LS733-3-156	GROMMET, synthetic rubber (36659)	1	
	LS9030-313	LAMP, incandescent blue (36659)	1	
	793382-9	LIGHT ASSY, RH side cockpit	1	
-28	F113G	LIGHT ASSY, (DS16) cockpit flood (A1587) (intrch wth A495024 and A4950A24)	1	
	A4950A24	LIGHT ASSY, (DS16) cockpit flood (72914) (Lockheed spec dwg 618256) (intrch wth A495024 and F113G)	REF	
	A495024	LIGHT ASSY, (DS16) cockpit flood (72914) (Lockheed spec dwg 618256) (intrch wth A4950A24 and F113G)	REF	
		Attaching Parts		
-29	AN507-632R6	SCREW (88044)	3	
-30	AN507-632R10	SCREW (grd stud) (88044)	1	
-31	AN960D6	WASHER (88044)	3	
-32	AN936D6	WASHER (grd stud) (88044)	1	
-33	AN960D6	WASHER (grd stud) (88044)	2	
-34	AN935-6L	WASHER (grd stud) (88044)	1	
-35	AN340-6	NUT (grd stud) (88044)	1	
-36	MS21042L06	NUT (1 used wth grd stud) (96906)	4	
		*		
		Partial Breakdown Follows		
	1385	LAMP (08108)	1	
	794511-1	HARNESS ASSY, RH aft flood light to T-5 terminal strip	1	
-37	A4135C	LIGHT, (DS82) instrument panel reading (72914) (Lockheed spec dwg 618239-4)	1	
		Attaching Parts		
	AN515-6R6	SCREW (88044)	2	
	MS21042L06	NUT (96906)	2	
		*		
	LS733-3-156	GROMMET, synthetic rubber (36659)	1	
	LS9030-313	LAMP, incandescent blue (36659) (reqd on 793382-3)	1	
-38	786418-7	SUPPORT ASSY, flood light	1	
		Attaching Parts		
	AN520-10R8	SCREW (88044)	1	
	LS884-10	WASHER (36659)	1	
		*		
-39	F1051B	LIGHT ASSY, (DS86) spot or flood cockpit (A1587) (alternate to 15-0007-21)	1	
	15-0007-21	LIGHT ASSY, (DS86) spot or flood cockpit (72914) (Lockheed spec dwg 618336-9) (alternate to F1051B) *(see fig. 177)*	REF	
		Attaching Parts		
	AN520-10R8	SCREW (88044)	2	
		*		
	LS9030-313	LAMP, incandescent blue (36659) *(see fig. 177)*	1	
-40	A37064	BASE, spot or flood cockpit light (A1587) (alternate to A8158-2)	1	
	A8158-2	BASE, spot flood cockpit light (72914) (Lockheed spec dwg 618336-11) (alternate to A37064)	REF	
		Attaching Parts		
	AN520-10R10	SCREW (88044)	2	
		*		
-41	MS35489-4	GROMMET (96906)	1	

Fuselage Electrical and Electronics

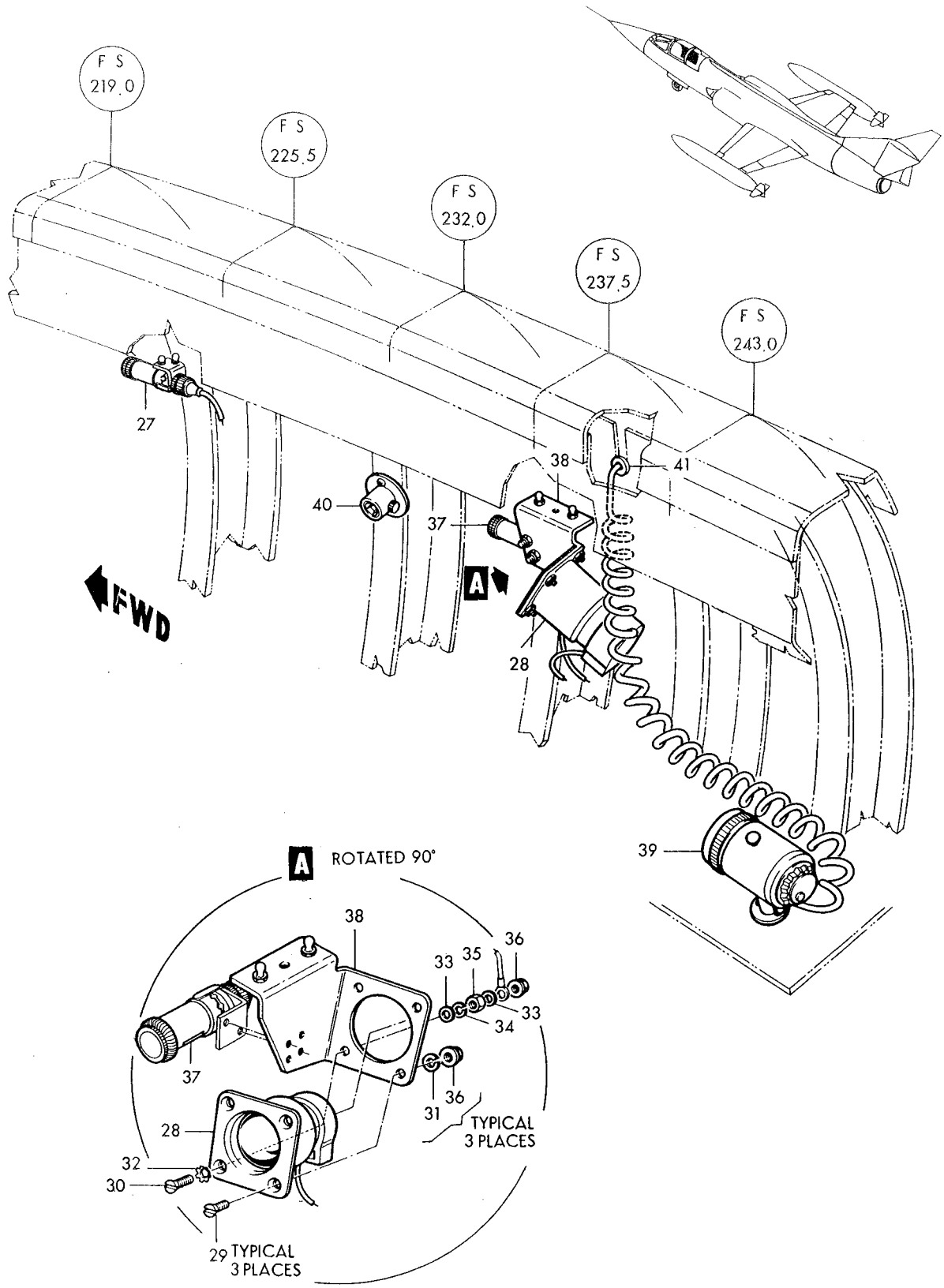

Figure 164–Cockpit Lights (Sheet 2 of 2)

Fuselage Electrical and Electronics

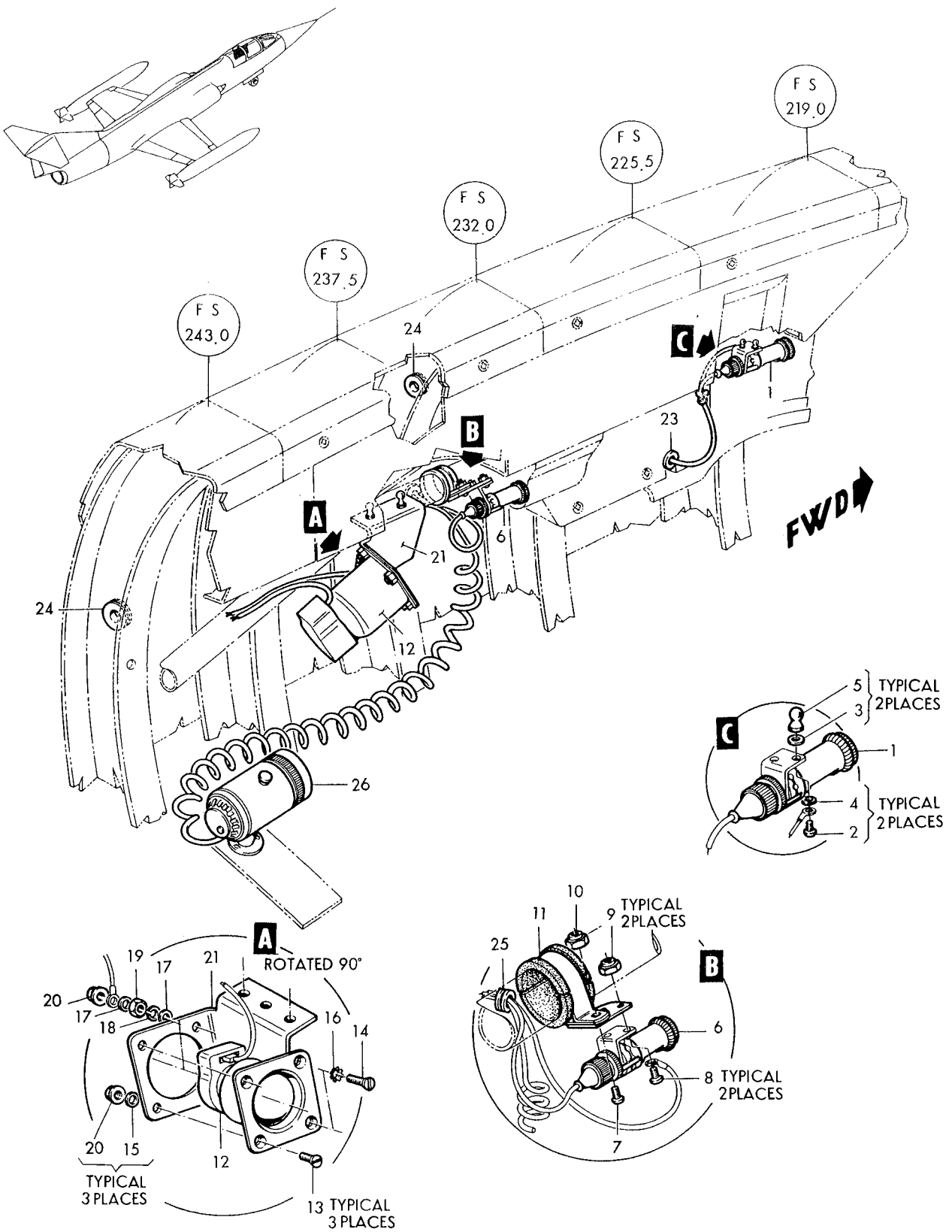

Figure 164–Cockpit Lights (Sheet 1 of 2)

Figura e particolare	NDR	DENOMINAZIONE 1 2 3 4 5 6 7	Quant.	Codice applicab.
		COCKPIT LIGHTS		
164	850684-101	LIGHT INSTL, LH side cockpit *(see fig. 163 for reqd)*	REF	
	850684-103	LIGHT ASSY, LH side cockpit	1	
	794509-1	HARNESS ASSY, TB2 to LH fwd flood light	1	
- 1	A4135C	LIGHT, (DS82) instrument panel reading (72914) (Lockheed spec dwg 618239-4)	1	
		Attaching Parts		
- 2	NAS601-5	SCREW (80205) (1 used wth grd stud)	2	
- 3	AN935-6L	WASHER (1 used wth grd stud) (88044)	2	
- 4	AN936A6	WASHER (1 used wth grd stud) (88044)	2	
- 5	P101-447-495	STUD, latch (1 used wth grd stud) (78553)	2	
		*		
	LS733-3-156	GROMMET, synthetic rubber (36659)	1	
	LS9030-313	LAMP, incandescent blue (36659)	1	
	850684-105	LIGHT ASSY, LH side cockpit	1	
	794508-1	HARNESS ASSY, LH aft flood light to T2 terminal strip	1	
- 6	A4135C	LIGHT, (DS82) instrument panel reading (72914) (Lockheed spec dwg 618239-4)	1	
		Attaching Parts		
- 7	NAS603-4	SCREW (80205)	1	
- 8	NAS601-4	SCREW (80205) (grd stud)	2	
- 9	22K1-62	NUT, self-locking cap (72962) (grd stud)	2	
-10	22K1-02	NUT, self-locking cap (72962)	1	
		*		
	LS733-3-156	GROMMET, synthetic rubber (36659)	1	
	LS9030-313	LAMP, incandescent blue (36659)	1	
-11	799901-101	CLAMP	1	
	850684-107	LIGHT ASSY, LH side cockpit	1	
-12	F113G	LIGHT ASSY, (DS16) cockpit flood (A1587) (intrch wth A495024 and A4950A24)	1	
	A4950A24	LIGHT ASSY, (DS16) cockpit flood (72914) (Lockheed spec dwg 618256) (intrch wth A495024 and F113G)	REF	
	A495024	LIGHT ASSY, (DS16) cockpit flood (72914) (Lockheed spec dwg 618256) (intrch wth A4950A24 and F113G)	REF	
		Attaching Parts		
-13	NAS514P632-6	SCREW (80205)	3	
-14	NAS514P632-10	SCREW (grd stud) (80205)	1	
-15	AN960D6	WASHER (88044)	3	
-16	AN936D6	WASHER (grd stud) (88044)	1	
-17	AN960D6	WASHER (grd stud) (88044)	2	
-18	AN935-6L	WASHER (grd stud) (88044)	1	
-19	AN340C6	NUT (grd stud) (88044)	1	
-20	MS21042L06	NUT (1 used wth grd stud) (96906)	4	
		*		
		Partial Breakdown Follows		
	1385	LAMP (08806)	1	
-21	795472-1	SUPPORT ASSY, thunderstorm light	1	
		Attaching Parts		
	NAS603-8	SCREW (80205)	1	
	LS884-10	WASHER (36659)	1	
		*		
-23	MS35489-4	GROMMET (96906)	1	
-24	295957-12A	GROMMET, nylon (61864)	2	
-25	MS35489-6	GROMMET (96906)	1	
-26	F1051B	LIGHT ASSY, (DS86) spot or flood cockpit (A1587) (alternate do 15-0007-21)	1	
	15-0007-21	LIGHT ASSY, (DS86) spot or flood cockpit (72914) (Lockheed spec dwg 618336-9) (alternate to F1051B)	REF	
		Attaching Parts		
	NAS603-8	SCREW (80205)	2	
		*		

Figura e particolare	NDR	1 2 3 4 5 6 7	DENOMINAZIONE	Quant.	Codice applicab.
163	795918-101	A.	CONVERSION KIT, DCU-9/A monitor *(see fig. 260 for reqd)* (Alternate to 795918-105)	REF	
	795918-105	A.	CONVERSION KIT, control tester *(see fig. 260 for reqd)* (Alternate to 795918-101)	REF	
-52	795918-103	A. .	MONITOR ASSY	1	
	43155-13	A. . .	CONTROL MONITOR, (E128) (in flight tester) (72914) (Lockheed spec dwg 670039-101) (see sep LR whn avail)	1	
	LS9030-327	A. . .	LAMP, incandescent (blue-white) (36659)	2	
	T1517/T1524	A. .	CONTROL TESTER	1	
	849861-101	.	HARNESS ASSY, low pass filter to emergency UHF receiver-transmitter *(see fig. 178 for reqd)*	REF	
-53	UG1186U	. .	CONNECTOR, (J266) Jack (UHF emergency receiver-transmitter) (80058)	REF	
-53A	FL0404-000	.	PANEL ASSY, LH cockpit circuit breaker (A0019) *(see fig. 159 for reqd)*	REF	
-54	792896-101	.	PANEL ASSY, RH cockpit circuit breaker *(see fig. 160 for reqd)*	REF	
	852028-101	.	HARNESS ASSY, emer UHF radio to bhd 255 disc. *(see fig. 156 for reqd)*	REF	6701-6815
	852379-101	.	HARNESS ASSY, emer UHF radio to bhd 255 disc. *(see fig. 156 for reqd)*	REF	6816-
-55	MS35168-88F	. .	CONNECTOR, (P44) plug (emer UHF radio) (96906)	1	
	KS89-11	D. .	ADAPTER (91836)	1	
	849900-101	.	ELECTRICAL INSTL, fwdfus *(see fig. 156 for reqd)*	REF	
-56	850684-101	. .	LIGHT INSTL, LH side cockpit *(see fig. 164)*	1	
-57	793382-7	. .	LIGHT INSTL, RH side cockpit *(see fig. 164)*	1	
-58	5603MC	. .	BOLT, (DS81) light (07204)	1	
	852123-101	C. .	RELAY INSTL, flap asymmetry rel to stand assy cont CKTP RH	1	
	852075-103	C. . .	BRACKET ASSY, aileron and rudder limiter control relay	1	
			Attaching Parts		
-59	NAS602-10	C. . .	SCREW (96906)	2	
-60	AN960D8	C. . .	WASHER (88044)	2	
-60A	MS35333-38	C. . .	WASHER (96906)	2	
-60B	MS35338-42	C. . .	WASHER (96906)	2	
-60C	MS20341-8S	C. . .	NUT (96906)	2	
-61	MS21042L08	C. . .	NUT (96906)	2	
-62	852080-101	C. . . .	BRACKET, aileron and rudder limiter control relay	1	
-63	9302-5964A	C. . . .	RELAY, (K2) miniature 10 Amp DPDT solenoid (A0304) (35344) (Lockheed spec dwg 613683-1) (intchg wth AH23CN460AB)	1	
	AH23CN460AB	C. . . .	RELAY, (K2) miniature 10 Amp DPDT solenoid (72152) (Lockheed spec dwg 613683-1) (intchg wth 9302-5964A)	REF	
			Attaching Parts		
	AN960D4	C. . . .	WASHER (88044)	4	
	MS35338-40	C. . . .	WASHER (96906)	4	
	MS20341-4S	C. . . .	NUT (96906)	4	
-64	852078-101	C. . .	CHART, aileron and rudder limiter control relay	1	
-65	852125-101	C. . .	CHART, T-2000 terminal strip	1	
-66	LS7000A6-8	C. . .	TERMINAL BLOCK ASSY, electrical (36659)	1	
			Attaching Parts		
	NAS601-10	C. . .	SCREW (88044)	2	
	AN960D6	C. . .	WASHER (88044)	2	
	MS21042L06	C. . .	NUT (96906)	2	
-67	LS7008-6-8	C. . .	COVER ASSY, terminal block assy (36659)	1	
-68	LS7009-6	C. . .	DECAL, terminal block identification (36659)	1	
	1N4385	C. . .	DIODE (80131)	2	

A - only for FB
B - Reqd per AA.1F-104S-OT-115
C - Reqd per AA.1F-104-OT-704A and AA.1F-104-OT-693
D - Reqd per AA.1F-104-OT-797
E - Only per partial incorporation of SPU system

Figura e particolare	NDR	1 2 3 4 5 6 7	DENOMINAZIONE	Quant.	Codice applicab.
			Attaching Parts		
163	NAS602-8		SCREW (80205)	4	
-30	8482669-505		RECEIVER-TRANSMITTER, (RETR14) emergency UHF radio (A0062) (49671) (Lockheed spec dwg 670053-119) (see LR 12-14404-425-4)	1	
-30A	59574-506-1		CONTROL, (E94) radar set (A0084) (94756) (Lockheed spec dwg 670937-103) (see AA11-59374-506-4) *(see fig. 157 for reqd)*	REF	6701-6815
-31	59574-506-511		CONTROL, (E2002) radar set (A0084) (Aeritalia spec dwg FL6008-103) (see sep. publ. whn avail.) *(see fig. 157 for reqd)*	REF	6816-
			Partial Breakdown Follows		
	MS25237-327		LAMP (96906)	4	
	851204-101	A.	CONVERSION KIT, dual, bomb timers *(see fig. 260 for reqd)*	REF	
-31A	797146-107	A.	PANEL ASSY, dual timers *(see fig. 165)*	1	
-31B	852044-101	A.	PANEL ASSY, extra timer *(see fig. 165)*	1	
-32	2894-10CB10		REGULATOR, (E87) oxygen (99251) (Lockheed spec dwg 654159-11) (see T.O. 15X6-3-6-4) *(see fig. 136 for reqd)*	REF	
	849731-101		HARNESS ASSY, cockpit nasarr *(see fig. 159 for reqd)*	REF	6701-6815
	852278-101		HARNESS ASSY, cockpit nasarr *(see fig. 159 for reqd)*	REF	6816-
-33	EMRA66SM1A106		CONNECTOR, (P39) plug (radar set control) (81312)	1	
-33A	PT06P12-8S		CONNECTOR, (P195) plug (radar set control) (02987)	1	6816-
	849725-101		HARNESS ASSY, autopilot functional selector panel to P-33 recp *(see fig. 159 for reqd)*	REF	
-34	MS3116P20-41S		CONNECTOR, (P31) plug (autopilot functional selector panel) (77820)	1	
	849737-101		HARNESS ASSY, ARC552 control panel *(see fig. 159 for reqd)*	REF	
-35	MS3116P18-32P		CONNECTOR, (P21) plug (ARC552 control panel) (96906)	1	
-36	MS3116P18-32S		CONNECTOR, (P208) plug (ARC552 control panel) (96906)	1	
-37	DAM15S		CONNECTOR, (P359) plug (emergency UHF radio) (71468)	1	
	849734-101		HARNESS ASSY, LH cockpit P-113, P-117, P-118 and P-119 disc. to bhd 255 *(see fig. 159 for reqd)*	REF	6701-6740
	852091-101		HARNESS ASSY, LH cockpit P-113, P-117, P-118 and P-119 disc to bhd 255 *(see fig. 159 for reqd)*	REF	6741-
-38	WC1658-430		SWITCH, (S80) push button (arrestor hook release) (05402) (Lockheed spec dwg 612703-13)	1	
-39	796775-101		GUARD, arresting hook switch (99707)	1	
-40	MS25041-4		LIGHT, (DS103) arresting hook ind. (96906)	1	
	LS9030-327		LAMP (36659)	1	
-41	849061-101		DECAL, hook down (NHA 849063-103)	1	
-42	849062-103		BRACKET, arrestor hook switch and indicator (NHA 849063-103)	1	
			Attaching Parts		
	AN520-10R10		SCREW (88044)	2	
	849686-101		HARNESS ASSY, align. control inertial navigator to P-38 recp *(see fig. 160 for reqd)*	REF	
-43	EMRA20SM1B106		CONNECTOR, (P52) plug (inertial navigator align. control) (81312) *(see fig. 160 for reqd)*	REF	
	849688-101		HARNESS ASSY, RH cockpit apx coder and radar set control *(see fig. 160 for reqd)*	REF	
-44	MS25183-20-27S		CONNECTOR, (P70) plug (apx coder and radar set control panel) (96906) *(see fig. 160 for reqd)*	REF	
	849704-101		HARNESS ASSY, tacan control to P-38 disc. *(see fig. 160 for reqd)*	REF	
-45	EMRA20SM1106		CONNECTOR, (P76) plug (tacan control panel) (81312) *(see fig. 160 for reqd)*	REF	
	849694-101		HARNESS ASSY, heat and temperature control panel *(see fig. 160 for reqd)*	REF	
-46	EMRA34SM1A106		CONNECTOR (P60) plug (heat and temperature control panel) (81312)	1	
	849700-101		HARNESS ASSY, bhd 255 PHI control to P-40 disc. *(see fig. 160 for reqd)*	REF	
-48	EMRA42SM1106		CONNECTOR, (P34) plug (PHI control panel) (81312) *(see fig. 160 for reqd)*	REF	
-49	EMRA20SM1A106		CONNECTOR, (P75) plug (C2G compass control) (81312) *(see fig. 160 for reqd)*	REF	
	849692-101		HARNESS ASSY, control panel to cockpit floor *(see fig. 160 for reqd)*	REF	
-50	MS25183-28-11S		CONNECTOR, (P56) plug (T249 control panel) (96906) *(see fig. 160 for reqd)*	REF	
	849738-101		HARNESS ASSY, LH cockpit *(see fig. 159 for reqd)*	REF	6701-6740
	849876-101		HARNESS ASSY, LH cockpit *(see fig. 159 for reqd)*	REF	6741-6815
	852275-101		HARNESS ASSY, LH cockpit *(see fig. 159 for reqd)*	REF	6816-
-51	EMRA34SF2A116		CONNECTOR, (J22) recp (P-127 disc.) (81312) *(see fig. 159 for reqd)*	REF	

Fuselage Electrical and Electronics

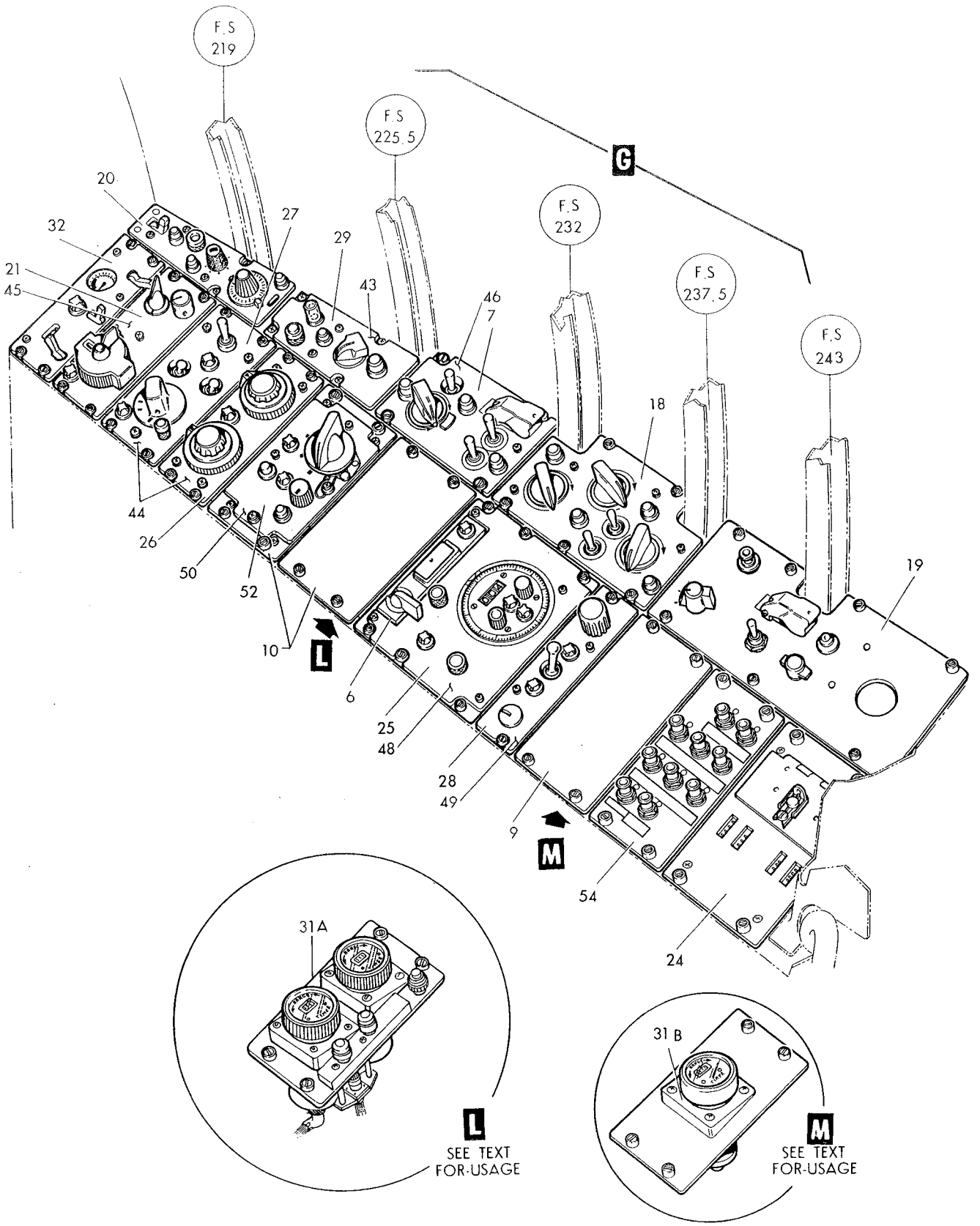

Figure 163-Cockpit Electrical and Electronics (Sheet 2 of 2)

Fuselage Electrical and Electronics

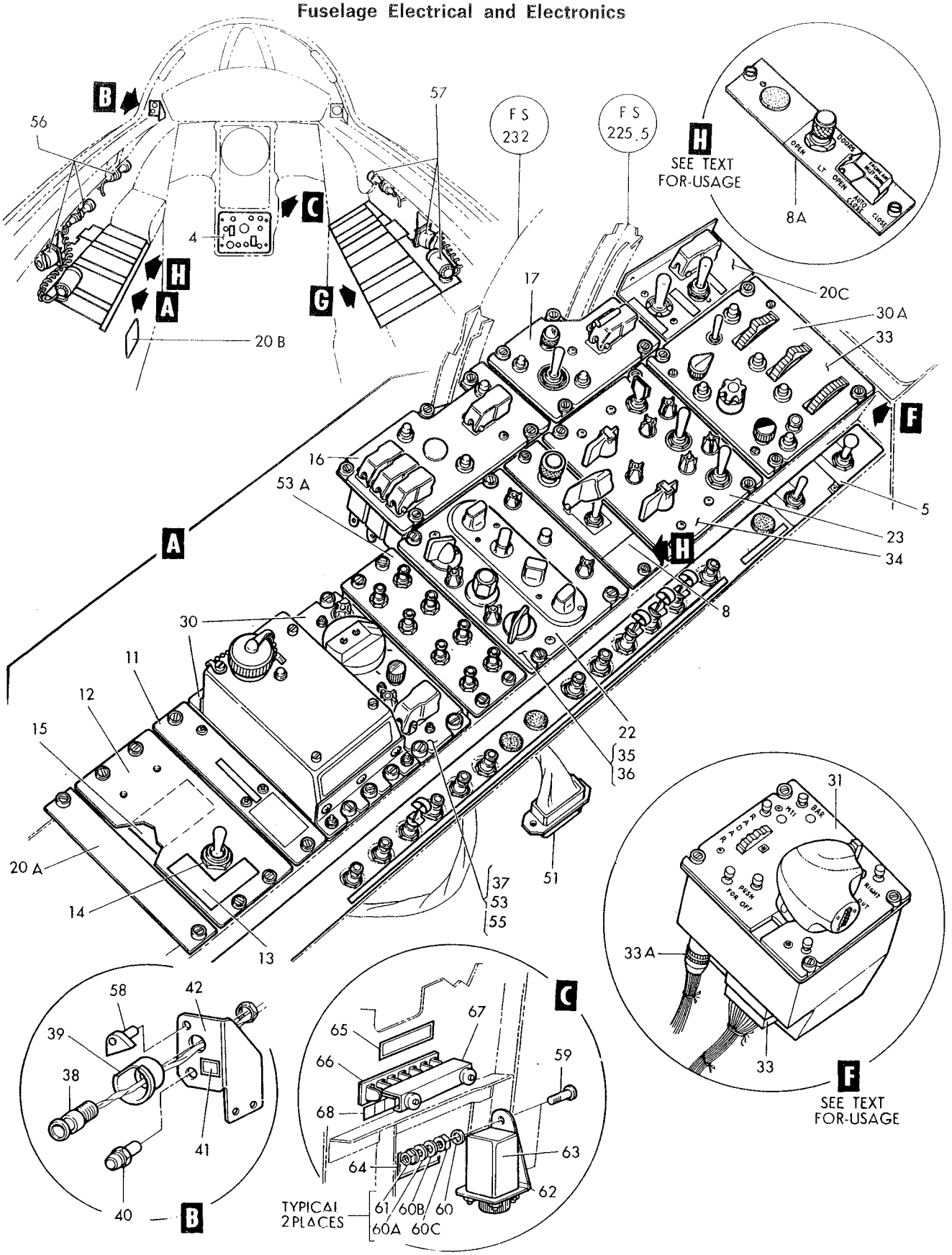

Figure 163-Cockpit Electrical and Electronics (Sheet 1 of 2)

Figura e particolare	NDR	1 2 3 4 5 6 7 DENOMINAZIONE	Quant.	Codice applicab.
		COCKPIT ELECTRICAL AND ELECTRONICS		
163- 4	849924-101	. PANEL ASSY, special weapon control *(see fig. 222 for reqd)*	REF	6701-6765
	849924-103	. PANEL ASSY, special weapon control *(see fig. 222 for reqd)*	REF	6766-
	FL0400-000	. PANEL INSTL, LH and RH console (A0019) (NHA 849138-101)	1	6701-6815
	852350-101	. PANEL INSTL, LH and RH console (NHA 849138-101)	1	6816-
- 5	FL0367-000	. . CIRCUIT BREAKER INSTL, LH cockpit shelf (A0019) (NHA FL0242-000) *(see fig. 166)*	1	6701-6815
	852340-101	. . CIRCUIT BREAKER INSTL, LH cockpit shelf *(see fig. 166)*	1	6816-
- 6	SSU12	. . STATION SELECTOR, position homing (A1996) (05257) (Lockheed spec dwg 620697-103) (see LR 5-14404-223-4)	1	
- 7	548162-101	. . PANEL, (E100) cabin temperature control (A0076) (07217) (Lockheed spec dwg 644874-101) (see T.O. 15A8-5-34-3)	1	
		Partial Breakdown Follows		
	LS9030-327	. . . LAMP, incandescent (blue-white) (36659)	3	
- 8	850521-101	. . PANEL ASSY, control engine air inlet doors *(see fig. 167)*	1	6701-6790; 6831-
- 8A	852801-107	E. . PANEL ASSY, engine air inlet doors and SPU exhaust door *(see fig. 167)*	1	6791-6830
- 9	LS7885-6	. . PANEL, filler (36659)	1	
-10	LS7885-7	. . PANEL, filler (36659)	2	
-11	852026-101	. . PANEL ASSY, emerg auto IFF/SIF relay *(see fig. 165)*	1	
-12	785126-101	. . PANEL ASSY, firing override grd test	1	
-13	793567-1	. . . DECAL, firing override grd test	1	
-14	8906K1084	. . . SWITCH, (S38) 3 position toggle (firing override) (15605) (Lockheed spec dwg 740020-5)	1	
-15	851316-101	. . . DECAL, firing override grd test	1	
-16	FL0400-105	. . PANEL ASSY, APC cutout and stability control (A0019) *(see fig. 167)*	1	6701-6815
	852348-101	. . PANEL ASSY, APC cutout and stability control *(see fig. 167)*	1	6816-
-17	850005-101	. . PANEL ASSY, fuel control *(see fig. 170)*	1	
-18	850171-101	. . PANEL ASSY, lighting control *(see fig. 168)*	1	
-19	785004-505	. . PANEL ASSY, RH console switch *(see fig. 177)*	1	
-20	851471-101	. . PANEL ASSY, edge lighted cursor range and face plate control *(see fig. 169)*	1	
-20A	LS7885-1	. . PANEL, filler (36659)	1	
-20B	FL0398-102	. . DECAL, trim strip LH console (A0019)	1	6701-6815
-20C	849726-101	. HARNESS ASSY, cockpit auxiliary trim panel *(see fig. 159 for reqd)*	REF	6701-6815
	852339-101	. HARNESS ASSY, cockpit auxiliary trim panel *(see fig. 159 for reqd)*	REF	6816-
	850055-103	. PANEL INSTL, LH and RH electronic console (NHA 849071-101)	1	6701-6815
	852350-103	. PANEL INSTL, LH and RH electronic console (NHA 849071-101)	1	6816-
-21	1063935G2	. . CONTROL, (E96) tacan receiver-transmitter (A0073) (90348) (Lockheed spec dwg 616218-3) (see T.O. 12R5-4-47-4)	1	
-22	522-2307-015	. . PANEL, (E85) UHF receiver-transmitter control (A0212) (07216) (Lockheed spec dwg 616236-5) (see LR 12-14404-391-4)	1	
-23	CG107A4	. . PANEL, (E91) autopilot functional selector (A1997) (94580) (Lockheed spec dwg 620673-11) (see T.O. 5A13-3-8-4)	1	
-24	631237	. . CONTROL, (E2) inertial navigator alignment (A0000) (06481) (Lockheed spec dwg 620688-101) (see T.O. 5N6-7-2-4)	1	
	851887-101	B. . SPACER ASSY, alignment control	1	6701-6790
	851887-107	. . SPACER ASSY, alignment control	1	6791-
-25	WSR17	. . CONTROL, (E93) PHI navigator (A1996) (05257) (Lockheed spec dwg 620694-103) (see LR 5-14404-224-4)	1	
-26	01X206950	. . CONTROL, (E53) coder group (98738) (Lockheed spec dwg 616226-3) (see T.O. 12P4-4-9-3)	1	
-27	AG1882-3	. . PANEL, (E95) radar set control (45413) (Lockheed spec dwg 616225-3) (see LR12-14404-356-3) (alternate to 108339-1)	1	
	108339-1	. . PANEL, (E95) radar set control (45413) (Lockheed spec dwg 616225-3) (see sep publ whn avail) (alternate to AG1882-3)	REF	
-28	2586047	. . CONTROL, (E98) C2G compass (A0307) (07187) (Lockheed spec dwg 620814-3) (see LR12-14404-374-3)	1	
	850055-105	. PANEL INSTL., LH and RH console (NHA 849070-101)	1	6701-6815
	852350-105	. PANEL INSTL, LH and RH console (NHA 849070-101)	1	6816-
-29	629330	. . CONTROL, (E97) inertial navigator (A0000) (06481) (Lockheed spec dwg 620737-5) (see T.O. 5F6-7-2-4)	1	

Figura e particolare	NDR	1 2 3 4 5 6 7 DENOMINAZIONE	Quant.	Codice applicab.
162-29	EMRA75SF2C116	. . CONNECTOR, (J25) recp (P-114 disc. lower main instrument panel) (81312)	1	
-30	MS3110P16-26S	. . CONNECTOR, (J153) recp (P-174 disc.) (96906)	1	
	849705-101	. HARNESS ASSY, warning light and dimming relay panel to bhd disc. *(see fig. 160 for reqd)*	REF	6701-6765
	852139-101	. HARNESS ASSY, warning light and dimming relay panel to bhd disc. *(see fig. 160 for reqd)*	REF	6766-6815
	852282-101	. HARNESS ASSY, warning light and dimming relay panel to bhd disc. *(see fig. 160 for reqd)*	REF	6816-
-31	165-26-1000	. . CONNECTOR, (P68) plug (external fuel qty indicator) (02660) . . .	1	
	849699-101	. HARNESS ASSY, optical sight head to bhd 255 disc. *(see fig. 160 for reqd)*	REF	6701-6765
	852133-101	. HARNESS ASSY, optical sight head to bhd 255 disc *(see fig. 160 for reqd).*	REF	6766-6815
	852284-101	. HARNESS ASSY, optical sight head to bhd 255 disc. *(see fig. 160 for reqd)*	REF	6816-
-32	PT06P12-8S	. . CONNECTOR, (P195) plug (manual reticle control) (77820)	1	

A - Removed per AA.1F-104-OT-701A
B - Reqd per AA.1F-104-OT-701A

Fuselage Electrical and Electronics

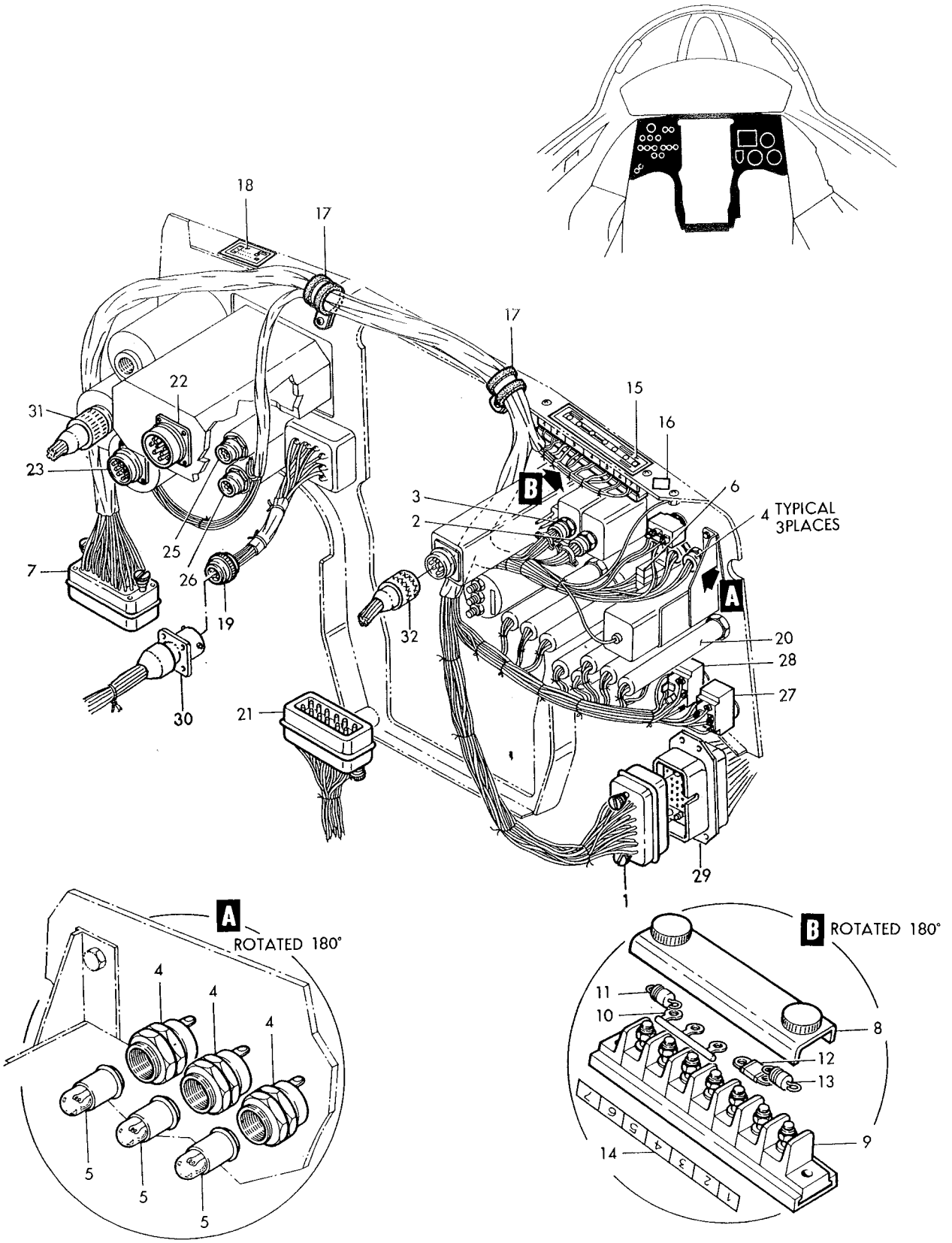

Figure 162–Lower Instrument Panel Electrical

Figura e particolare	NDR	1	2	3	4	5	6	7	DENOMINAZIONE	Quant.	Codice applicab.
									LOWER INSTRUMENT PANEL ELECTPICAL		
162	849905-101			.					ELECTRICAL INSTL, lower instrument panel *(see fig. 222 for reqd)* . . .	REF	
	849684-101			.	.				HARNESS ASSY, lower instrument panel *(see fig. 222)*	1	
- 1	EMRA75PM1C106			.	.	.			CONNECTOR, (P73) plug (P-114 disc. lower instrument panel LH) (81312)	1	
- 2	MC11E10-6SN1			.	.	.			CONNECTOR, (P306) plug (LE flap position indicator) (71468) . .	1	
- 3	MC11E10-6SY1			.	.	.			CONNECTOR, (P307) plug (TE flap position indicator) (71468) . .	1	
- 4	FI610V			.	.	.			LIGHT ASSY, (M9) landing gear down position indicator (A1587) (alternate to VM300M100) *(see fig. 222)*	3	
	VM300M100			.	.	.			LIGHT ASSY, (M9) landing gear down position indicator (87034) (Lockheed spec dwg 619239-1) (alternate to FI610V) *(see fig. 222)* .	REF	
									Partial Breakdown Follows		
- 5	MS25237-327			.	.	.			LAMP (96906)	1	
- 6	22AT2T			.	.	.			SWITCH ASSY, (S34), 8 circuit toggle (91929) (Lockheed spec dwg 613647-3) *(see fig. 222)*	1	
- 7	EMRA50PM1106			.	.	.			CONNECTOR, (P176) plug (P-3 disc. lower instrument panel RH) (81312)	1	
- 8	LS7007-6-7			.	.				COVER ASSY, terminal block (36659)	1	
- 9	LS7000-6-7			.	.				TERMINAL BLOCK ASSY, electrical (36659)	1	
									Attaching Parts		
	NA601-10P			.	.				SCREW (80205)	2	
	MS21042L06			.	.				NUT (96906)	2	
									——————*———————		
-10	4V016-6-14-3			.	.				BUS ASSY, flexible (91812)	1	
-11	M22684-03-0050			.	.				RESISTOR, (R10) 100 Ohm 1 Watt (81349)	1	
-12	M22684-03-0084			.	.				RESISTOR, (R9) 510 Ohm 1 Watt (81349)	1	
-13	M22684-04-0018			.	.				RESISTOR, (R8) 22 Ohm 2 Watt (81349)	1	6701-6765
-14	LS7009-6			.	.				DECAL, terminal block identification (36659)	1	
-15	794809-1		A.	.	.				DECAL, lower instrument panel TB4 (Modified and reidentified to 852082-101 per AA.1F-104-OT-701A)	1	6701-6765
	852082-101		B.	.	.				DECAL, lower instrument panel TB4 (Supersedes 794809-1 per AA.1F-104-OT-701A)	1	6766-
-16	LS4998TB4			.	.				DECAL, terminal block identification (36659)	1	
-17	MS21919WDG9			.	.				CLAMP (96906)	2	
									Attaching Parts		
	NAS1096-3-8			.	.				SCREW (80205)	2	
	MS21042L3			.	.				NUT (96906)	2	
									——————*———————		
-18	798211-1			.	.				DECAL, external fuel quantity indicator selector	1	
-19	MS3116P16-26P			.	.				CONNECTOR, (P190) plug (P-174 disc.) (96906)	1	
-20	SWC10-01			.					SWITCH, (S33) solenoid held push button lighted (A2829) (alternate to R1759G5) *(see fig. 222 for reqd)*	REF	
	R1759G5			.					SWITCH, (S33) solenoid held push button lighted (00712) (Lockheed spec dwg 613695-5) (alternate to SWC10-01) *(see fig. 222 for reqd)*	REF	
	849731-101			.					HARNESS ASSY, cockpit nassar *(see fig. 159 for reqd)*	REF	6701-6815
	852278-101			.					HARNESS ASSY, cockpit nassar *(see fig. 159 for reqd)*	REF	6816-
-21	EMRA42SM1A106			.	.				CONNECTOR, (P61) plug (direct radar indicator) (81312)	1	
-22	DM9700-27S004			.	.				CONNECTOR, (P66) plug (clearance plane and antenna tilt indicator) (17419)	1	
	849729-101			.					HARNESS ASSY, fuel quantity indicator and amplifier to P-32 and P-50 disc. *(see fig. 159 for reqd)*	REF	
-23	165-10-1000			.	.				CONNECTOR, (P67) plug (fuel quantity indicator and amplifier) (02660)	1	
	849695-101			.					HARNESS ASSY, hydraulic pressure indicator to bulkhead disc. *(see fig. 160 for reqd)*	REF	
-25	MC11E10-6SN1			.	.				CONNECTOR, (P63) plug (hydraulic pressure indicator No. 1) (71468) .	1	
-26	MC11E10-6SX1			.	.				CONNECTOR, (P64) plug (hydraulic pressure indicator No. 2) (71468)	1	
-27	MS35059-21			.					SWITCH, (S32) (bomb arming nose and tail) (96906) *(see fig. 222 for reqd)* .	REF	
-28	MS35059-23			.					SWITCH, (S54) (bomb automatic-manual release control) (96906) *(see fig. 222 for reqd)*	REF	
	849738-101			.					HARNESS ASSY, LH cockpit *(see fig. 159)*	REF	6701-6740
	849876-101			.					HARNESS ASSY, LH cockpit *(see fig. 159)*	REF	6741-6815
	852275-101			.					HARNESS ASSY, LH cockpit *(see fig. 159)*	REF	6816-

Figura e particolare	NDR	1	2	3	4	5	6	7	DENOMINAZIONE	Quant.	Codice applicab.
161	MS21042L06		.	.					NUT (96906)	2	
-22	850328-101		.	.					CHART, main instrument panel wiring TB6	1	
-23	726429-3		.	.					STUD, main instrument panel grd	2	
	MS35338-43		.	.					WASHER (grd stud) (96906)	4	
	AN345-10		.	.					NUT (grd stud) (88044)	4	
	AN960D10		.	.					WASHER (grd stud) (88044)	4	
	MS21042L3		.	.					NUT (grd stud) (96906)	4	
	849737-101		.						HARNESS ASSY, ARC552 control panel *(see fig. 159 for reqd)*	REF	
-24	MS3116P16-26S		.	.					CONNECTOR, (P2) plug (channel selector switch ARC552) (96906)	1	
	849700-101		.						HARNESS ASSY, bhd 255 PHI control to P-40 disc. *(see fig. 160 for reqd)*	REF	
-25	MS3110P20-41SX		.	.					CONNECTOR, (J39) recp (PHI indicator) (96906)	1	
-26	MS3110P20-41SY		.	.					CONNECTOR, (J40) recp (PHI indicator) (96906)	1	
	849697-101		.						HARNESS ASSY, MM3 attitude indicator to bhd 255 *(see fig. 160 for reqd)*	REF	
-27	DM9606-37S004		.	.					CONNECTOR, (J12) recp (MM3 attitude indicator) (17419)	1	
	849742-101		.						HARNESS ASSY, cockpit area APC and damper *(see fig. 159 for reqd)*	REF	
-28	VP9-2CE2		.	.					CONNECTOR, (P84) plug (angle of attack pitch rate indicator) (05574)	1	
	849698-101		.						HARNESS ASSY, nozzle position indicator to bhd disc. *(see fig. 160 for reqd)*	REF	
-29	MS25183-14S5S		.	.					CONNECTOR, (P18) plug (nozzle position indicator) (96906)	1	
	849705-101		.						HARNESS ASSY, warning light and dimming relay to bhd disc. *(see fig. 160 for reqd)*	REF	6701-6765
	852139-101		.						HARNESS ASSY, warning light and dimming relay to bhd disc. *(see fig. 160 for reqd)*	REF	6766-6815
	852282-101		.						HARNESS ASSY, warning light and dimming relay to bhd disc. *(see fig. 160 for reqd)*	REF	6816-
-30	DM9700-12S004		.	.					CONNECTOR, (P69) plug (target altitude indicator) (17419)	1	
	849709-101		.						HARNESS ASSY, indicator to fus sta 255 coaxial *(see fig. 160 for reqd)*	REF	6701-6740
-31	1211-416		.	.					CONNECTOR, (P439) plug (oil quantity indicator) (13556) *(see fig. 160 for reqd)*	REF	6701-6740
	852281-101		A.						HARNESS ASSY, radar altimeter RCVR-XMTR to bhd 255 *(see fig. 160 for reqd)*	REF	
-32	MS3116P14-19S		A.	.					CONNECTOR, (P137) plug (Indicator Radar altm) (96906)	1	
	849734-101		.						HARNESS ASSY, LH cockpit P-113, P-117, P-118 and P-119 disc. to bhd 255 *(see fig. 159 for reqd)*	REF	6701-6740
	852091-101		.						HARNESS ASSY, LH cockpit P-113, P-117, P-118 and P-119 disc to bhd 255 *(see fig. 159 for reqd)*	REF	6741-
-33	EMRA42SF2A116		.	.					CONNECTOR, (J19) recp (LH main instrument panel P-2 disc.) (81312)	1	
	849728-101		.						HARNESS ASSY, bhd 255 exhaust temp. ind. to P-80 disc. *(see fig. 159 for reqd)*	REF	
-34	AN5537-3		.	.					CONNECTOR ASSY, (P-48) plug (P-80 disc.) (88044) *(see fig. 178)*	1	

A - Reqd per AA.1F-104-OT-759B

Fuselage Electrical and Electronics

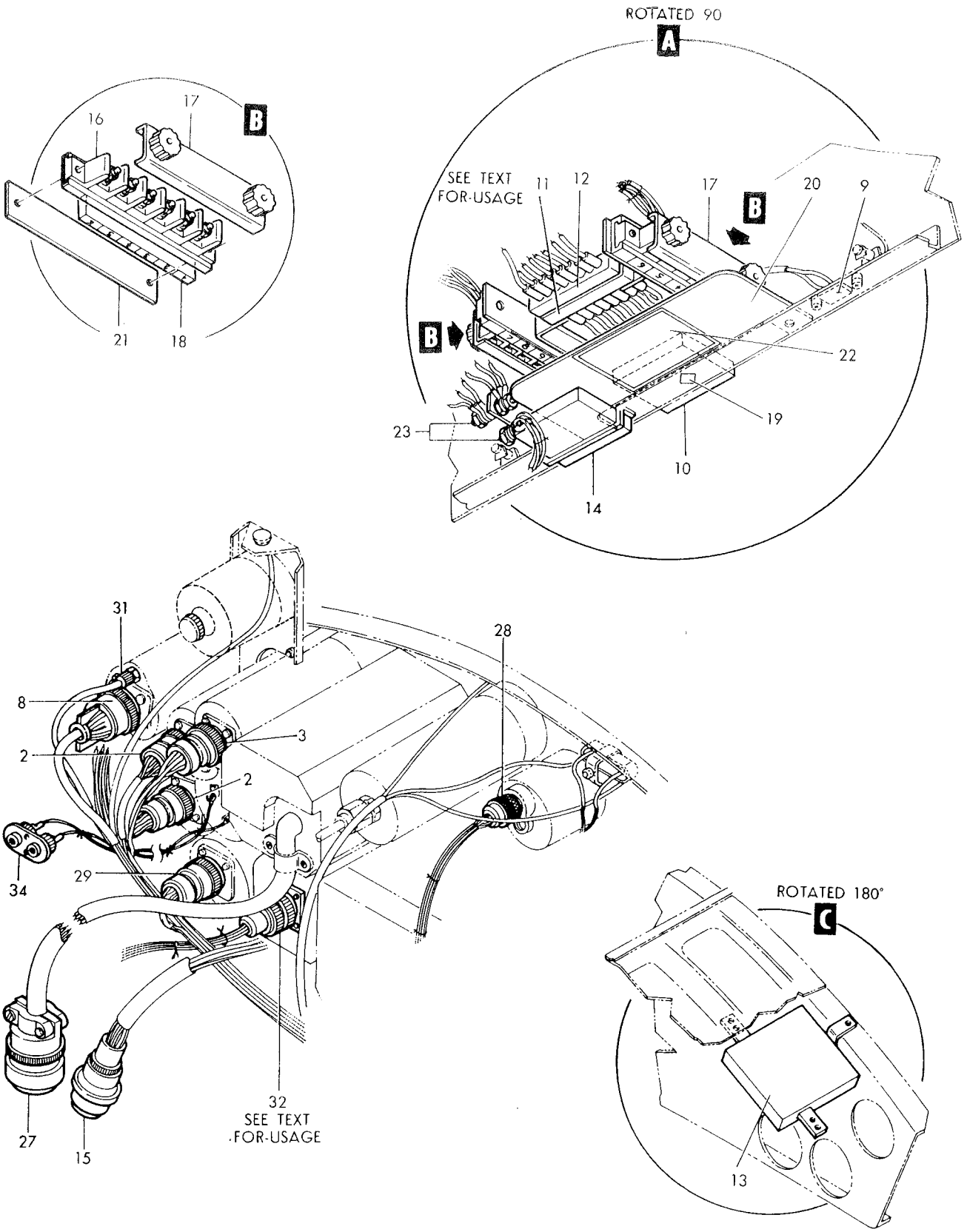

Figure 161-Main Instrument Panel Electrical (Sheet 2 of 2)

Fuselage Electrical and Electronics

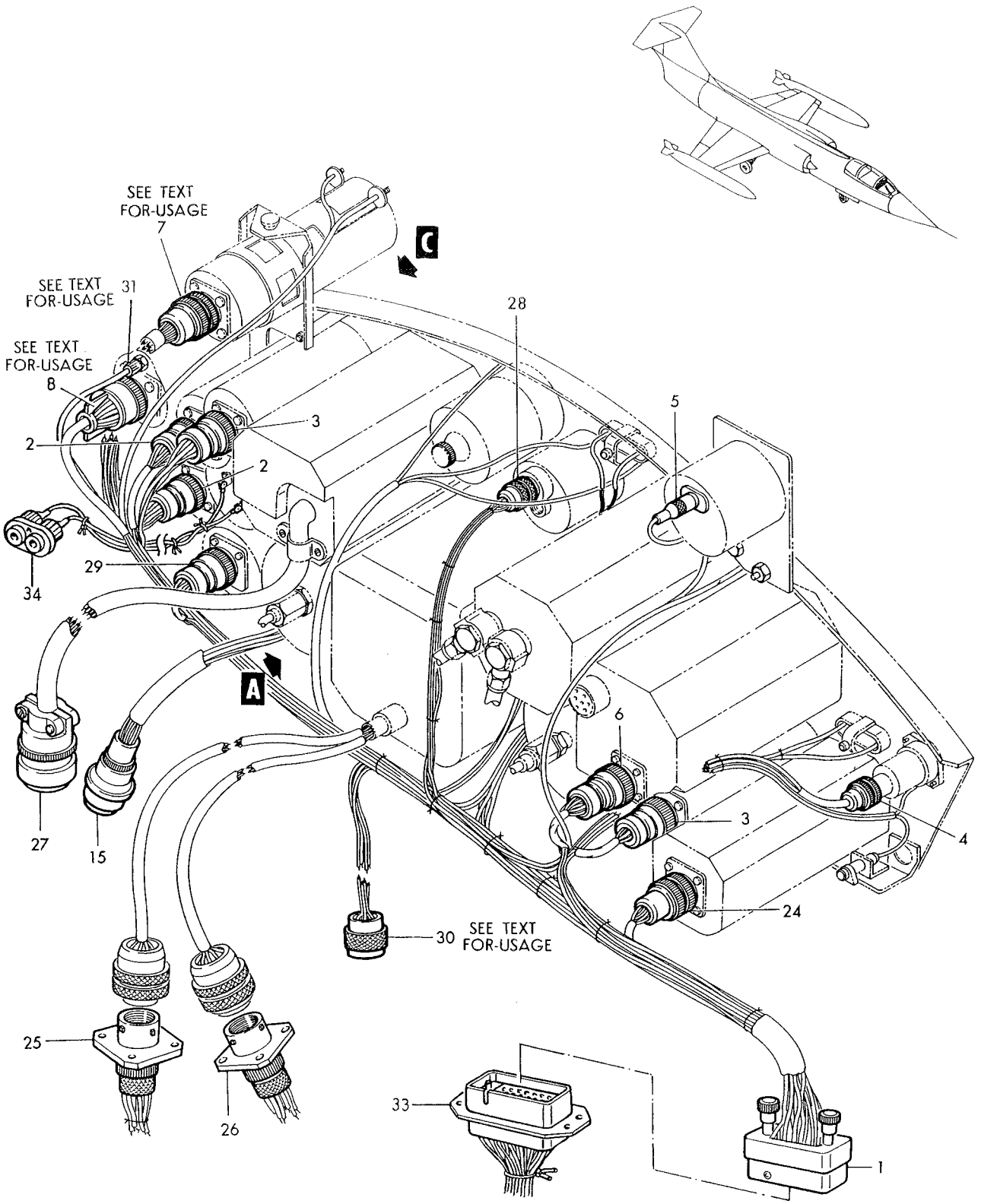

Figure 161–Main Instrument Panel Electrical (Sheet 1 of 2)

Figura e particolare	NDR	1 2 3 4 5 6 7 DENOMINAZIONE	Quant.	Codice applicab.
		MAIN INSTRUMENT PANEL ELECTRICAL		
161	849904-101	. ELECTRICAL INSTL, main instrument panel *(see fig. 220 for reqd)* . . .	REF	
	849678-101	. . HARNESS ASSY, main instrument panel	1	6701-6765
	852090-101	. . HARNESS ASSY, main instrument panel	1	6766-
- 1	EMRA42PM1A106	. . . CONNECTOR, (P57) plug (LH main instrument panel P-2 disc.) (81312)	1	
- 2	MS25183-14S2S	. . . CONNECTOR, (P81) plug (oil pressure and fuel flow indicator) (96906)	2	
- 3	MS25183-10SL3S	. . . CONNECTOR, (P5) (P87) plug (tachometer and turn-slip indicator) (96906)	2	
- 4	MS3116P8-3SW	. . . CONNECTOR, (P82) plug (pitch trim indicator) (96906)	1	
- 5	AN3116-2	. . . PLUG ASSY, (P204) electrical instrument (standby compass) (88044)	1	
- 6	MS25183-10SL3S	. . . CONNECTOR, (P5) plug (emergency attitude indicator) (96906) . .	1	
- 7	MS3116P14-19S	. . . CONNECTOR, (P137) plug (compressor inlet temperature indicator) (96906)	1	
- 8	MS24266R12T12S	. . . CONNECTOR, (P438) plug (oil quantity indicator) (96906) . . .	1	6701-6765
	849681-101	. . HARNESS ASSY, stanby compass resistor	1	
- 9	F112	. . . RESISTOR, (R33) 75 Ohm 10 Watt (44655)	1	
	787584-1	. . HARNESS ASSY, master caution light	1	
-10	MCL10-01	. . . LIGHT ASSY, (DS61) master caution (A2829) (alternate to R3158-1) *(see fig. 220)*	1	
	R3158-1	. . . LIGHT ASSY, (DS61) master caution (00712) (Lockheed spec dwg 618375-9) (alternate to MCL10-01) *(see fig. 220)*	REF	
		Attaching Parts		
	NAS514P632-6	. . . SCREW (80205)	2	
		Partial Breakdown Follows		
	MS25237-327	. . . . LAMP (96906)	3	
	849680-101	. . HARNESS ASSY, P-171 plug main instrument panel light	1	6701-6740
	852102-101	. . HARNESS ASSY, P-171 plug main instrument panel light	1	6741-
-11	SA15P	. . . CONNECTOR, (P165) plug (P-171 instrument panel light) (81312) .	1	
	849677-101	. . HARNESS ASSY, P-171 recp main instrument panel connector . .	1	6701-6740
	852103-101	. . HARNESS ASSY, P-171 recp main instrument panel light	1	6741-
-12	SA15S	. . . CONNECTOR, (J86) recp (P-171 instrument light disc.) (81312) . .	1	
	849679-101	. . HARNESS ASSY, canopy unsafe warning light	1	
-13	LUC10-01	. . . WARNING LIGHT, (DS106) canopy unsafe (A2829) (alternate to R7645)	1	
	R7645	. . . WARNING LIGHT, (DS106) canopy unsafe (00712) (Lockheed spec dwg 670993-101) (alternate to LUC10-01)	REF	
		Attaching Parts		
	NAS601-6	. . SCREW (80205)	3	
	MS35333-37	. . WASHER (96906)	3	
	849682-101	. . HARNESS ASSY, special weapon indicator light to P-136 plug . .	1	
-14	MCL12-04	. . . LIGHT INDICATOR, special weapon (A2829) (alternate to R1479-3)	1	
	R1479-3	. . . LIGHT INDICATOR, special weapon (00712) (Lockheed spec dwg 610119-3) (alternate to MCL12-04)	REF	
-15	DM9700-12P004	. . . CONNECTOR, (P86) plug (P-136 disc.) (17419)	1	
-16	LS7000A6-6	. . TERMINAL BLOCK ASSY, electrical (36659)	2	
		Attaching Parts		
	NAS601-10	. . SCREW (80205)	4	
	MS21042L06	. . NUT (96906)	4	
-17	LS7007-6-6	. . COVER ASSY, terminal block assy (36659)	2	
-18	LS7009-6	. . DECAL, terminal block identification (36659)	1	
-19	LS4998TB6	. . DECAL, terminal block identification (36659)	1	
-20	785843-1	. . COVER ASSY, main instrument panel	1	
		Attaching Parts		
	NAS602-8	. . SCREW (80205)	1	
	NAS514P832-8	. . SCREW (80205)	1	6701-6765
	NAS602-9	. . SCREW (80205)	1	6766-
-21	850342-101	. . SUPPORT, terminal block main instrument panel	2	6701-6815
	850342-103	. . SUPPORT, terminal block main instrument panel	2	6816-
		Attaching Parts		
	NAS514P632-6	. . SCREW (80205)	2	

Figura e particolare	NDR	1 2 3 4 5 6 7 DENOMINAZIONE	Quant.	Codice applicab.
160	MS21042L3	NUT (96906)	2	
-105A	852056-101	CHART WIRING, fuel shutoff light signal relay	1	
-106	852015-101	HARNESS ASSY, tacan RCVR to 184 bhd *(see fig. 159 for reqd)*	REF	
-108	UG1185A/U	CONNECTOR, (P17) plug (80058) (bhd 184 disc.)	1	
	Z158	GRIP (04073)	1	
-109	CA1282-6	RECEPTACLE, dummy (71468) (NHA 849903-101)	1	
-110	CA2182-6	RECEPTACLE, dummy (71468) (NHA 849900-101)	1	
	849505-101	HARNESS ASSY, RH sub panel *(see fig. 224 for reqd)*	REF	6701-6765
	852138-101	HARNESS ASSY, RH sub panel *(see fig. 224 for reqd)*	REF	6766-
-111	DM9700-7P004	CONNECTOR, (P74) plug (P-309 disc.) (17419)	1	

A - Only for FB
B - Removed per AA.1F-104S-OT-147
C - Reqd per AA.1F-104S-OT-147
D - Removed per AA.1F-104S-OT-149
E - Reqd per AA.1F-104S-OT-149
F - Reqd per AA.1F-104-OT-759B
G - Removed per AA.1F-104-OT-732B
H - Reqd per AA.1F-104-OT-732B

Figura e particolare	NDR	1 2 3 4 5 6 7 DENOMINAZIONE	Quant.	Codice applicab.
160-79	849709-101	HARNESS ASSY, oil quantity indicator to fus sta 255 coaxial *(see fig. 161)*	1	6701-6740
-80	1211-416	CONNECTOR, (P439) plug (sta 255 and oil quantity indicator) (13556)	2	6701-6740
-81	1284-452	RECEPTACLE, (J292) (fus sta 255) (13556)	1	6701-6740
-82	849951-101	PANEL INSTL, RH fwd cockpit disc.	1	
	851470-101	SWITCH INSTL, alert align unit	1	
-83	MS24658-23D	SWITCH, (S104) (96906)	1	
-84	AN960D816	WASHER (88044)	1	
-85	851469-101	CHART, alert align switch	1	
-86	851479-101	CHART, range cursor control	1	
-86A	MS90159-30E	ADAPTER, (J148) (bhd184) (96906)	1	
	784620-1	PROBE INSTL, air data computer temperature (NHA 849071-101)	1	
-87	538908	PROBE, (E24) temperature (A0076) (70210) (Lockheed spec dwg 620769-1) (see T.O. 5F13-2-5-2)	1	
		Attaching Parts		
-88	AN507-832R8	SCREW (88044)	6	
-89	790514-1	GASKET, temperature probe	1	
	849984-103	EQUIPMENT INSTL, fuel ind power and attitude indicator amplifier *(see fig. 156 for reqd)*	REF	
-90	135269-01	AMPLIFIER, (AR1) attitude indicator (A1996) (35351) (Lockheed spec dwg 620711-1) (see T.O. 5F4-12-4)	1	
		Attaching Parts		
	NAS603-12	SCREW (80205)	4	
-91	EG204A1	POWER UNIT, (MT3) fuel indicator dual (A0019) (94580) (Lockheed spec dwg 624414-1) (see T.O. 5L14-2-12-4)	1	
		Attaching Parts		
	NAS602-8	SCREW (80205)	1	
	849984-101	BRACKET INSTL, fuel ind power and attitude ind amplifier (NHA 849900-101)	1	
-92	788963-1	DECAL, attitude indicator amplifier	1	
-93	786186-101	DECAL, fuel indicator power unit	1	
-94	851064-101	CHART, fuel qty dual power unit wiring	1	
	852137-101	HARNESS ASSY, P-27 disc. to AC load center *(see fig. 174 for reqd)*	REF	
-95	MS3116P10-6S	CONNECTOR, (P100) plug (temperature probe) (96906)	1	
	788184-1	AMPLIFIER INSTL, fus sta 243 to 249 rounds counter *(see fig. 156 for reqd)*	REF	
-96	788228-9	AMPLIFIER ASSY, (AR5) ammunition rounds counter (see T.O. 11F4-23-2-4)	1	
		Attaching Parts		
	NAS623-3-1	SCREW (80205)	4	6701-6765
	NAS1096-3-6	SCREW (80205)	4	6766-
	850736-101	PANEL INSTL, face plate heater resistor *(see fig. 156 for reqd)*	REF	
	850737-101	PANEL ASSY, face plate heater resistor	1	
		Attaching Parts		
	NAS623-3-2	SCREW (80205)	4	
	AN960D10	WASHER (88044)	4	
	MS21042L3	NUT (96906)	4	
-97	RE75G2R00	RESISTOR, (R51) 2 Ohm 20 Watt (91637)	2	
-98	RE75G1R00	RESISTOR, (R50) 1 Ohm 20 Watt (91637)	1	
-99	RE70G24R9	RESISTOR, (R53) 25 Ohm 15 Watt (91637)	1	
-100	RE70G4R99	RESISTOR, (R59) 5 Ohm 15 Watt (91637)	1	
-101	RE70G10R0	RESISTOR, (R52) 10 Ohm 15 Watt plus or minus 3 PDT (91637)	1	
-102	796851-1	DECAL, resistor face plate heater wiring	1	
	849707-101	HARNESS ASSY, seat rail resistor panel	1	
-103	PT02E12-8P	CONNECTOR, (J197) recp (P-77 disc.) (77820)	1	
-104	794654-1	PANEL, face plate heater resistor	1	
-105	794655-1	BRACKET, face plate heater resistor panel	2	
		Attaching Parts		
	NAS517-3-7	SCREW (80205)	2	
	AN960D10	WASHER (88044)	2	

Figura e particolare	NDR	1	2	3	4	5	6	7	DENOMINAZIONE	Quant.	Codice applicab.
160-56	PT06P12-8S								CONNECTOR, (P195) plug (P-77 disc.) (77820)	1	
-57	DM9606-19S004								CONNECTOR, (J114) recp (P-23 disc.) (17419) *(see fig. 169)*	1	
	849688-101								HARNESS ASSY, RH cockpit apx coder and radar set control *(see fig. 163)*	1	
-58	MS25183-20-27S								CONNECTOR, (P70) plug (apx coder and radar set control panel) (96906) *(see fig. 163)*	2	
	849704-101								HARNESS ASSY, tacan control to P-38 disc. *(see fig. 163)*	1	
-59	EMRA20SM1106								CONNECTOR, (P76) plug (tacan control panel) (81312) *(see fig. 163)*	1	
	849690-101								HARNESS ASSY, cockpit pressure dump valve to P-126 recp disc. *(see fig. 145)*	1	
	849692-101								HARNESS ASSY, control panel to cockpit floor *(see fig. 163)*	1	
-60	MS25183-28-11S								CONNECTOR, (P56) plug (T249 control panel) (96906) *(see fig. 163)*	1	
	849693-101								HARNESS ASSY, data link control	1	
-61	EMRA50SM1106								CONNECTOR, (P62) plug (data link control panel) (81312)	1	
	849700-101								HARNESS ASSY, bhd 255PHI control to P-40 disc. *(see fig. 161 and 163)*	1	
-62	EMRA42SM1106								CONNECTOR, (P34) plug (PHI control panel) (81312) *(see fig. 163)*	1	
-63	EMRA20SM1A106								CONNECTOR, (P75) plug (C2G compass control) (81312) *(see fig. 163)*	1	
	849699-101								HARNESS ASSY, optical sight head to bhd 255 disc. *(see fig. 162, 177 and 227)*	1	6701-6765
	852133-101								HARNESS ASSY, optical sight head to bhd 255 disc. *(see fig. 162, 177 and 227)*	1	6766-6815
	852284-101								HARNESS ASSY, optical sight head to bhd 255 disc. *(see fig. 162, 177 and 227)*	1	6816-
-64	EMRA42SM1106								CONNECTOR, (P34) plug (P-20 disc.) (81312)	1	
-65	DM9700-12S004								CONNECTOR, (P180) plug (ammunition pnd/ampl) (17419)	1	
	849696-101								HARNESS ASSY, liquid oxygen quantity indicator to bhd disc. *(see fig. 224)*	1	
-66	1-670-1								CONNECTOR, (P92) plug (P-130 disc.) (95712)	1	
	849697-101								HARNESS ASSY, MM3 attitude indicator to bhd 255 *(see fig. 161)*	1	
-67	DM9700-19S004								CONNECTOR, (P9) plug (MM3 attitude indicator amplifier) (17419)	1	
	849705-101								HARNESS ASSY, warning lights and dimming relay panel to bhd disc. *(see fig. 161, 162, 165 and 168)*	1	6701-6765
	852139-101								HARNESS ASSY, warning light and dimming relay panel to bhd disc. *(see fig. 161, 162, 165 and 168)*	1	6766-6815
	852282-101								HARNESS ASSY, warning light and dimming relay panel to bhd disc. *(see fig. 161, 162, 165 and 168)*	1	6816-
-68	EMRA66SM1A106								CONNECTOR, (P39) plug (P-91 disc.) (81312)	1	
-69	EMRA66SM1B106								CONNECTOR, (P235) plug (P-92 disc.) (81312)	1	
-70	DM9606-27S004								CONNECTOR, (J28) recp (P-111 disc.) (17419)	1	
-71	DM9606-12S004								CONNECTOR, (J134) recp (P-136 disc.) (17419)	1	
-72	DM9700-7S004								CONNECTOR, (P43) plug (P-24 disc.) (17419) *(see fig. 160)*	1	
-73	MS3116P12-10S	A.							CONNECTOR, (P23) plug (run in timer) (96906) *(see fig. 165)*	1	
-74	MS3116P12-10S	A.							CONNECTOR, (P23) plug (release timer) (96906) *(see fig. 165)*	1	
-75	165-62								CONNECTOR, (P146) plug (left dual power unit) (02660)	1	
-76	165-62W								CONNECTOR, (P147) plug (right dual power unit) (02660)	1	
	MS3116P12-10S	A.							CONNECTOR, (P23) plug (extra run in timer) (96906) *(see fig. 165)*	1	
-77	DM9606-7S004								CONNECTOR, (J26) recp (P-309 disc.) (17419)	1	
	849691-101								HARNESS ASSY, control inertial navigator to bhd disc.	1	
-78	EMRA20SM1A106								CONNECTOR, (P75) plug (inertial navigator control) (81312)	1	
	849695-101								HARNESS ASSY, hydraulic pressure indicator to bhd disc. *(see fig. 162)*	1	
	849702-101								HARNESS ASSY, grd crew interphone to bhd disc. *(see fig. 177)*	1	
	849698-101								HARNESS ASSY, nozzle position indicator to bhd disc. *(see fig. 161, 177 and 227)*	1	
	852033-101								HARNESS ASSY, emerg auto IFF/SIF relay panel to P-38 *(see fig. 165)*	1	6765-6815
	852094-101								HARNESS ASSY, spare wire RH cockpit	1	6816-
	852283-101								HARNESS ASSY, spare wire RH cockpit		
	852281-101								HARNESS ASSY, radar altimeter RCVR-XMTR to bhd 255 *(see fig. 161 and 201)*	1	6816-

Figura e particolare	NDR	1	2	3	4	5	6	7	DENOMINAZIONE	Quant.	Codice applicab.
160	AN936A10								WASHER (grd stud) (88044)	2	
	AN935-10L								WASHER (grd stud) (88044)	2	
	AN345-10								NUT (grd stud) (88044)	2	
	AN960-10								WASHER (grd stud) (88044)	2	
	MS21042L3								NUT (grd stud) (96906)	2	
-29	849933-101								PANEL ASSY, RH sub *(see fig. 224)*	1	6701-6765
	849933-105								PANEL ASSY, RH sub *(see fig. 224)*	1	6766-6815
	849933-107								PANEL ASSY, RH sub *(see fig. 224)*	1	6816-
-30	849936-101	G.							DECAL, LH sub panel	1	6701-6765
	852099-101	H.							DECAL, RH sub panel	1	
-31	787625-1								DECAL, canopy lever unsafe warning switch	1	
-32	851264-101								DECAL, canopy seal and position warning switch	1	
	850371-101								TERMINAL INSTL, RH cockpit	1	
-33	LS4998TB5								DECAL, terminal block identification (36659)	2	
-34	850372-101								DECAL, cockpit TB5	1	6701-6815
	852208-101	F.							DECAL, cockpit TB5	1	
-35	5070-1								CONNECTOR, (J87) recp (P-130 disc. bhd feed thru) (95712)	1	
-36	NAS1096-312								SCREW (grd stud) (80205)	12	
	AN936A10								WASHER (grd stud) (88044)	12	
	MS35337-43								WASHER (grd stud) (96906)	12	
	AN345-10								NUT (grd stud) (88044)	12	
	AN960-10								WASHER (grd stud) (88044)	12	
	MS21042L3								NUT (grd stud) (96906)	12	
	849706-101								HARNESS ASSY, RH cockpit	1	6701-6765
	852093-101								HARNESS ASSY, RH cockpit	1	6766-6815
	852280-101								HARNESS ASSY, RH cockpit	1	6816-
-37	850371-105								ELECTRICAL ASSY, RH cockpit (fus sta 237)	1	
-38	850371-103								ELECTRICAL ASSY, RH cockpit (fus sta 243)	1	
-39	LS7000A6-8								TERMINAL BLOCK ASSY, electrical (36659)	1	
									Attaching Parts		
	NAS601-8								SCREW (80205)	2	
	MS21042L06								NUT (96906)	2	
									*		
-40	LS7007-6-8								COVER ASSY, terminal block assy (36659)	1	
-41	LS7009-6								DECAL, terminal block identification (36659) (reqd on 850371-103)	1	
-42	4V016-6-14-2								BUS (91812)	1	
-43	4V016-6-14-4								BUS (91812) (reqd on 850371-105)	1	
	792896-101								PANEL ASSY, RH cockpit circuit breaker *(see fig. 163 and 171)*	1	
-44	EMRA75PM1A106								CONNECTOR, (P49) plug (P-27 disc.) (81312)	1	
-45	EMRA104PF2A116G								CONNECTOR, (J7) recp (P-38 disc.) (81312)	1	
-46	EMRA66SF2A116G								CONNECTOR, (J2) recp (P-39 disc.) (81312)	1	
-47	EMRA104SF2A116G								CONNECTOR, (J8) recp (P-40 disc.) (81312)	1	
-48	EMRA104PF2B116G								CONNECTOR, (J13) recp (P-65 disc.) (81312)	1	
-49	EMRA75PF2A106								CONNECTOR, (J297) recp (P-50 disc.) (81312)	1	
-50	EMRA50SF2116								CONNECTOR, (J89) recp (P-3 disc.) (81312)	1	
-51	EMRA50SF2116								CONNECTOR, (J89) recp (P-126 disc.) (81312)	1	
-52	EMRA66PF2A116G								CONNECTOR, (J11) recp (P-37 disc.) (81312)	1	
-54	EMRA34PM1A106								CONNECTOR, (P65) plug (P-138 disc.) (81312)	1	
	849687-101								HARNESS ASSY, annunciator panel and speed brake sensing sw to bhd disc. *(see fig. 134)*	1	6701-6765
	852092-101								HARNESS ASSY, annunciator panel and speed brake sensing sw to bhd disc. *(see fig. 134)*	1	6766-
-54A	DM9606-37-2S								CONNECTOR, (J301) recp (annunciator panel) (17412)	1	
	849686-101								HARNESS ASSY, align. control inertial navigator to P-38 recp *(see fig. 163)*	1	
-55	EMRA20SM1B106								CONNECTOR, (P52) plug (inertial navigator align. control) (81312) *(see fig. 163)*	1	
	849694-101								HARNESS ASSY, heat and temperature control panel to bhd disc. *(see fig. 136, 163, 169 and 214)*	1	

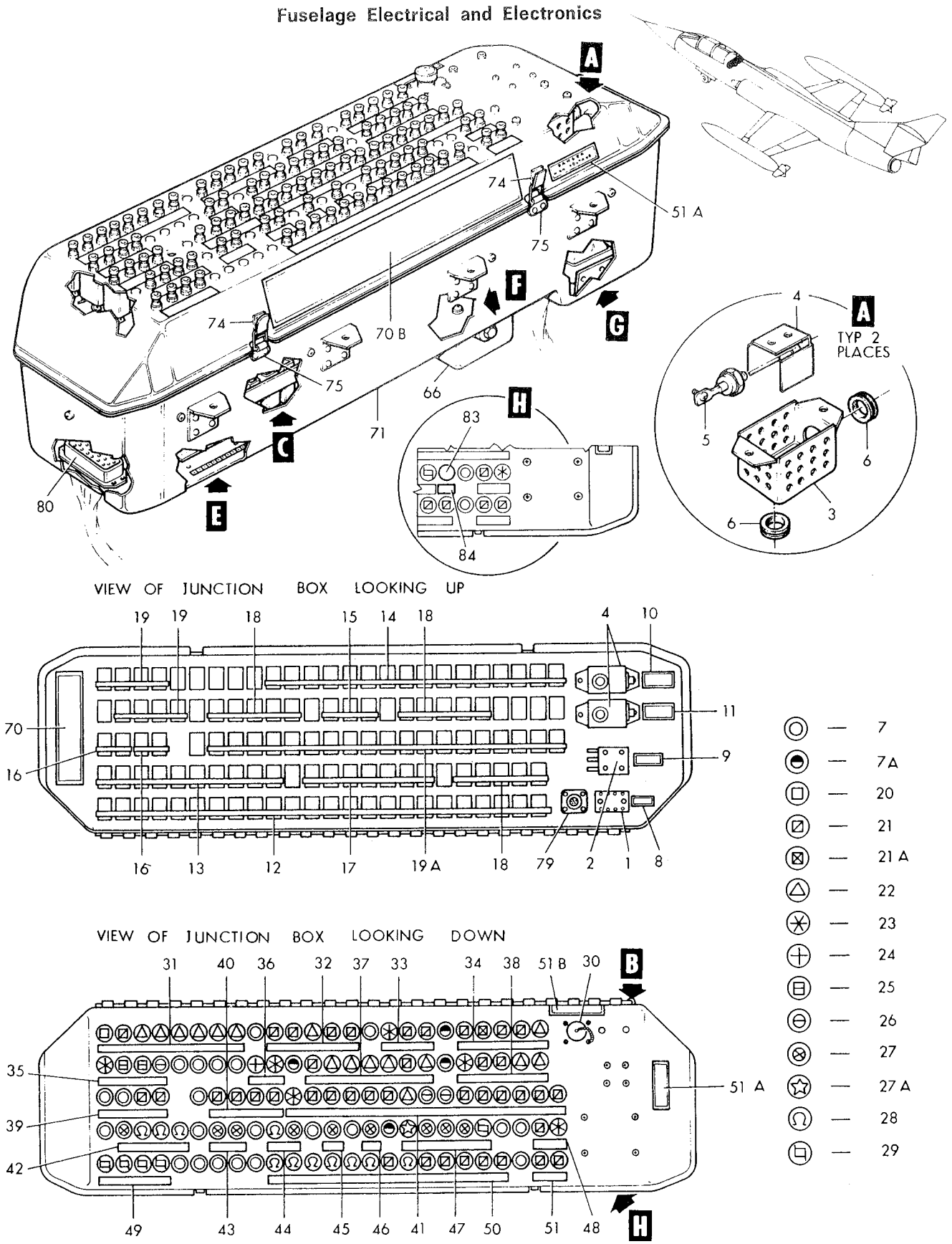

Figure 182-Electronic Compartment Junction Box (Sheet 1 of 3)

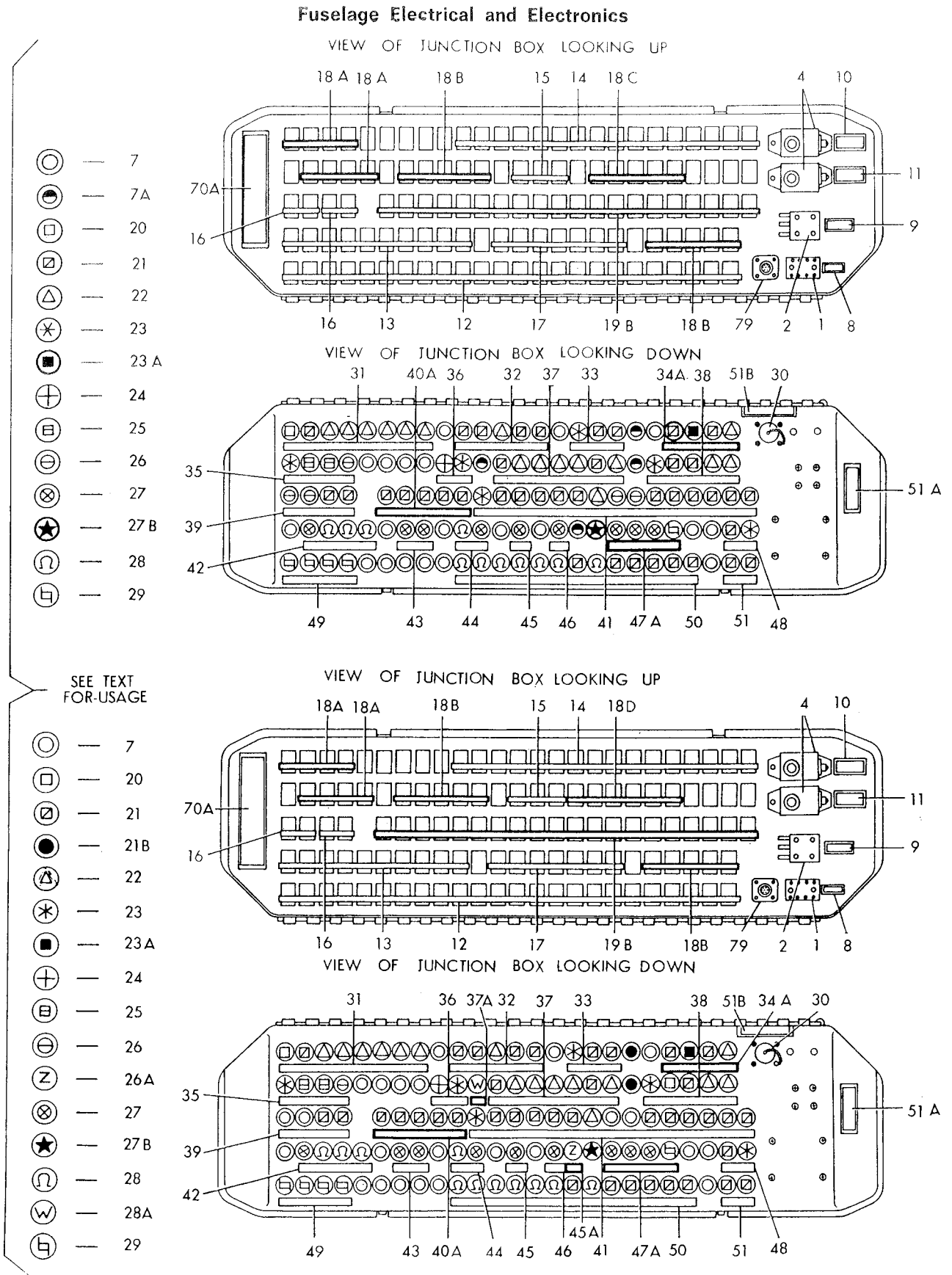

Figure 182-Electronic Compartment Junction Box (Sheet 2 of 3)

Fuselage Electrical and Electronics

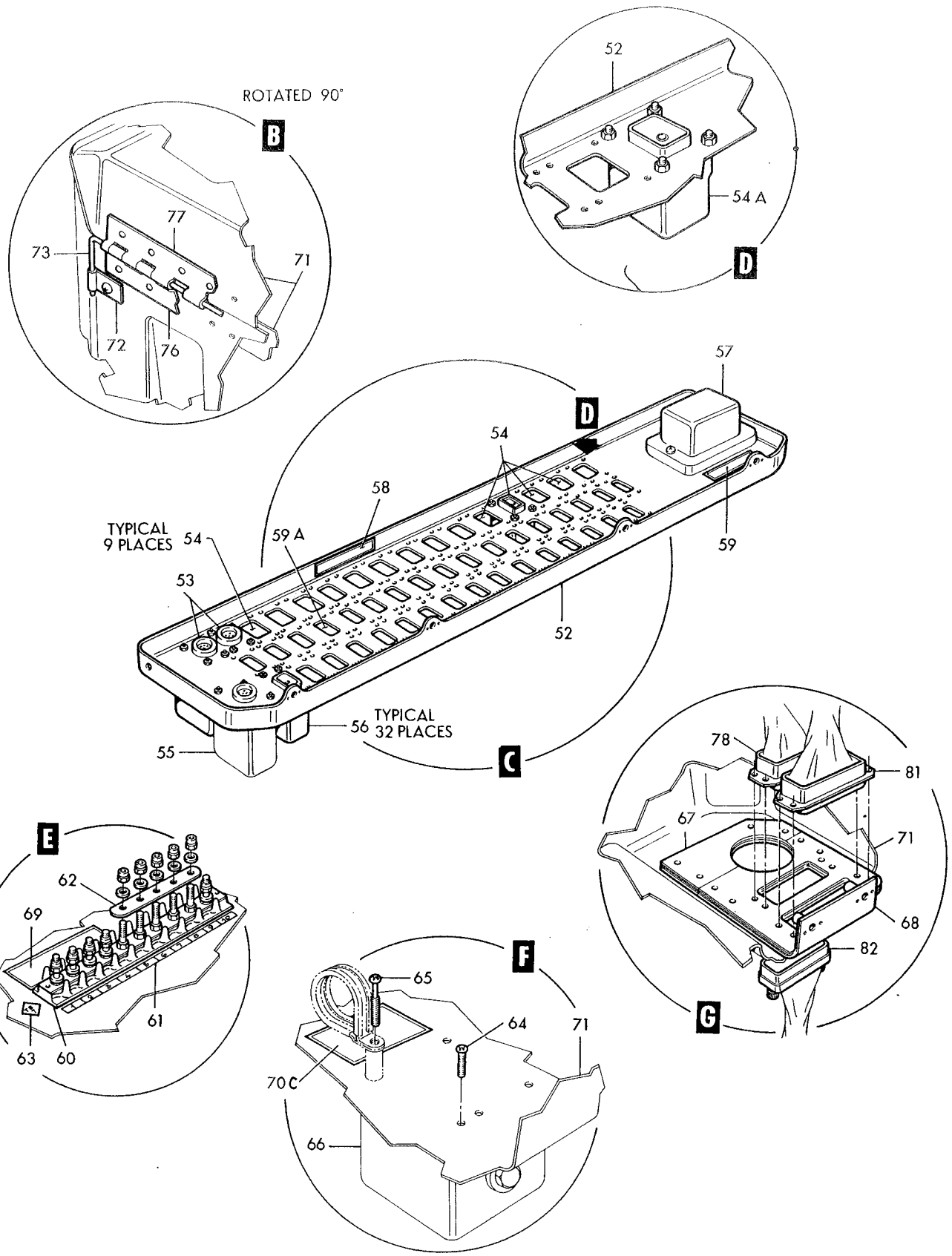

Figure 182–Electronic Compartment Junction Box (Sheet 3 of 3)

Figura e particolare	NDR	1 2 3 4 5 6 7 DENOMINAZIONE	Quant.	Codice applicab.
182-21A	MP701	CIRCUIT BREAKER, (CB1) 5 Amp SPST miniature (A3051) (76374) (Lockheed spec dwg 613540-1) (intchg wth 107-205-104)	1	6701-6765
	107-205-104	CIRCUIT BREAKER, (CB1) 5 Amp SPST miniature (79405) (Lockheed spec dwg 613540-1) (intchg wth MP701)	REF	
-21B	SS48152	PLUG, button (61864)	2	6791-
-22	MP703	CIRCUIT BREAKER, (CB4) 10 Amp SPST miniature (A3051) (76374) (Lockheed spec dwg 613540-5) (intchg wth 107-210-104)	16	
	107-210-104	CIRCUIT BREAKER, (CB4) 10 Amp SPST miniature (79405) (Lockheed spec dwg 613540-5) (intchg wth MP703)	REF	
-23	MP702	CIRCUIT BREAKER, (CB2) 7.5 Amp SPST miniature (A3051) (76374) (Lockheed spec dwg 613540-3) (intchg wth 107-507-104)	6	
-23A	MP702	CIRCUIT BREAKER, (CB2) 7.5 Amp SPST miniature (A3051) (76374) (Lockheed spec dwg 613540-3) (intch wth 107-507-104)	1	6766-
	107-507-104	CIRCUIT BREAKER, (CB2) 7.5 Amp SPST miniature (79405) (Lockheed spec dwg 613540-3) (intchg wth MP702)	REF	
-24	MP707	CIRCUIT BREAKER, (CB9) 35 Amp SPST miniature (A3051) (76374) (Lockheed spec dwg 613540-13) (intchg 107-235-104)	1	
	107-235-104	CIRCUIT BREAKER, (CB9) 35 Amp SPST miniature (79405) (Lockheed spec dwg 613540-13) (intchg wth MP707)	REF	
-25	MP706	CIRCUIT BREAKER, (CB8) 25 Amp SPST miniature (A3051) (76374) (Lockheed spec dwg 613540-11) (intchg wth 107-225-104)	2	
	107-225-104	CIRCUIT BREAKER, (CB8) 25 Amp SPST miniature (79405) (Lockheed spec dwg 613540-11) (intchg wth MP706)	REF	
-26	MP704	CIRCUIT BREAKER, (CB3) 15 Amp SPST miniature (A3051) (76374) (Lockheed spec dwg 613540-7) (intchg wth 107-215-104)	5	
	107-215-104	CIRCUIT BREAKER, (CB3) 15 Amp SPST miniature (79405) (Lockheed spec dwg 613540-7) (intchg wth MP704)	REF	
-26A	LS7501-1	G. CIRCUIT BREAKER, (CB5) 1 Amp push pull (36659)	1	
-27	LS7501-1	CIRCUIT BREAKER, (CB5) 1 Amp push pull (36659)	9	
-27A	LS7501-1	CIRCUIT BREAKER, (CB5) 1 Amp push pull (36659)	1	6701-6765
-27B	SS48152	PLUG, button (61864)	1	6766-
-28	LS7501-2	CIRCUIT BREAKER, (CB7) 2 Amp push pull (36659)	11	
-28A	LS7501-2	G. CIRCUIT BREAKER, (CB7) 2 Amp push pull (36659)	1	
-29	LS7501-1-2	CIRCUIT BREAKER, (CB6) 5 Amp push pull (36659)	5	
-30	MS25043-18C	CAP (electrical receptacle dust) (96906)	1	
-31	850033-101	DECAL, electronic compartment junction box (7 position)	1	
-32	850034-101	DECAL, electronic compartment junction box (4 position)	1	
-33	850190-101	DECAL, electronic compartment junction box	1	
-34	850035-101	A. DECAL, electronic compartment junction box (4 position)	1	6701-6765
-34A	852108-101	B. DECAL, electronic compartment junction box (4 position)	1	
-35	850036-101	DECAL, electronic compartment junction box (No. 1 and No. 2 and No. 3 spl stores)	1	
-36	850037-101	DECAL, electronic compartment junction box (duct anti-ice test and gun control)	1	
-37	850038-101	DECAL, electronic compartment junction box (6 position)	1	
-37A	852209-101	G. DECAL, electronic compartment junction box (radar altm DC)	1	
-38	850039-101	DECAL, electronic compartment junction box (4 position)	1	
-39	850040-101	DECAL, electronic compartment junction box (No. 1 and No. 2 battery, LE and TE flaps)	1	
-40	850041-101	A. DECAL, electronic compartment junction box (No. 1 and No. 2 APC)	1	6701-6765
-40A	852107-101	B. DECAL, electronic compartment junction box (5 position)	1	
-41	850042-101	DECAL, electronic compartment junction box (14 position)	1	
-42	850043-101	DECAL, electronic compartment junction box (3 position)	1	
-43	850044-101	DECAL, electronic compartment junction box (int ext tank fuel)	1	
-44	850045-101	DECAL, electronic compartment junction box (stability control and M2 bomb compt)	1	
-45	850046-101	DECAL, electronic compartment junction box (Tacan)	1	
-45A	852210-101	G. DECAL, electronic compartment junction box (radar altm)	1	
-46	850047-101	DECAL, electronic compartment junction box (IR sight)	1	
-47	850048-101	DECAL, electronic compartment junction box (4 position)	1	6701-6765

Figura e particolare	NDR	1	2	3	4	5	6	7	DENOMINAZIONE	Quant.	Codice applicab.
182-47A	852105-101								DECAL, electronic compartment junction box (4 position)	1	6766-
-48	850049-101								DECAL, electronic compartment junction box (inertial navigation and eng start No. 2)	1	
-49	850050-101								DECAL, electronic compartment junction box (3 position)	1	
-50	850051-101								DECAL, electronic compartment junction box (12 position)	1	
-51	850052-101								DECAL, electronic compartment junction box (navigation lights and gun fire pwr)	1	
-51A	764534								DECAL, high voltage warning	2	
-51B	761061-28								DECAL, electronic compartment junction box (electronic test equipment power)	1	
	850030-101	E.							EQUIPMENT ASSY, electronic compartment junction box panel (Modified and reidentified to 850030-103 per AA.1F-104S-OT-152)	1	6701-6765
	850030-103	F.							EQUIPMENT ASSY, electronic compartment junction box panel (Supersedes 850030-101 per AA.1F-104S-OT-152)	1	6766-6815; 6831-
	850030-105								EQUIPMENT ASSY, electronic compartment junction box panel	1	6816-6830
									Attaching Parts		
	AN520-10R10								SCREW (88044)	6	
	AN960D10								WASHER (88044)	6	
									*		
-52	850029-101								PANEL ASSY, electronic compartment junction box	1	
-53	TD407-45S								TIMER, (K3) 45 second delay pull in (A3051) (35344) (Lockheed spec dwg 619339-1) (intchg wth T329)	2	6701-6790; 6831-
	T329								TIMER, (K3) 45 second delay pull in (98927) (Lockheed spec dwg 619339-1) (intchg wth TD407-45S)	REF	6701-6790; 6831-
	30-11-60023								TIMER, (K63) 60 second delay pull-in (98927) (Lockheed spec dwg 619339-101)	2	6791-6830
									Attaching Parts		
	AN960D6								WASHER (88044)	4	
	MS35338-41								WASHER (96906)	4	
	MS20341-6S								NUT (96906)	4	
									*		
-54	9309-5965A								RELAY, (K1) 4PDT 10 Amp miniature (A0304) (35344) (Lockheed spec dwg 613684-1) (intchg wth AH43CR460AB)	13	
-54A	9309-5965A	F.							RELAY, (K1) 4PDT 10 Amp miniature (A0304) (35344) (Lockheed spec dwg 613684-1) (intchg wth AH43CR460AB)	1	
	AH43CR460AB								RELAY, (K1) 4PDT 10 Amp miniature (72152) (Lockheed spec dwg 613684-1) (intchg wth 9309-5965A)	REF	
									Attaching Parts		
	AN960D4								WASHER (88044)	4	
	MS35338-40								WASHER (96906)	4	
	AN960D4	F.							WASHER (88044)	4	
	MS20341-4S								NUT (96906)	4	
	MS21042L04	F.							NUT (96906)	4	
									*		
-55	TD402-12-5S								TIMER, (K6) 12.5 second delay drop out (A3051) (96261) (Lockheed spec dwg 619340-1) intchg wth T716-125-7)	REF	
	T716-125-7								TIMER, (K6) 12.5 second delay drop out (72152) (Lockheed spec dwg 619340-1) (intchg wth TD402-12-55)	1	
									Attaching Parts		
	AN960D6								WASHER (88044)	4	
	MS35338-41								WASHER (96906)	4	
	MS20341-6S								NUT (96906)	4	
									*		
-56	9302-5964A								RELAY, (K2) DPDT 10 Amp miniature (A3051) (35344) (Lockheed spec dwg 613683-1) (intchg wth AH23CN460AB)	32	
	AH23CN460AB								RELAY, (K2) DPDT 10 Amp miniature (72152) (Lockheed spec dwg 613683-1) (intchg wth 9302-5964A)	REF	
									Attaching Parts		
	AN960D4								WASHER (88044)	4	
	MS35338-40								WASHER (96906)	4	
	MS20341-4S								NUT (96906)	4	
									*		

Figura e particolare	NDR	1	2	3	4	5	6	7	DENOMINAZIONE	Quant.	Codice applicab.
182-57	AN3324-1			.	.	.	.	.	RELAY, (K4) 25 Amp (88044)	1	
									Attaching Parts		
	AN515-8R10			.	.	.	.	.	SCREW (88044)	2	
	AN960D8			.	.	.	.	.	WASHER (88044)	2	
	22K1-82			.	.	.	.	.	NUT (72962)	2	
-58	764534			.	.	.	.	.	DECAL, high voltage warning	1	
-59	761061-9			.	.	.	.	.	DECAL, electronic compartment junction box (emergency power relay)	1	
-59A	JAN1N540			.	.	.	.	.	DIODE (81349)	1	
-60	LS1909-2			.	.	.	.	.	TERMINAL BLOCK ASSY, electrical (36659)	1	
									Attaching Parts		
	AN515-4R6			.	.	.	.	.	SCREW (88044)	2	
	AN960D4			.	.	.	.	.	WASHER (88044)	2	
	MS21042L04			.	.	.	.	.	NUT (96906)	2	
-61	LS4999A1-10			.	.	.	.	.	STRIP, terminal block insulator (36659)	1	
-62	MS25226-2-5			.	.	.	.	.	BUS BAR (96906)	1	
-63	LS4998T87			.	.	.	.	.	DECAL, terminal block identification (36659)	1	
-64	AN520-10R10			.	.	.	.	.	SCREW (grd stud) (88044)	1	
	AN936A10			.	.	.	.	.	WASHER (grd stud) (88044)	1	
	AN935-10L			.	.	.	.	.	WASHER (grd stud) (88044)	1	
	AN345-10			.	.	.	.	.	NUT (grd stud) (88044)	1	
	AN960-10L			.	.	.	.	.	WASHER (grd stud) (88044)	1	
	MS21042L3			.	.	.	.	.	NUT (grd stud) (96906)	1	
-65	AN520-10R18			.	.	.	.	.	SCREW (88044)	1	
	MS21919WDG22			.	.	.	.	.	CLAMP (96906)	1	
	LS607-16			.	.	.	.	.	SPACER (36659)	1	
	AN960D10			.	.	.	.	.	WASHER (88044)	2	
	MS21042L3			.	.	.	.	.	NUT (96906)	1	
-66	18034			.	.	.	.	.	FILTER, (FL4) electrical (56289)	1	
									Attaching Parts		
	AN520-10R8			.	.	.	.	.	SCREW (88044)	3	
	AN960D10			.	.	.	.	.	WASHER (88044)	3	
	MS21042L3			.	.	.	.	.	NUT (96906)	3	
-67	785729-1			.	.	.	.	.	FAIRLEAD, electronic compartment junction box	1	
-68	850028-101			.	.	.	.	.	FAIRLEAD, electronic compartment junction box	1	
									Attaching Parts		
	AN515-8R12			.	.	.	.	.	SCREW (88044)	4	
	AN960D8			.	.	.	.	.	WASHER (88044)	4	
	MS21042L08			.	.	.	.	.	NUT (96906)	4	
-69	850053-101			.	.	.	.	.	DECAL, junction box TB7	1	
-70	851406-101	A.		.	.	.	.	.	DECAL, junction box cover	1	6701-6765
-70A	851923-101	B.		.	.	.	.	.	DECAL, junction box cover	1	6701-6815
	852267-101			.	.	.	.	.	DECAL, junction box cover	1	6816-
-70B	850032-101			.	.	.	.	.	DECAL, electronic compartment junction box	1	6701-6765
	851920-101			.	.	.	.	.	DECAL, electronic compartment junction box	1	6766-
-70C	786530-1			.	.	.	.	.	DECAL, junction box noise filter	1	
-71	850027-101			.	.	.	.	.	BOX ASSY, electric compartment junction	1	
-72	766737-1			.	.	.	.	.	CLIP, hinge pin locking	1	
									Attaching Parts		
	NAS623-3-2			.	.	.	.	.	SCREW (80205)	1	
	AN960D10			.	.	.	.	.	WASHER (88044)	1	
	MS21042L3			.	.	.	.	.	NUT (96906)	1	
-73	785135-17			.	.	.	.	.	PIN, electronic compartment junction box hinge	1	
-74	15797C			.	.	.	.	.	CATCH, draw pull (14608)	2	
-75	15794C			.	.	.	.	.	STRIKE, draw pull (14608)	2	

Figura e particolare	NDR	1 2 3 4 5 6 7 DENOMINAZIONE	Quant.	Codice applicab.
182-76	785135-19	. . . HINGE, electronic compartment junction box	1	
-77	785135-21	. . . HINGE, electronic compartment junction box	1	
	849621-101	. . HARNESS ASSY, junction box	1	6701-6765
	851909-101	. . HARNESS ASSY, junction box	1	6766-6815
	852268-101	. . HARNESS ASSY, junction box	1	6816-
	849616-101	. . . HARNESS ASSY, P-36 disconnect to junction box *(see fig. 180)* .	1	6701-6765
	851906-101	. . . HARNESS ASSY, P-36 disconnect to junction box *(see fig. 180)* .	1	6766-
	849617-101	. . . HARNESS ASSY, P-37 disconnect to junction box *(see fig. 180)* .	1	6701-6815
	852269-101	. . . HARNESS ASSY, P-37 disconnect to junction *(see fig. 180)* . .	1	6816-
	849619-101	. . . HARNESS ASSY, P-44 disconnect to junction box *(see fig. 180)* .	1	6701-6765
	851907-101	. . . HARNESS ASSY, P-44 disconnect to junction box *(see fig. 180)* .	1	6766-6815
	852416-101	. . . HARNESS ASSY, P-44 disconnect to junction box *(see fig. 180)* .	1	6816-
	849618-101	. . . HARNESS ASSY, junction box P-41 disconnect to equipment . .	1	
-78	EMRA34SF2A116	. . . . CONNECTOR, (J22) receptacle (P-41 disconnect) (81312) . .	1	
	849614-101	. . . HARNESS ASSY, junction box cover equipment jumpers . . .	1	6701-6815
	852270-101	. . . HARNESS ASSY, junction box cover equipment jumpers . . .	1	6816-
-79	MS3102A18-9S	. . . . CONNECTOR, (J82) receptacle (test junction box) (96906) . .	1	
	849611-101	. . . HARNESS ASSY, junction box P-140 disconnect	1	6701-6765
	851905-101	. . . HARNESS ASSY, junction box P-140 disconnect	1	6766-
-80	EMRA42SF2116	. . . . CONNECTOR, (J171) receptacle (P-140 disc.) (81312) . . .	1	
	849612-101	. . . HARNESS ASSY, junction box P-141 disconnect	1	
-81	EMRA42SF2A116	. . . . CONNECTOR, (J19) receptacle (P-141 disc.) (81312) . . .	1	
	849766-101	. HARNESS ASSY, electronic compartment rack *(see fig. 183 for reqd)* . .	REF	6701-6740
	849879-101	. HARNESS ASSY, electronic compartment rack *(see fig. 183 for reqd)* . .	REF	6741-6815
	852288-101	. HARNESS ASSY, electronic compartment rack *(see fig. 183 for reqd)* . .	REF	6816-
-82	EMRA34PM1A106	. . CONNECTOR, (P65) plug (P-41 disconnect) (81312)	1	
	SS48152	I. PLUG, button (61864)	1	
	AN515-4R4	I. SCREW (88044)	1	
	MS21042L04	I. NUT (96906)	1	
-83	LS7501-1	L. CIRCUIT BREAKER, (CB5) 1 Amp push pull (36659)	1	
-84	FL0441-107	L. DECAL, fatigue meter (A0019)	1	

A - Removed per AA.1F-104S-OT-148
B - Reqd per AA.1F-104S-OT-148
C - Removed per AA.1F-104S-OT-148 and AA.1F-104S-OT-152
D - Reqd per AA.1F-104S-OT-148 and AA.1F-104S-OT-152
E - Removed per AA.1F-104S-OT-152
F - Reqd per AA.1F-104S-OT-152
G - Reqd per AA.1F-104-OT-759B
H - Removed per AA.1F-104-OT-759B
I - Removed per AA.1F-104-OT-710A
L - Reqd per AA.1F-104-OT-710A

Figura e particolare	NDR	1 2 3 4 5 6 7 DENOMINAZIONE	Quant.	Codice applicab.
		ELECTRONIC COMPARTMENT RACK		
183	795114-101	RACK INSTL, integrated electronics system *(see fig. 156 for reqd)*	REF	
	783484-7	BRACKET INSTL, integrated electronics system	1	
- 1	785145-1	BRACKET, fus sta 310 upper mount	2	
		Attaching Parts		
- 2	MS20004-12	BOLT (96906)	4	
	MS20002-4	WASHER (96906)	4	
	MS20002C4	WASHER (96906)	4	
	EB048	NUT, 12 point high tension (72962)	4	
- 3	783484-21	PLATE, integrated electronics rack	1	
		Attaching Parts		
- 4	NAS623-3-6	SCREW (80205)	8	
	AN960D10	WASHER (88044)	8	
	MS21042L3	NUT (96906)	8	
- 5	LP6-6A	BOLT (03038)	2	
- 6	LP608-5-10PM	SCREW (03038)	4	
- 7	783484-29	BOND, integrate electronics rack	4	
- 8	J9013-1	MOUNT, bottom resilient (76005) (Lockheed spec dwg 602020-1)	4	
		Attaching Parts		
	NAS623-3-4	SCREW (80205)	4	
	MS21042L3	NUT (96906)	4	
- 9	792313-105	RACK ASSY, integrated electronics system	1	6701-6815
	792313-111	RACK ASSY, integrated electronics system	1	6816-
	792313-109	FRAME ASSY, integrated electronics rack (reqd on 792313-105 and 792313-111)	1	
-10	J9009-1	MOUNT, fwd resilient (76005) (Lockheed spec dwg 602018-1)	1	
		Attaching Parts		
-11	NAS1104-8	BOLT (80205)	2	
-12	NAS1104-10	BOLT (80205)	2	
-13	AN960D416	WASHER (88044)	2	
-13A	AN960D416	WASHER (88044)	2	
-14	MS21042L4	NUT (96906)	2	
-15	J9118-2	MOUNT, aft resilient (76005) (Lockheed spec dwg 602019-3)	2	
		Attaching Parts		
-16	NAS1104-8	BOLT (80205)	1	
-17	NAS1104-10	BOLT (80205)	1	
-18	AN960D416	WASHER (88044)	1	
-18A	AN960D416	WASHER (88044)	1	
-19	MS21042L4	NUT (80205)	1	
-20	LS3850-2-10	SHIELD ASSY, terminal block (36659)	2	
-21	LS1909-42	TERMINAL BLOCK ASSY, electrical (36659)	1	
		Attaching Parts		
	AN515-4R6	SCREW (88044)	2	
	MS21042L04	NUT (96906)	2	
-22	LS4999A41-50	STRIP, terminal block insulating and numbering (36659)	1	
-23	LS3850-2-20	SHIELD ASSY, terminal block (36659)	2	
-24	LS1919-22	TERMINAL BLOC ASSY, electrical (36659)	1	
		Attaching Parts		
	AN515-4R6	SCREW (88044)	3	
	MS21042L04	NUT (96906)	3	
-25	LS4999A21-40	STRIP, terminal block insulating and numbering (36659)	1	
-26	LS1919-2	TERMINAL BLOCK ASSY, electrical (36659)	1	

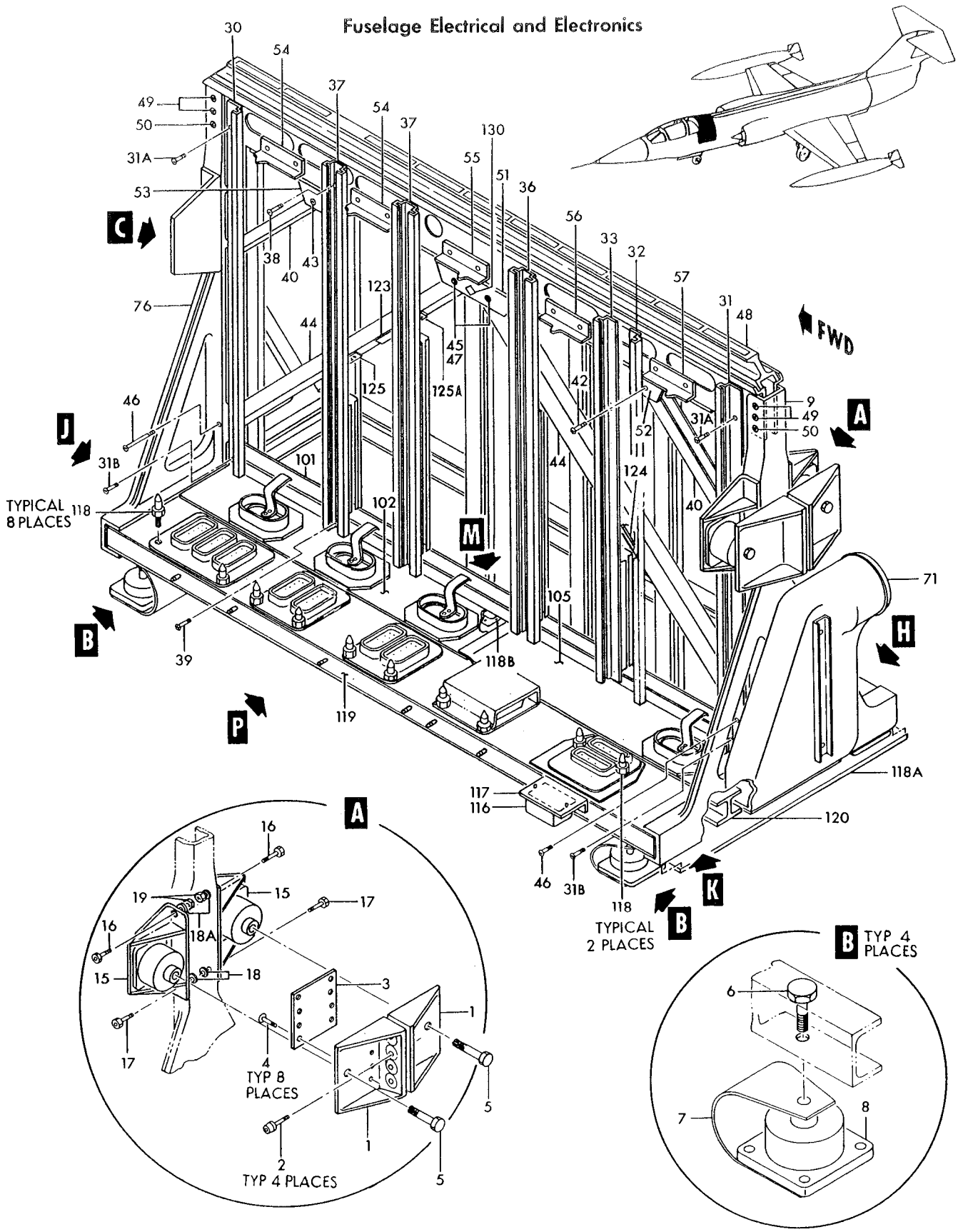

Figure 183— Electronic Compartment Rack (Sheet 1 of 5)

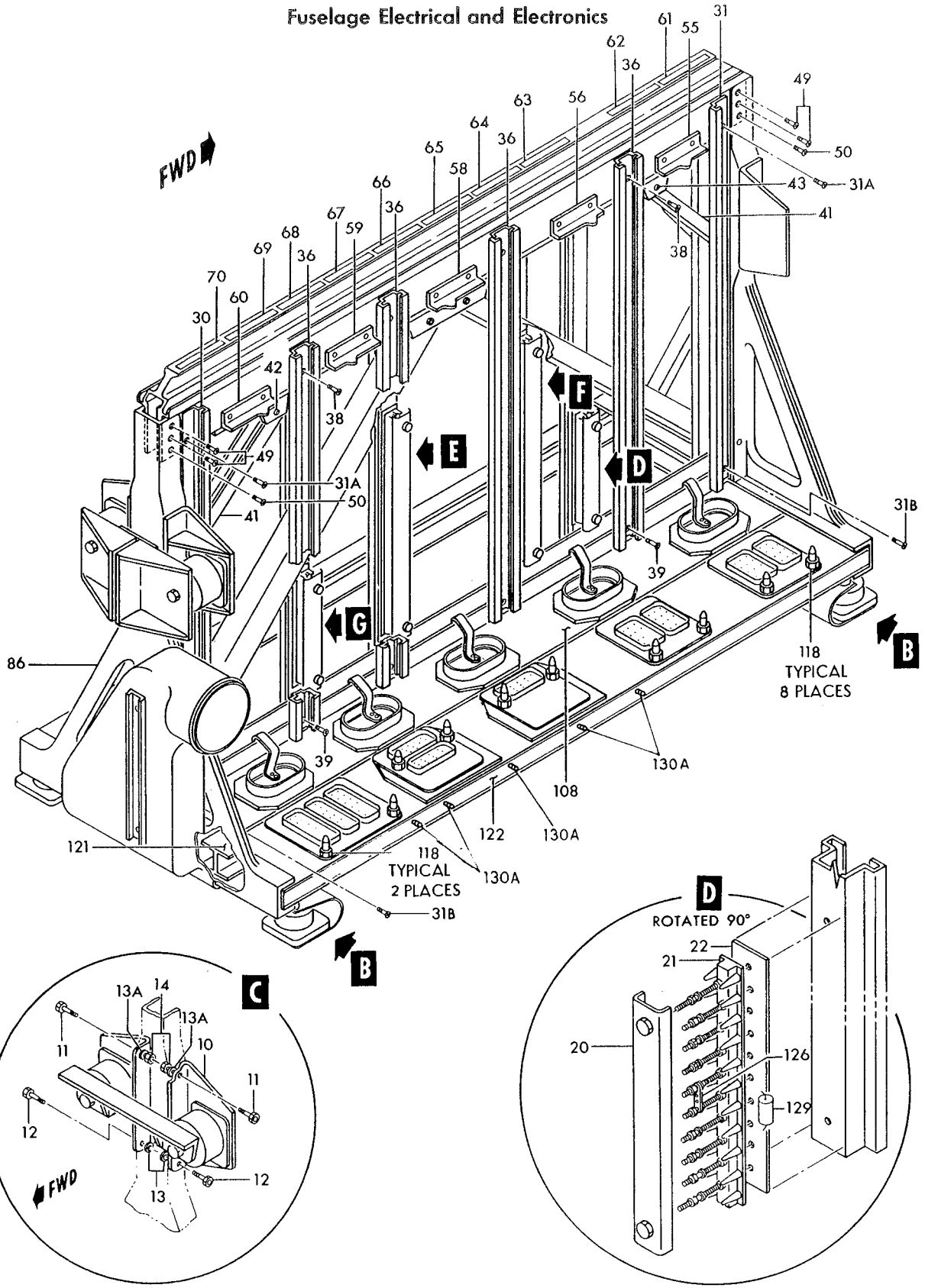

Figure 183—Electronic Compartment Rack (Sheet 2 of 5)

Fuselage Electrical and Electronics

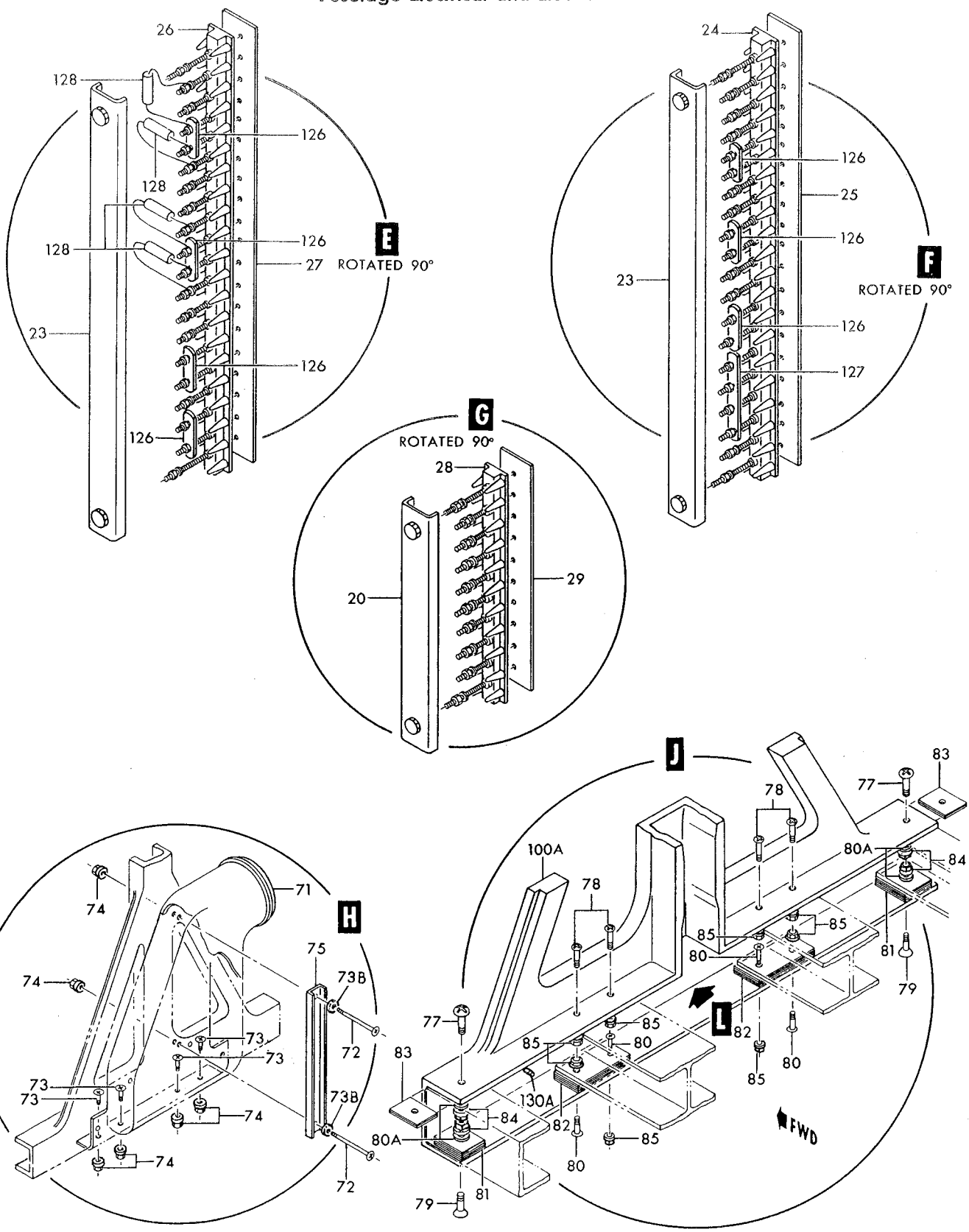

Figure 183—Electronic Compartment Rack (Sheet 3 of 5)

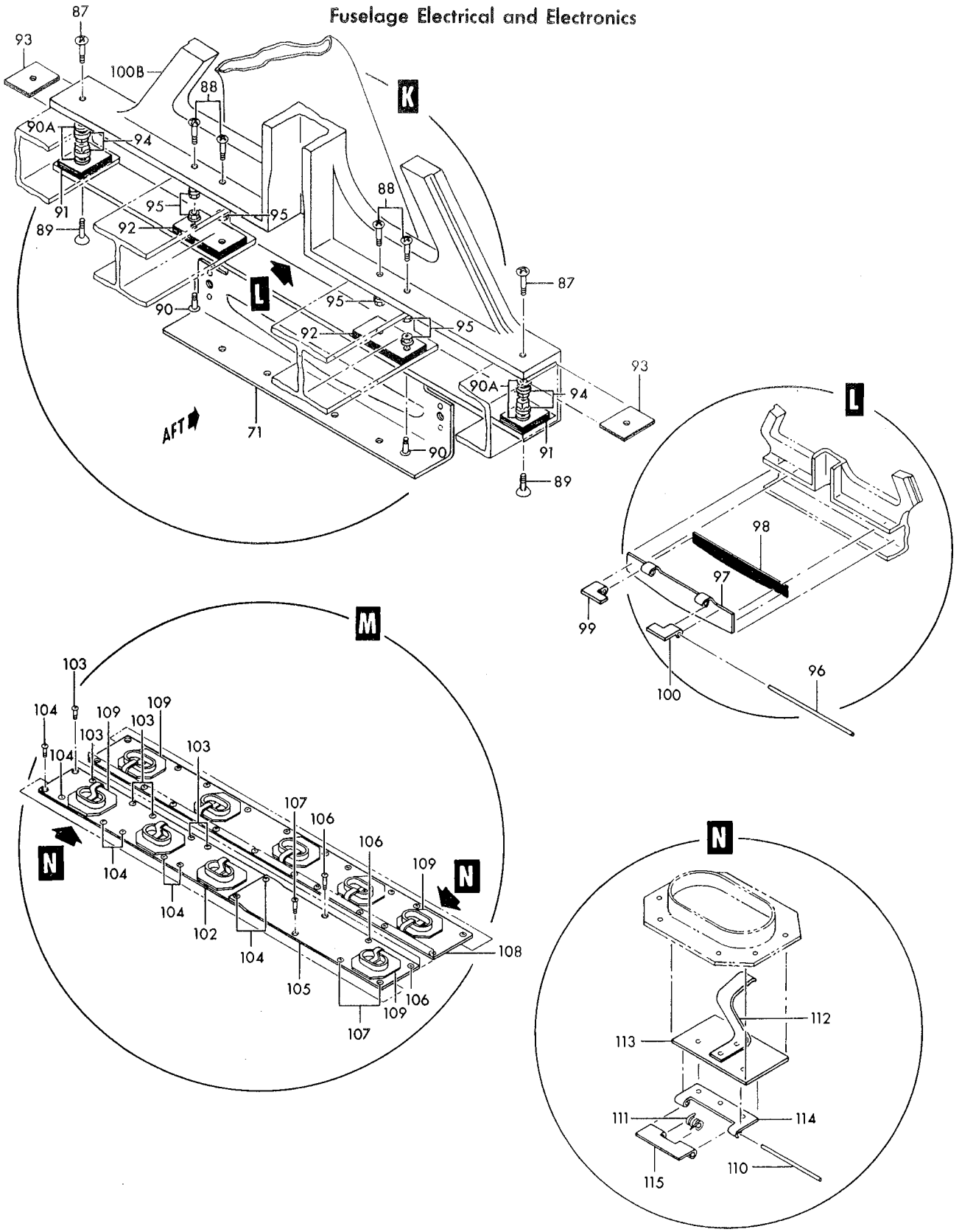

Figure 183— Electronic Compartment Rack (Sheet 4 of 5)

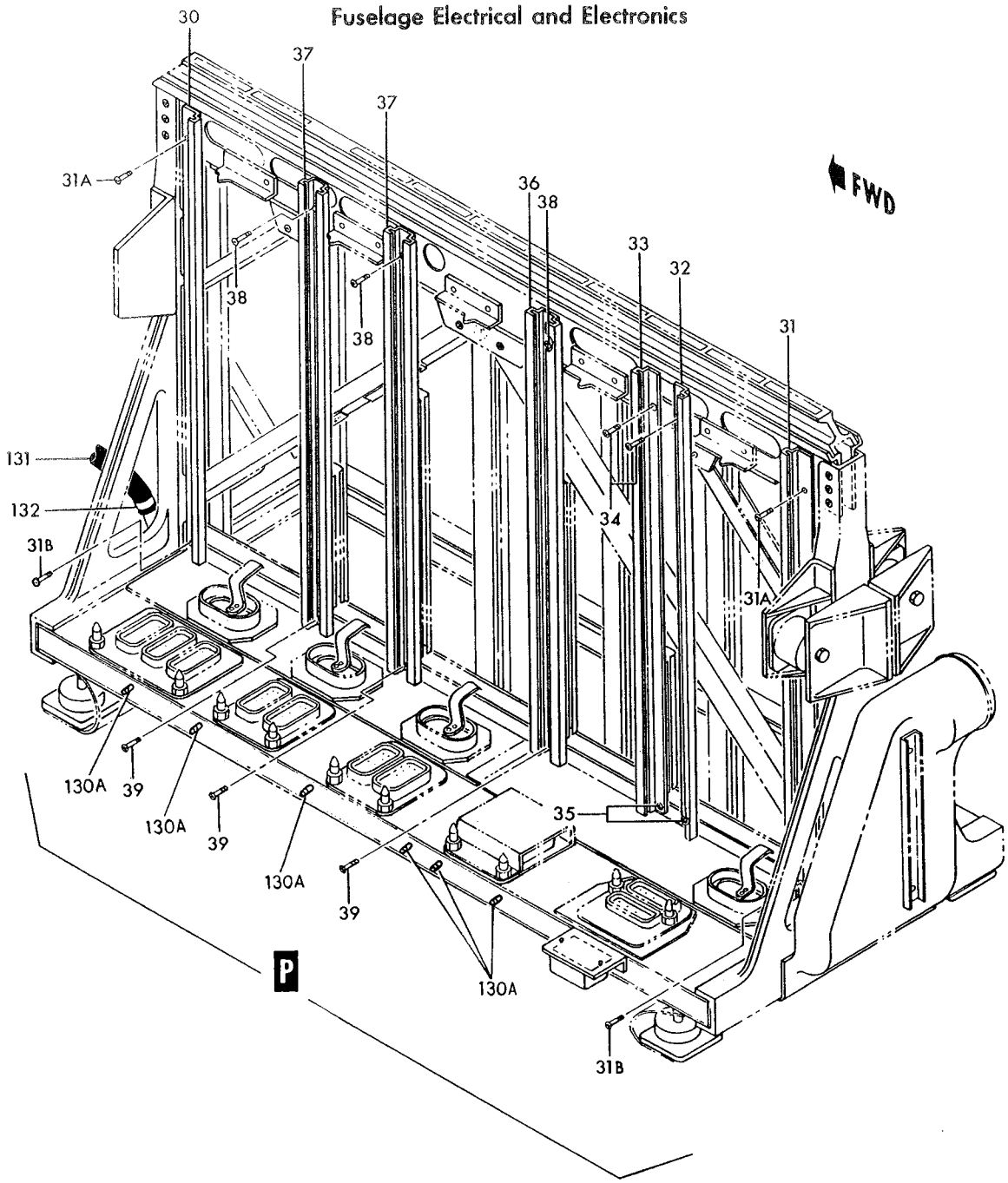

Figure 183— Electronic Compartment Rack (Sheet 5 of 5)

Figura e particolare	NDR	1 2 3 4 5 6 7	DENOMINAZIONE	Quant.	Codice applicab.
			Attaching Parts		
183	AN515-4R6	. . .	SCREW (88044)	3	
	MS21042L04	. . .	NUT (96906)	3	
			———————✲———————		
-27	LS4999A1-20	. . .	STRIP, terminal block insulating and numbering (36659)	1	
-28	LS1909-52	. . .	TERMINAL BLOCK ASSY, electrical (36659)	1	
			Attaching Parts		
	AN515-4R6	. . .	SCREW (88044)	2	
	MS21042L04	. . .	NUT (96906)	2	
			———————✲———————		
-29	LS4999A51-60	. . .	STRIP, terminal block insulating and numbering (36659)	1	
-30	785329-1	. . .	TRACK, integrated electronics rack	2	
-31	785329-2	. . .	TRACK, integrated electronics rack	2	
			Attaching Parts		
-31A	NAS623-3-3	. . .	SCREW (80205)	1	
-31B	NAS623-3-2	. . .	SCREW (80205)	1	
	MS21042L3	. . .	NUT (96906)	2	
			———————✲———————		
-32	783529-1	. . .	TRACK, integrated electronics rack	1	
-33	793314-1	. . .	TRACK, integrated electronics rack	1	
			Attaching Parts		
-34	NAS623-3-4	. . .	SCREW (80205)	1	
-35	NAS623-3-2	. . .	SCREW (80205)	1	
	MS21042L3	. . .	NUT (96906)	2	
			———————✲———————		
-36	785330-1	. . .	TRACK, integrated electronics rack	5	
-37	785330-3	. . .	TRACK, integrated electronics rack	2	
			Attaching Parts		
-38	NAS623-3-4	. . .	SCREW (80205)	1	
-39	NAS623-3-2	. . .	SCREW (80205)	1	
	MS21042L3	. . .	NUT (96906)	2	
			———————✲———————		
-40	786272-1	. . .	BRACE ASSY, integrated electronics rack	2	
-41	786272-2	. . .	BRACE ASSY, integrated electronics rack	2	
			Attaching Parts		
-42	NAS623-3-4	. . .	SCREW (80205)	1	
-43	NAS517-3-2	. . .	SCREW (80205)	1	
			———————✲———————		
-44	785306-1	. . .	BRACE, integrated electronics rack	2	
			Attaching Parts		
-45	NAS623-3-18	. . .	SCREW (80205)	1	
-46	NAS623-3-26	. . .	SCREW (80205)	1	
-47	AN960D10	. . .	WASHER (88044)	1	
	NAS43DD3-56	. . .	SPACER (80205)	2	
	MS21042L3	. . .	NUT (96906)	2	
			———————✲———————		
-48	785307-503	. . .	CAP ASSY, integrated electronics rack	1	
			Attaching Parts		
-49	NAS623-3-4	. . .	SCREW (80205)	8	
-50	NAS623-3-5	. . .	SCREW (80205)	4	
	MS21042L3	. . .	NUT (96906)	12	
			———————✲———————		
-51	785305-1	. . .	CLIP, integrated electronics rack	1	
			Attaching Parts		
	NAS623-3-3	. . .	SCREW (80205)	4	
			———————✲———————		
-52	786273-1	. . .	BRACKET, integrated electronics rack	1	
-53	787879-1	. . .	BRACKET, integrated electronics rack	1	
			Attaching Parts		
	NAS623-3-3	. . .	SCREW (80205)	2	
			———————✲———————		

Figura e particolare	NDR	DENOMINAZIONE	Quant.	Codice applicab.
183-54	767283-37	STOP, electronics rack instrument	2	
-55	767283-13	STOP, electronics rack instrument	2	
-56	767283-27	STOP, electronics rack instrument	2	
-57	767283-17	STOP, electronics rack instrument	1	
-58	767283-35	STOP, electronics rack instrument	1	
-59	767283-7	STOP, electronics rack instrument	1	
-60	767283-21	STOP, electronics rack instrument	1	
		Attaching Parts		
	NAS623-3-4	SCREW (80205)	2	
	MS21042L3	NUT (96906)	2	
		*		
-61	785361-1	NAMEPLATE, radar amplifier and calibration control	1	
-62	785356-1	NAMEPLATE, inertial navigator computer	1	
-63	785355-1	NAMEPLATE, air data computer	1	
-64	785359-1	NAMEPLATE, radar low voltage power supply	1	
-65	785360-1	NAMEPLATE, radar armament control computer	1	
-66	785353-1	NAMEPLATE, IFF transponder	1	
-67	785354-1	NAMEPLATE, M2 bomb computer	1	
-68	785362-1	NAMEPLATE, Tacan receiver-transmitter	1	
-69	785357-1	NAMEPLATE, UHF receiver-transmitter	1	
-70	785352-1	NAMEPLATE, auto-pilot computer	1	
		Attaching Parts		
	AN535-2-2	SCREW (88044)	2	
		*		
-71	784398-1	DUCT ASSY, electronic compartment emergency cooling *(see fig. 151)*	1	
		Attaching Parts		
-72	NAS623-3-34	SCREW (80205)	2	
-73	NAS517-3-4	SCREW (80205)	4	
-73B	AN960D10	WASHER (88044)	2	
-74	MS21042L3	NUT (96906)	6	
		*		
-75	784591-1	CHANNEL, emergency cooling air duct	1	
-76	785311-101	FRAME ASSY, integrated electronics rack cooling air check valve fwd	1	
		Attaching Parts		
-77	NAS623-4-5	SCREW (80205)	2	
-78	NAS623-3-5	SCREW (80205)	4	
-79	NAS517-4-4	SCREW (80205)	2	
-80	NAS517-3-4	SCREW (80205)	4	
-80A	AN960D416	WASHER (88044)	4	
-81	783950-3	SHIM, rack frame	8	
-82	783950-5	SHIM, rack frame	8	
-83	783950-7	SHIM, rack frame	4	
-84	MS21042L4	NUT (96906)	4	
-85	MS21042L3	NUT (96906)	8	
		*		
-86	785311-103	FRAME ASSY, integrated electronics rack cooling air check valve aft	1	
		Attaching Parts		
-87	NAS623-4-5	SCREW (80205)	2	
-88	NAS623-3-5	SCREW (80205)	4	
-89	NAS517-4-4	SCREW (80205)	2	
-90	NAS517-3-4	SCREW (80205)	2	
-90A	AN960D416	WASHER (88044)	4	
-91	783950-3	SHIM, rack frame	8	
-92	783950-5	SHIM, rack frame	8	
-93	783950-7	SHIM, rack frame	4	
-94	MS21042L4	NUT (96906)	4	
-95	MS21042L3	NUT (96906)	6	
		*		
	785311-105	VALVE ASSY, integrated electronics rack cooling air check	1	
-96	785311-11	PIN, air check valve hinge	1	

Figura e particolare	NDR	1 2 3 4 5 6 7 DENOMINAZIONE	Quant.	Codice applicab.
183-97	785311-9	FLAPPER, air check valve	1	
-98	785311-107	GASKET, air check valve	1	
-99	785311-7	HINGE, air check valve	1	
-100	785311-8	HINGE, air check valve	1	
-100A	785089-1	FRAME, integrated electronics rack fwd	1	
-100B	785090-1	FRAME, integrated electronics rack aft	1	
-101	785310-503	CHANNEL ASSY, integrated electronics rack	1	
		Attaching Parts		
	NAS623-3-3	SCREW (80205)	4	
	MS21042L3	NUT (96906)	4	
-102	784716-1	PLATE ASSY, LH fwd tee rack air vent	1	
		Attaching Parts		
-103	AN515-8R6	SCREW (88044)	6	
-104	AN515-8R8	SCREW (88044)	8	
-105	791901-1	PLATE ASSY, LH aft tee rack air vent	1	
		Attaching Parts		
-106	AN515-8R6	SCREW (88044)	3	
-107	AN515-8R8	SCREW (88044)	3	
-108	784714-1	PLATE ASSY, RH tee rack air vent	1	
		Attaching Parts		
	AN515-8R6	SCREW (88044)	20	
-109	784711-1	VENT, tee rack air (1 reqd on 791901-1, 3 reqd on 784716-1 and 5 reqd on 784714-1)	AR	
	784710-1	FLAP ASSY, tee rack air vent 1 reqd on 791901-1, 3 reqd on 784716-1 and 5 reqd on 784714-1)	AR	
-110	771727-1	PIN, hinge	1	
-111	728356-1	SPRING, vent flap hinge	1	
-112	784712-1	ARM, tee rack air vent	1	
-113	784718-1	FLAP, tee rack air vent	1	
-114	771014-1	HINGE, air vent half	1	
-115	784713-1	HINGE, flap closure half	1	
-116	17997A	FILTER, (FL3) radio noise (56289)	1	
		Attaching Parts		
	AN515-8R6	SCREW (88044)	2	
	MS21042L08	NUT (96096)	2	
-117	786990-1	BRACKET, radio noise filter	1	
		Attaching Parts		
	AN520-10R8	SCREW (88044)	2	
	MS21042L3	NUT (96906)	2	
-118	797664-1	PIN, rack aligning	20	
-118A	785327-1	PLATE ASSY, integrated electronics rack	1	
		Attaching Parts		
	AN515-8R8	SCREW (88044)	18	
-118B	786363-1	PAD, integrated electronics rack	1	
		Attaching Parts		
	AN507-832R8	SCREW (88044)	6	
-119	785303-1	CHANNEL ASSY, LH side integrated electronics rack	1	
-120	785301-1	BEAM ASSY, LH side integrated electronics rack	1	
-121	785300-1	BEAM ASSY, RH side integrated electronics rack	1	
-122	785302-1	CHANNEL ASSY, RH side integrated electronics rack	1	
	849909-101	ELECTRICAL INSTL, integrated electronics rack *(reqd on 792313-105)*	1	6701-6815
	849909-103	ELECTRICAL INSTL, integrated electronics rack *(reqd on 792313-111)*	1	6816-

Figura e particolare	NDR	1 2 3 4 5 6 7 DENOMINAZIONE	Quant.	Codice applicab.
183	849766-101	HARNESS ASSY, electronic compartment rack *(see fig. 178, 179, 180 and 182)*	1	6701-6740
	849879-101	HARNESS ASSY, electronic compartment rack *(see fig. 178, 179, 180 and 182)*	1	6741-6815
	852288-101	HARNESS ASSY, electronic compartment rack *(see fig. 178, 179, 180 and 182)*	1	6816-
-123	786674-1	DECAL, electronics rack wiring	1	
-124	849843-101	DECAL, electronics rack wiring	1	
-125	796147-1	DECAL, electronics rack wiring	1	
-125A	851314-101	DECAL, TB43 wiring	1	
-126	MS25226-2-2	BUS (96906)	8	
-127	MS25226-2-4	BUS (96906)	1	
-128	M22684-02-0058	RESISTOR, (R15) 150 Ohm 0,5 W (81349)	4	
-129	1D48F180	RESISTOR, (R20) 5 W 180 Ohm (44655)	1	
-130	LS4998TB43	DECAL, terminal block identification (36659)	1	
-130A	NAS1096-3-12	SCREW (grd stud) (80205)	12	
	AN936A10	WASHER (grd stud) (88044)	12	
	MS35337-43	WASHER (grd stud) (96906)	12	
	AN345-10	NUT (grd stud) (88044)	12	
	AN960D10	WASHER (grd stud) (88044)	12	
	MS21042L3	NUT (grd stud) (96906)	12	
-131	LS4487-5A16	HOSE, air duct (36659)	1	
-132	AN737TW46	CLAMP (88044)	1	

Figura e particolare	NDR	1 2 3 4 5 6 7 DENOMINAZIONE	Quant.	Codice applicab.
		GUN BAY ELECTRICAL		
184	849922-101	B. ELECTRICAL INSTL, gun bay (LH only) *(see fig. 30 for reqd)*	REF	
	851215-101	A. ELECTRICAL INSTL, gun bay (LH only) *(see fig. 30 for reqd)*	REF	
	851215-103	A. ELECTRICAL INSTL, fuel tank (LH only) *(see fig. 30 for reqd)*	REF	
	849652-101	. . HARNESS ASSY, case stowage to compartment fuel quantity *(see fig. 97 and 98)* (only on 849922-101 and 851215-103)	1	
	849654-101	. . HARNESS ASSY, gun motor control (only on 849922-101 and 851215-101)	1	
- 1	MS25183-28-1S	. . . CONNECTOR, (P97) plug (gun motor disc.) (96906)	1	
	849661-101	. . HARNESS ASSY, P-137 disc. to AC load center (only on 849922-101 and 851215-101)	1	
- 2	EMRA20SF2A116	. . . CONNECTOR, (J34) recp (P-137 disc. gun bay) (81312)	1	
	849651-101	. . HARNESS ASSY, gun bay to case stowage compartment fuel quantity *(see fig. 98 and 99)* (only on 849922-101 and 851215-103)	1	
- 3	851202-101	B. . DECAL, AIM-7N ground cooling wiring	1	
- 4	851292-101	B. . DECAL, AIM-7N ground power wiring	1	
	799175-101	B. . SUPPORT ASSY, gun motor control harness	1	
- 5	CA2182-10	B. . . CONNECTOR, recp (DUMMY) (gun motor control harness) (71468)	1	
		Attaching Parts		
	NAS1096-3-8	B. . SCREW (80205)	2	
	MS21042L3	B. . NUT (96906)	2	
		*		
- 6	AN3064-8	. . BOX CONNECTOR (88044)	2	
- 7	AN3066-8	. . NUT (88044)	2	
- 8	MS3057-8A	. . ADAPTER (96906)	1	
- 9	MS3057-8B	. . ADAPTER (96906)	1	
- 9A	791526-1	A. . BRACKET, T-12 gun feeder recp	1	
		Attaching Parts		
	AN520-10R8	A. . SCREW (88044)	2	
		*		
- 9B	NAS1096-3-12	A. . SCREW (grd stud) (80205)	3	
	AN936A10	A. . WASHER (grd stud) (80205)	3	
	MS35337-43	A. . WASHER (grd stud) (96906)	3	
	AN345-10	A. . NUT (grd stud) (88044)	3	
	AN960D10	A. . WASHER (grd stud) (88044)	3	
	MS2104213	A. . NUT (grd stud) (96906)	3	
	849663-101	B. . HARNESS ASSY, gun by AIM-7N	1	
-10	EMRA104PM1A106	B. . . CONNECTOR, (P32) plug (P-166 disc.) (81312)	1	
-11	MS3116P20-39S	B. . . CONNECTOR, (P452) plug (AIM-7N low voltage power supply) (96906)	1	
-12	UG1033U	B. . . CONNECTOR, (P455) plug (AIM-7N low voltage power supply) (80058)	1	
-13	5835-1	B. . . CONNECTOR, (P456) plug (AIM-7N low voltage power supply) (95712)	1	
-14	MS3116P14-12S	B. . . CONNECTOR, (P364) plug (cooling unit) (96906)	1	
-15	MS25183-28-12S	B. . . CONNECTOR, (P393) plug (AIM-7N CW transmitter) (96906)	1	
-16	MRE7S	B. . . CONNECTOR, (P454) plug (AIM-7N CW transmitter) (81312)	1	
-17	MS3116P28-21S	B. . . CONNECTOR, (P370) plug (AIM-7N relay box) (96906)	1	
-18	MS3116P22-21PW	B. . . CONNECTOR, (P447) plug (AIM-7N relay box) (96906)	1	
-19	MS3116P22-21PX	B. . . CONNECTOR, (P448) plug (AIM-7N relay box) (96906)	1	
-20	MS3116P22-21PY	B. . . CONNECTOR, (P449) plug (AIM-7N relay box) (96906)	1	
-21	DPG21-34SA	B. . . CONNECTOR, (P451) plug (AIM-7N R WG tuner) (71468)	1	
-22	DPG21-34SA	B. . . CONNECTOR, (P451) plug (AIM-7N L WG tuner) (71468)	1	
-22A	EMRA104EC23	A. . COVER (81312) (NHA 850191-101)	1	
	851070-101	B. . COAXIAL CABLE, sparrow transmitter to WL96 disc. signal horn ant.	1	6701-6815
	852392-101	B. . HARNESS ASSY, sparrow transmitter to WL96 disc. signal horn ant.	1	6816-
-23	UG1185A/U	B. . . CONNECTOR, (P17) plug (sparrow transmitter and WL96 disc.) (80058)	2	
-24	MS90156-27D	B. . . ADAPTER (96906)	1	
	Z158	C. . . GRIP (04073)	2	
-25	UG30D/U	B. . ADAPTER (J148) (80058)	1	
-25A	9225	A. . CAP (74868) (NHA 850181-101)	1	
	849989-101	B. . CAPACITOR INSTL, gun bay fuel indicator loading	1	
-26	DG10F7	B. . . CAPACITOR, (C9) fixed mica (fuel) (A0019) (94580) (Lockheed spec dwg 624385-103)	1	

Fuselage Electrical and Electronics

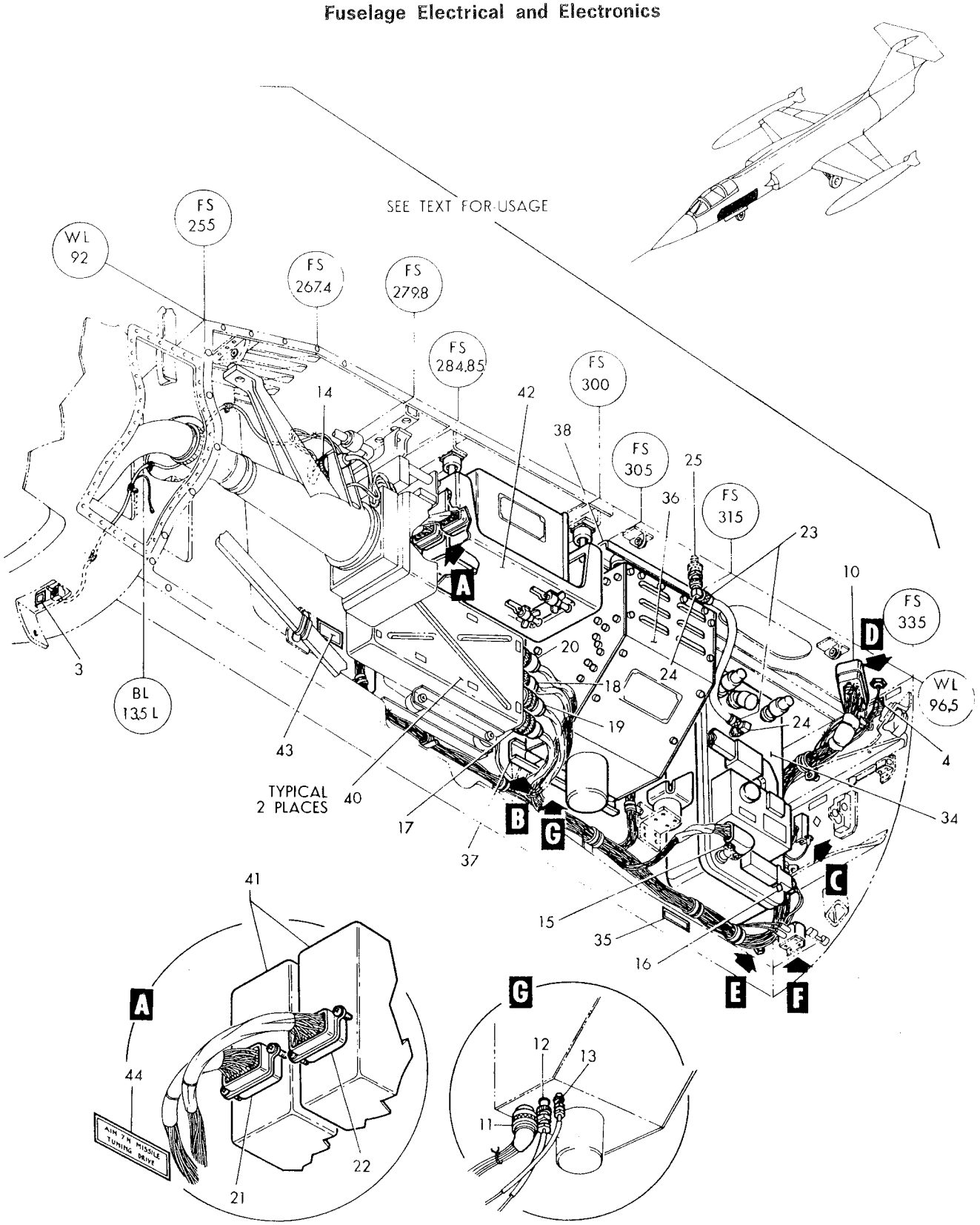

Figure 184-Gun Bay Electrical (Sheet 1 of 3)

Fuselage Electrical and Electronics

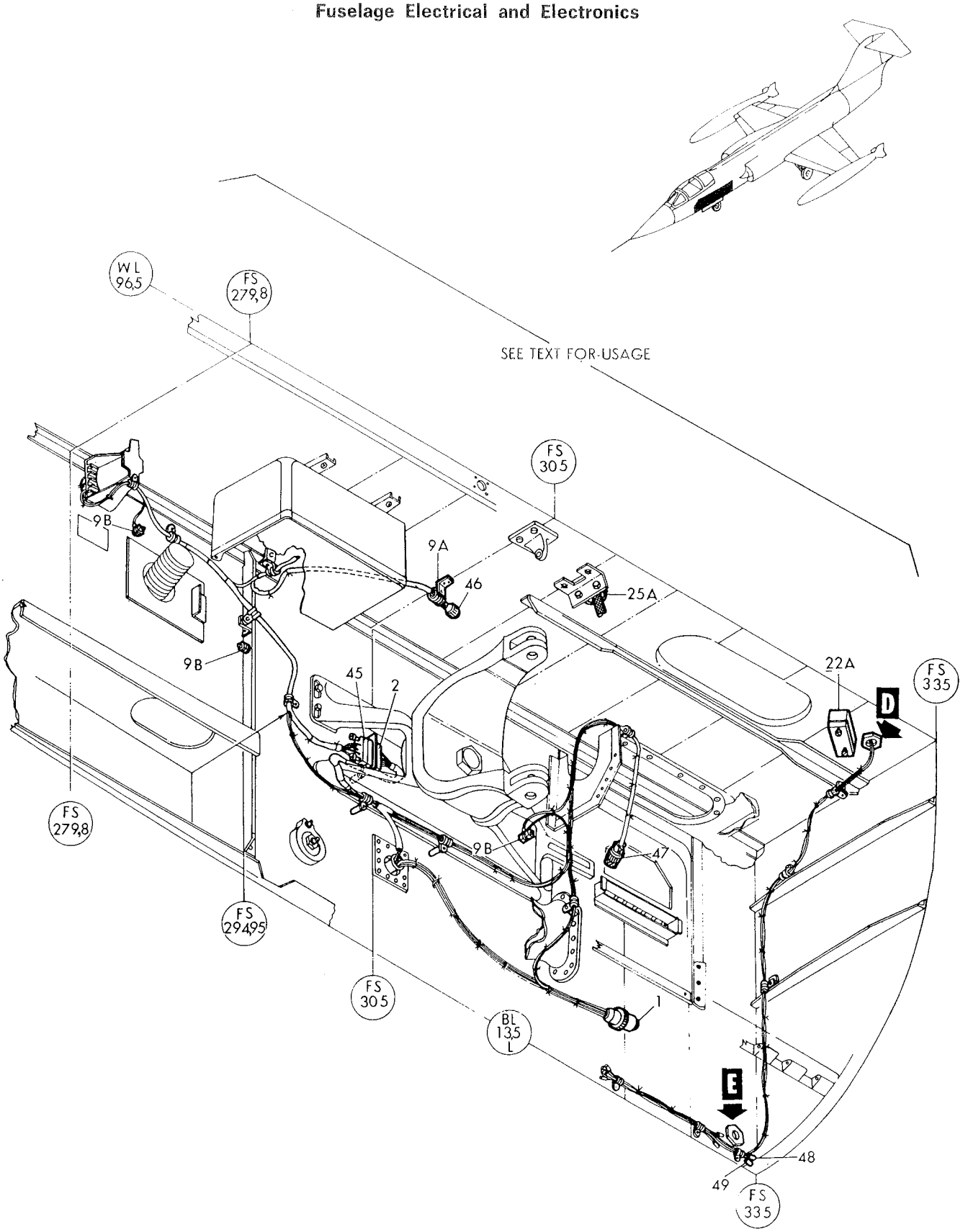

Figure 184-Gun Bay Electrical (Sheet 2 of 3)

Fuselage Electrical and Electronics

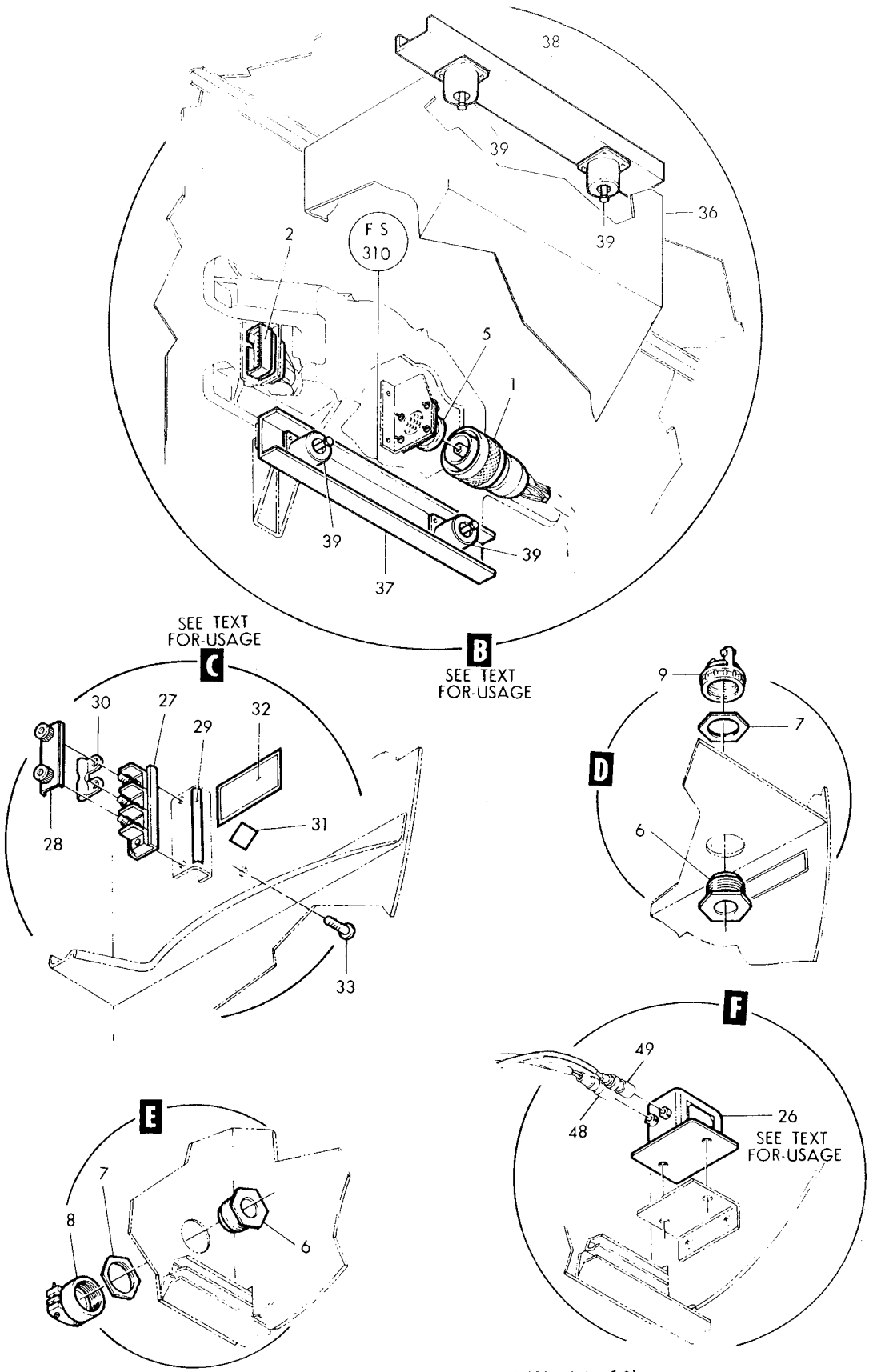

Figure 184-Gun Bay Electrical (Sheet 3 of 3)

Figura e particolare	NDR	1 2 3 4 5 6 7	DENOMINAZIONE	Quant.	Codice applicab.
			Attaching Parts		
184	NAS601-6	B. . .	SCREW (80205)	2	
	AN960D6	B. . .	WASHER (88044)	2	
	MS21042L06	B. . .	NUT (96906)	2	
-27	LS7000A6-3	B. . .	TERMINAL BLOCK ASSY, electrical (36659)	1	
			Attaching Parts		
	NAS601-10	B. . .	SCREW (80205)	2	
	AN960D6	B. . .	WASHER (88044)	2	
	MS21042L06	B. . .	NUT (96906)	2	
-28	LS7007-6-3	B. . .	COVER ASSY, terminal block assy (36659)	1	
-29	LS7009-6	B. . .	DECAL, terminal block identification (36659)	1	
-30	4V016-6-14-2	B. . .	BUS BAR, flexible (91812)	1	
-31	LS4998TB8	B. . .	DECAL, terminal block identification (36659)	1	
-32	850965-101	B. . .	DECAL, gun bay TB8 terminal block wiring	1	
-33	AN520-416R16	B. . .	SCREW (grd stud) (88044)	1	
	AN936A416	B. . .	WASHER (grd stud) (88044)	1	
	AN935-416L	B. . .	WASHER (grd stud) (88044)	1	
	AN315-4R	B. . .	NUT (grd stud) (88044)	1	
	AN960-416	B. . .	WASHER (grd stud) (88044)	1	
	MS21042L4	B. . .	NUT (grd stud) (96906)	1	
	850688-101	B.	TRANSMITTER INSTL, gun bay sparrow (NHA 849070-101)	1	
-34	107132A1	B. .	TRANSMITTER, (TR22) klystron AIM-7E (A1615) (Alternate to 281554) (see AA.11-128577A1-4) (Lockheed spec dwg 670952-101)	1	
	281554	B. .	TRANSMITTER, (TR22) klystron AIM-7E (49956) (Alternate to 107132A1) (Lockheed spec dwg 670952-101) (see sep pub. whn avail.)	REF	
			Attaching Parts		
	NAS1103-6	B. .	BOLT (80205)	16	
	MS21042L3	B. .	MUT (96906)	16	
-35	850702-101	B. .	DECAL, transmitter	1	
	850753-101	B.	EQUIPMENT INSTL, gun bay sparrow (849070-101)	1	
-36	107134A1	B. .	MODULATOR, (A51) power supply AIM-7E (A1615) (Alternate to 261954) (see AA.11-128577A1-4) (Lockheed spec dwg 670954-101)	1	
	261954	B. .	MODULATOR, (A51) power supply AIM-7E (49956) (Alternate to 107134A1) (Lockheed spec dwg 670954-101) (see sep pub whn avail.)	REF	
			Attaching Parts		
	NAS623-3-6	B. .	BOLT (80205)	2	
-37	850746-101	B. .	STIFFENER, power supply modulator lower	1	
-38	850749-101	B. .	STIFFENER, power supply modulator upper	1	
			Attaching Parts		
	NAS623-3-3	B. .	SCREW (80205)	16	
	MS21042L3	B. .	NUT (96906)	16	
-39	T44AA10	B.	SHOCK MOUNT (84971)	4	
	850890-101	B.	EQUIPMENT INSTL, sparrow klystron tuners and firing control relay box (NHA 849070-101)	1	
-40	107137A1	B. .	RELAY UNIT, (K51) fire control AIM-7E (A1615) (Alternate to 282564) (see AA.11-128577A1-4) (Lockheed spec dwg 670955-101)	2	
	282564	B. .	RELAY UNIT, (K51) fire control AIM-7E (49956) (Alternate to 107137A1) (Lockheed spec dwg 670955-101) (see sep pub. whn avail.)	REF	
-41	107147A1	B. .	TUNING DRIVE, (E134) AIM-7G (A1615) (Alternate to 265577) (see AA.11-128577A1-4) (Lockheed spec dwg 670956-101)	2	
	265577	B. .	TUNING DRIVE, (E134) AIM-7G (49956) (Alternate to 107147A1) (Lockheed spec dwg 670956-101) (see sep pub. whn avail.)	REF	
-42	107155A1	B. .	RACK, tuning drive AIM-7E (A1615) (Alternate to 274191) (see AA.11-128577A1-4) (Lockheed spec dwg 740415-101)	1	
	274191	B. .	RACK, tuning drive AIM-7E (49956) (Lockheed spec dwg 740415-101) (Alternate to 107155A1) (see sep pub. whn avail.)	REF	

Figura e particolare	NDR	1 2 3 4 5 6 7 DENOMINAZIONE	Quant.	Codice applicab.
		Attaching Parts		
184	NAS514P832-18	B. . SCREW (80205)	8	
	NAS602-8	B. . SCREW (80205)	8	
	MS21042L08	B. . NUT (96906)	16	
		*		
-43	850892-101	B. . DECAL, fire control relay unit	1	
-44	850893-101	B. . DECAL, tuning drives	1	
	799006-101	A. HARNESS ASSY, gun control relay box *(see fig. 185 for reqd)*	REF	
-45	EMRA20PM1A106	A. . CONNECTOR, (P160) plug (P-137 disc.) (81312)	1	
-46	MS25183-10SL3S	A. . CONNECTOR, (P5) plug (T-12 gun feeder) (96906)	1	
-47	MS25183-12S4S	A. . CONNECTOR, (P96) plug (gun firing ignition) (96906)	1	
-48	1-672-1	. CONNECTOR, (P95) plug (95712) *(see fig. 98 for reqd)*	REF	
-49	1-690-1	. CONNECTOR, (P94) plug (95712) *(see fig. 98 for reqd)*	REF	

A - Only for FB
B - Only for AWX
C - Only for AWX - Reqd per AA.1F-104-OT-797

Figura e particolare	NDR	1 2 3 4 5 6 7 DENOMINAZIONE	Quant.	Codice applicab.
		GUN COMPARTMENT ELECTRICAL		
185	798566-101	A. ELECTRICAL INSTL, gun compartment (LH only) *(see fig. 30 for reqd)*	REF	
-1	1485	A. . POWER SUPPLY, (A14) gun firing (96182) (Lockheed spec dwg 617238-1)	1	
-2	798558-101	A. . BRACKET ASSY, gun power supply	1	
-3	798557-101	A. . COVER ASSY, gun power supply	1	
		Attaching Parts		
-4	AN515-8R8	A. . SCREW (88044)	2	
-5	146-104	A. . SOCKET, octal tube (02660)	1	
		Attaching Parts		
-6	AN515-6R18	A. . SCREW (88044)	2	
-7	NAS43DD1-6	A. . SPACER (80205)	1	
-8	763809	A. . INSULATOR, gun compartment electrical	1	
-9	788471-1	A. . DECAL, gunfire power supply	1	
-10	AN520-10R12	A. . SCREW (grd stud) (88044)	1	
	AN936A10	A. . WASHER (grd stud) (88044)	1	
	AN935-10L	A. . WASHER (grd stud) (88044)	1	
	AN345-10	A. . NUT (grd stud) (88044)	1	
	AN960D10	A. . WASHER (grd stud) (88044)	1	
	MS21042L3	A. . NUT (grd stud) (96906)	1	
	798565-101	A. . EQUIPMENT ASSY, gun control box	1	
		Attaching Parts		
	NAS623-3-6	A. . SCREW (80205)	4	
-11	798564-101	A. . . BOX ASSY, outer gun control	1	
-12	798562-101	A. . . BOX ASSY, inner gun control	1	
	798561-101	A. . . COVER ASSY, gun control box	1	
-13	798561-103	A. . . . COVER, gun control box	1	
		Attaching Parts		
-14	AN255-10	A. . . . SCREW (88044)	4	
-15	AN960D10	A. . . . WASHER (88044)	4	
-16	799294-101	A. . . . DECAL, gun control	1	
-17	785-1-4	A. . . CLAMP, loop cushioned (83930)	1	
		Attaching Parts		
-18	NAS1096-3-6	A. . . SCREW (80205)	1	
-19	AN960D10	A. . . WASHER (88044)	1	
-20	MS21042L3	A. . . NUT (96906)	1	
-21	FA6025	A. . . CAPACITOR, (C2) electrical (81831)	1	
-22	CP07SB3	A. . . BRACKET, capacitor (81831)	2	
		Attaching Parts		
	MS21042L3	A. . . NUT (96906)	1	
	AN960D10	A. . . WASHER (88044)	1	
-23	T253-1	A. . . TIMER, (K24) delay drop-out interval (72152) (Lockheed spec dwg 613608-3) (intchg wth TD401-1-5S)	1	
	TD401-1-5S	A. . . TIMER, (K24) delay drop-out interval (96261) (Lockheed spec dwg 613608-3) (intchg wth T253)	REF	
		Attaching Parts		
	AN960D6	A. . . WASHER (88044)	4	
	MS21042L06	A. . . NUT (96906)	4	
-24	T296-1	A. . . TIMER, (K22) .5 sec drop-out (72152) (Lockheed spec dwg 619321-3) (intchg wth TD400-500M)	1	
	TD400-500M	A. . . TIMER, (K22) .5 sec drop-out (96261) (Lockheed spec dwg 619321-3) (intchg wth T296-1)	REF	

Fuselage Electrical and Electronics

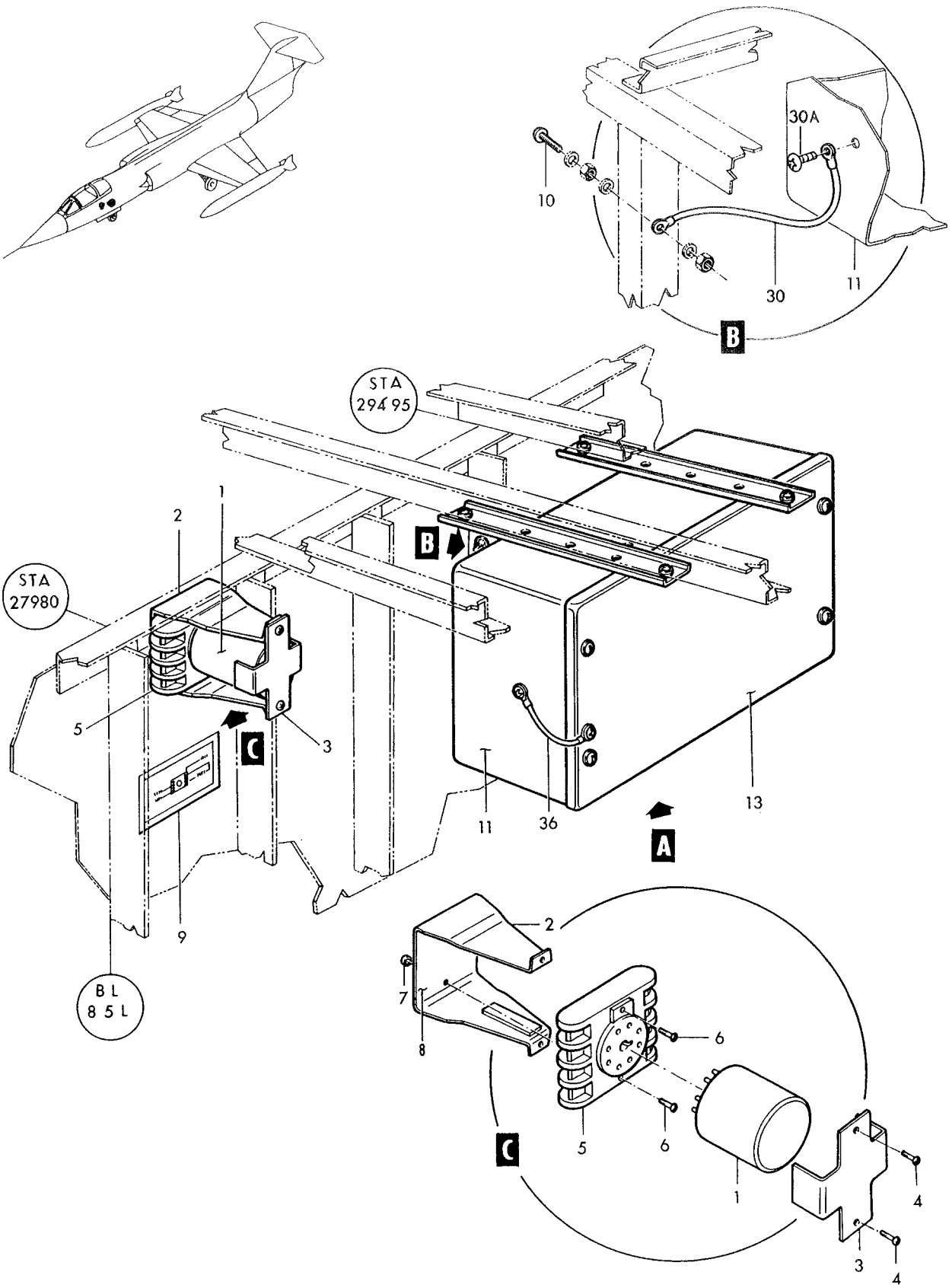

Figure 185–Gun Compartment Electrical (Sheet 1 of 2)

Fuselage Electrical and Electronics

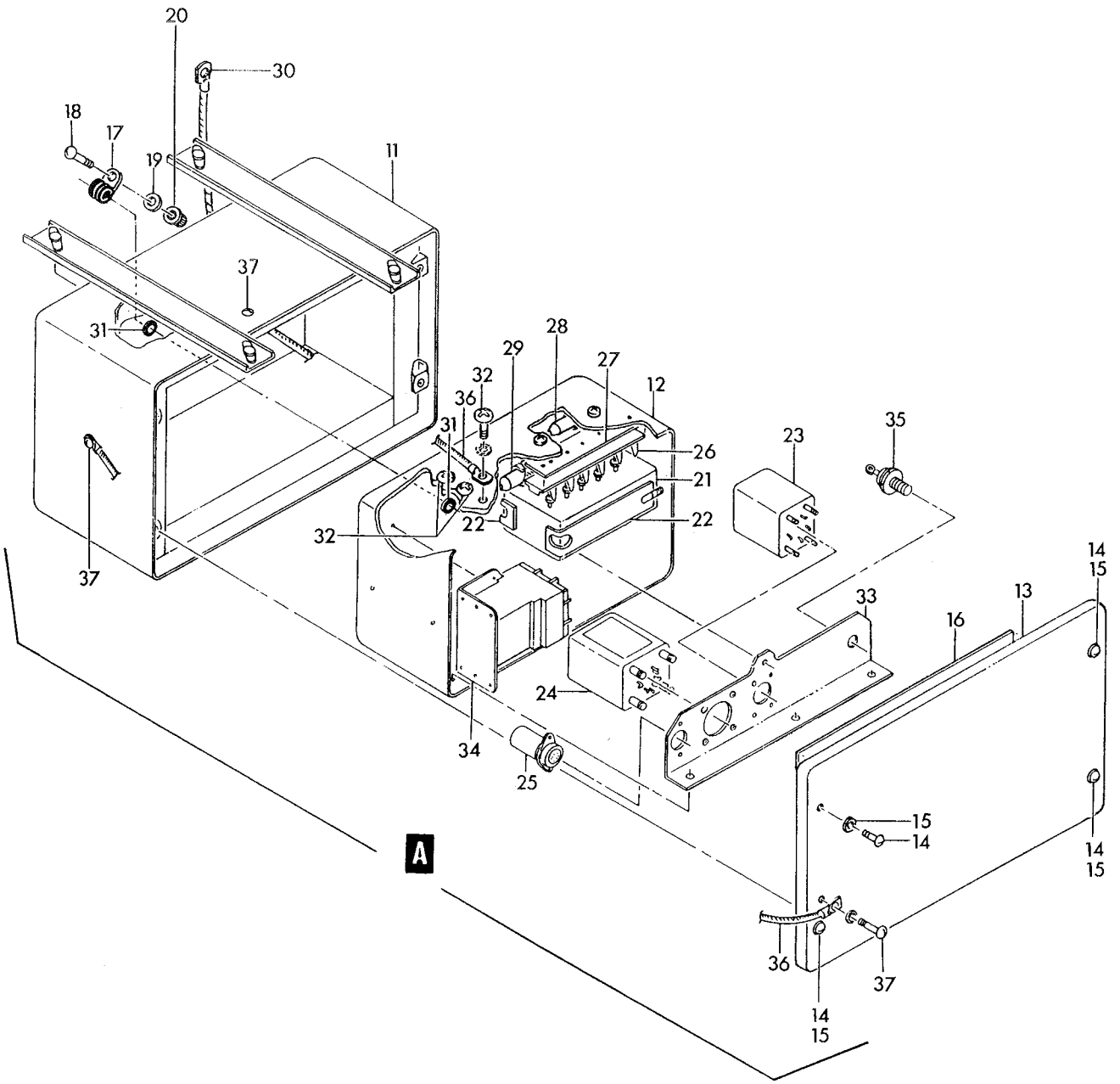

P:6-16-19

Figure 185— Gun Compartment Electrical (Sheet 2 of 2)

Figura e particolare	NDR	1 2 3 4 5 6 7	DENOMINAZIONE	Quant.	Codice applicab.
			Attaching Parts		
185	AN960D6	A.	WASHER (88044)	4	
	MS21042L06	A.	NUT (96906)	4	
-25	MHX2128	A.	RELAY, (K23) DPDT armature (70309) (lockheed spec dwg 613510-1)	1	
			Attaching Parts		
	AN515-4R6	A.	SCREW (88044)	2	
	MS21042L04	A.	NUT (96906)	2	
-26	LS1904-2	A.	TERMINAL BLOCK ASSY, electrical (36659)	1	
			Attaching Parts		
	AN515-4R6	A.	SCREW (88044)	2	
	AN960D4	A.	WASHER (88044)	2	
	MS21042L04	A.	NUT (96906)	2	
-27	AN3437-1-6	A.	STRIP (88044)	1	
-28	RW56G500	A.	RESISTOR, (R5) 50 Ohm 10 watt (44655)	1	
-29	RW56G501	A.	RESISTOR, (R4) 500 Ohm 10 watt (44655)	1	
-30	MS25083-1BB7	A.	JUMPER (96906)	1	
			Attaching Parts		
-30A	AN520-10R8	A.	SCREW (88044)	1	
	AN960-10L	A.	WASHER (88044)	1	6741-
	MS21042L3	A.	NUT (96906)	1	
-31	295957-10A	A.	GROMMET, nylon (61864)	2	
-32	NAS1096-3-12	A.	SCREW (grd stud) (80205)	3	
	AN936A10	A.	WASHER (grd stud) (88044)	3	
	AN935-10L	A.	WASHER (grd stud) (88044)	3	
	AN345-10	A.	NUT (grd stud) (88044)	3	
	AN960D10	A.	WASHER (grd stud) (88044)	3	
	MS21042L3	A.	NUT (grd stud) (96906)	1	
	799006-101	A.	HARNESS ASSY, gun control relay box *(see fig. 184)*	1	
-33	798559-101	A.	BRACKET, gun control box	1	
			Attaching Parts		
	NAS1096-3-6	A.	SCREW (80205)	3	
	AN960D10	A.	WASHER (88044)	3	
-34	MS24149D1	A.	RELAY, (K26) (96906)	1	
			Attaching Parts		
	AN515-6R6	A.	SCREW (88044)	2	
	AN960D6	A.	WASHER (88044)	2	
-35	CK776	A.	RECTIFIER, (CR2) diode blocking (49956) (Lockheed spec dwg 613580-1) (intchg wth 1N250 and 1N250B)	1	
	1N250	A.	RECTIFIER, (CR2) diode blocking (81349) (Lockheed spec dwg 613580-1) (intchg wth CK776 and 1N250B)	REF	
	1N250B	A.	RECTIFIER, (CR2) diode blocking (04713) (spares replacement for CK776 and 1N250)	REF	
-36	MS25083-1BB3	A.	JUMPER (96906)	2	
			Attaching Parts		
-37	AN520-10R8	A.	SCREW (88044)	3	
	MS21042L3	A.	NUT (96906)	3	

A - Only for FB

Figura e particolare	NDR	DENOMINAZIONE	Quant.	Codice applicab.
		WING FILLETS ELECTRICAL		
186	849916-101	ELECTRICAL INSTL, LH wing fillet wiring and equipment *(see fig. 192 for reqd)*	REF	
	849970-101	RELAY INSTL, LH wing fillet	1	
	849970-103	RELAY ASSY, LH wing fillet	1	
		Attaching Parts		
	AN520-10R8	SCREW (88044)	4	
		*		
- 1	RG12D13	RELAY ASSY, (E3) tip and pylon tanks fuel indicator transfer (A0019) (94580) (Lockheed spec dwg 613692-1) (see T.O.8R3-73-12)	1	
		Attaching Parts		
	AN515-6R6	SCREW (88044)	4	
		*		
- 2	MS24149D1	RELAY, (K26) (96906)	1	
		Attaching Parts		
	AN515-8R8	SCREW (88044)	2	
- 3	NAS1096-3-12	SCREW (grd stud) (80205)	3	
		*		
	AN936A10	WASHER (grd stud) (88044)	3	
	AN935-10L	WASHER (grd stud) (88044)	3	
	AN345-10	NUT (grd stud) (88044)	3	
	AN960-10	WASHER (grd stud) (88044)	3	
	MS21042L3	NUT (grd stud) (96906)	3	
	850315-101	RELAY ASSY, LH wing fillet	1	
		Attaching Parts		
	AN515-8R6	SCREW (88044)	4	
		*		
- 4	9302-5964A	RELAY, (K2) DPDT 10 Amp miniature (A0304) (35344) (Lockheed spec dwg 613683-1) (intchg wth AH23CN460AB)	3	
	AH23CN460AB	RELAY, (K2) DPDT 10 Amp miniature (72152) (Lockheed spec dwg 613683-1) (intchg wth 9302-5964A)	REF	
		Attaching Parts		
	AN960D4	WASHER (88044)	4	
	MS35338-40	WASHER (96906)	4	
	MS20341-4S	NUT (96906)	4	
		*		
- 5	847756-101	BRACKET ASSY, LH wing fillet relay	1	
- 6	847758-101	DECAL, RH tip store jettison relay	1	
- 7	847759-101	DECAL, LH tip store jettison relay	1	
- 8	847760-101	DECAL, tip tank jettison relay	1	
	849508-101	HARNESS ASSY, jettison relays	1	
- 9	EMRA14PF2A116	CONNECTOR, (J20) receptacle (P-142 jettison relay panel) (81312)	1	
-10	849971-101	PANEL ASSY, LH wing fillet relay	1	
-11	784755-1	DECAL, fuel indicator transfer relay	1	
-12	784757-1	DECAL, LE flap takeoff control relay	1	
-13	849972-101	DECAL, jettison relay	1	
-14	786805-1	DECAL, LE flap control relay LH fillet area	1	
-15	5070-1	RECEPTACLE, (J87) bhd feed thru (95712)	2	
-16	NAS1096-3-12	SCREW (grd stud) (80205)	1	
	AN936A10	WASHER (grd stud) (88044)	1	
	MS35337-43	WASHER (grd stud) (96906)	1	
	AN345-10	NUT (grd stud) (88044)	1	
	AN960-10	WASHER (grd stud) (88044)	1	
	MS21042L3	NUT (grd stud) (96906)	1	
	852141-101	HARNESS ASSY, LH wing fillet assembly	1	
	849605-101	HARNESS ASSY, P-170 plug to LH wing fillet	1	
-17	165-26-1000	CONNECTOR, (P68) plug (transfer relay box) (02660)	1	
-17A	EMRA42PM1A106	CONNECTOR, (P57) plug (P-170 disc.) (81312)	1	
-18	1-670-1	CONNECTOR, (P92) plug (pylon and tip tank probe lines) (pylon and tip tank quantity) (95712)	4	
	850146-103	BRACKET INSTL, wing fillet electrical connector	1	

Fuselage Electrical and Electronics

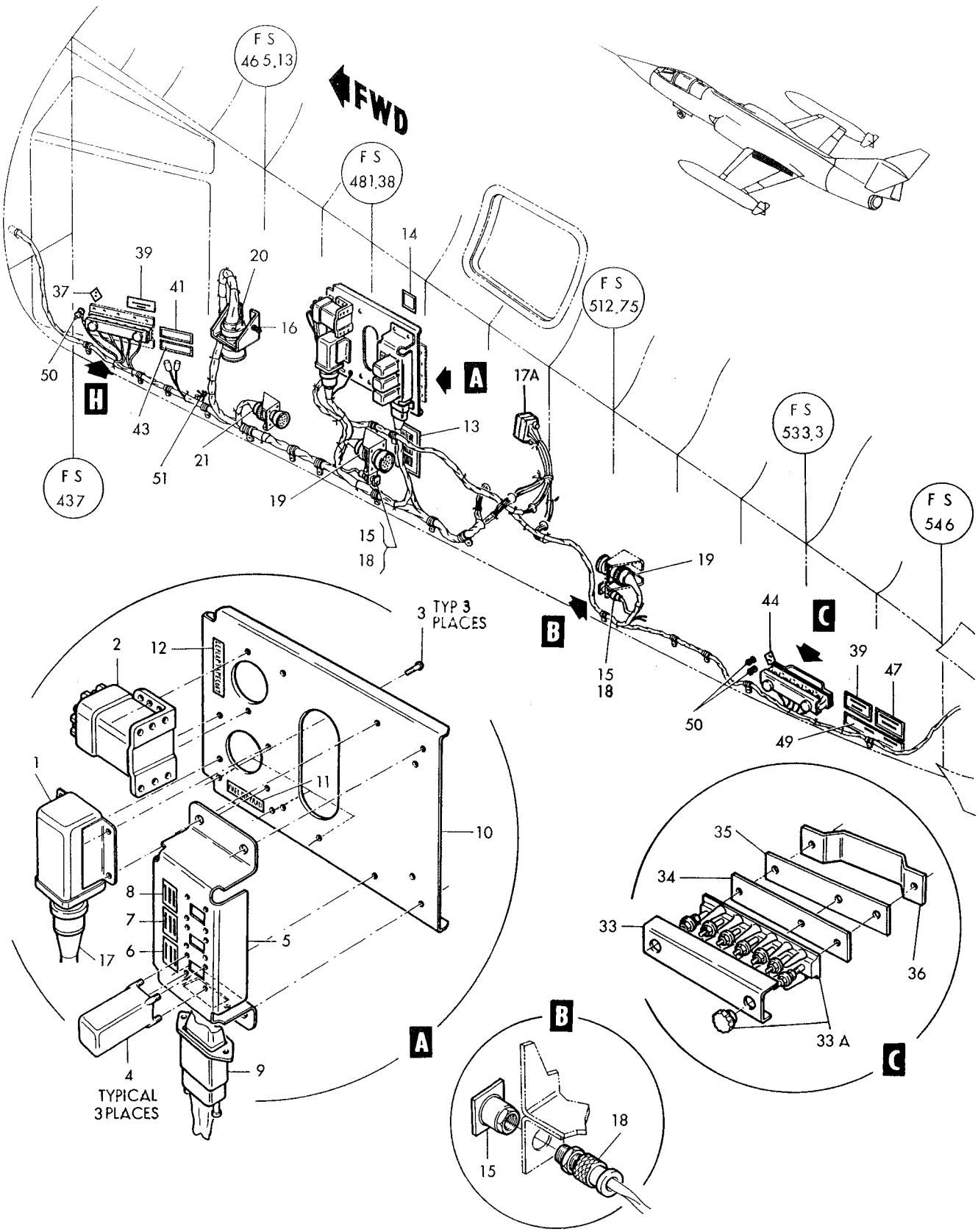

Figure 186–Wing Fillets Electrical (Sheet 1 of 2)

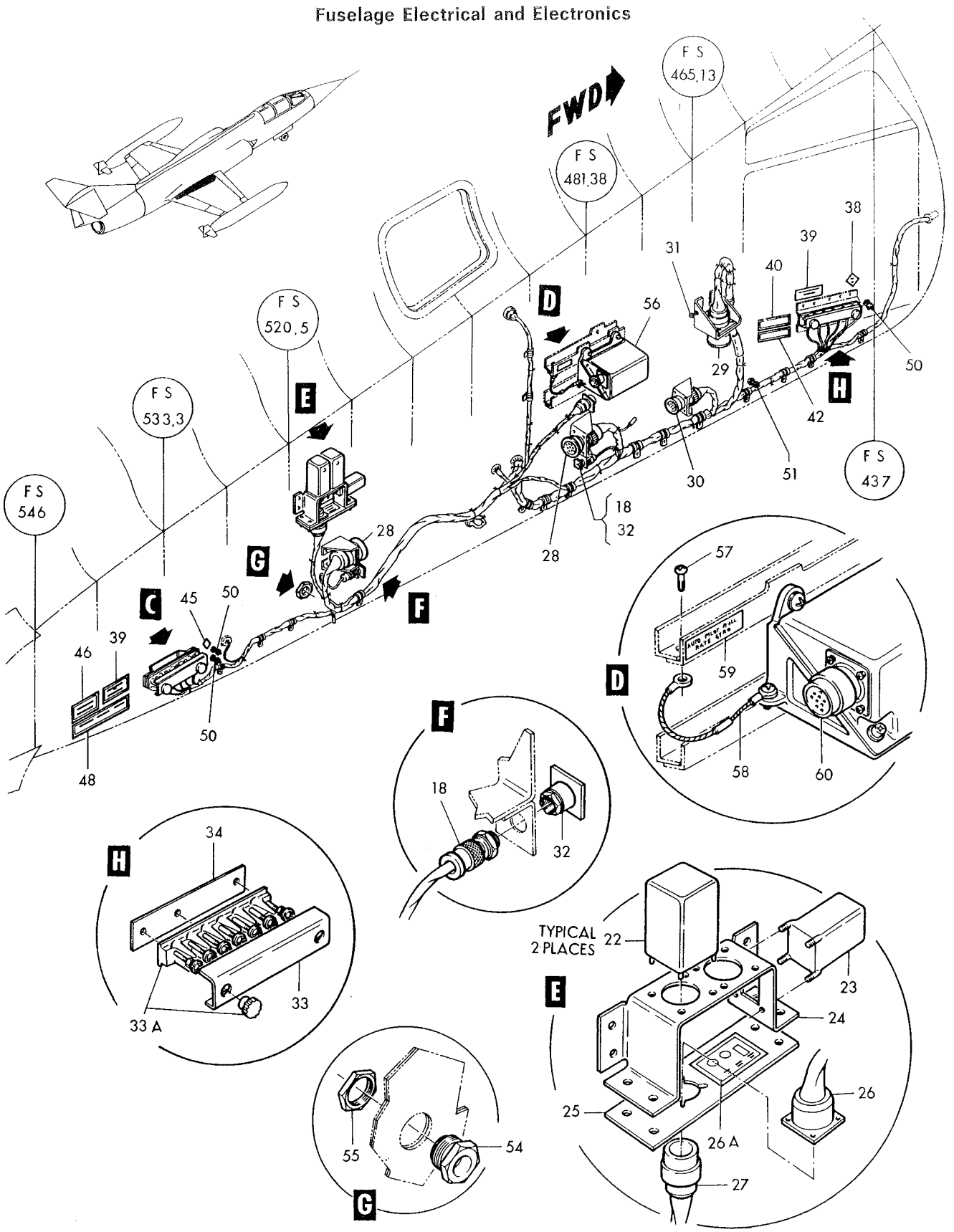

Figure 186-Wing Fillets Electrical (Sheet 2 of 2)

Figura e particolare	NDR	1 2 3 4 5 6 7 DENOMINAZIONE	Quant.	Codice applicab.
186-19	CA00KE28-21S	. . . CONNECTOR, (J60) recp (P-5 and P-6 disc.) (71468)	2	
-20	CA00KE36-10S	. . . CONNECTOR, (J294) recp (P-162 disc.) (71468)	1	
-21	CA00KE20-27S	. . . CONNECTOR, (J61) recp (P-4 disc.) (71468)	1	
	849916-103	. ELECTRICAL INSTL, RH wing fillet wiring and equipment *(see fig. 194 for reqd)*	REF	
	851423-101	. . RELAY BRACKET ASSY, stores jettison sys pylon	1	
		Attaching Parts		
	NAS603-8	. . SCREW (80205)	4	
-22	T369	. . . TIMER, (K5) .75 second delay pull-in (72152) (Lockheed spec dwg 619313-1) (intchg wth TD404-750M)	2	
	TD404-750M	. . . TIMER, (K5) .75 second delay pull-in (35344) (Lockheed spec dwg 619313-1) (intchg wth T369)	REF	
		Attaching Parts		
	AN960D6	. . . WASHER (88044)	4	
	MS35338-41	. . . WASHER (96906)	4	
	MS20341-6S	. . . NUT (96906)	4	
-23	9302-5964A	. . . RELAY, (K2) DPDT 10 Amp miniature (A0304) (35344) (Lockheed spec dwg 613683-1) (intchg wth AH23CN460AB)	1	
	AH23CN460AB	. . . RELAY, (K2) DPDT 10 Amp miniature (72152) (Lockheed spec dwg 613683-1) (intchg wth 9302-5964A)	REF	
		Attaching Parts		
	AN960D4	. . . WASHER (88044)	4	
	MS35338-40	. . . WASHER (96906)	4	
	MS20341-4S	. . . NUT (96906)	4	
-24	851421-101	. . . BRACKET, stores jettison sys pylon	1	
		Attaching Parts		
	NAS603-8	. . . SCREW (88044)	4	
-25	851420-101	. . . COVER PLATE, stores jettison sys pylon	1	
	849830-101	. . . HARNESS ASSY, P-164 recp to iettison delay panel	1	
-26	MS3110P16-8P	. . . . CONNECTOR, (J253) recp (P-164 disc.) (96906)	1	
-26A	851431-101	. . . CHART WIRING, stores jettison sys pylon	1	
	849831-101	. . HARNESS ASSY, P-164 plug to wing fillet splices	1	
-27	MS3116P16-8S	. . . CONNECTOR, (P1) plug (P-164 disc.) (96906)	1	
	850146-104	. . BRACKET INSTL, wing fillet electrical connector	1	
-28	CA00KE28-21S	. . . CONNECTOR, (J60) recp (P-8 and P-9 disc.) (71468)	2	
-29	CA00KE36-10S	. . . CONNECTOR, (J294) recp (P-161 disc.) (71468)	1	
-30	CA00KE20-27S	. . . CONNECTOR, (J61) recp (P-7 disc.) (71468)	1	
-31	NAS1096-3-12	. . SCREW (grd stud) (80205)	1	
	AN936A10	. . WASHER (grd stud) (88044)	1	
	MS35337-43	. . WASHER (grd stud) (96906)	1	
	AN345-10	. . NUT (grd stud) (88044)	1	
	AN960-10	. . WASHER (grd stud) (88044)	1	
	MS21042L3	. . NUT (grd stud) (96906)	1	
-32	5070-1	. . RECEPTACLE, (J87) bhd feed thru (95712)	2	
	849783-101	. . HARNESS ASSY, RH wing fillet assembly	1	
	849576-101	. . . HARNESS ASSY, RH wing fillet to ammunition compartment *(see fig. 189)*	1	
	851486-101	. TERMINAL BLOCK INSTL, flap actuator (LH) *(see fig. 192 for reqd)*	REF	
	851486-102	. TERMINAL BLOCK INSTL, flap actuator (RH) *(see fig. 194 for reqd)*	REF	
-33	LS3851-4-5	. . SHIELD ASSY, terminal block (36659)	2	
-33A	LS1944-2	. . TERMINAL BLOCK ASSY, electrical (36659)	2	
		Attaching Parts		
	NAS600-8	. . SCREW (80205)	3	
	MS21042L04	. . NUT (96906)	1	
-34	LS4999B1-5	. . STRIP, terminal block insulating (36659)	2	
-35	851496-101	. . STRIP, landing flap actuator	1	6721

Figura e particolare	NDR	1	2	3	4	5	6	7	DENOMINAZIONE	Quant.	Codice applicab.
186-36	851497-101								BRACKET, landing flap terminal strip	1	
-37	LS4998TB20								DECAL, terminal block identification (LH) (36659)	1	
-38	LS4998TB19								DECAL, terminal block identification (RH) (36659)	1	
-39	764534								DECAL, warning high voltage	2	
-40	851491-101								DECAL, LE flap actuator (RH)	1	
-41	851493-101								DECAL, LE flap actuator (LH)	1	
-42	851492-101								DECAL, LE flap actuator (RH)	1	
-43	851494-101								DECAL, LE flap actuator (LH)	1	
-44	LS4998TB18								DECAL, terminal block identification (LH) (36659)	1	
-45	LS4998TB17								DECAL, terminal block identification (RH) (36659)	1	
-46	851488-101								DECAL, landing flap actuator (RH)	1	
-47	851490-101								DECAL, landing flap actuator (LH)	1	
-48	851487-101								DECAL, landing flap actuator (RH)	1	
-49	851489-101								DECAL, landing flap actuator (LH)	1	
-50	NAS1096-3-12								SCREW (grd stud) (80205)	3	
-51	NAS1096-3-16								SCREW (grd stud) (80205)	1	
	AN936A10								WASHER (grd stud) (88044)	4	
	MS35337-43								WASHER (grd stud) (96906)	4	
	AN345-10								NUT (grd stud) (88044)	4	
	AN960-10								WASHER (grd stud) (88044)	4	
	MS21042L3								NUT (grd stud) (96906)	4	
-54	AN3064-16								ADAPTER (88044) (RH)	1	
-55	AN3066-16								NUT (88044) (RH)	1	
	784215-1								EQUIPMENT INSTL, RH wing fillet rull rate gyro electronic (NHA 783052-1)	1	
-56	GG127B2								GYRO GROUP, (MP2) roll rate (A0019) (94580) (Lockheed spec dwg 620676-5) (see T.O. 5A11-2-43-4)	1	
									Attaching Parts		
	NAS623-3-5								SCREW (80205)	3	
	AN960D10								WASHER (88044)	3	
									*		
-57	AN520-10R14								SCREW (grd stud) (88044)	1	
	AN936A10								WASHER (grd stud) (88044)	1	
	AN935-10L								WASHER (grd stud) (88044)	1	
	AN345-10								NUT (grd stud) (88044)	1	
-58	MS25083-2BB4								JUMPER (96906)	1	
	AN960D10								WASHER (grd stud) (88044)	1	
	MS21042L3								NUT (grd stud) (96906)	1	
	AN520-10R8								SCREW (88044)	1	
	AN960D10								WASHER (88044)	1	
	MS21042L3								NUT (96906)	1	
	784215-3								SUPPORT INSTL, roll rate gyro electronic equipment (RH only) *(see fig. 41 for reqd)*	REF	
	785857-1								BRACKET ASSY, roll rate gyro upper	1	
-59	784216-1								DECAL, roll rate gyro	1	
	849589-101								HARNESS ASSY, automatic pitch control junction box to RH fillet *(see fig. 194 for reqd)*	REF	
-60	PT06P14-18S								CONNECTOR, (P128) plug (roll rate gyro) (77820)	1	

Figura e particolare	NDR	DENOMINAZIONE 1 2 3 4 5 6 7	Quant.	Codice applicab.
		NOSE WHEEL WELL ELECTRICAL		
187	849910-101	. ELECTRICAL INSTL, nose wheel well (NHA 849141-101)	1	
	849657-101	. . HARNESS ASSY, nose wheel well disc. *(see fig. 116)*	1	
- 1	MS25183-22-14P	. . . CONNECTOR, (P103) plug (P-13 nose wheel well disc.) (96906)	1	
- 2	MS25183-20-29S	. . . CONNECTOR, (P72) plug (anti-skid control box) (96906)	1	
	773038-1	. . . SWITCH ASSY, NLG downlock	1	
	773039-1	. . . SWITCH ASSY, NLG uplock	1	
- 3	MS21919WDG4	. . . . CLAMP (96906)	1	
		Attaching Parts		
- 4	AN520-10R8	. . . . SCREW (88044)	1	
- 5	MS21042L3	. . . . NUT (96906)	1	
		——————✲——————		
- 6	H6-52-1	. . . . SWITCH, (S51) SPST sensitive (81640) (Lockheed spec dwg 613394-7)	1	
		Attaching Parts		
- 7	NAS220-24	. . . . SCREW (80205)	2	
- 8	AN960D8	. . . . WASHER (88044)	2	
- 9	AN935-8L	. . . . WASHER (88044)	2	
-10	MS21042L08	. . . . NUT (96906)	2	
		——————✲——————		
-11	772939-1	. . . . BRACKET, uplock switch harness support	1	
-12	772939-2	. . . . BRACKET, downlock switch	1	
-13	MS24331-1	. . . SWITCH, (S69) (NLG scissor) (96906)	1	
	785475-1	. . CONTROL BOX INSTL, goodyear anti-skid	1	
-14	9541577	. . . CONTROL BOX ASSY, (E25) goodyear anti-skid (A0210) (73842) (Lockheed spec dwg 662134-1) (see LR8-14404-290-4)	1	
		Attaching Parts		
	NAS623-3-2	. . . SCREW (80205)	4	
		——————✲——————		
-15	NAS1096-3-16	. . SCREW (grd stud) (80205)	2	
	AN936A10	. . WASHER (grd stud) (88044)	2	
	MS35337-43	. . WASHER (grd stud) (96906)	2	
	AN345-10	. . NUT (grd stud) (88044)	2	
	AN960D10	. . WASHER (grd stud) (88044)	2	
	MS21042L3	. . NUT (grd stud) (96906)	2	
-16	D7585	. LIGHT ASSY, (DS19) taxiing (72914) (Lockheed spec dwg 619168) *(see fig. 199 for reqd)*	REF	

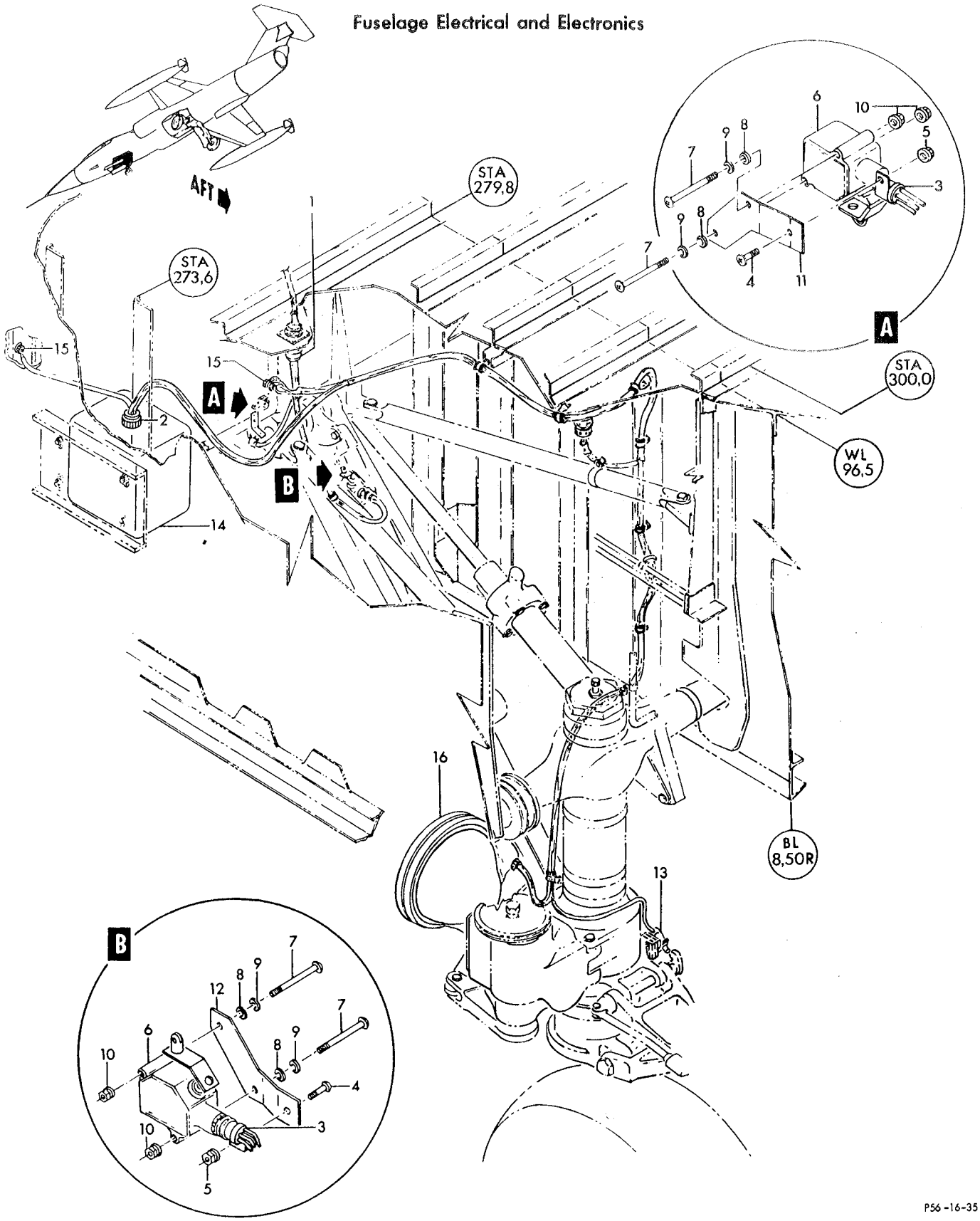

Figure 187—Nose Wheel Well Electrical

Figura e particolare	NDR	DENOMINAZIONE 1 2 3 4 5 6 7	Quant.	Codice applicab.
		MAIN WHEEL WELL ELECTRICAL AND FATIGUE METER		
188	849911-101	ELECTRICAL INSTL, LH door uplock switch *(see fig. 192 for reqd)*	REF	
	849911-103	ELECTRICAL INSTL, RH door uplock switch *(see fig. 194 for reqd)*	REF	
	849604-101	HARNESS ASSY, LH MLG fwd door uplock switch	1	
	849606-101	HARNESS ASSY, LH aft door uplock switch	1	
	849574-101	HARNESS ASSY, RH MLG fwd door uplock switch	1	
	849573-101	HARNESS ASSY, RH MLG aft door uplock switch	1	
- 1	773887-101	SWITCH, (S126) ASSY, LG door uplock (LH)	1	
	773887-102	SWITCH ASSY, (S122) LG door uplock (RH)	1	
		Attaching Parts		
- 2	NAS623-3-24	SCREW (fwd door) (80205)	1	
- 3	NAS623-3-22	SCREW (fwd door) (80205)	1	
	NAS623-3-21	SCREW (aft door) (80205)	2	
	AN960-10L	WASHER (fwd door) (88044)	2	
	MS21042L3	NUT (96906)	4	
		——————✲——————		
- 4	MS21042L3	NUT (96906)	1	
- 5	725684-3	WASHER, LG switch	1	
- 6	773558-1	ARM, MLG door uplock switch (LH)	1	
	773558-2	ARM, MLG door uplock switch (RH)	1	
- 7	80B175	SWITCH, (S122) (S126) DPDT rotary actuator spring return (98816) (Lockheed spec dwg 740045-101)	1	
- 7A	NAS1096-3-12	SCREW (grd stud) (80205)	3	
	AN936A10	WASHER (grd stud) (88044)	3	
	MS35337-43	WASHER (grd stud) (96906)	3	
	AN345-10	NUT (grd stud) (88044)	3	
	AN960D10	WASHER (grd stud) (88044)	3	
	MS21042L3	NUT (grd stud) (96906)	3	
	775640-7	LIGHT INSTL, LH landing *(see fig. 199)*	1	
	775641-9	LIGHT INSTL, RH landing *(see fig. 199)*	1	
- 7B	787817-1	DECAL, main wheel well (RH only)	1	
- 8	773575-1	DECAL, main wheel well (3 reqd for LH and 2 reqd for RH)	AR	
	849911-105	ELECTRICAL INSTL, LH main wheel well *(see fig. 192 for reqd)*	REF	
	849911-107	ELECTRICAL INSTL, RH main wheel well *(see fig. 194 for reqd)*	REF	
	849602-101	HARNESS ASSY, LH MLG *(see fig. 118 and 119)*	1	
	849572-101	HARNESS ASSY, RH MLG *(see fig. 120 and 121)*	1	
-10	MS3103-24-28P	CONNECTOR, (J63) recp (LH) (P-17 disc.) (96906)	1	
-11	MS25183-24-28S	CONNECTOR, (P127) plug (RH) (P-17 disc.) (96906)	1	
-12	773864-503	SWITCH ASSY, (S125) MLG lock (LH)	1	
	773864-504	SWITCH ASSY, (S124) MLG lock (RH)	1	
		Attaching Parts		
	NAS623-3-22	SCREW (80205)	2	
	AN960-10L	WASHER (88044)	2	
	MS21042L3	NUT (96906)	2	
		——————✲——————		
-13	MS21042L3	NUT (96906)	1	
-14	725684-3	WASHER, LG switch	1	
-15	773561-1	LEVER, MLG lock switch (LH)	1	
	773561-2	LEVER, MLG lock switch (RH)	1	
-16	80B180-3	SWITCH, (S124) (S125) DPDT 360 degree rotary actuator (98816) (Lockheed spec dwg 740046-1)	1	
-17	797698-1	SWITCH ASSY, (S139) MLG fwd door down (LH)	1	
	797698-2	SWITCH ASSY, (S140) MLG fwd door down (RH)	1	
		Attaching Parts		
-18	NAS623-3-22	SCREW (80205)	2	
	AN960-10L	WASHER (88044)	2	
		——————✲——————		
-19	MS21042L3	NUT (96906)	1	

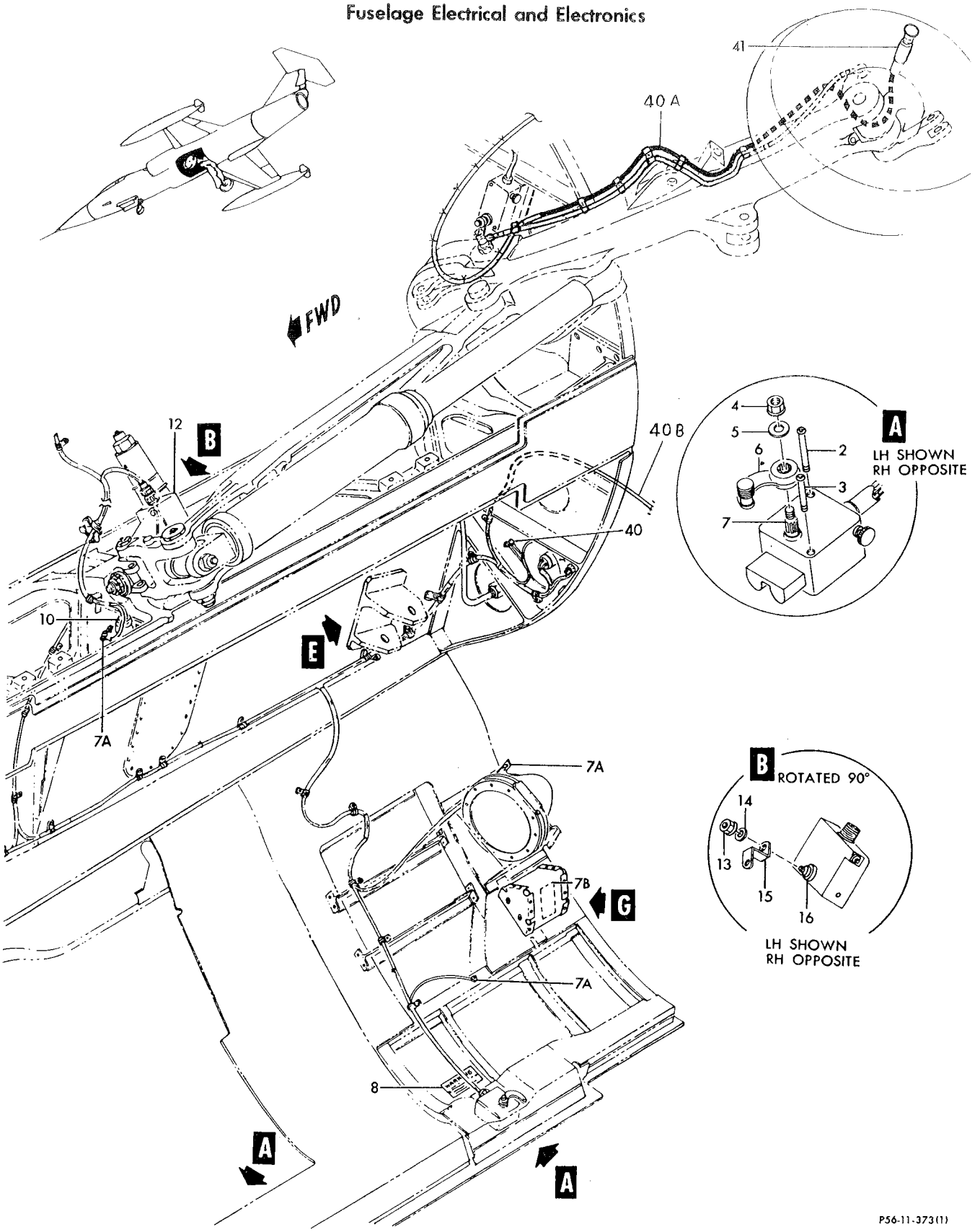

Figure 188—Main Wheel Well Electrical and Fatigue Meter (Sheet 1 of 4)

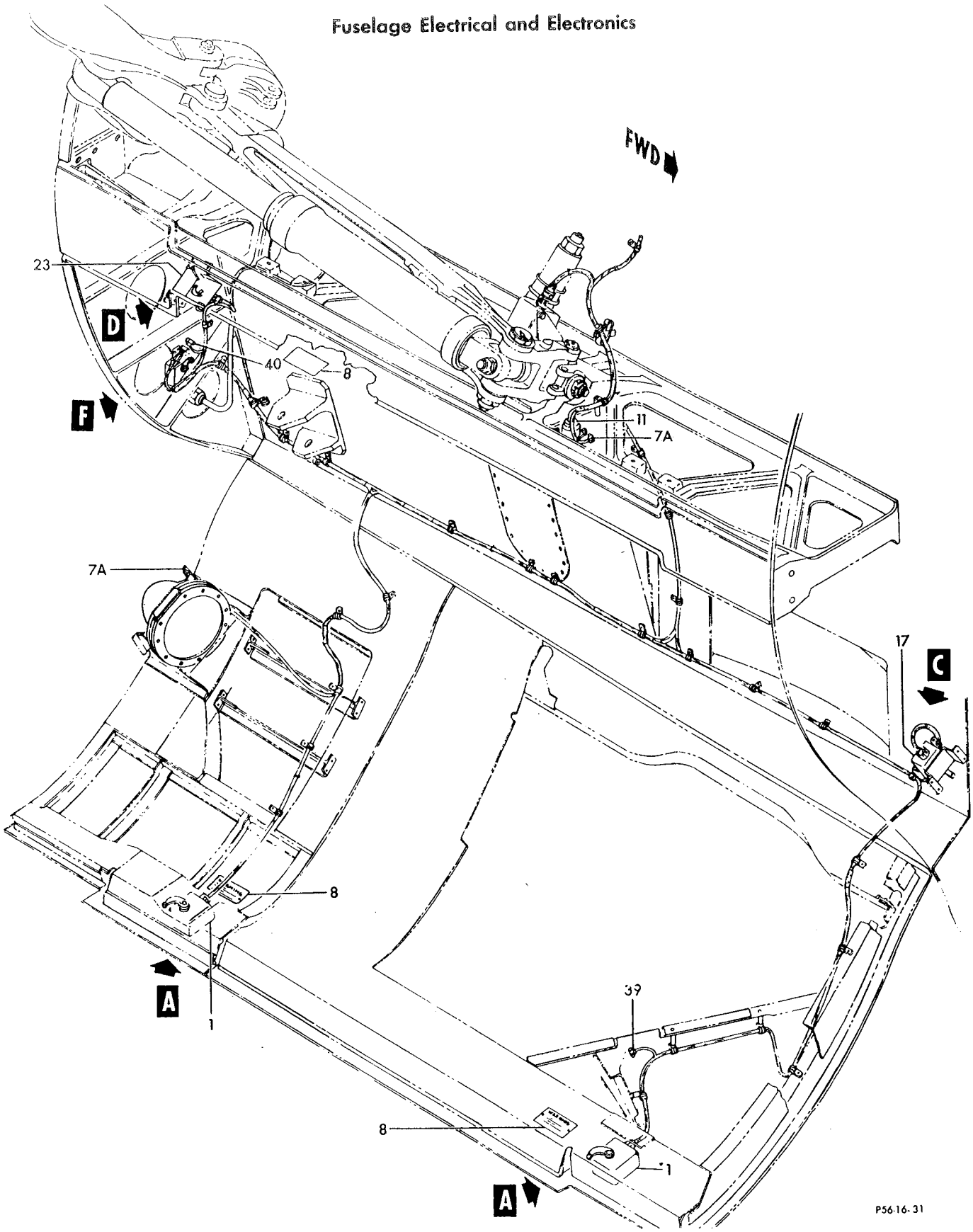

Figure 188 — Main Wheel Well Electrical and Fatigue Meter (Sheet 2 of 4)

Fuselage Electrical and Electronics

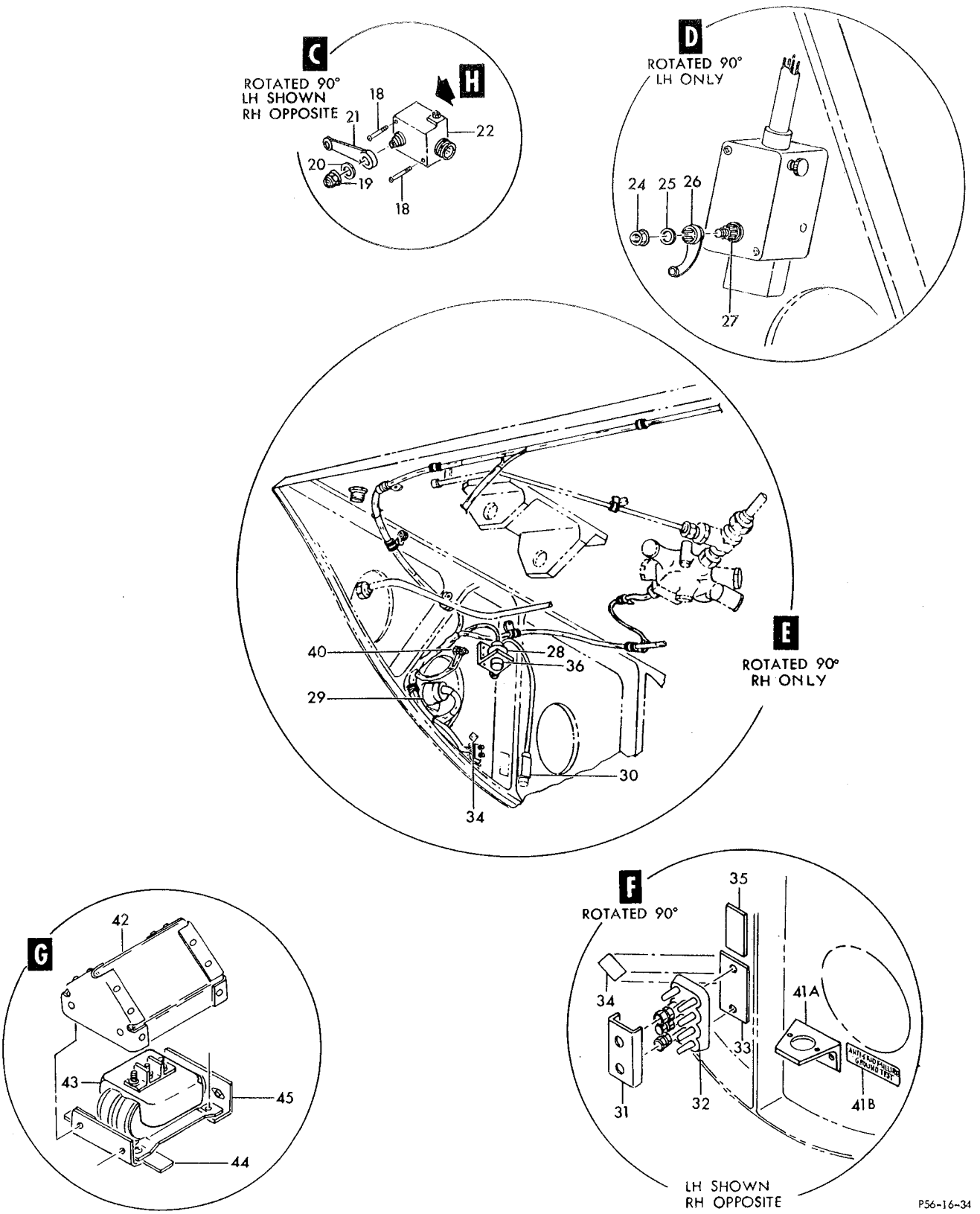

Figure 188— Main Wheel Well Electrical and Fatigue Meter (Sheet 3 of 4)

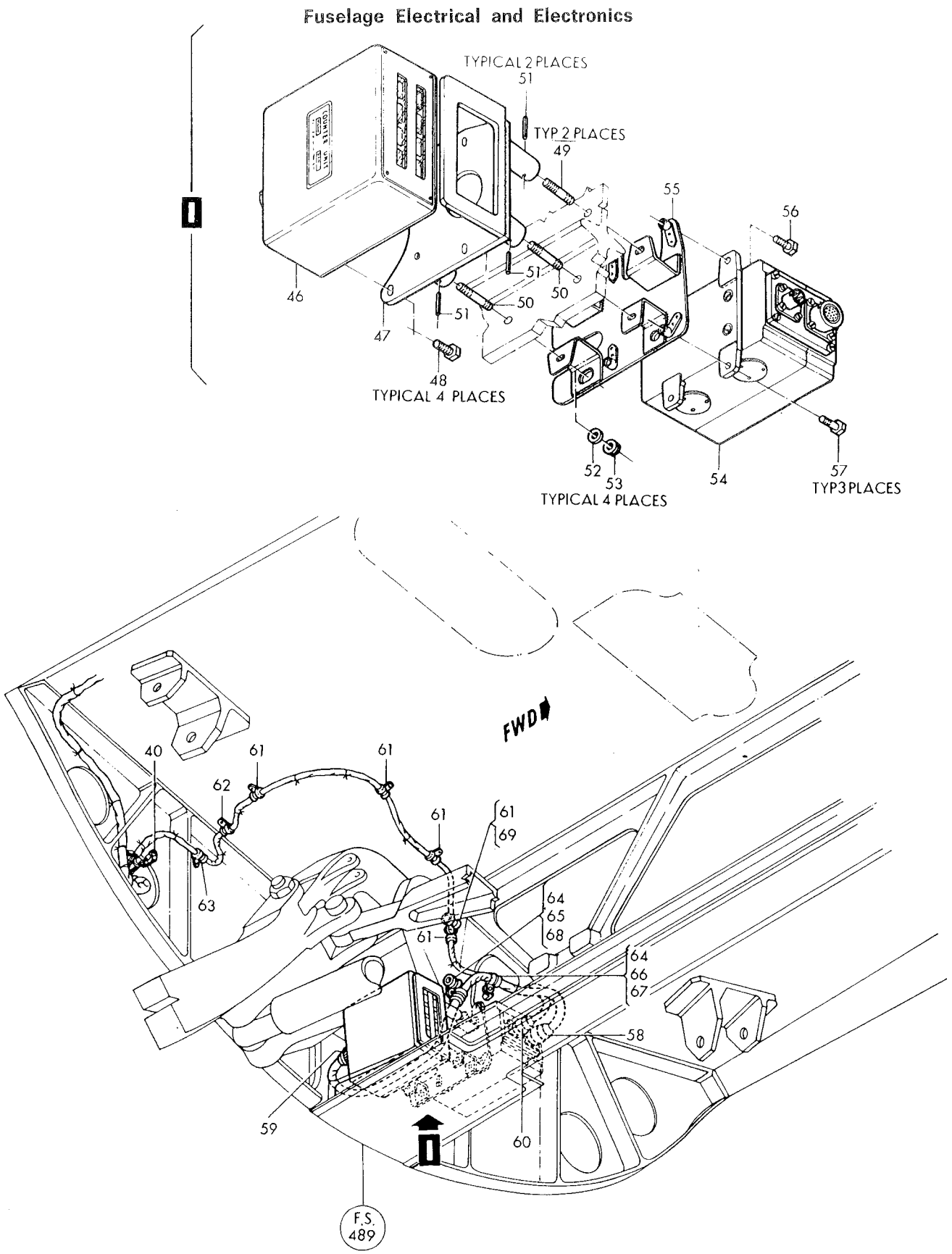

Figure 188-Main Wheel Well Electrical and Fatigue Meter (Sheet 4 of 4)

Figura e particolare	NDR	1	2	3	4	5	6	7	DENOMINAZIONE	Quant.	Codice applicab.
188-20	725684-3								WASHER, LG switch	1	
-21	797697-1								ARM, MLG door switch (LH)	1	
	797697-2								ARM, MLG door switch (RH)	1	
-22	80B180-3								SWITCH, (S139) (S140) DPDT 360 degree rotary actuator (98816) (Lockheed spec dwg 740046-1)	1	
-23	773888-101								SWITCH ASSY, (S176) MLG scissor (LH only)	1	
									Attaching Parts		
	NAS623-3-22								SCREW (80205)	2	
	AN960D10L								WASHER (88044)	2	
	MS21042L3								NUT (96906)	2	
-24	MS21042L3								NUT (96906)	1	
-25	725684-3								WASHER, LG sw	1	
-26	851333-107								ARM ASSY, MLG safety switch	1	
-27	80B175								SWITCH, (S176) DPDT rotary actuator spring return (98816) (Lockheed spec dwg 740045-101)	1	
-28	MS3103-14S7S								CONNECTOR, (J70) recp (RH only) (GRD start) (96906)	1	
-29	MS3103-28-21P								CONNECTOR, (J106) recp (P-10 disc.) (RH only) (96906)	1	
-30	MS24331-1								SWITCH, (S69) (grd test anti-skid) (96906)	1	
-31	LS3850-2-3								SHIELD ASSY, terminal block (36659)	1	
-32	LS1902-2								TERMINAL BLOCK ASSY, electrical (36659)	1	
									Attaching Parts		
	NAS600-8								SCREW (80205)	2	
	MS21042L04								NUT (96906)	2	
-33	LS4999A1-3								STRIP, terminal block insulating and numbering (36659)	1	
-34	LS4998TB16								DECAL, terminal block identification (36659)	1	
	LS4998TB15								DECAL, terminal block identification (36659)	1	
-35	786799-1								DECAL, main wheel well TB16 (LH only)	1	
	786800-1								DECAL, main wheel well TB15 (RH only)	1	
-36	MS25043-14C								DUST CAP (RH only) (96906)	1	
-39	NAS1096-3-12								SCREW (grd stud) (80205)	1	
-40	NAS1096-3-16								SCREW (grd stud) (80205)	1	
	AN936A10								WASHER (grd stud) (88044)	2	
	MS35337-43								WASHER (grd stud) (96906)	2	
	AN345-10								NUT (grd stud) (88044)	2	
	AN960-10								WASHER (grd stud) (88044)	2	
	MS21042L3								NUT (grd stud) (96906)	2	
-40A	849911-109								ELECTRICAL INSTL, anti-skid LH *(see fig. 192 for reqd)*	REF	
-40B	849911-111								ELECTRICAL INSTL, anti-skid RH *(see fig. 194 for reqd)*	REF	
	849603-101	B.							HARNESS ASSY, LH skid detector to terminal block	1	6701-6815
	852238-101	C.							HARNESS ASSY, LH skid detector to terminal block	1	
	849575-101	B.							HARNESS ASSY, RH skid detector to terminal block	1	6701-6815
	852239-101	C.							HARNESS ASSY, RH skid detector to terminal block	1	
-41	PCS06E8-2S	B.							CONNECTOR, (P207) plug (skid detector) (77820)	1	6701-6815
	PCS06P8-2S(SR)	C.							CONNECTOR, (P207) plug (skid detector) (77820)	1	
	798181-101								BRACKET INSTL, main wheel well switch	1	
	798181-102								BRACKET INSTL, main wheel well switch	1	
-41A	788213-1								BRACKET, main wheel well switch	1	
-41B	788217-1								DECAL, anti-skid fail safe grd test	1	
	779413-101								AUTOTRANSFORMER INSTL, landing light *(see fig. 194 for reqd)*	REF	
	777586-1								BOX ASSY, landing light autotransformer	1	
									Attaching Parts		
	AN520-10R6								SCREW (88044)	4	
-42	777586-3								COVER, landing light autotransformer box	1	
-43	C3748								TRANSFORMER, (T6) fixed power (A3051) (alternate to 5810)	1	

Figura e particolare	NDR	1	2	3	4	5	6	7	DENOMINAZIONE	Quant.	Codice applicab.
188	5810								TRANSFORMER, (T6) fixed power (95266) (Lockheed spec dwg 617231-1) (alternate to C3748)	REF	
									Attaching Parts		
	NAS623-3-2								SCREW (80205)	4	
-44	779398-1								BRACKET ASSY, landing light autotransformer	1	6701-6790
	779398-101								BRACKET ASSY, landing light autotransformer	1	6791-
-45	779398-2								BRACKET ASSY, landing light autotransformer	1	6701-6790
	779398-102								BRACKET ASSY, landing light autotransformer	1	6791-
									Attaching Parts		
	NAS623-3-2								SCREW (80205)	2	
	AN960-10								WASHER (88044)	2	
	MS21042L3								NUT (96906)	2	
-46	M2298/B/B	A.							COUNTER, (M2000) (K0095)	1	
-47	FL0855-101	A.							SUPPORT ASSY, counter (A0019)	1	
									Attaching Parts		
-48	NAS1096-3-7	A.							SCREW (80205)	4	
-49	FL0867-101	A.							PIN, threaded (A0019)	2	
-50	FL0867-103	A.							PIN, threaded (A0019)	2	
-51	MS16562-28	A.							PIN (96906)	4	
-52	AN960D10L	A.							WASHER (88044)	4	
-53	MS21042L3	A.							NUT (96906)	4	
-54	M2297/B/B	A.							TRANSDUCER, (A2000) (K0095)	1	
-55	FL0856-101	A.							SUPPORT ASSY, transducer (A0019)	1	
									Attacking Parts		
-56	NAS1096-3-12	A.							SCREW (80205)	1	
-57	NAS1103-6	A.							SCREW (80205)	3	
	AN960D10	A.							WASHER (88044) (If necessary)	AR	
	FL0441-101	A.							HARNESS ASSY (A0019)	1	
-58	MS3116P14-19P	A.							CONNECTOR, (P22) plug (Accelerometer) (96906)	1	
-59	MS3116P14-19S	A.							CONNECTOR, (P137) plug (Counter) (96906)	1	
	FL0441-103	A.							HARNESS ASSY (A0019)	1	
-60	MS3116P10-6S	A.							CONNECTOR, (P100) plug (Accelerometer) (96906)	1	
	FL0441-105	A.							HARNESS ASSY (A0019)	1	
-61	MS21919WDG4	A.							CLAMP (96906)	5	
-62	MS21919WDG5	A.							CLAMP (96906)	1	
-63	MS21919WDG7	A.							CLAMP (96906)	1	
-64	MS21919WDG10	A.							CLAMP (96906)	2	
-65	MS21919WDG11	A.							CLAMP (96906)	1	
-66	AN743B13	A.							BRACKET (88044)	1	
									Attaching Parts		
-67	NAS1096-3-8	A.							SCREW (80205)	1	
-68	NAS1096-3-7	A.							SCREW (80205)	1	
-69	NAS603-8P	A.							SCREW (80205)	1	
	MS21042L3	A.							NUT (96906)	3	

A - Reqd per AA.1F-104-OT-710A
B - Removed per AA.1F-104-OT-762A
C - Reqd per AA.1F-104-OT-762A

Figura e particolare	NDR	1	2	3	4	5	6	7	DENOMINAZIONE	Quant.	Codice applicab.
									FUSELAGE ELECTRICAL FUSELAGE STATION 310 TO 505		
189	849915-101								ELECTRICAL INSTL, fus sta 310 to 505 splices (NHA 849138-101)	1	
- 1	MS90159-30E								ADAPTER, (J148) (P99) (96906)	6	
	785494-1								HARNESS ASSY, bhd 310 to bhd 505 data link antenna lead *(see fig. 193)*	1	6701-6815
	852381-101								HARNESS ASSY, bhd 310 to bhd 505 data link antenna lead *(see fig. 193)*	1	6816-
- 2	UG1185U								CONNECTOR, (P17) plug (bhd 310) (80058)	1	
	Z158		A.						GRIP (04073)	1	
	785495-1								HARNESS ASSY, bhd 310 to bhd 505 IFF/Tacan antenna lead *(see fig. 193)*	1	6701-6815
	852384-101								HARNESS ASSY, bhd 310 to bhd 505 IFF/Tacan antenna lead *(see fig. 193)*	1	6816-
- 3	UG1185U								CONNECTOR, (P17) plug (bhd 310) (80058)	1	
	Z158		A.						GRIP (04073)	1	
- 4	785541-1								GASKET, coaxial cable pressure	3	
- 5	785542-1								PLATE, coaxial cable pressure	3	
									Attaching Parts		
- 6	NAS600-12								SCREW (80205)	4	
- 7	MS21042L04								NUT (96906)	4	
- 8	MS3057-8B								CLAMP (96906)	1	
	AN3066-8								NUT (88044)	1	
	AN3064-8								BOX CONNECTOR (88044)	1	
- 9	AN3063-3								ELBOW (88044)	1	
	AN3066-3								NUT (88044)	2	
	MS3057-3B								CLAMP (96906)	1	
	AN3420-3								BUSHING (88044)	1	
-10	786584-1								DECAL, RH ammution compartment terminal wiring	1	
	849597-101								HARNESS ASSY, top fus light disc. to L-5 splice	1	
-11	MS25183-8S1S								CONNECTOR, (P340) plug (light P-156 disc.) (96906)	1	
-12	728003-1								CONNECTOR, interphone cable pull thru	1	
	AN3066-4								NUT (88044)	1	
	MS3057-4B								CLAMP (96906)	1	
-13	MS3057-12B								CLAMP (96906)	1	
	849565-101								HARNESS ASSY, bhd 339 to bhd 310 intercommunicating	1	
-14	DM9606-7S004								CONNECTOR, (J26) recp (P-78 disc.) (17419)	1	
	849533-101								HARNESS ASSY, fus sta 335 to fus sta 505 coaxial	1	6701-6740
-15	1211-416								CONNECTOR, (P439) plug (fus sta 335 to fus sta 505) (13556)	2	6701-6740
	851071-101								HARNESS ASSY, WL96,5 disc. to bhd 505 signal horn ant.	1	6701-6815
	852391-101								HARNESS ASSY, WL96,5 disc. to bhd 505 signal horn ant.	1	6816-
-16	UG1185A/U								CONNECTOR, (P17) plug (WL96,5 disc. to bhd 505) (80058)	2	
	Z158		A.						GRIP (04073)	2	
	849907-101								ELECTRICAL INSTL, LH fus sta 255 to 358 wiring and equipment *(see fig. 30 for reqd)*	REF	
	783940-101								PANEL INSTL, precheck switches	1	
-17	MS35489-11								GROMMET (96906)	1	
	846099-101								HARNESS ASSY, aerial refueling panel to ammunition compartment	1	
	783940-103								PANEL ASSY, precheck switch	1	
-18	783938-1								PANEL, precheck switch	1	
									Attaching Parts		
	AN501A10-6								SCREW (88044)	4	
	AN936A10								WASHER (88044)	4	
	AN960-10L								WASHER (88044)	4	
-19	783939-1								COVER, precheck switch	2	
-20	22AT1T								SWITCH ASSY, (S55) 8 circuit toggle (91929) (Lockheed spec dwg 613647-1)	1	
-21	MS25306-21								SWITCH, (S16) (external tank refuel selector) (96906)	1	
-22	MS25307-23								SWITCH, (S54) (refuel) (96906)	1	
-23	MS25307-27								SWITCH, (S35) (ammunition, auxiliary and main tank precheck) (96906)	3	
-24	798294-1								DECAL, in flight refueling precheck switches	1	
	850461-103								CONDUIT INSTL, electrical	1	

Fuselage Electrical and Electronics

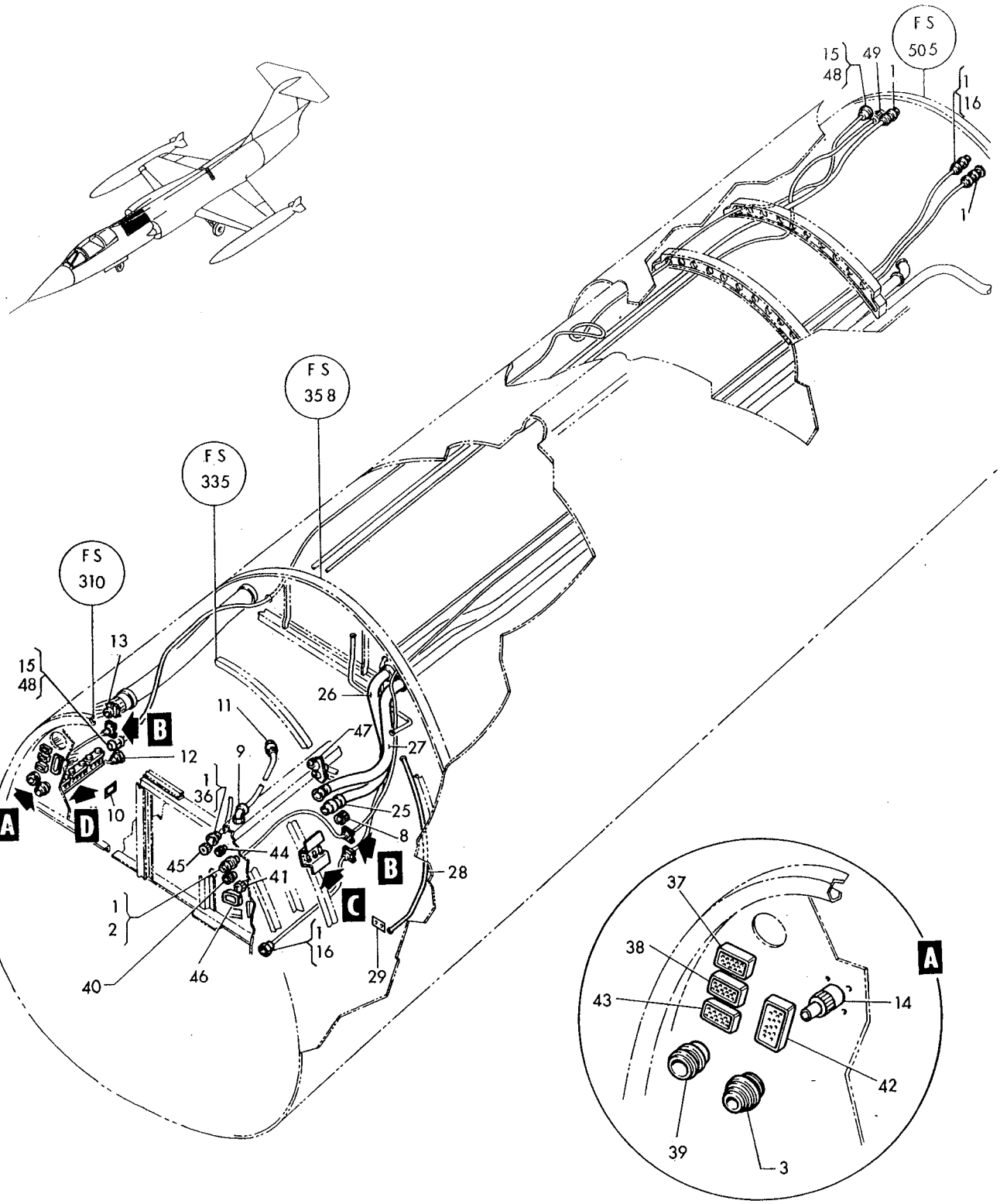

Figure 189–Fuselage Electrical Fuselage Station 310 to 505 (Sheet 1 of 2)

Fuselage Electrical and Electronics

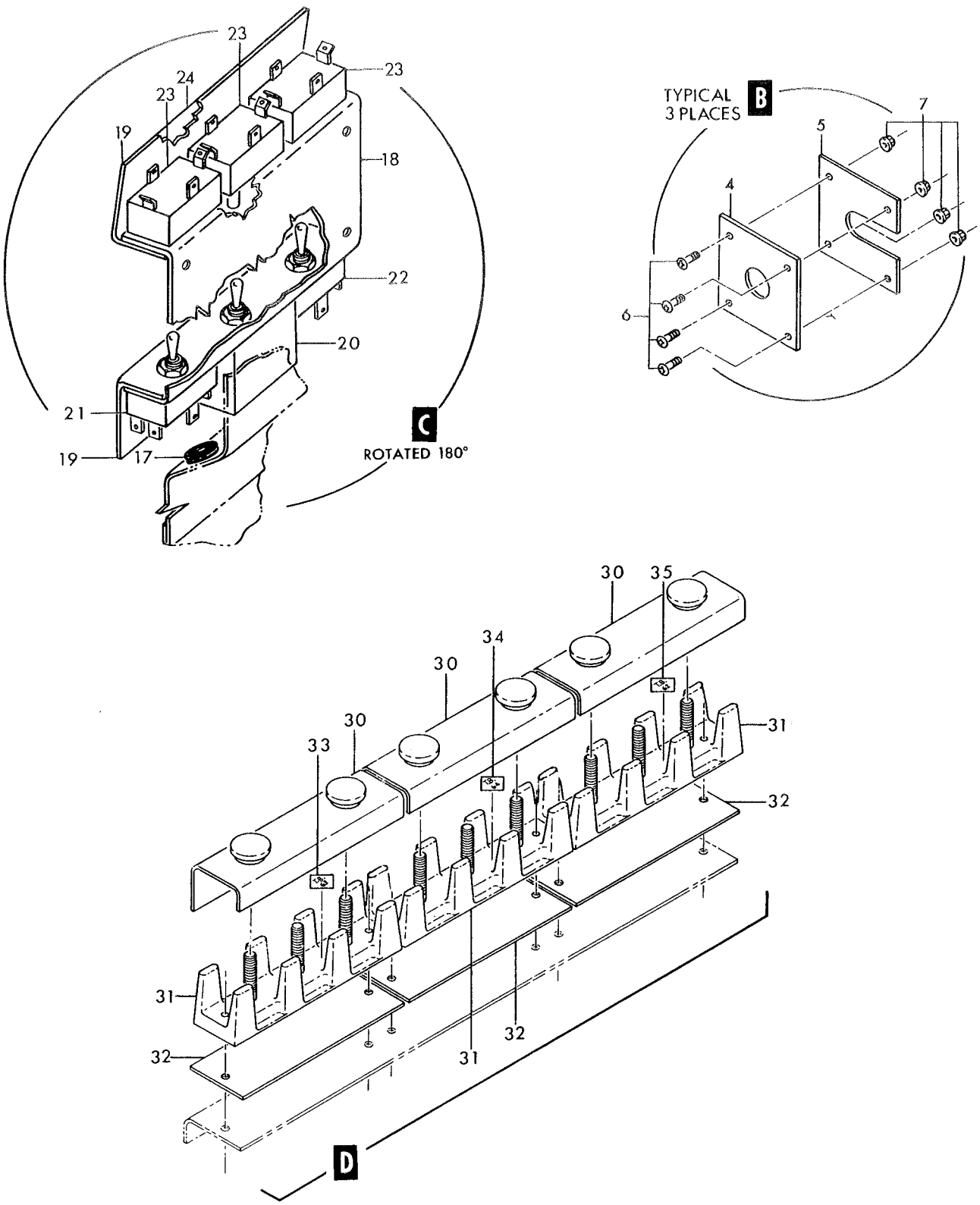

Figure 189—Fuselage Electrical Fuselage Station 310 to 505 (Sheet 2 of 2)

Figura e particolare	NDR	1 2 3 4 5 6 7 DENOMINAZIONE	Quant.	Codice applicab.
189-25	785723-1	NIPPLE ASSY, bhd 335 automatic pitch control conduit	1	
-26	784581-13	CONDUIT, electrical	1	
-27	784581-15	CONDUIT, electrical	1	
	849593-101	HARNESS ASSY, fuel cell area splice to auxiliary tank *(see fig. 100)*	1	
	784375-5	CONDUIT INSTL, inlet anti-icing wiring	1	
-28	784581-21	TUBE, inlet anti-icing wiring	1	
	785350-5	BRACKET INSL, fuel pump	1	
-29	785349-1	BRACKET, fuel pump	1	
		Attaching Parts		
	AN515-8R6	SCREW (88044)	3	
		*		
	764708-101	TUNNEL INSTL, fuselage station 267 to 335 RH control cable *(see fig. 63 for reqd)*	REF	
	776909-1	TERMINAL BLOCK ASSY, RH ammunition compartment	1	
-30	OP358L3	COVER (81872)	3	
-31	LS6456-6-3	TERMINAL BLOCK ASSY, electrical (36659)	3	
		Attaching Parts		
	AN515-6R6	SCREW (88044)	2	
	MS21042L06	NUT (96906)	2	
		*		
-32	LS4999C1-3	STRIP, terminal block insulating and numbering (36659)	3	
-33	LS4998TB63	DECAL, electrical identification (36659)	1	
-34	LS4998TB64	DECAL, electrical identification (36659)	1	
-35	LS4998TB62	DECAL, electrical identification (36659)	1	
	797447-1	HARNESS ASSY, bhd 310 to UHF top antenna *(see fig. 156 for reqd)*	REF	6701-6815
	852378-101	HARNESS ASSY, bhd 310 to UHF top antenna *(see fig. 156 for reqd)*	REF	6816-
-36	45-011	CONNECTOR, (P13) plug (bhd 310) (04073)	1	
	Z158	A. GRIP (04073)	1	
	849545-101	HARNESS ASSY, RH mid fus *(see fig. 194 for reqd)*	REF	6701-6740
	849869-101	HARNESS ASSY, RH mid fus *(see fig. 194 for reqd)*	REF	6741-6815; 6831-
	852302-101	HARNESS ASSY, RH mid fus *(see fig. 194 for reqd)*	REF	6816-6830
-37	EMRA20SM1A106	CONNECTOR, (P75) plug (P-45 disc. bhd 310 RH) (81312)	1	
-38	EMRA20PF2B116G	CONNECTOR, (J184) recp (P-47 disc. bhd 310 RH) (81312)	1	
-39	LS9169-37P	CONNECTOR, (P102) plug (P-46 disc. bhd 310 RH) (36659)	1	
	849554-101	HARNESS ASSY, LH mid fus *(see fig. 192 for reqd)*	REF	6701-6740
	849871-101	HARNESS ASSY, LH mid fus *(see fig. 192 for reqd)*	REF	6741-6815; 6831-
	852298-101	HARNESS ASSY, LH mid fus *(see fig. 192 for reqd)*	REF	6816-6830
-40	DM9700-12PW004	CONNECTOR, (P142)plug (P-123 disc.) (17419)	1	
-41	DM9700-19P004	CONNECTOR, (P212) plug (P-124 disc.) (17419)	1	
	849576-101	HARNESS ASSY, RH wing fillet to ammunition compartment *(see fig. 186 for reqd)*	REF	
-42	EMRA34SM1A106	CONNECTOR, (P60) plug (P-97 disc.) (81312)	1	
-43	EMRA20PM1A106	CONNECTOR, (P160) plug (P-98 disc.) (81312)	1	
	786455-1	HARNESS ASSY, mid fus automatic pitch control system *(see fig. 192 for reqd)*	REF	
	789159-1	HARNESS ASSY, mid fus automatic pitch control system *(see fig. 192 for reqd)*	REF	
	849588-101	HARNESS ASSY, mid fus automatic pitch control system *(see fig. 192 for reqd)*	REF	
-44	MS3110P8-4P	CONNECTOR, (J305) recp (P-75 disc.) (96906)	1	
-45	DM9700-12P004	CONNECTOR, (P86) plug (P-95 disc.) (17419)	1	
-46	EMRA66PF2A116G	CONNECTOR, (J11) recp (P-99 disc.) (81312)	1	
-47	850463-101	NIPPLE ASSY, bhd 335 LH conduit	1	
-48	1284-452	RECEPTACLE, (J292) (fus sta 335 and 505) (13556) *(see fig. 180 and 194)*	REF	6701-6740
-49	MS3100K16S1P	CONNECTOR, (J51) recp (P-87 disc.) (96906) *(see fig. 192 for reqd)*	REF	

A - Reqd per AA.1F-104-OT-797

Figura e particolare	NDR	1 2 3 4 5 6 7 DENOMINAZIONE	Quant.	Codice applicab.
		EXTERNAL STORES ELECTRICAL		
190	849967-101	ELECTRICAL INSTL, centerline armament bay disc. *(see fig. 156 for reqd)*	REF	
- 1	LS3850-2-13	SHIELD ASSY, terminal block (36659)	2	
- 2	LS1912-2	TERMINAL BLOCK ASSY, electrical (36659)	1	
		Attaching Parts		
- 3	NAS600-6	SCREW (80205)	2	
- 4	MS21042L04	NUT (96906)	2	
		——————*———————		
- 5	LS4999A1-13	STRIP, terminal block insulating and numbering (36659)	1	
- 6	LS1912-15	TERMINAL BLOCK ASSY, electrical (36659)	1	
		Attaching Parts		
- 7	NAS600-8	SCREW (80205)	2	
		——————*———————		
- 8	LS4999A14-26	STRIP, terminal block insulating and numbering (36659)	1	
- 9	LS4998TB78	DECAL, terminal block identification (36659)	1	
-10	788174-1	BRACKET ASSY, terminal block	1	6701-6790
	788174-101	BRACKET ASSY, terminal block	1	6791-
		Attaching Parts		
-11	NAS603-8	SCREW (88044)	2	
		——————*———————		
-12	786405-1	SUPPORT, centerline armament bay terminal block	1	
-13	LS3850-4-5	SHIELD ASSY, terminal block (36659)	1	
-14	LS1944-2	TERMINAL BLOCK ASSY, electrical (36659)	1	
		Attaching parts		
-15	NAS600-6	SCREW (80205)	2	
-16	MS21042L04	NUT (96906)	2	
		——————*———————		
-17	LS4999B1-5	STRIP, terminal block insulating and numbering (36659)	1	
-18	LS4998TB58	DECAL, terminal block identification (36659)	1	
-20	NAS1096-3-12	SCREW (grd stud) (80205)	5	
	AN936A10	WASHER (grd stud) (88044)	5	
	AN935-10L	WASHER (grd stud) (88044)	5	
	AN345-10	NUT (grd stud) (88044)	5	
	AN960-10	WASHER (grd stud) (88044)	5	
	MS21042L3	NUT (grd stud) (96906)	5	
-21	786807-1	DECAL, centerline armament bay TB78	1	
-21A	849968-101	DECAL, special stores TB58	1	
	849659-101	HARNESS ASSY, special stores disc. P-53 and P-54 *(see fig. 156 for reqd)*	REF	6701-6765
	852068-101	HARNESS ASSY, special stores disc. P-53 and P-54 *(see fig. 156 for reqd)*	REF	6766-
-22	EMRA50-8SF2A116	CONNECTOR, (J80) recp (P-53 disc.) (81312)	1	
-23	728422-1	A. CONNECTOR, (J71) recp (P-54 disc.)	1	6701-6765
	MS3103-32-7S	B. CONNECTOR, (J71) recp (P-54 disc) (96906)	1	
-24	852069-101	B. BRACKET, special weapons cable RH *(see fig. 38 for reqd)*	REF	

A - Removed per AA.1F-104S-OT-150A
B - Reqd per AA.1F-104S-OT-150A

Fuselage Electrical and Electronics

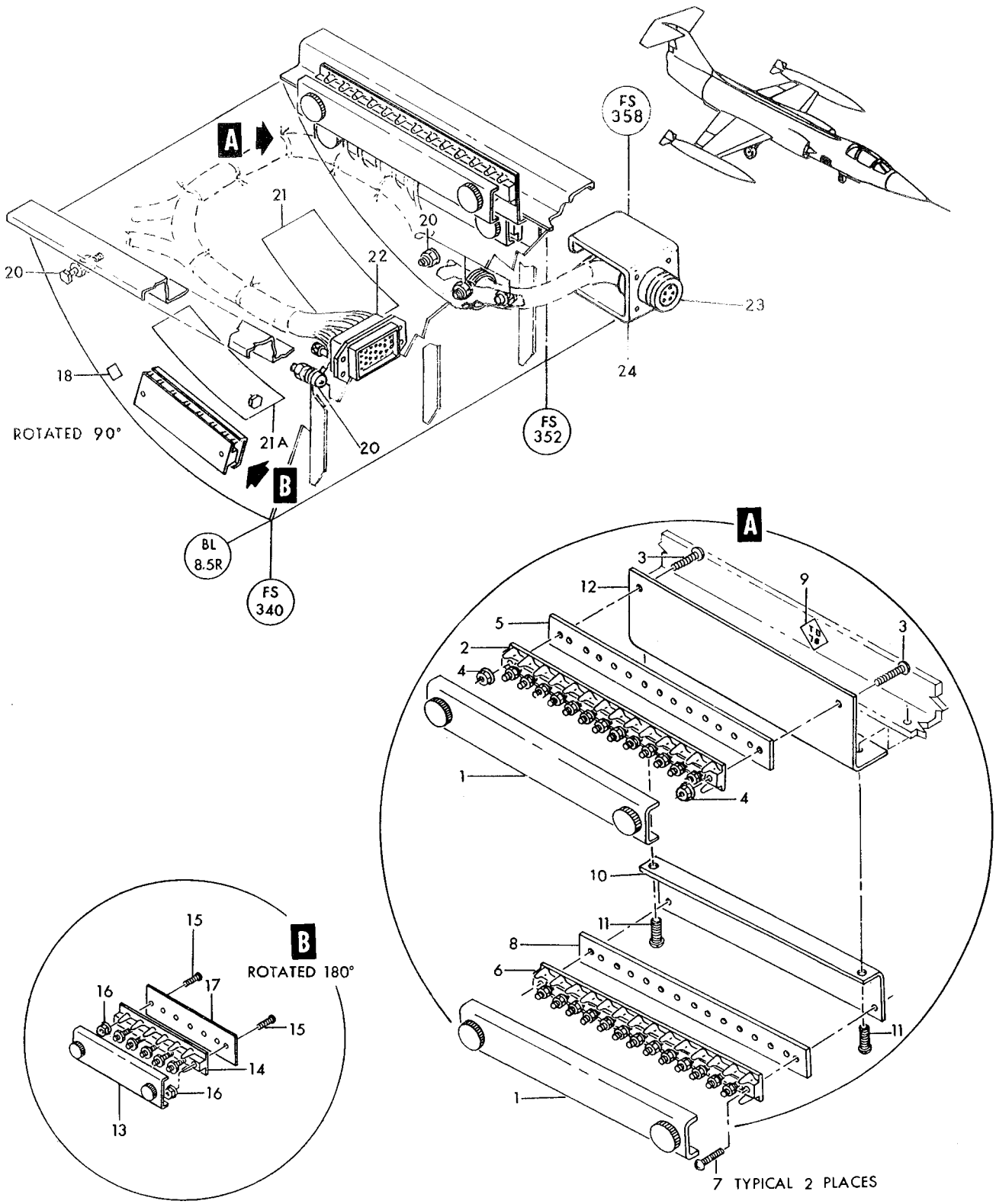

Figure 190—External Stores Electrical

Figura e particolare	NDR	1 2 3 4 5 6 7 DENOMINAZIONE	Quant.	Codice applicab.
		ENGINE AIR SCOOP DUCT ANTI-ICING ELECTRICAL		
191	849920-101	. ELECTRICAL INSTL, LH duct anti-icing *(see fig. 51 for reqd)*	REF	
	849920-103	. ELECTRICAL INSTL, RH duct anti-icing *(see fig. 51 for reqd)*	REF	
- 1	LS7000A6-2	. . TERMINAL BLOCK ASSY, electrical (36659)	1	
		Attaching Parts		
- 2	NAS601-8	. . SCREW (80205)	2	
- 3	MS21042L06	. . NUT (96906)	2	
		———————*———————		
- 4	LS7009-6	. . DECAL, terminal block identification (36659)	1	
- 5	LS4998TB14	. . DECAL, terminal block identification (LH only) (36659)	1	
	LS4998TB13	. . DECAL, terminal block identification (RH only) (36659)	1	
- 6	NAS604-16	. . SCREW (grd stud) (80205)	1	
- 7	AN936A416	. . WASHER (grd stud) (88044)	1	
- 8	MS35337-44	. . WASHER (grd stud) (96906)	1	
- 9	AN315-4R	. . NUT (grd stud) (88044)	1	
-10	AN960-416	. . WASHER (grd stud) (88044)	1	
-11	MS21042L4	. . NUT (grd stud) (96906)	1	
-12	MS21919WDG5	. . CLAMP (96906)	1	
		Attaching Parts		
-13	NAS603-12	. . SCREW (80205)	1	
-14	NAS43DD3-16	. . SPACER (80205)	1	
-15	MS21042L3	. . NUT (96906)	1	
		———————*———————		
-16	NAS602-6	. . SCREW (80205)	8	
-17	MS35337-42	. . WASHER (96906)	8	
-18	AN960-8	. . WASHER (88044)	16	
	849557-101	. . HARNESS ASSY, duct anti-ice overheat thermostat	1	
-19	G32-1P	. . . THERMOSTAT, (S63) duct anti-icing heat control (97896) (Lockheed spec dwg 613686-1)	1	
-19A	NAS514P440-16	. . . SCREW (80205)	2	
		Attaching Parts		
-20	MS20341-4S	. . . NUT (96906)	6	
-21	MS35333-36	. . . WASHER (96906)	6	
		———————*———————		
-22	851370-101	. . DECAL, duct anti-icing TB14 (LH only)	1	
	851371-101	. . DECAL, duct anti-icing TB13 (RH only)	1	

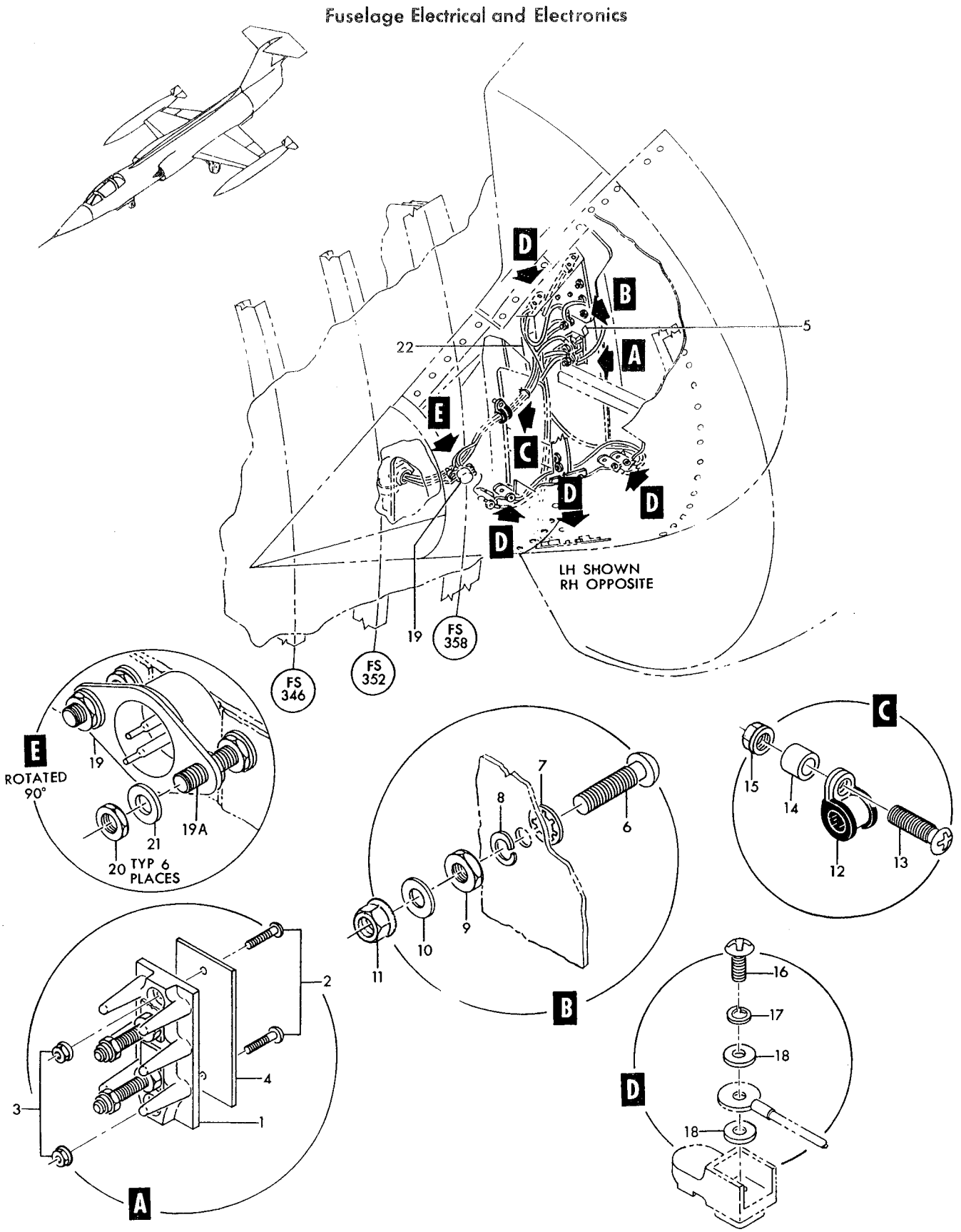

Figure 191— Engine Air Scoop Duct Anti-icing Electrical

Figura e particolare	NDR	1	2	3	4	5	6	7	DENOMINAZIONE	Quant.	Codice applicab.
									LEFT HAND ELECTRICAL FUSELAGE STATION 358 TO 614		
192	849912-101		.						ELECTRICAL INSTL, mid fus (NHA 849138-101) *(see fig. 193 and 194)*	1	
	849916-101		.	.					ELECTRICAL INSTL, LH wing fillet equipment and wiring *(see fig. 186)*	1	
- 1	849911-101		.	.					ELECTRICAL INSTL, LH door uplock switch *(see fig. 188)*	1	
- 2	849911-109		.	.					ELECTRICAL INSTL, anti-skid LH *(see fig. 188)*	1	
- 3	764165-7		.	.					DISCONNECT INSTL, (J92) engine starter *(see fig. 253)*	1	
- 4	786801-1		.	.					DECAL generator No. 1	1	
	785493-1		.	.					HARNESS ASSY, bhd 505 to data link antenna *(see fig. 201)*	1	6701-6815
	852382-101		.	.					HARNESS ASSY, bhd 505 to data link antenna *(see fig. 201)*	1	6816-
- 4A	UG1185U		.	.	.				CONNECTOR, (P17) plug (bhd505 disc.) (80058)	1	
	Z158	B.	.	.					GRIP (04073)	1	
	849588-101		.	.					HARNESS ASSY, mid fus automatic pitch control system *(see fig. 189 and 193)*	1	
- 5	CA00KE14S5P		.	.					CONNECTOR, (J53) recp (P-14 disc.) (71468)	1	
- 6	CA00KE24-28S		.	.					CONNECTOR, (J54) recp (P-15 disc.) (71468)	1	
- 7	791640-1		.	.					DETECTION INSTL, fus sta 586 fire warning *(see fig. 196)*	1	
	849836-101		.	.					HARNESS ASSY, engine disc. to fus sta 505 *(see fig. 194)*	1	6701-6740
- 8	1211-416		.	.	.				CONNECTOR, (P439) plug (engine disc.) (13556)	1	6701-6740
	851072-101		.	.					HARNESS ASSY, bhd 505 to bhd 614 signal horn ant	1	6701-6815
	852390-101		.	.					HARNESS ASSY, bhd 505 to bhd 614 signal horn ant	1	6816-
- 9	UG1185A/U		.	.	.				CONNECTOR, (P17) plug (fus sta 505 and 614) (80058)	2	
	Z158	B.	.	.					GRIP (04073)	2	
- 9A	MS90159-30E		.	.					ADAPTER, (P99) (96906)	1	
	849780-101		.	.					HARNESS ASSY, P-142 plug to LH wing fillet *(see fig. 9 and 16)*	1	
- 9B	EMRA14SM1A106		.	.	.				CONNECTOR, (P58) plug (P-142 disc.) (81312)	1	
- 9C	MS3100K16S1P		.	.					CONNECTOR, (J51) recp (P-87 disc.) (96906) *(see fig. 189)*	1	
- 9D	NAS1096-3-12		.	.					SCREW (grd stud) (80205)	6	
	AN936A10		.	.					WASHER (grd stud) (88044)	6	
	MS35337-43		.	.					WASHER (grd stud) (96906)	6	
	AN345-10		.	.					NUT (grd stud) (88044)	6	
	AN960-10		.	.					WASHER (grd stud) (88044)	6	
	MS21042L3		.	.					NUT (grd stud) (96906)	6	
	849913-101		.						ELECTRICAL INSTL, mid fus LH *(see fig. 31 for reqd)*	REF	
	849583-101		.	.					HARNESS ASSY, fuel cell area splice to boost pumps No. 1 and 3	1	
-10	MS3103-14S5S		.	.	.				CONNECTOR, (J68) recp (P-55 and P-57 disc.) (96906)	2	
	851486-101		.	.					TERMINAL BLOCK INSTL, flap actuator (LH) *(see fig. 186)*	1	
-11	763567-3		.	.					DETECTOR INSTL, fus sta 520 fire warning *(see fig. 196)*	1	
-12	850933-101		.	.					DETECTOR INSTL, fus sta 566 fire warning *(see fig. 196)*	1	6701-6790; 6831-
	852353-101		.	.					DETECTOR INSTL, fus sta 566 fire warning *(see fig. 196)*	1	6791-6830
-13	763525-5		.	.					DETECTOR INSTL, fus sta 573 fire warning *(see fig. 196)*	1	
	764190-503		.	.					TERMINAL BLOCK INSTL, fus sta 526	1	
-14	LS3850-2-10		.	.	.				SHIELD ASSY, terminal block (36659)	1	
-15	OP210-10		.	.	.				TERMINAL BLOCK ASSY, electrical (81872)	1	
									Attaching Parts		
	AN515-4R8		.	.	.				SCREW (88044)	3	
	AN960D4		.	.	.				WASHER (88044)	3	
	MS21042L04		.	.	.				NUT (96906)	3	
									*		
	OP167-1		.	.	.				STRIP, nut insulating (81872)	3	
-16	LS4999A1-10		.	.	.				STRIP, terminal block insulating and numbering (36659)	1	
-17	LS4998TB12		.	.	.				DECAL, terminal block identification (36659)	1	
-18	786796-1		.	.	.				DECAL, fus sta 526	1	
-18A	786806-1		.	.					DECAL, fixed frequency hydraulic generator	1	
	849591-101		.	.					HARNESS ASSY, engine starter disc to fuel cell splice *(see fig. 112 and 113)*	1	6701-6765
	852136-101		.	.					HARNESS ASSY, engine starter disc. to fuel cell splice *(see fig. 112 and 113)*	1	6766-
	849587-101		.	.					HARNESS ASSY, mid fus automatic pitch control stick pusher	1	
-19	CA3100KE10SL4P		.	.	.				CONNECTOR, (J56) recp (P-128 disc.) (71468)	1	
	849911-105		.	.					ELECTRICAL INSTL, LH main wheel well *(see fig. 188)*	1	
	849554-101		.	.					HARNESS ASSY, LH mid fus *(see fig. 189 and 259)*	1	6701-6740
	849871-101		.	.					HARNESS ASSY, LH mid fus *(see fig. 189 and 259)*	1	6741-6815; 6831-
	852298-101		.	.					HARNESS ASSY, LH mid fus *(see fig. 189 and 259)*	1	6816-6830

Fuselage Electrical and Electronics

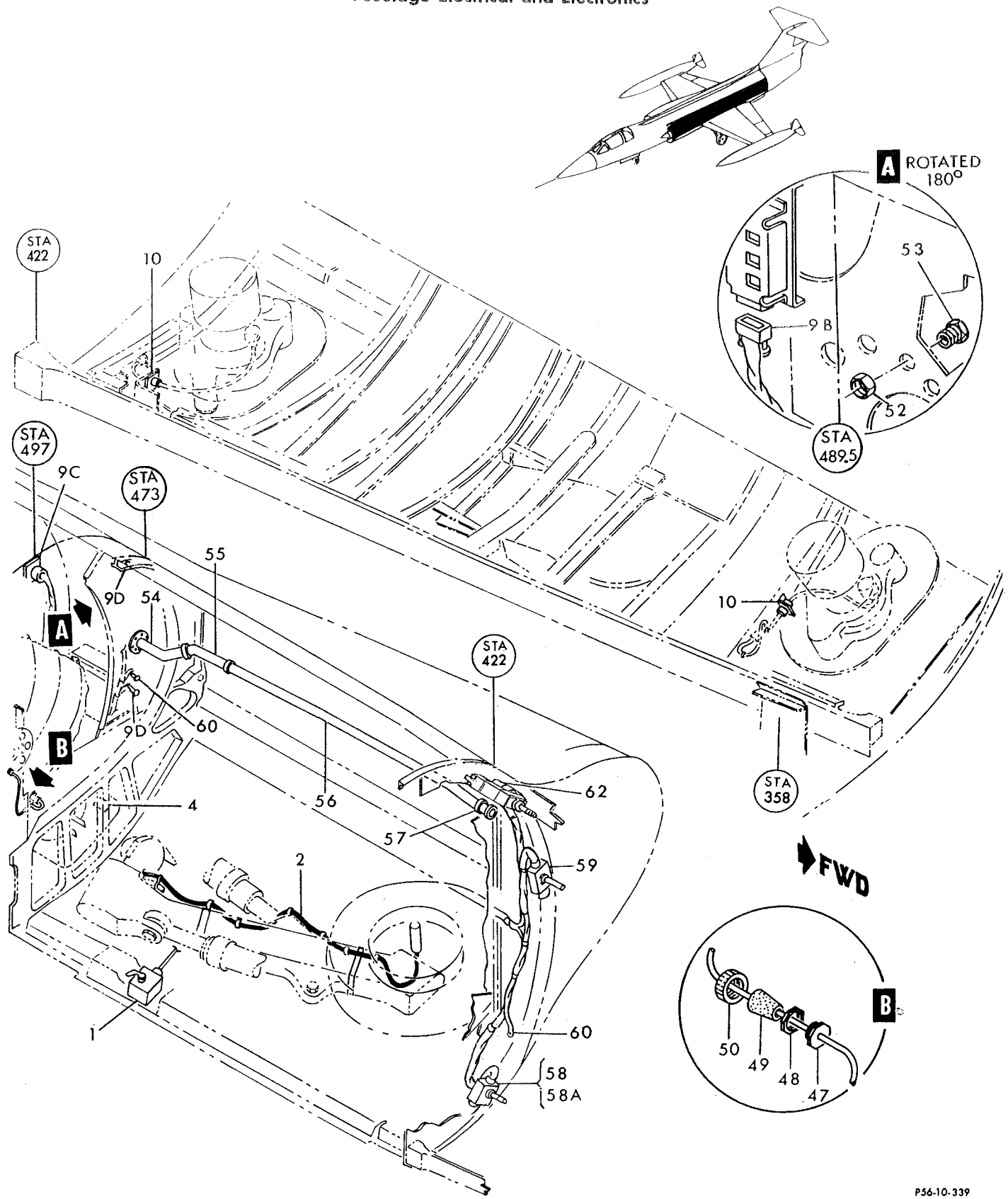

Figure 192 — Left Hand Electrical Fuselage Station 358 to 614 (Sheet 1 of 2)

Fuselage Electrical and Electronics

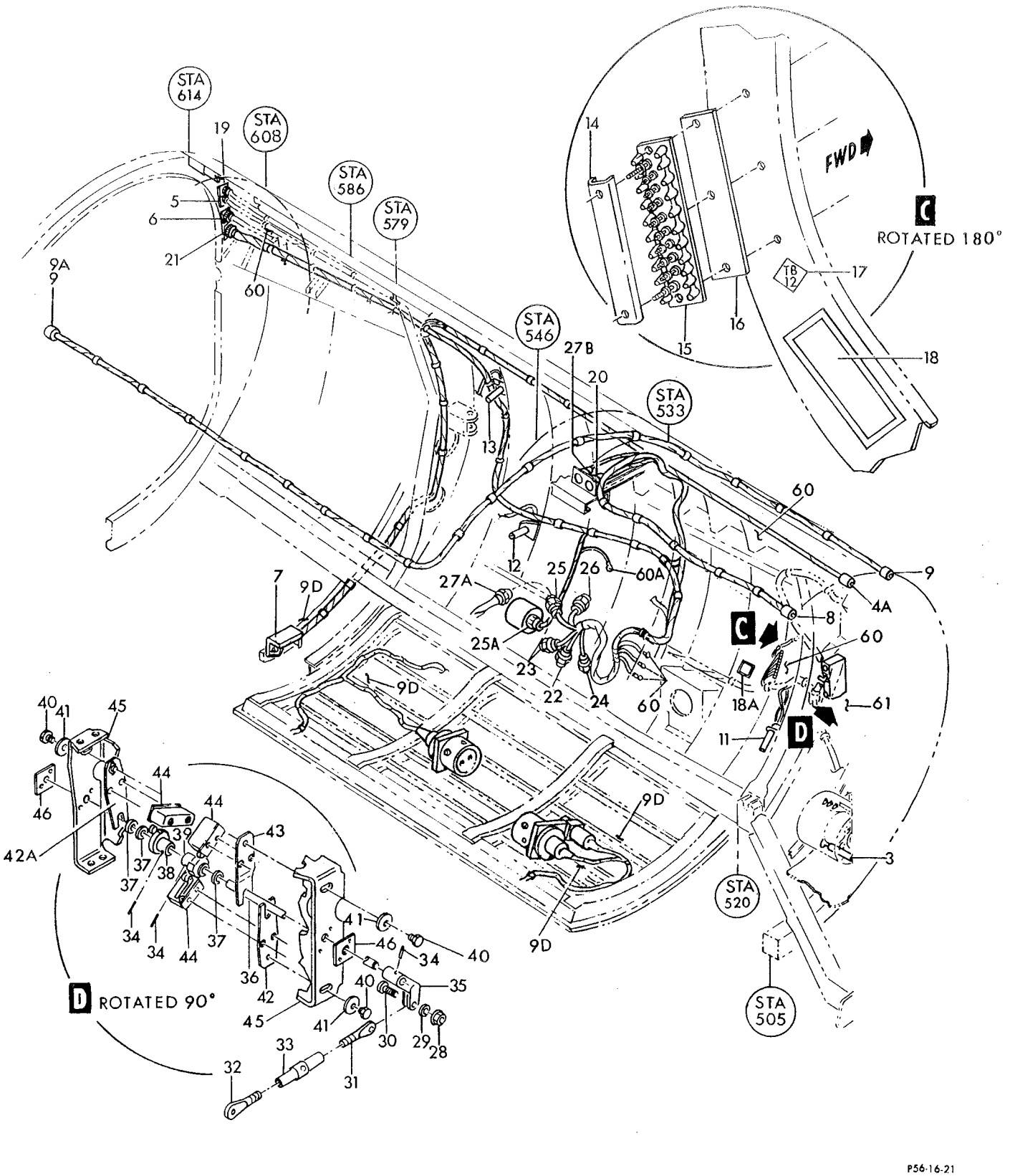

Figure 192—Left Hand Electrical Fuselage Station 358 to 614 (Sheet 2 of 2)

Figura e particolare	NDR	1	2	3	4	5	6	7	DENOMINAZIONE	Quant.	Codice applicab.
192-20	CA06KE20-27P								CONNECTOR, (P453) plug (P-79 disc.) (71468)	1	
	849553-101								HARNESS ASSY, P-16 recp to fus sta 310 splice	1	
-21	CA00KE24-28SW								CONNECTOR, (J55) recp (P-16 disc.) (71468)	1	
	849548-101								HARNESS ASSY, bhd 310 splice to engine thermocouple disc.	1	
-22	7-8741								CONNECTOR, (P144) plug (P-18 disc.) (02660)	1	
	849549-101								HARNESS ASSY, P-123 and P-124 plug to LH engine compt *(see fig. 113)*	1	
-23	MS3106K16S1S								CONNECTOR, (P105) plug (P-19 disc.) (96906)	1	
-24	MS3106K16-9S								CONNECTOR, (P120) plug (P-110 disc.) (96906)	1	
	849551-101								HARNESS ASSY, P-21 plug to ammo compt splice	1	6701-6740
	849870-101								HARNESS ASSY, P-21 plug to ammo compt splice	1	6741-
-25	MS3106K22-19S								CONNECTOR, (P116) plug (P-21 disc.) (96906)	1	
-25A	MS3108K16S4S								CONNECTOR, (P464) plug (Engine lock up solenoid) (96906)	1	6741-
	MS3057-8A								ADAPTER (96906)	1	6741-
	849550-101								HARNESS ASSY, P-22 plug to P-123 and P-124 plugs	1	
-26	MS3106K18-11S								CONNECTOR, (P459) plug (P-22 disc.) (96906)	1	
	849552-101								HARNESS ASSY, generator No. 1 to T-63 terminal strip *(see fig. 122)*	1	6701-6765
	852066-101								HARNESS ASSY, generator No. 1 to T-63 terminal strip *(see fig. 122)*	1	6766-
	849547-101								HARNESS ASSY, aileron trim motor to bhd 310 splice	1	
-27A	MS3106K16-9S								CONNECTOR, (P120) plug (aileron trim motor) (96906)	1	
	852299-101								HARNESS ASSY, P-312 to oil press XMTR and hyd gen s/o valve *(see fig. 124 and 249)*	1	6791-6830
-27B	CA3106KE18-1P								CONNECTOR, (P466) plug (P-312 disc.) (71468)	1	6791-6830
	MS3057-10A								ADAPTER (96906)	1	6791-6830
	780411-101								SWITCH INSTL, TE flap position indicator	1	
-28	MS21042L3								NUT (96906)	1	
-29	AN960-10L								WASHER (88044)	1	
-30	AN23-12A								BOLT (88044)	1	
-31	NAS648-22LS								EYE (80205)	1	
-32	NAS648-32RS								EYE (80205) *(see fig. 13)*	1	
-33	NAS649B32S								BARREL (80205)	1	
	780410-103								ACTUATOR ASSY, TE flap position indicator	1	6701-6865
	780410-105								ACTUATOR ASSY, TE flap position indicator	1	6866-
									Attaching Parts		
	NAS1096-3-8								SCREW (80205)	4	
	AN960-10L								WASHER (88044)	4	
									*		
-34	NAS561P3-8								PIN (80205)	3	
-35	765240-1								LEVER, flap position cam	1	
-36	780409-1								SHAFT, position switch cam	1	
-37	AN960D416								WASHER (88044)	3	
-38	763220								CAM, flap down actuator	1	6701-6865
	763220-101								CAM, flap down actuator	1	6866-
-39	763219								CAM, flap up actuator	1	6701-6865
	763219-101								CAM, flap up actuator	1	6866-
-40	NAS1103-3								BOLT (80205)	3	
-41	LS881-9								WASHER, plain (36659)	3	
-42	798289-1								SUPPORT, TE flap position switch (flap up)	1	
-42A	798290-1								SUPPORT, TE flap position switch (flap down)	1	
-43	780407-101								PLATE ASSY, TE flap position switch	1	
	780468-1								HARNESS ASSY, TE flap up position switch	1	
	780469-1								HARNESS ASSY, TE flap down position switch	1	
	780470-1								HARNESS ASSY, TE flap take-off position switch	1	
-44	9176								SWITCH, (S56) SPDT roller actuated (82227) (Lockheed spec dwg 613355-5)	1	
									Attaching Parts		
	AN507-440R20								SCREW (88044)	2	
	MS21042L04								NUT (96906)	2	
									*		
	780406-105								BRACKET ASSY, TE flap position switch	1	
-45	780406-107								CHANNEL, TE flap	1	

Figura e particolare	NDR	1 2 3 4 5 6 7 DENOMINAZIONE	Quant.	Codice applicab.
192-46	780408-1	. . . . . BEARING, cam flap position	2	
-47	AN3064-4	. . CONNECTOR (88044)	1	
-48	AN3066-4	. . LOCKNUT (88044)	1	
-49	726580-3	. . GROMMET, pressure seal	1	
-50	AN3054-4	. . NUT (85044)	1	
-52	AN3066-8	. . LOCKNUT (88044)	1	
-53	AN3064-8	. . CONNECTOR (88044)	1	
	850461-105	. . CONDUIT INSTL, electrical LH	1	
-54	775354-1	. . . CONDUIT ASSY, electrical LH *(see fig. 193)*	1	
-55	784581-37	. . . CONDUIT, electrical *(see fig. 193)*	1	
-56	784581-35	. . . CONDUIT, electrical	1	
-57	785376-1	. . . NIPPLE, electrical conduit	1	
	785705-1	. . . CONDUIT, LH APC *(see fig. 193)*	1	6701-6765
	785705-101	. . . CONDUIT, LH APC *(see fig. 193)*	1	6766-
	849523-101	. . HARNESS ASSY, inlet door actuator to LH fillet splice	1	
-58	MS3116P16-8S	. . . CONNECTOR, (P1) plug (LH inlet door lock actuator) (96906)	1	
-58A	80B225	. . . SWITCH, DPDT spring return rotary actuator (LH inlet door open position) (98816) (Lockheed spec dwg 740418-103) *(see fig. 52)*	1	
-59	80B200	. . . SWITCH, (S172) DPDT spring return rotary actuator (LH inlet door closed position) (98816) (Lockheed spec dwg 740418-101) *(see fig. 52)*	1	
-60	NAS1096-3-12	. . SCREW (grd stud) (80205)	8	
-60A	NAS1096-3-12	. . SCREW (grd stud) (80205)	1	6816-6830
-61	NAS604-16	. . SCREW (grd stud) (80205)	1	
	AN936A10	. . WASHER (grd stud) (88044)	8	
	AN936A10	. . WASHER (grd stud) (88044)	1	6816-6830
	AN936A416	. . WASHER (grd stud) (88044)	1	
	MS35337-43	. . WASHER (grd stud) (96906)	8	
	MS35337-43	. . WASHER (grd stud) (96906)	1	6816-6830
	MS35337-44	. . WASHER (grd stud) (96906)	1	
	AN345-10	. . NUT (grd stud) (88044)	8	
	AN345-10	. . NUT (grd stud) (88044)	1	6816-6830
	AN345-4R	. . NUT (grd stud) (88044)	1	
	AN960-10	. . WASHER (grd stud) (88044)	8	
	AN960-10	. . WASHER (grd stud) (88044)	1	6816-6830
	AN960-416	. . WASHER (grd stud) (88044)	1	
	MS21042L3	. . NUT (grd stud) (96906)	8	
	MS21042L3	. . NUT (grd stud) (96906)	1	6816-6830
	MS21042L4	. . NUT (grd stud) (96906)	1	
-62	1107T100-7	. ACTUATOR, (B68) electro-mechanical (A2898) (98689) (Lockheed spec dwg 670977-107) (For spare replacement use 1107T100-9) *(see fig. 52 for reqd)*	REF	
	1107T100-9	A. ACTUATOR, (B68) electro-mechanical (A2898) (98689) (Lockheed spec dwg 670977-109) (Spare replacement for 1107T100-7) *(see fig. 52 for reqd)*	REF	

A - Reqd per AA.1F-104S-OT-134A
B - Reqd per AA.1F-104-OT-797

Figura e particolare	NDR	DENOMINAZIONE 1 2 3 4 5 6 7	Quant.	Codice applicab.
		CENTER FUSELAGE ELECTRICAL FUSELAGE STATION 358 TO 614		
193	849912-101	ELECTRICAL INSTL, mid fus *(see fig. 192 for reqd)*	REF	
	785567-1	JUNCTION BOX INSTL, fus sta 481 automatic pitch control system	1	6701-6765
	785567-101	JUNCTION BOX INSTL, fus sta 481 automatic pitch control system	1	6766-
- 1	785567-3	JUNCTION BOX ASSY, fus sta 481 automatic pitch control system	1	6701-6765
	785567-103	JUNCTION BOX ASSY, fus sta 481 automatic pitch control system	1	6766-
		Attaching Parts		
	NAS623-3-3	SCREW (80205)	2	
	AN960D10	WASHER (88044)	2	
	LS4446-10	WASHER, synthetic rubber (36659)	2	
	22K1-02	NUT, self-locking cap (72962)	2	
- 2	785565-1	COVER ASSY, automatic pitch control system junction box	1	
		Attaching Parts		
	AN255-6	SCREW (88044)	4	
	AN960D8	WASHER (88044)	4	
	LS4446-8	WASHER, synthetic rubber (36659)	4	
- 3	794699-1	DECAL, TB33 junction box wiring (reqd on 785567-1)	1	
	785566-1	JUNCTION BOX ASSY, automatic pitch control system	1	6701-6765
	785566-101	JUNCTION BOX ASSY, automatic pitch control system	1	6766-
	785566-5	BOX ASSY, automatic pitch control system junction	1	6701-6765
	785566-103	BOX ASSY, automatic pitch control system junction	1	6766-
- 4	LS1904-2	TERMINAL BLOCK ASSY, electrical (36659)	1	
		Attaching Parts		
	AN515-4R6	SCREW (88044)	2	
	LS4446-6	WASHER, synthetic rubber (36659)	2	
	AN960D6	WASHER (88044)	2	
	MS21042L04	NUT (96906)	2	
- 5	785566-7	STRIP, automatic pitch control junction box	1	
- 6	LS1904-7	TERMINAL BLOCK ASSY, electrical (36659)	1	
		Attaching Parts		
	AN515-4R6	SCREW (88044)	2	
	LS4446-6	WASHER, synthetic rubber (36659)	2	
	AN960D6	WASHER (88044)	2	
	MS21042L04	NUT (96906)	2	
- 7	785566-9	STRIP, automatic pitch control junction box	1	
- 8	MS25226-2-2	BUS (96906)	1	
- 9	LS1904-12	TERMINAL BLOCK ASSY, electrical (36659)	1	
		Attaching Parts		
	AN515-4R6	SCREW (88044)	2	
	LS4446-6	WASHER, syntetich rubber (36659)	2	
	AN960D6	WASHER (88044)	2	
	MS21042L04	NUT (96906)	2	
-10	785566-11	STRIP, automatic pitch control junction box	1	
-11	LS1904-17	TERMINAL BLOCK ASSY, electrical (36659)	1	
		Attaching Parts		
	AN515-4R6	SCREW (88044)	2	
	LS4446-6	WASHER, synthetic rubber (36659)	2	
	AN960D6	WASHER (88044)	2	
	MS21042L04	NUT (96906)	2	
-12	785566-13	STRIP, automatic pitch control junction box	1	
-13	LS1903-22	TERMINAL BLOCK ASSY, electrical (36659)	1	
		Attaching Parts		
	AN515-4R6	SCREW (88044)	2	
	LS4446-6	WASHER, synthetic rubber (36659)	2	

Fuselage Electrical and Electronics

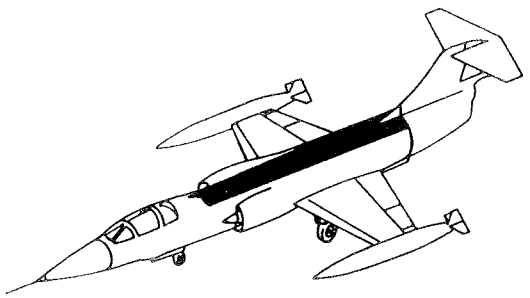

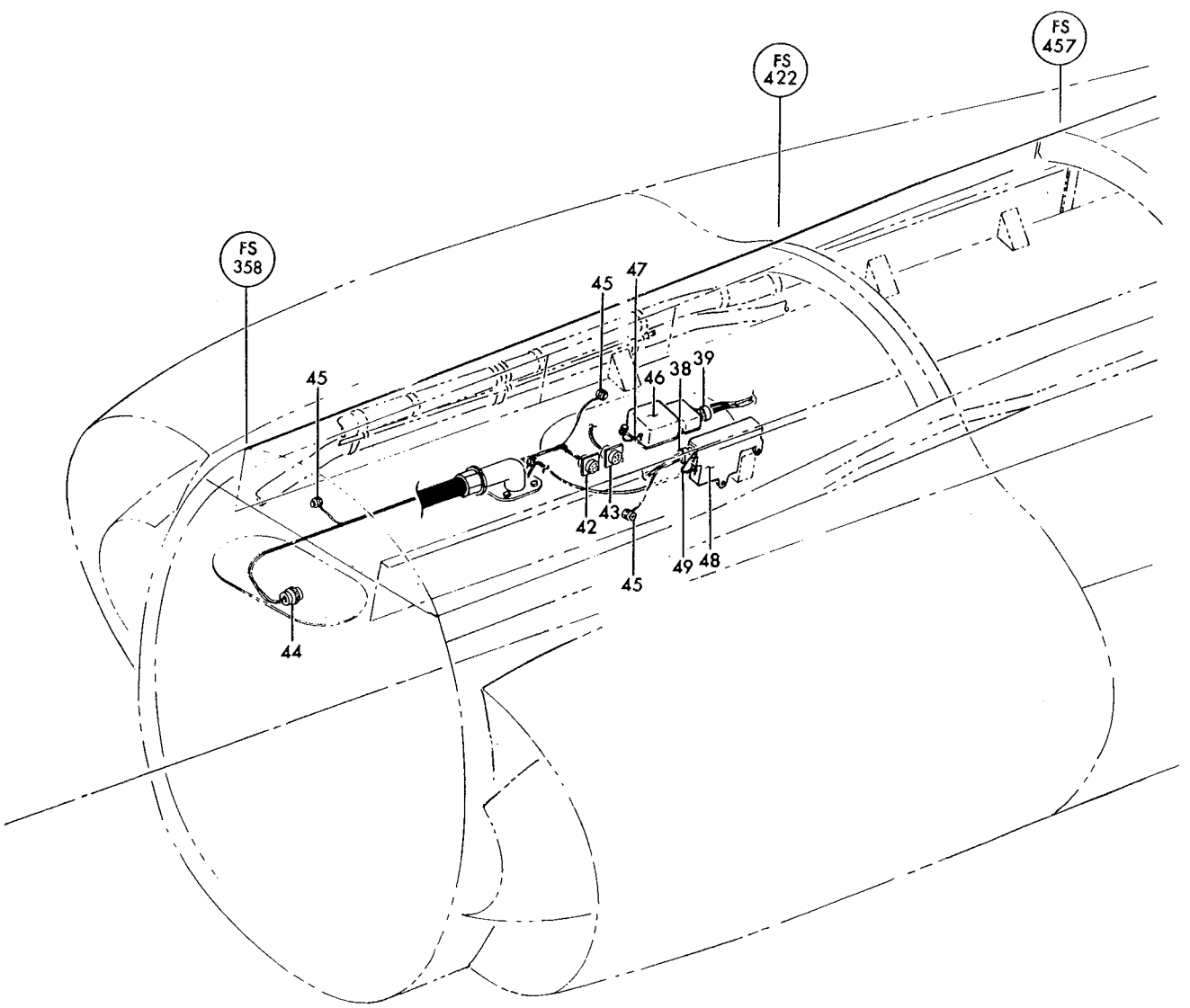

Figure 193— Center Fuselage Electrical Fuselage Station 358 to 614 (Sheet 1 of 2)

Fuselage Electrical and Electronics

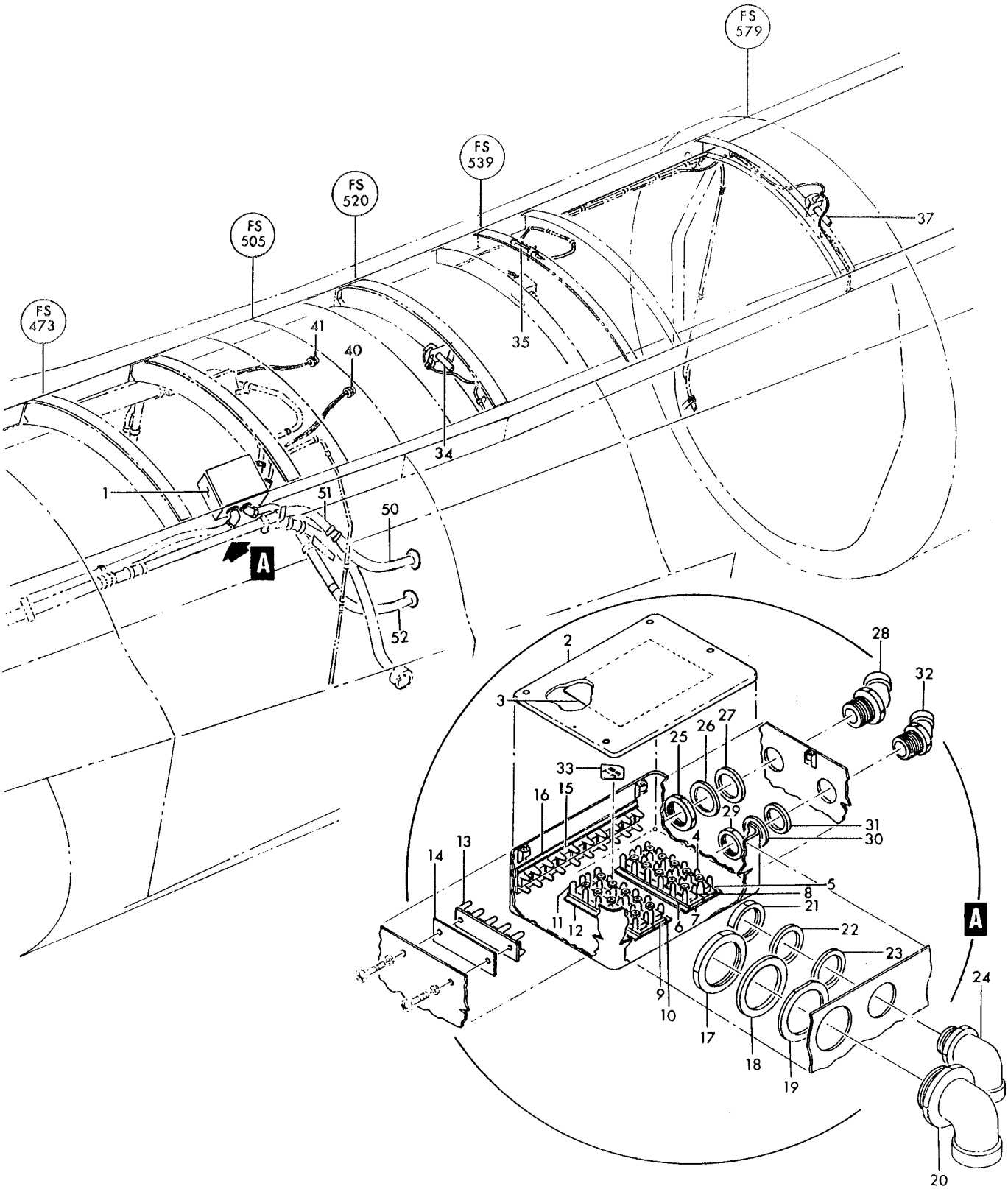

Figure 193— Center Fuselage Electrical Fuselage Station 358 to 614 (Sheet 2 of 2)

Figura e particolare	NDR	1	2	3	4	5	6	7	DENOMINAZIONE	Quant.	Codice applicab.
193	AN960D6								WASHER (88044)	2	
	MS21042L04								NUT (96906)	2	
									——————☼——————		
-14	LS4999A21-24								STRIP, terminal block insulating and numbering (36659)	1	
-15	LS1908-26								TERMINAL BLOCK ASSY, electrical (36659)	1	
									Attaching Parts		
	AN515-4R6								SCREW (88044)	3	
	LS4446-6								WASHER, synthetic rubber (36659)	3	
	AN960D6								WASHER (88044)	3	
	MS21042L04								NUT (96906)	3	
									——————☼——————		
-16	LS4999A25-33								STRIP, terminal block insulating and numbering (36659)	1	
-17	AN3066-20								NUT (88044)	1	
-18	LS2805-20								WASHER, bhd fitting (36659)	1	
-19	785563-1								WASHER, fus sta 481 automatic pitch control junction box vapor seal	1	
-20	AN3062-20								ELBOW (88044)	1	
-21	AN3066-16								NUT (88044)	1	6701-6765
	AN3066-20								NUT (88044)	1	6766-
-22	LS2805-16								WASHER, bhd fitting (36659)	1	6701-6765
	LS2805-20								WASHER, bhd fitting (36659)	1	6766-
-23	727609-3								WASHER, fus sta 481 automatic pitch control junction box vapor seal	1	6701-6765
	785563-1								WASHER, fus sta 481 automatic pitch control junction box vapor seal	1	6766-
-24	AN3062-16								ELBOW (88044)	1	6701-6765
	AN3062-20								ELBOW (88044)	1	6766-
-25	AN3066-12								NUT (88044)	1	
-26	LS2805-12								WASHER, bhd fitting (36659)	1	
-27	727609-5								WASHER, fus sta 481 automatic pitch control junction box vapor seal	1	
-28	AN3060-12								ELBOW (88044)	1	
-29	AN3066-8								NUT (88044)	1	
-30	LS2805-8								WASHER, bhd fitting (36659)	1	
-31	727609-7								WASHER, fus sta 481 automatic pitch control junction box vapor seal	1	
-32	AN3060-8								ELBOW (88044)	1	
-33	LS4998TB33								DECAL, terminal block identification (36659)	1	
	849596-101								HARNESS ASSY, fuel valves to bhd 335 splice *(see fig. 110)*	1	
-34	763567-5								DETECTOR INSTL, fus sta 520 fire warning *(see fig. 196)*	1	
-35	763523								DETECTOR INSTL, fus sta 539 fire warning *(see fig. 196)*	1	
-37	763525-3								DETECTOR INSTL, fus sta 572 fire warning *(see fig. 196)*	1	
	849588-101								HARNESS ASSY, mid fus automatic pitch control system *(see fig. 192 for reqd)*	REF	
-38	PT06P14-18S								CONNECTOR, (P128) plug (rate gyro) (77820)	1	
-39	MS3116P14-19S								CONNECTOR, (P137) plug (2 axis gyro) (96906)	1	
	785494-1								HARNESS ASSY, bhd 310 to bhd 505 data link antenna lead *(see fig. 189 for reqd)*	REF	6701-6815
	852381-101								HARNESS ASSY, bhd 310 to bhd 505 data link antenna lead *(see fig. 189 for reqd)*	REF	6816-
-40	UG1185U								CONNECTOR, (P17) plug (bhd 505) (80058)	1	
	Z158	A.							GRIP (04073)	1	
	785495-1								HARNESS ASSY, bhd 310 to bhd 505 IFF-Tacan antenna lead *(see fig. 189 for reqd)*	REF	6701-6815
	852384-101								HARNESS ASSY, bhd 310 to bhd 505 IFF-Tacan antenna lead *(see fig. 189 for reqd)*	REF	6816-
-41	UG1185U								CONNECTOR, (P17) plug (bhd 505) (80058)	1	
	Z158								GRIP (04073)	1	
	849955-101								ELECTRICAL INSTL, fuel tank probes and pressure switches (NHA 849138-101)	1	
	849594-101								HARNESS ASSY, ammo compt splice to auxiliary tank fuel shutoff valve *(see fig. 100)*	1	
	849585-101								HARNESS ASSY, aft quantity transmitter probe to fuel cell splice *(see fig. 100, 102, 103, 106 and 152)*	1	
-42	CA3100ER10SL4P								CONNECTOR, (J69) recp (P61 disc.) (71468)	1	

Figura e particolare	NDR	DENOMINAZIONE	Quant.	Codice applicab.
193-43	MS3103-14S7S	CONNECTOR, (J70) recp (P-62 disc.) (96906)	1	
	849586-101	HARNESS ASSY, ammunition compartment splice to fuel level control valve	1	
-44	MS25183-10SL3S	CONNECTOR, (P5) plug (P-135 disc.) (71468)	1	
	849648-101	HARNESS ASSY, ammunition compartment fuel quantity *(see fig. 97 and 100)*	1	
-45	NAS1096-3-12	SCREW (grd stud) (88044)	3	
	AN936A10	WASHER (grd stud) (88044)	3	
	AN935-10L	WASHER (grd stud) (88044)	3	
	AN345-10	NUT (grd stud) (88044)	3	
	AN960D10	WASHER (grd stud) (88044)	3	
	MS21042L3	NUT (grd stud) (96906)	3	
	784378-3	GYRO INSTL, 2 axis and automatic pitch control (HNA 849071-101)	1	
-46	GG112B2	GYRO GROUP, (MP3) 2 axis rate (A0019) (94580) (Lockheed spec dwg 620671-7) (see T.O. 5A11-2-43-4)	1	
		Attaching Parts		
	AN960-416L	WASHER (88044)	3	
	MS21042L4	NUT (96906)	3	
-47	MS25083-1BB10	JUMPER (96906)	1	
		Attaching Parts		
	AN520-10R8	SCREW (88044)	1	
	AN960D10	WASHER (88044)	1	
	MS21042L3	NUT (96906)	1	
-48	GG128B2	GYRO, (MP4) automatic pitch control rate (A0019) (94580) (Lockheed spec dwg 620681-5) (see T.O. 5A11-2-43-4)	1	
		Attaching Parts		
	NAS623-3-5	SCREW (80205)	1	
-49	MS25083-1BB6	JUMPER (96906)	1	
		Attaching Parts		
	AN520-10R8	SCREW (88044)	1	
	AN960D10	WASHER (88044)	1	
	MS21042L3	NUT (96906)	1	
-50	775354-1	CONDUIT ASSY, electrical LH *(see fig. 192 for reqd)*	REF	
-51	784581-37	CONDUIT, electrical *(see fig. 192 for reqd)*	REF	
-52	785705-1	CONDUIT, LH APC *(see fig. 192 for reqd)*	REF	6701-6765
	785705-101	CONDUIT, LH APC *(see fig. 192 for reqd)*	REF	6766-

A - Reqd per AA.1F-104-OT-797

Figura e particolare	NDR	DENOMINAZIONE 1 2 3 4 5 6 7	Quant.	Codice applicab.
		RIGHT HAND ELECTRICAL FUSELAGE STATION 358 TO 614		
194	849912-101	. ELECTRICAL INSTL, mid fus *(see fig. 192 for reqd)*	REF	
- 1	849916-103	. . ELECTRICAL INSTL, RH wing fillet wiring and equipment *(see fig. 186)*	1	
- 2	849911-103	. . ELECTRICAL INSTL, RH door uplock switch *(see fig. 188)*	1	
- 3	849911-111	. . ELECTRICAL INSTL, anti-skid RH *(see fig. 188)*	1	
- 4	779413-101	. . AUTOTRANSFORMER INSTL, landing light *(see fig. 188)*	1	
	791672-1	. . HARNESS ASSY, bhd 505 to IFF/Tacan antenna *(see fig. 201)*	1	6701-6815
	852385-101	. . HARNESS ASSY, bhd 505 to IFF/Tacan antenna *(see fig. 201)*	1	6816-
- 4A	UG1185U	. . . CONNECTOR, (P17) plug (bhd 505) (80058)	1	
	Z158	. . . GRIP (04073)	1	6816-
- 5	788627-1	. . DECAL, 20K VA generator No. 2	1	
	849589-101	. . HARNESS ASSY, automatic pitch control junction box to RH fillet *(see fig. 73 and 186)*	1	
	849836-101	. . HARNESS ASSY, engine disc. to fus sta 505 *(see fig. 192 for reqd)*	REF	6701-6740
- 5A	1211-416	. . . CONNECTOR, (P439) plug (fus sta 505) (13556)	1	6701-6740
- 5B	1284-452	. . RECEPTACLE, (J292) (fus sta 505) (13556)	1	6701-6740
	849914-101	. ELECTRICAL INSTL, mid fus RH *(see fig. 31 for r reqd)*	REF	
	785350-102	. . CONDUIT INSTL, fuel pump	1	
- 6	775159-45	. . . TUBE, fwd fuel pump RH	1	
- 7	775159-71	. . . CONDUIT, fus sta 376 RH fuel pump	1	
	849556-101	. . HARNESS ASSY, P-56 and P-58 recpt to ammo compt splice	1	
- 7A	MS3103-14S5S	. . . CONNECTOR, (J68) recp (P-56 and P-58 disc.) (96906)	2	
- 8	762024-501	. . RECEPTACLE INSTL, (J72) external power *(see fig. 195)*	1	6701-6790; 6831-
	852565-107	. . RECEPTACLE INSTL, (J72) external power *(see fig. 195)*	1	6791-6830
- 9	851486-102	. . TERMINAL BLOCK INSTL, fap actuator (RH) *(see fig. 186)*	1	
-10	763525-11	. . DETECTOR INSTL, fus sta 573 fire warning *(see fig. 196)*	1	6701-6790; 6831-
	763525-101	. . DETECTOR INSTL, fus sta 573 fire warning *(see fig. 196)*	1	6791-6830
-11	763525-7	. . DETECTOR INSTL, fus sta 573 fire warning *(see fig. 196)*	1	
-12	763567-4	. . DETECTOR INSTL, fus sta 520 fire warning *(see fig. 196)*	1	6701-6790; 6831-
-13	849911-107	. . ELECTRICAL INSTL, RH main wheel well *(see fig. 188)*	1	
	849545-101	. . HARNESS ASSY, RH mid fus *(see fig. 189)*	1	6701-6740
	849869-101	. . HARNESS ASSY, RH mid fus *(see fig. 189)*	1	6741-6815; 6831-
	852302-101	. . HARNESS ASSY, RH Mid fus *(see fig. 189)*	1	6816-6830
	849537-101	. . . HARNESS ASSY, fus sta 490 firewall connector *(see fig. 125)*	1	6701-6740
	849867-101	. . . HARNESS ASSY, fus sta 490 firewall connector *(see fig. 125 and 249)*	1	6741-
-14	MS3108K28-21S	. . . . CONNECTOR, (P206) plug (P-10 disc. bhd 490) (96906)	1	
	MS3057-16A	. . . ADAPTER (96906)	1	
	849538-101	. . . HARNESS ASSY, generator No. 2 to ammunition compartment *(see fig. 253)*	1	
-15	CA00KE20-27S	. . . . CONNECTOR, (J61) recp (P-79 disc.) (71468)	1	
	849541-101	. . . HARNESS ASSY, main hydraulic pressure transmitter to bhd 310 *(see fig. 132)*	1	
	849544-101	. . . HARNESS ASSY, speed brake selector valve to P-46 disc. *(see fig. 132)*	1	
	849535-101	. . . HARNESS ASSY, emergency hydraulic pressure transmitter to bhd 310 *(see fig. 132)*	1	
	849540-101	. . . HARNESS ASSY, hydraulic pressure switch to P-45 disc. *(see fig. 132)*	1	
	849542-101	. . . HARNESS ASSY, oil pressure transmitter *(see fig. 249)*	1	6701-6790; 6831-
	849539-101	. . . HARNESS ASSY, hydraulic generator shut-off *(see fig. 124)*	1	6701-6765
	852067-101	. . . HARNESS ASSY, hydraulic generator shut-off *(see fig. 124)*	1	6766-6790; 6831-
	852401-101	. . . HARNESS ASSY, ext power recp to T-62 terminal strip	1	6816-6830
	852304-101	. . . HARNESS ASSY, P312 to P-46 disc.	1	6791-6830
-15A	CA3100KE18-1S	. . . . CONNECTOR, (J309) recp (P-312 disc.) (71468)	1	6791-6830
	MS3057-10A	. . . . ADAPTER (96906)	1	6791-6830
	849566-101	. . HARNESS ASSY, LE flap "H" box *(see fig. 16)*	1	
	849561-101	. . HARNESS ASSY, grd crew interphone recp to P-87 plug *(see fig. 195)*	1	6701-6815; 6831-
	852399-101	. . HARNESS ASSY, grd crew interphone recp to P-87 plug *(see fig. 195)*	1	6816-6830
-16	MS3106K16S1S	. . . CONNECTOR, (P105) plug (P-87 disc.) (96906)	1	
	MS3057-8A	. . . ADAPTER (96906)	1	6816-
	850307-105	. . CONDUIT INSTL, electrical RH	1	

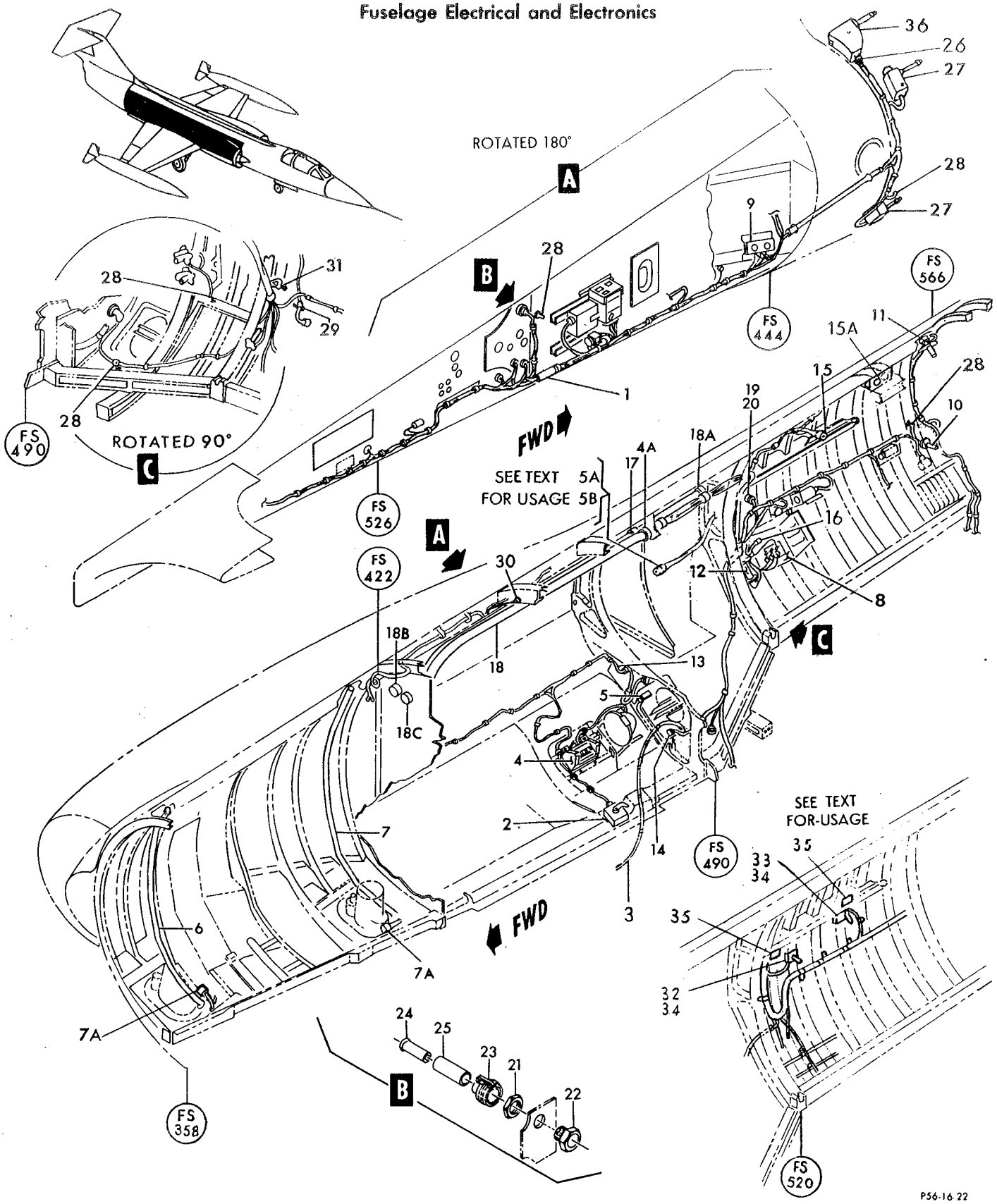

Figure 194— Right Hand Electrical Fuselage Station 358 to 614

Figura e particolare	NDR	1 2 3 4 5 6 7 DENOMINAZIONE	Quant.	Codice applicab.
194-17	784581-109	. . . CONDUIT, fus sta 422 to 489 fillet RH	1	
-18	784581-27	. . . CONDUIT, fus sta 422 to 489 main RH	1	
-18A	785387-1	. . . CONDUIT ASSY, fus sta 489 to 505 main RH	1	
-18B	785375-1	. . . NIPPLE, main RH conduit	1	
-18C	774510-1	. . . NIPPLE, RH fillet conduit	1	
-19	AN3066-6	. . NUT (88044)	1	
-20	AN3064-6	. . CONNECTOR, box (88044)	1	
-21	AN3066-10	. . NUT (88044)	1	
-22	AN3064-10	. . CONNECTOR, box (88044)	1	
-23	MS3057-10B	. . ADAPTER (96906)	1	
-24	AN3420-6A	. . BUSHING (88044)	1	
-25	AN3420-8A	. . BUSHING (88044)	1	
	849578-101	. . HARNESS ASSY, external power lockout switch to splice *(see fig. 195)*	1	6701-6815; 6831-
	852309-101	. . HARNESS ASSY, external power lockout switch to splice *(see fig. 195)*	1	6816-6830
	849517-101	. . HARNESS ASSY, inlet door actuator to RH fillet splice	1	
-26	MS3116P16-8S	. . . CONNECTOR, (P1) plug (RH inlet door lock actuator) (96906)	1	
-27	80B200	. . . SWITCH, (S172) DPDT spring return rotary actuator (RH inlet door open and closed) (98816) (Lockheed spec dwg 740418-101)	2	
-28	NAS1096-3-12	. . SCREW (grd stud) (80205)	5	
-29	NAS1096-3-12	. . SCREW (grd stud) (80205)	1	6741-
-30	NAS1096-3-16	. . SCREW (grd stud) (80205)	1	
-31	NAS604-16	. . SCREW (grd stud) (80205)	1	
	AN936A10	. . WASHER (grd stud) (88044)	6	
	AN936A10	. . WASHER (grd stud) (88044)	1	6741-
	AN936A416	. . WASHER (grd stud) (88044)	1	
	MS35337-43	. . WASHER (grd stud) (96906)	6	
	MS35337-43	. . WASHER (grd stud) (96906)	1	6741-
	MS35337-44	. . WASHER (grd stud) (96906)	1	
	AN345-10	. . NUT (grd stud) (88044)	6	
	AN345-10	. . NUT (grd stud) (88044)	1	6741-
	AN345-4R	. . NUT (grd stud) (88044)	1	
	AN960-10	. . WASHER (grd stud) (88044)	6	
	AN960-10	. . WASHER (grd stud) (88044)	1	6741-
	AN960-416	. . WASHER (grd stud) (88044)	1	
	MS21042L3	. . NUT (grd stud) (96906)	6	
	MS21042L3	. . NUT (grd stud) (96906)	1	6741-
	MS21042L4	. . NUT (grd stud) (96906)	1	
-32	773150-1	. . BRACKET ASSY, fire warning	1	6791-6830
-33	773304-1	. . BRACKET, fire warning	1	6791-6830
		Attaching Parts		
	NAS623-3-1	. . SCREW (80205)	2	6791-6830
	MS21042L3	. . NUT (96906)	2	6791-6830
		———————*———————		
-34	17343-11-450F	. . THERMOSWITCH, fire and overheat detector (73168) (Lockheed Spec dwg 650169-3)	2	6791-6830
		Attaching Parts		
	NAS623-3-1	. . SCREW (80205)	3	6791-6830
	MS21042L3	. . NUT (96906)	3	6791-6830
		———————*———————		
-35	776045-101	. . DECAL, fire detector space warning	2	6791-6830
-36	1107T100-7	. ACTUATOR, (B68) electro-mechanical (A2898) (98689) (Lockheed spec dwg 670977-107) (For spare replacement use 1107T100-9) *(see fig. 52 for reqd)*	REF	
	1107T100-9	. ACTUATOR, (B68) electro-mechanical (A2898) (98689) (Lockheed spec dwg 670977-109) (Spare replacement for 1107T100-7) *(see fig. 52 for reqd)*	REF	

Figura e particolare	NDR	1 2 3 4 5 6 7 DENOMINAZIONE	Quant.	Codice applicab.
		EXTERNAL POWER RECEPTACLE		
195	762024-101	STRUCTURE INSTL, external power recp *(see fig. 31 for reqd)*	REF	6701-6790; 6831-
	852565-103	A. STRUCTURE INSTL, external power recp *(see fig. 31 for reqd)*	REF	6791-6830
- 1	762035-101	BOX ASSY, external power recp	1	6701-6790; 6831-
	852565-105	A. BOX ASSY, external power recp	1	6791-6830
- 1B	852562-101	A. . PANEL, external power recp box side	1	6791-6830
- 1C	852792-101	A. . PANEL, external power recp box side	1	6791-6830
- 1D	852564-101	A. . PANEL, external power recp box top	1	6791-6830
- 1E	852796-101	A. . BRACKET, lockout external power switch	1	6791-6830
- 1F	768003-1	A. . DECAL, external power cavity warning	1	6791-6830
- 2	762033	HINGE, external power recp door	1	6701-6790; 6831-
- 3	762032	SPACER, external power recp door hinge	1	6701-6790; 6831-
		Attaching Parts		
- 4	AN507-1032R12	SCREW (88044)	1	6701-6790; 6831-
- 5	AN960D10	WASHER (88044)	1	6701-6790; 6831-
- 6	MS21042L3	NUT (96906)	1	6701-6790; 6831-
		*		
- 7	762034	RETAINER, external power recp door	1	6701-6790; 6831-
- 8	762058	PLATE, external power recp door latch catch	1	6701-6790; 6831-
- 9	762059	CHANNEL, door catch plate	1	6701-6790; 6831-
-10	764744	PLATE, door latching	1	6701-6790; 6831-
-10A	799978-101	BRACKET, external cart switch	1	6701-6790; 6831-
-10B	852566-101	A. BRACKET, external power recp cover	1	6791-6830
	762024-103	DOOR INSTL, external power recp *(see fig. 31 for reqd)*	REF	6701-6790; 6831-
	852547-101	A. DOOR INSTL, external power recp *(see fig. 31 for reqd)*	REF	6791-6830
-11	762037	PIN, door hinge	1	6701-6790; 6831-
-11A	852607-101	A. PIN, external power recp hinge	1	6791-6830
-11B	852616-101	A. SUPPORT, external power supply	1	6791-6830
-11C	852617-101	A. . CLAMP, external power supply	2	6791-6830
		Attaching Parts		
-11D	NAS1203-8	A. SCREW (80205)	1	6791-6830
-11E	NAS1203-9	A. SCREW (80205)	2	6791-6830
-11F	NAS43DD3-12	A. SPACER (80205)	1	6791-6830
-11G	AN960D10	A. WASHER (88044)	3	6791-6830
-11H	MS21042L3	A. NUT (96906)	3	6791-6830
		*		
-11I	852610-101	A. HINGE, external power recp	1	6791-6830
-11L	852605-101	A. SPACER, external power recp hinge	1	6791-6830
-11M	852608-101	A. SUPPORT, external power recp	1	6791-6830
-11N	852618-101	A. PLATE, support adjustment	1	6791-6830
-11O	852609-101	A. PLATE, external power recp	1	6791-6830
-11P	852612-101	A. PLATE, external power recp	1	6791-6830
-12	762025-101	A. DOOR ASSY, external power recp	1	6701-6790; 6831-
-12A	852611-101	A. DOOR ASSY, external power recp	1	6791-6830
-13	762025-5	. . PIN, hinge	1	
-14	761671	. . SPRING, external power recp door	1	
-15	762026	. . HINGE, external power recp door	1	6701-6790; 6831-
-15A	852606-101	A. . HINGE, external power recp	1	6791-6830
-16	726143-101	. . LATCH ASSY, external power recp door	1	
		Attaching Parts		
-17	AN507-632R8	. . SCREW (88044)	4	6701-6790; 6831-
-17A	NAS514P632-8	. . SCREW (80205)	4	6791-6830
-18	AN960D6	. . WASHER (88044)	4	
-19	MS21042L06	. . NUT (96906)	4	
		*		
-20	MS24665-287	. . . PIN, external power recp door (96906)	1	
-21	MS24665-291	. . . PIN, external power recp door (96906)	1	
-22	726144	. . . SPRING, external power recp door	1	
-23	762028	. . . BOLT ASSY, external power recp door	1	
-24	762029	. . . LEVER, external power recp door	1	

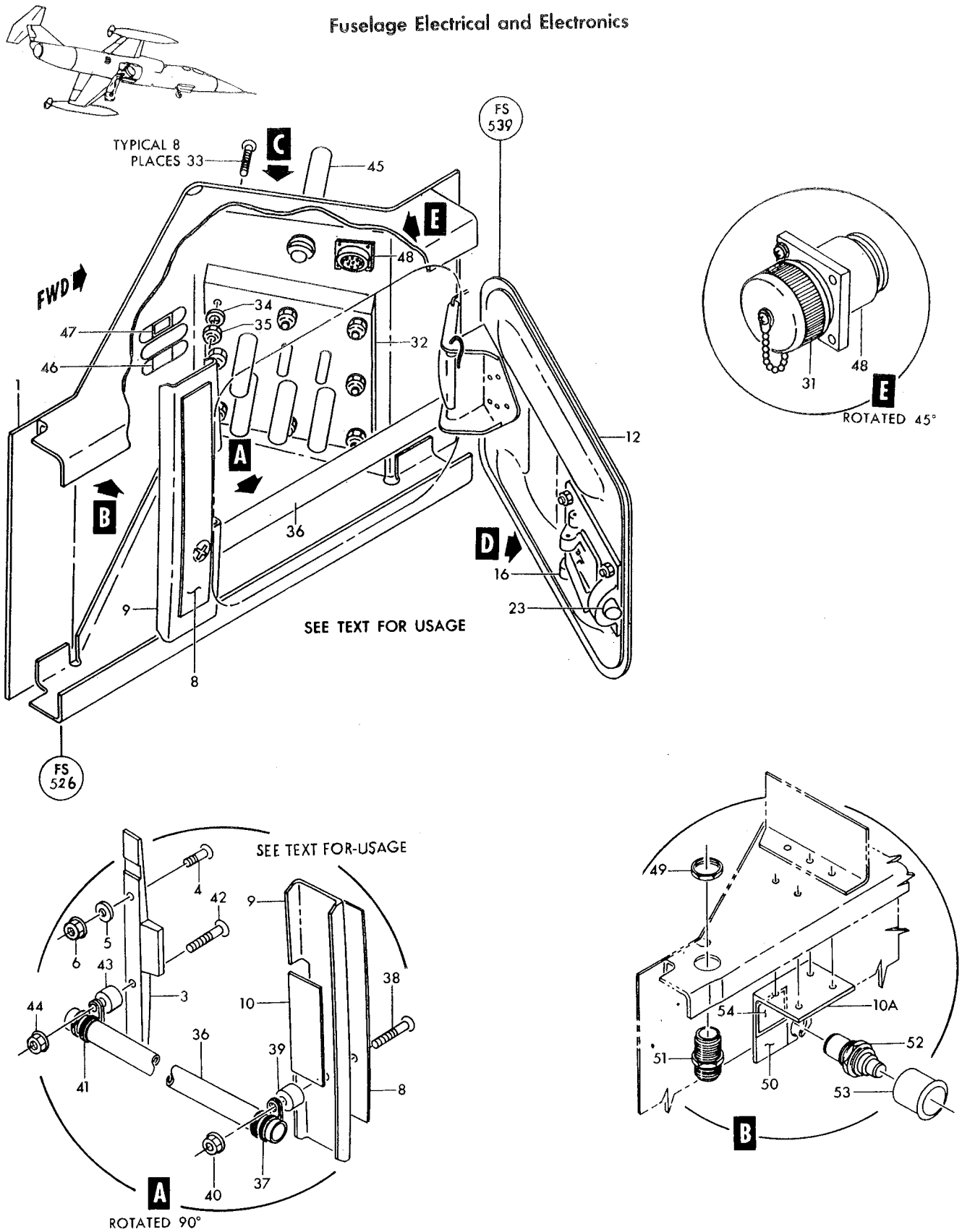

Figure 195—External Power Receptacle (Sheet 1 of 3)

Fuselage Electrical and Electronics

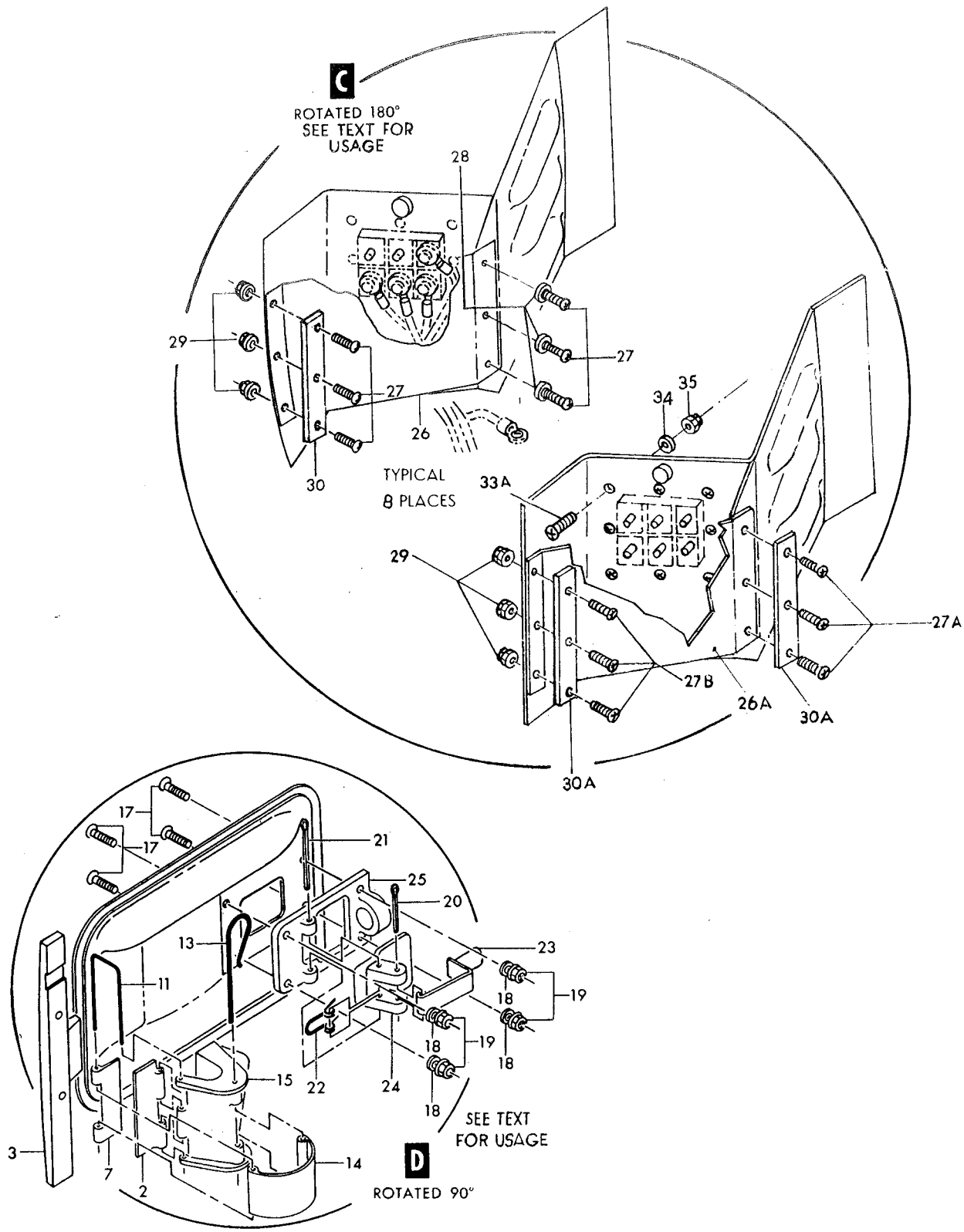

Figure 195—External Power Receptacle (Sheet 2 of 3)

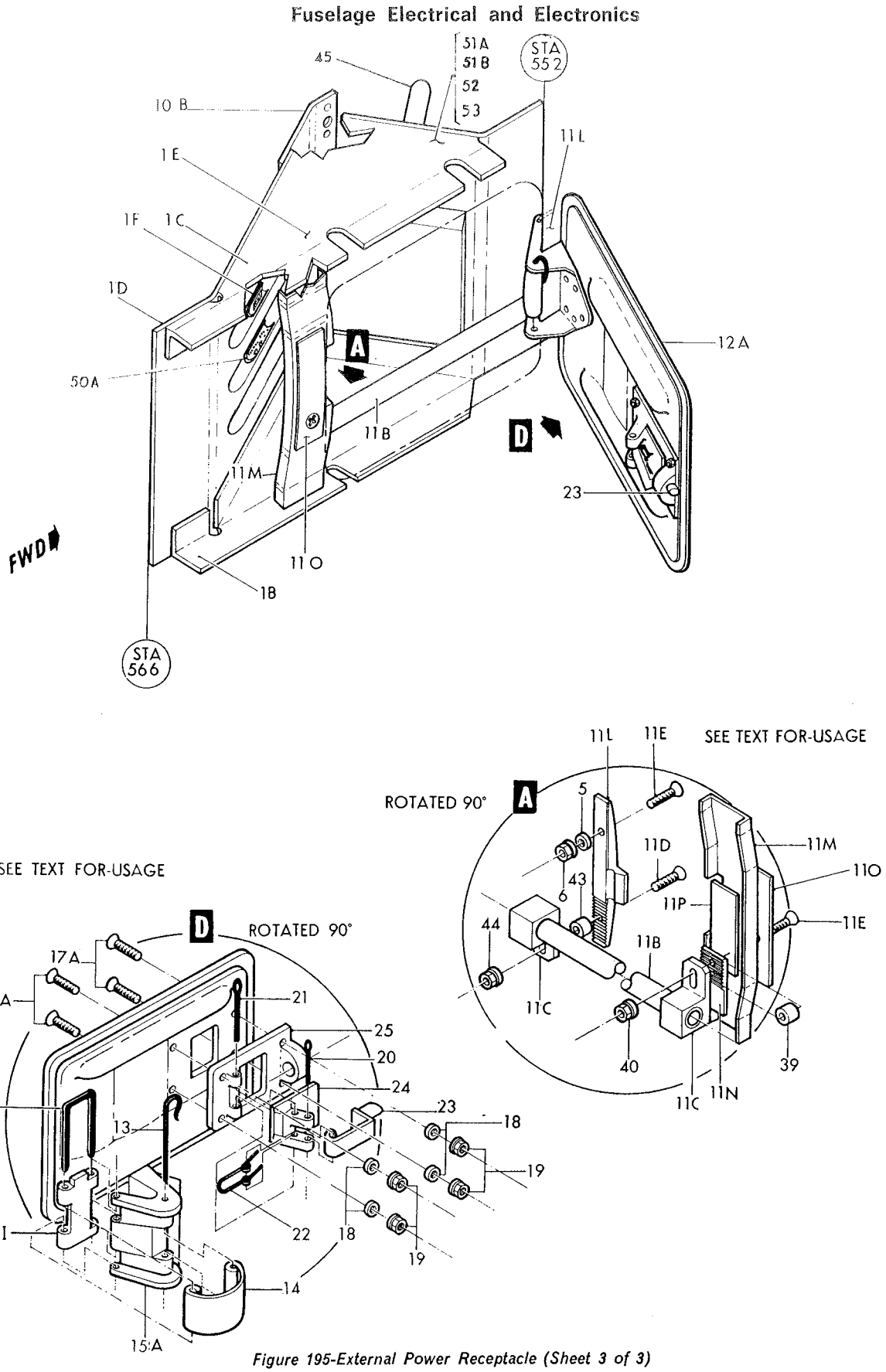

Figure 195-External Power Receptacle (Sheet 3 of 3)

Figura e particolare	NDR	1 2 3 4 5 6 7	DENOMINAZIONE	Quant.	Codice applicab.
195-25	762031		BASE, external power recp door	1	
	762024-501		RECEPTACLE INSTL, (J72) external power *(see fig. 194 for reqd)*	REF	6701-6790; 6831-
	852565-107		RECEPTACLE INSTL, (J72) external power *(see fig. 194 for reqd)*	REF	6791-6830
-26	762030		COVER ASSY, external power recp	1	6701-6790; 6831-
-26A	852567-101		COVER, external power recp	1	6791-6830
			Attaching Parts		
-27	AN520-10R8		SCREW (88044)	6	6701-6790; 6831-
-27A	NAS623-3-2		SCREW (80205)	3	6791-6830
-27B	NAS623-3-3		SCREW (80205)	3	6791-6830
-28	AN960D10		WASHER (88044)	3	6701-6790; 6831-
-29	MS21042L3		NUT (96906)	3	
-30	762083		RETAINER, external power recp cover	1	6701-6790; 6831-
-30A	762083		RETAINER, external power recp cover	2	6791-6830
-31	MS25043-16C		CAP, dust (96906)	1	
-32	AN3114-1B		CONNECTOR, recp (external power) (88044)	1	
			Attaching Parts		
-33	AN520-10R16		SCREW (88044)	8	6701-6790; 6831-
-33A	NAS623-3-9		SCREW (80205)	8	6791-6830
-34	AN960D10		WASHER (88044)	8	
-35	MS21042L3		NUT (96906)	8	
-36	761665		TUBE, external power recp guard	1	6701-6790; 6831-
-37	MS21919DG8		CLAMP (96906)	1	6701-6790; 6831-
			Attaching Parts		
-38	AN507-1032R16		SCREW (88044)	1	6701-6790; 6831-
-39	LS607-12		SPACER, phenolic (36659)	1	6701-6790; 6831-
-40	MS21042L3		NUT (96906)	1	6701-6790; 6831-
-41	MS21919DG8		CLAMP (96906)	1	6701-6790; 6831-
			Attaching Parts		
-42	AN507-1032R16		SCREW (88044)	1	6701-6790; 6831-
-43	LS607-8		SPACER, phenolic (36659)	1	6701-6790; 6831-
-44	MS21042L3		NUT (96906)	1	6701-6790; 6831-
	768264-1		HARNESS ASSY, phase sequence indicator to external power recp	1	
-45	84-100		LIGHT ASSY, (DS25) phase sequence indicator (A2836) (96182) (Lockheed spec dwg 619166-3)	1	
-46	847133-101		DECAL, external power recp	1	
-47	768003-1		DECAL, external power cavity warning	1	6701-6790; 6831-
	849561-101		HARNESS ASSY, grd crew interphone recp to P-87 plug *(see fig. 194 for reqd)*	REF	6701-6815; 6831-
	852399-101		HARNESS ASSY, grd crew interphone recp to P-87 plug *(see fig. 194 for reqd)*	REF	6816-6830
-48	MS3100K16S1S		CONNECTOR, (J73) recp (ground crew) (96906)	1	
	MS3057-8A		ADAPTER (96906)	1	
	846024-101		ELECTRICAL INSTL, external cart area switch *(see fig. 31 for reqd)*	REF	6701-6790; 6816-
	852810-101	A.	ELECTRICAL INSTL, external power recp area switch *(see fig. 31 for reqd)*	REF	6791-6815
-49	AN3066-4		NUT (88044)	1	6701-6790; 6816-
-50	799979-101		DECAL, external cart	1	
-50A	846084-101	A.	DECAL, external cart switch wiring	1	6791-6815
	849578-101		HARNESS ASSY, external power lockout switch to splice *(see fig. 194 for reqd)*	REF	6701-6790; 6831-
	852309-101		HARNESS ASSY, external power lockout switch to splice *(see fig. 194 for reqd)*	REF	6791-6830
-51	AN3058-4		COUPLING (88044)	1	6701-6790; 6831-
-51A	AN3058-6		COUPLING (88044)	1	6791-6830
-51B	AN3066-6		NUT (88044)	1	6791-6830
-52	W103D3		SWITCH, (S145) push button (external power lockout) (99707) (Lockheed spec dwg 612703-10)	1	
-53	A120-071		GUARD, push button switch (81640) (Lockheed spec dwg 619302-1)	1	
-54	846084-101		DECAL, external cart switch wiring	1	

A - Only per partial incorporation of SPU system

Figura e particolare	NDR	1 2 3 4 5 6 7 DENOMINAZIONE	Quant.	Codice applicab.
		FIRE WARNING DETECTORS		
196	763567-5	. DETECTOR INSTL, fus sta 520 fire warning *(see fig. 193 for reqd)* . . .	REF	
- 1	763661	. . BRACKET, fire warning	2	
		Attaching Parts		
	NAS623-3-5	. . SCREW (80205)	2	
	AN960C10	. . WASHER (88044)	4	
	MS21042L3	. . NUT (96906)	2	
		——————☼——————		
	764977	. . BRACE, fire warning bracket	2	
- 2	17343-11-450F	. . THERMOSWITCH, (S22) fire and overheat detector (73168) (Lockheed spec dwg 650169-3)	2	
		Attaching Parts		
	NAS623-3-1	. . SCREW (80205)	3	
	MS21042L3	. . NUT (96906)	3	
		——————☼——————		
- 3	776045-1	. . DECAL, fire detector space warning	2	
	763523	. DETECTOR INSTL, fus sta 539 fire warning *(see fig. 193 for reqd)* . . .	REF	
- 4	763517	. . BRACKET, fire warning	1	
		Attaching Parts		
	NAS623-3-1	. . SCREW (80205)	2	
	MS21042L3	. . NUT (96906)	2	
		——————☼——————		
	764796	. . BRACE, fire warning bracket	1	
- 5	17343-11-450F	. . THERMOSWITCH, (S22) fire and overheat detector (73168) (Lockheed dwg 650169-3)	1	
		Attaching Parts		
	NAS623-3-1	. . SCREW (80205)	3	
	MS21042L3	. . NUT (96906)	3	
		——————☼——————		
- 6	776045-1	. . DECAL, fire detector space warning	1	
	763525-3	. DETECTOR INSTL, fus sta 572 fire warning *(see fig. 193 for reqd)* . . .	REF	
- 7	773239-1	. . BRACKET, fire warning	1	
		Attaching Parts		
	NAS623-3-1	. . SCREW (80205)	2	
	MS21042L3	. . NUT (96906)	2	
		——————☼——————		
	767993-1	. . BRACE, fire warning bracket	1	
		Attaching Parts		
	NAS623-3-1	. . SCREW (80205)	1	
	MS21042L3	. . NUT (96906)	1	
		——————☼——————		
- 8	17343-11-450F	. . THERMOSWITCH, (S22) fire and overheat detector (73168) (Lockheed spec dwg 650169-3)	1	
		Attaching Parts		
	NAS623-3-1	. . SCREW (80205)	3	
	MS21042L3	. . NUT (96906)	3	
		——————☼——————		
- 9	776045-1	. . DECAL, fire detector space warning	1	
	791640-1	. DETECTOR INSTL, fus sta 586 fire warning *(see fig. 192 for reqd)* . . .	REF	
-10	791650-1	. . BRACKET ASSY, fire warning	1	
-11	17343-11-450F	. . THERMOSWITCH, (S22) fire and overheat detector (73168) (Lockheed spec dwg 650169-3)	1	
		Attaching Parts		
	NAS623-3-1	. . SCREW (80205)	3	
	MS21042L3	. . NUT (96906)	3	
		——————☼——————		
-12	776045-1	. . DECAL, fire detector space warning	1	
	763567-3	. DETECTOR INSTL, fus sta 520 fire warning *(see fig. 192 for reqd)* . . .	REF	
-13	773150-1	. . BRACKET ASSY, fire warning	1	

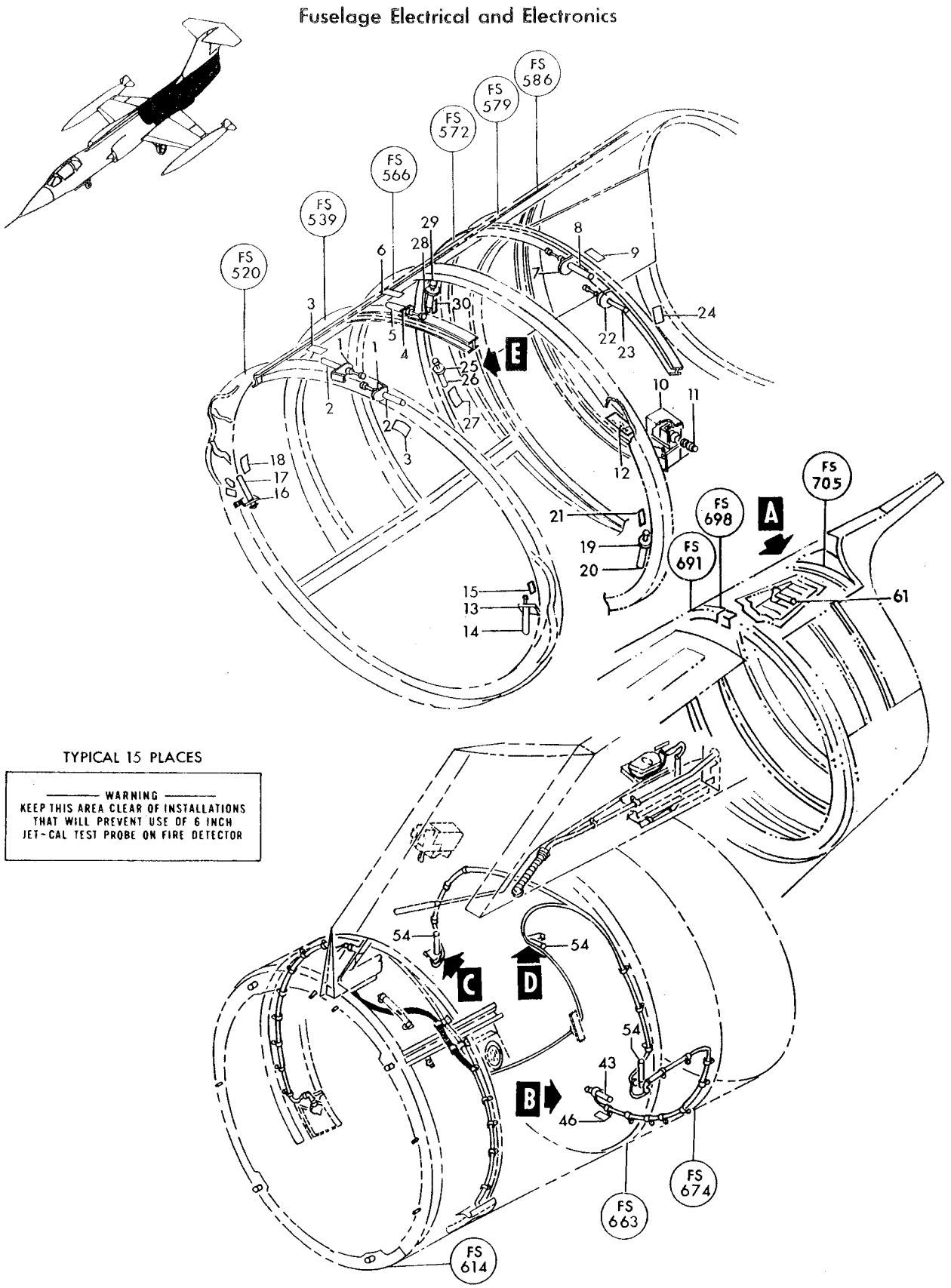

P56-6-446-1

Figure 196—Fire Warning Detectors (Sheet 1 of 2)

Fuselage Electrical and Electronics

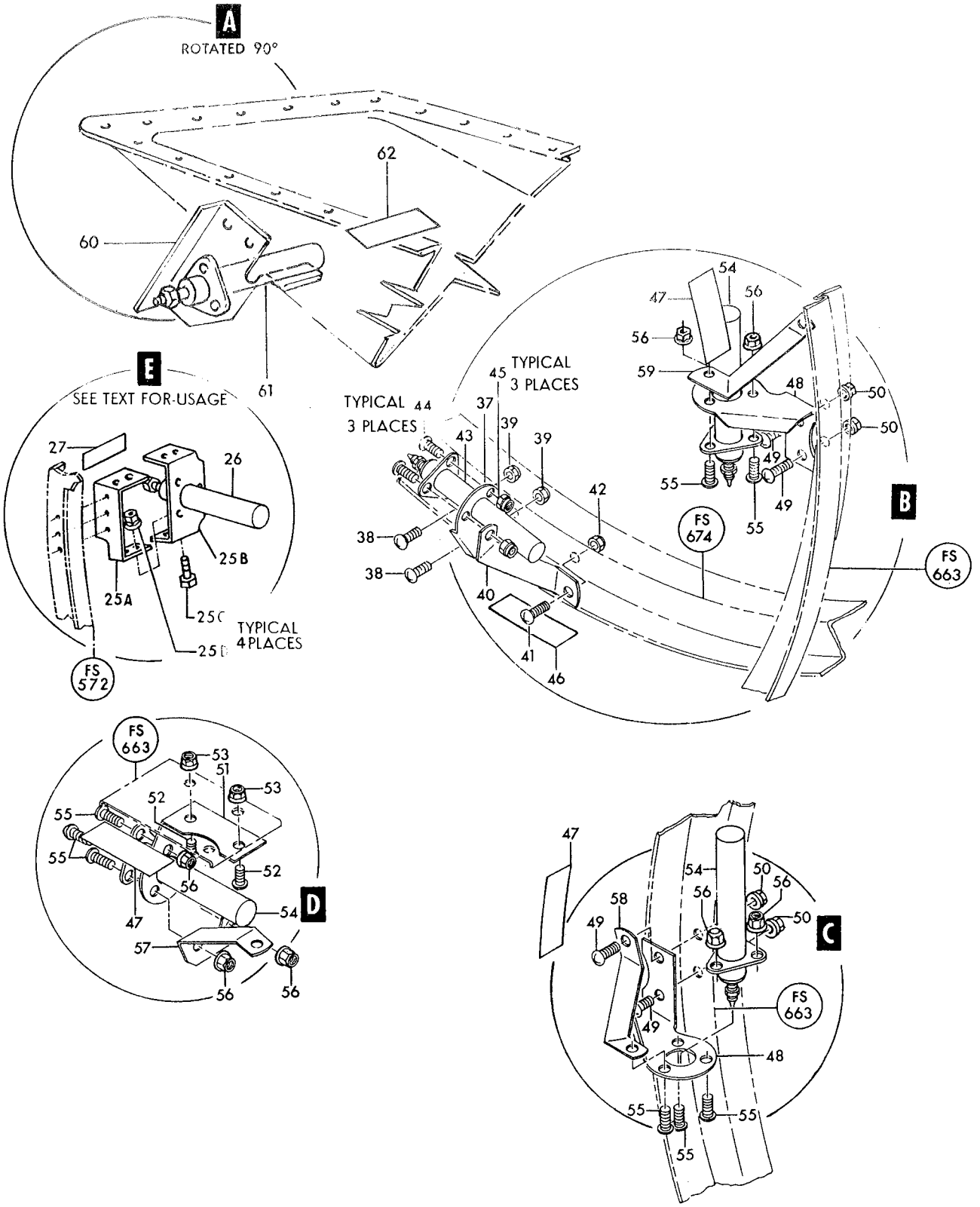

P56-6-446-2

Figure 196 — Fire Warning Detectors (Sheet 2 of 2)

Figura e particolare	NDR	DENOMINAZIONE 1 2 3 4 5 6 7	Quant.	Codice applicab.
		Attaching Parts		
196	NAS623-3-3	SCREW (80205)	2	
	MS21042L3	NUT (96906)	2	
-14	17343-11-450F	THERMOSWITCH, (S22) fire and overheat detector (73168) (Lockheed spec dwg 650169-3)	1	
		Attaching Parts		
	NAS623-3-1	SCREW (80205)	3	
	MS21042L3	NUT (96906)	3	
-15	776045-1	DECAL, fire detector space warning	1	
	763567-4	DETECTOR INSTL, fus sta 520 fire warning *(see fig. 194 for reqd)*	REF	6701-6790; 6831-
-16	773150-3	BRACKET ASSY, fire warning	1	6701-6790; 6831-
		Attaching Parts		
	NAS623-3-3	SCREW (80205)	2	6701-6790; 6831-
	MS21042L3	NUT (96906)	2	6701-6790; 6831-
-17	17343-11-450F	THERMOSWITCH, (S22) fire and overheat detector (73168) (Lockheed spec dwg 650169-3)	1	6701-6790; 6831-
		Attaching Parts		
	NAS623-3-1	SCREW (80205)	3	6701-6790; 6831-
	MS21042L3	NUT (96906)	3	6701-6790; 6831-
-18	776045-1	DECAL, fire detector space warning	1	6701-6790; 6831-
	850933-101	DETECTOR INSTL, fus sta 566 fire warning *(see fig. 192 for reqd)*	REF	6701-6790; 6831-
	852353-101	DETECTOR INSTL, fus sta 566 fire warning *(see fig. 192 for reqd)*	REF	6791-6830
-19	763517	BRACKET, fire warning	1	6701-6790; 6831-
	763661	BRACKET, fire warning	1	6791-6830
		Attaching Parts		
	NAS1096-3-7	SCREW (80205)	2	
	MS21042L3	NUT (96906)	2	
	764796	BRACE, fire warning bracket	1	6701-6790; 6831-
	764977	BRACE, fire warning bracket	1	6791-6830
-20	17343-11-450F	THERMOSWITCH, (S22) fire and overheat detector (73168) (Lockheed spec dwg 650169-3)	1	
		Attaching Parts		
	NAS1096-3-7	SCREW (80205)	3	
	MS21042L3	NUT (96906)	3	
-21	776045-1	DECAL, fire detector space warning	1	
	763525-5	DETECTOR INSTL, fus sta 573 fire warning *(see fig. 192 for reqd)*	REF	
-22	767992-1	BRACKET, fire warning	1	
		Attaching Parts		
	NAS623-3-1	SCREW (80205)	2	
	MS21042L3	NUT (96906)	2	
	773264-1	BRACE, fire warning bracket	1	
-23	17343-11-450F	THERMOSWITCH, (S22) fire and overheat detector (73168) (Lockheed spec dwg 650169-3)	1	
		Attaching Parts		
	NAS623-3-1	SCREW (80205)	3	
	MS21042L3	NUT (96906)	3	
-24	776045-1	DECAL, fire detector space warning	1	
	763525-11	DETECTOR INSTL, fus sta 573 fire warning *(see fig. 194 for reqd)*	REF	6701-6790; 6831-
	763525-101	DETECTOR INSTL, fus sta 573 fire warning *(see fig. 194 for reqd)*	REF	6791-6830
-25	773304-1	BRACKET, fire warning	1	6701-6790; 6831-
		Attaching Parts		
	NAS623-3-1	SCREW (80205)	2	6701-6790; 6831-

Figura e particolare	NDR	DENOMINAZIONE 1 2 3 4 5 6 7	Quant.	Codice applicab.
196	MS21042L3	NUT (96906)	2	6701-6790; 6831-
	773303-1	BRACE, fire warning bracket	1	6701-6790; 6831-
		Attaching Parts		
	NAS623-3-1	SCREW (80205)	1	6701-6790; 6831-
	MS21042L3	NUT (96906)	1	6701-6790; 6831-
-25A	852808-101	BRACKET, fus sta 573 fire detector mounting	1	6791-6830
-25B	852809-101	COVER, fas sta 573 fine detector mounting	1	6791-6830
		Attaching Parts		
-25C	NAS1096-3-8	SCREW (80205)	4	6791-6830
-25D	MS21042L3	NUT (96906)	4	6791-6830
-26	17343-11-450F	THERMOSWITCH, (S22) fire and overheat detector (73168) (Lockheed spec dwg 650169-3)	1	
		Attaching Parts		
	NAS623-3-1	SCREW (80205)	3	
	MS21042L3	NUT (96906)	3	
-27	776045-1	DECAL, fire detector space warning	1	
	763525-7	DETECTOR INSTL, fus sta 573 fire warning *(see fig. 194 for reqd)*	REF	
-28	773304-1	BRACKET, fire warning	1	
		Attaching Parts		
	NAS623-3-1	SCREW (80205)	2	
	MS21042L3	NUT (96906)	2	
	773303-1	BRACE, fire warning bracket	1	
		Attaching Parts		
	NAS623-3-1	SCREW (80205)	1	
	MS21042L3	NUT (96906)	1	
-29	17343-11-450F	THERMOSWITCH, (S22) fire and overheat detector (73168) (Lockheed spec dwg 650169-3)	1	
		Attaching Parts		
	NAS623-3-1	SCREW (80205)	3	
	MS21042L3	NUT (96906)	3	
-30	776045-1	DECAL, fire detector space warning	1	
	763638-101	DETECTOR INSTL, fus sta 674 fire warning *(see fig. 32 for reqd)*	REF	
-37	763517	BRACKET, fire warning	1	
		Attaching Parts		
-38	NAS221-8	SCREW (80205)	2	
-39	AN363C1032	NUT (88044)	2	
-40	764795	BRACE, fire warning bracket	1	
		Attaching Parts		
-41	NAS221-8	SCREW (80205)	1	
-42	AN363C1032	NUT (88044)	1	
-43	17343-11-750F	THERMOSWITCH, (S167) fire and overheat detector (73168) (Lockheed spec dwg 650169-101)	1	
		Attaching Parts		
-44	NAS221-8	SCREW (80205)	3	
-45	AN363C1032	NUT (88044)	3	
-46	776045-1	DECAL, fire detector space warning	1	
	775030-101	DETECTOR INSTL, fus sta 663 fire warning *(see fig. 32 for reqd)*	REF	
-47	776045-1	DECAL, fire detector space warning	3	
-48	763517	BRACKET, fire warning	2	

Figura e particolare	NDR	DENOMINAZIONE 1 2 3 4 5 6 7	Quant.	Codice applicab.
		Attaching Parts		
196-49	NAS623-3-2	SCREW (80205)	2	
-50	MS21042L3	NUT (96906)	2	
-51	763430	BRACKET, overheat detector	1	
		Attaching Parts		
-52	NAS623-3-2	SCREW (80205)	2	
-53	MS21042L3	NUT (96906)	2	
-54	17343-11-750F	THERMOSWITCH, (S167) fire and overheat detector (73168) (Lockheed spec dwg 650169-101)	3	
		Attaching Parts		
-55	NAS623-3-2	SCREW (80205)	3	
-56	MS21042L3	NUT (96906)	3	
-57	764798	BRACE, fire warning bracket	1	
-58	764796	BRACE, fire warning bracket	1	
-59	764795	BRACE, fire warning bracket	1	
		Attaching Parts		
	NAS623-3-2	SCREW (80205)	1	
	MS21042L3	NUT (96906)	1	
	851086-101	DETECTOR INSTL, fuselage station 698 fire warning *(see fig. 32 for reqd)*	REF	
-60	851085-101	BRACKET, fire warning	1	
-61	17343-11-750F	THERMOSWITCH, (S167) fire and overheat detector (73168) (Lockheed spec dwg 650169-101)	1	
		Attaching Parts		
	LS9682C6	BOLT (36659)	3	
	MS21042L3	NUT (96906)	3	
-62	776045-1	DECAL, fire detector space warning	1	

Figura e particolare	NDR	1	2	3	4	5	6	7	DENOMINAZIONE	Quant.	Codice applicab.
									AFT FUSELAGE ELECTRICAL AND SIGNAL HORN ANTENNA		
197	784621-1								DETECTOR INSTL, vertical stabilizer magnetic azimuth *(see fig. 32 for reqd)*	REF	
- 1	620359								DETECTOR, (TR1) magnetic azimuth (A0307) (07187) (Lockheed spec dwg 620687-1) (see T.O. 5N12-2-6-4)	1	
- 2	620783								COMPENSATOR, (TR1) magnetic azimuth (A0307) (07187) (Lockheed spec dwg 620687-3) (see T.O. 5N12-2-0-4)	1	
- 3	785536-1								DECAL, magnetic azimuth detector	1	
- 4	AN515B8R14								SCREW (88044)	3	
- 5	AN960B8								WASHER (88044)	3	
- 6	792798-1								DECAL, vertical stabilizer detector wiring	1	
	849921-101								ELECTRICAL INSTL, aft fus *(see fig. 32 for reqd)*	REF	
- 7	849510-101								HARNESS ASSY, tail section equipment wiring *(see fig. 26)*	1	6701-6815
	852324-101								HARNESS ASSY, tail section equipment *(see fig. 26)*	1	6816-
- 8	CA06KE14S5S								CONNECTOR, (P106) plug (P-14 disc.) (71468)	1	6701-6815
	CA3106K14S5S								CONNECTOR, (P106) plug (P-14 disc.) (71468)	1	6816-
	MS3057-6A								ADAPTER (96906)	1	6816-
- 9	CA06KE24-28PW								CONNECTOR, (P108) plug (P-16 disc.) (71468)	1	
-10	CA06KE24-28P								CONNECTOR, (P107) plug (P-15 disc.) (71468)	1	
-11	CA3108KE20-27S								CONNECTOR, (P446) plug (P-31 disc.) (71468)	1	
	MS3057-12A								ADAPTER (96906)	1	
-12	CA3106KE10SL4S								CONNECTOR, (P109) plug (P-128 disc.) (71468)	1	
	851073-101								HARNESS ASSY, bhd 614 to divider signal horn antenna	1	6701-6815
	852389-101								HARNESS ASSY, bhd 614 to divider signal horn antenna	1	6816-
-13	UG1185A/U								CONNECTOR, (P17) plug (bhd 614 and divider) (80058)	2	
	Z158	C.							GRIP (04073)	2	
	851074-101								HARNESS ASSY, divider to left signal horn antenna	1	6701-6815
	852388-101								HARNESS ASSY, divider to left signal horn antenna	1	6816-
-14	UG1185A/U								CONNECTOR, (P17) plug (divider and left horn antenna) (80058)	2	
	Z158	C.							GRIP (04073)	2	
	851075-101								HARNESS ASSY, divider to right signal horn antenna	1	6701-6815
	852387-101								HARNESS ASSY, divider to right signal horn antenna	1	6816-
-15	UG1185A/U								CONNECTOR, (P17) plug (divider and right horn ant.) (80058)	2	
	Z158	C.							GRIP (04073)	2	
-16	107154A1	A.							DIVIDER, (J308) power coaxial radio frequency (A1615) (Alternate to 50043-5022) (Lockheed spec dwg 740408-101) (see AA. 11-128577A1-4)	1	
	50043-5022	A.							DIVIDER, (J308) power coaxial radio frequency (49956) (Lockheed spec dwg 740408-101) (Alternate to 107154A1)	REF	
-17	NAS1096-3-16								SCREW (grd stud) (80205)	1	
	AN936A10								WASHER (grd stud) (88044)	1	
	MS35337-43								WASHER (grd stud) (96906)	1	
	AN345-10								NUT (grd stud) (88044)	1	
	AN960-10								WASHER (grd stud) (88044)	1	
	MS21042L3								NUT (grd stud) (96906)	1	
	849921-103								ELECTRICAL INSTL, fin assy *(see fig. 21 for reqd)*	REF	
-18	849509-101								HARNESS ASSY, tail section P-31 disc. to rudder control *(see fig. 28)*	1	
-19	CA00KE20-27P								CONNECTOR, (J214) recp (P-31 disc.) (71468)	1	
-20	NAS514P1032-12								SCREW (grd stud) (80205)	3	
	MS35337-43								WASHER (grd stud) (96906)	3	
	AN345-10								NUT (grd stud) (88044)	3	
	AN960-10								WASHER (grd stud) (88044)	3	
	MS21042L3								NUT (grd stud) (96906)	3	
-21	AN520C10R16								SCREW (grd stud) (88044)	2	
	MS35338-138								WASHER (grd stud) (96906)	4	
	AN345C10								NUT (grd stud) (88044)	2	
	AN960C10								WASHER (grd stud) (88044)	2	
	MS21043-3								NUT (grd stud) (96906)	2	
-22	AN3064-3								BOX CONNECTOR (88044)	1	
-23	AN3066-3								NUT (88044)	1	
-24	MS25036-2								LUG (96906)	1	
-25	UG30D/U								ADAPTER, (J148) (bhd 614) (80058)	1	

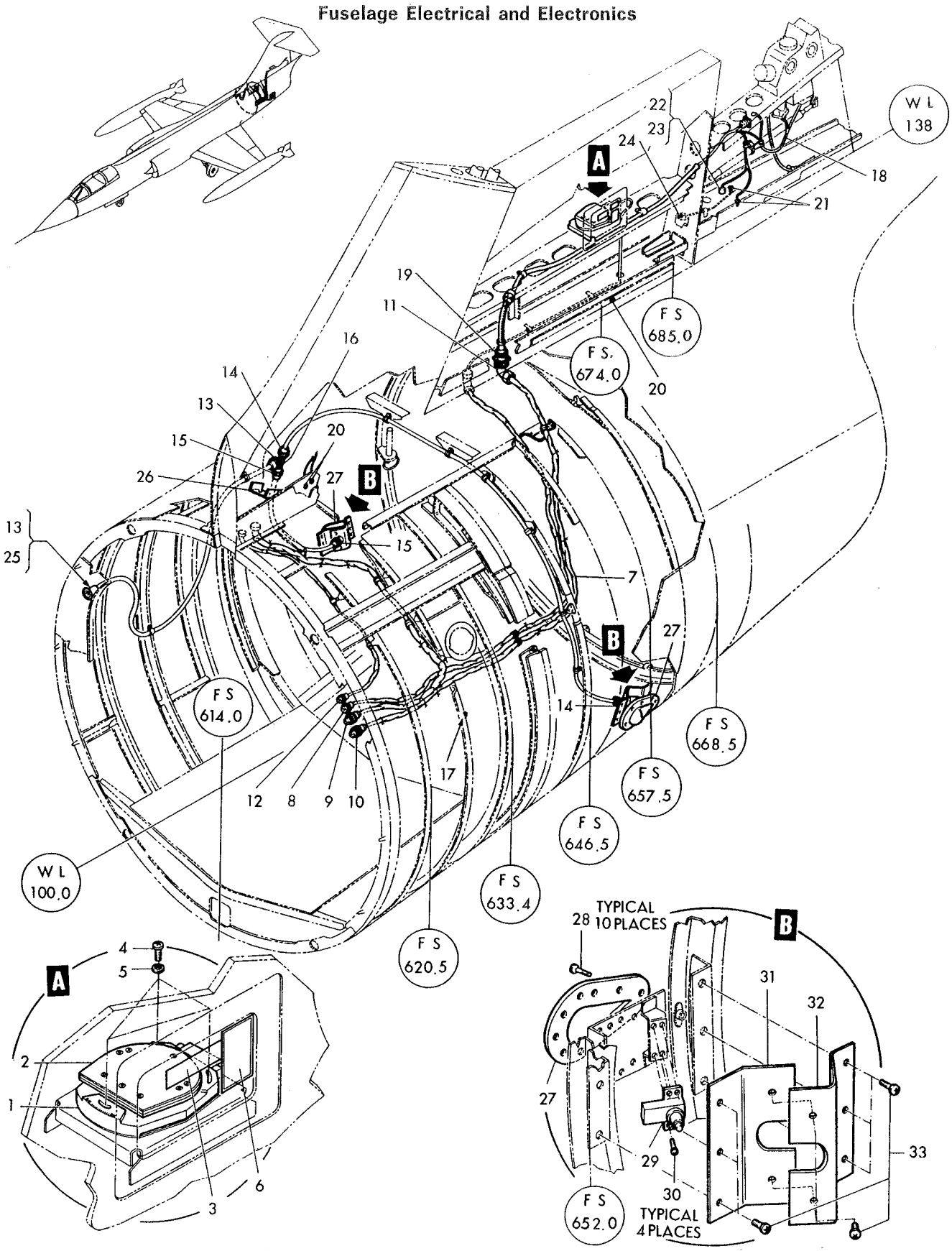

Figure 197–Aft Fuselage Electrical and Signal Horn Antennas

Figura e particolare	NDR	1 2 3 4 5 6 7 DENOMINAZIONE	Quant.	Codice applicab.
197	849921-105	. ELECTRICAL INSTL, final fin assembly *(see fig. 32 for reqd)*	REF	
-26	788407-1	. . BRACKET	1	
		Attaching Parts		
	NAS514P1032-8	. . SCREW (80205)	4	
		———————☼———————		
	851012-101	. ANTENNA INSTL, aft fuselage rear signal horn *(see fig. 32 for reqd)* . .	REF	
	851012-102	. ANTENNA INSTL, aft fuselage rear signal horn *(see fig. 32 for reqd)* . .	REF	
-27	851011-101	B. . COVER, antenna	1	
		Attaching Parts		
-28	NAS1203-3	. . SCREW (80205)	10	
		———————☼———————		
-29	107153A1	A. . HORN, rear CW signal antenna radio frequency AIM-7E (A1615) (Alternate to 50043-5020) (see AA.11-128577A1-4) (Lockheed spec dwg 740416-101)	1	
	50043-5020	A. . HORN, rear CW signal antenna radio frequency AIM-7E (49956) (Lockheed spec dwg 740416-101) (Alternate to 107153A1) (see sep pub. whn avail.)	REF	
		Attaching Parts		
-30	NAS601-6	. . SCREW (80205)	4	
		———————☼———————		
-31	851007-101	. . HEAT SHIED - FWD	1	
-32	851008-101	. . HEAT SHIELD - AFT	1	
		Attaching Parts		
-33	NAS623-3-1	. . SCREW (80205)	8	
		———————☼———————		

A - Only AWX
B - Modified per AA. 1F-104S-OT-130A
C - Reqd per AA.1F-104-OT-797

Figura e particolare	NDR	1 2 3 4 5 6 7 DENOMINAZIONE	Quant.	Codice applicab.
		EXTERNAL LIGHTS		
198- 1	778663-105	B. LIGHT INSTL, fus sta 237 lower navigation *(see fig. 62 for reqd)*	REF	
- 2	619165-7	B. . LENS, DS38) navigation light white (A0307) (97925)	1	6701-6815
- 3	MS35478-1680	B. . LAMP, (DS38) (96906)	1	6701-6815
	762911-101	B. . SOCKET SUPPORT ASSY, (DS38) fus sta 237 bottom light	1	6701-6815
- 4	762911-3	B. . . SOCKET SUPPORT, fus sta 237 bottom light	1	6701-6815
- 5	A43950	B. . . LAMPHOLDER, (DS26) bayonet type (A1587) (alternate to A7518)	1	6701-6815
	A7518	B. . . LAMPHOLDER, (DS26) bayonet type (72914) (Lockheed spec dwg 610097-3) (alternate to A43950)	REF	6701-6815
		Attaching Parts		
	AN515-6R6	B. . . SCREW (88044)	2	6701-6815
	AN960D6	B. . . WASHER (88044)	4	6701-6815
	MS21042L3	B. . . NUT (96906)	2	6701-6815
- 6	778662-1	B. . HOUSING ASSY, fus sta 237 light	1	6701-6815
- 7	AN3054-6	B. . NUT (88044)	1	6701-6815
- 8	AN3067W3	B. . WASHER (88044)	1	6701-6815
- 9	AN3067S2	B. . SEAL (88044)	1	6701-6815
-10	AN3066-6	B. . NUT (88044)	1	6701-6815
-11	AN3064-6	B. . BOX CONNECTOR (88044)	1	6701-6815
-12	778661-1	B. . RING, fus sta 237 lower light	1	6701-6815
-13	761468-3	B. . SPACER, fus sta 237 lower light	4	6701-6815
-14	778796-1	B. . HARNESS ASSY, bottom fus light to quick disc.	1	6701-6815
-15	14371-0002	B. . . CONNECTOR, (J17) recp (P-83 quick disc.) (08524)	1	6701-6815
-16	784947-103	. LIGHT INSTL, fwd navigation (LH) *(see fig. 31 for reqd)*	REF	
	784947-104	. LIGHT INSTL, fwd navigation (RH) *(see fig. 31 for reqd)*	REF	
	784948-1	. . LENS ASSY, (DS28) fwd navigation light (LH)	1	
	784948-3	. . LENS ASSY, (DS29) fwd navigation light (RH)	1	
-17	761468-3	. . . SPACER, fwd navigation light	6	
-18	784950-1	. . . RING, fwd navigation light inner	1	
-19	784951-1	. . . RING, fwd navigation light outer	1	
-20	619165-5	. . . LENS, navigation light red (A0307) (97925)	1	
	619165-6	. . . LENS, navigation light green (A0307) (97925)	1	
-21	784949-1	. . SUPPORT ASSY, fwd navigation light socket	1	6701-6815
	784949-101	. . SUPPORT ASSY, fwd navigation light socket	1	6816-
	784949-2	. . SUPPORT ASSY, fwd navigation light socket	1	6701-6815
	784949-102	. . SUPPORT ASSY, fwd navigation light socket	1	6816-
-22	MS35478-1680	. . LAMP, (DS28) (DS29) (96906)	1	
-23	A43950	. . LAMPHOLDER, (DS28) (DS29) bayonet type (A1587) (alternate to A7518)	1	
	A7518	. . LAMPHOLDER, (DS28) (DS29) bayonet type (72914) (Lockheed spec dwg 610097-3) (alternate to A43950)	REF	
		Attaching Parts		
	AN515-6R6	. . SCREW (88044)	2	
	761672-4	. HOUSING INSTL, aft navigation light LH *(see fig. 32 for reqd)*	REF	
	761672-5	. HOUSING INSTL, aft navigation light RH *(see fig. 32 for reqd)*	REF	
	761669-13	. . HOUSING ASSY, aft navigation light (LH)	2	
	761669-15	. . HOUSING ASSY, aft navigation light (RH)	2	
-24	11445	. . . LAMPHOLDER, (DS23) (DS24) flush tail light (72914) (Lockheed spec dwg 619164-3)	1	
-25	761669-7	. . . HOUSING, aft navigation light	1	
-26	CRF61-1077	. . BLANKET, aft navigation light (A0809) (K0510) (Lockheed spec dwg 637340-5) (alternate to 12H23512 LH)	2	
	12H23512LH	. . BLANKET, aft navigation light (78741) (Lockheed spec dwg 637340-5) (alternate to CRF61-1077)	REF	
-26A	CRF61-1224	. . BLANKET, aft navigation light (A0809) (K0510) (Lockheed spec dwg 637340-6) (alternate to 12H23512 RH)	2	
	12H23512RH	. . BLANKET, aft navigation light (78741) (Lockheed spec dwg 637340-6) (alternate to CRF61-1224)	REF	
		Attaching Parts		
-27	AN520C10R6	. . SCREW (7 upper, 8 lower) (88044)	15	

Fuselage Electrical and Electronics

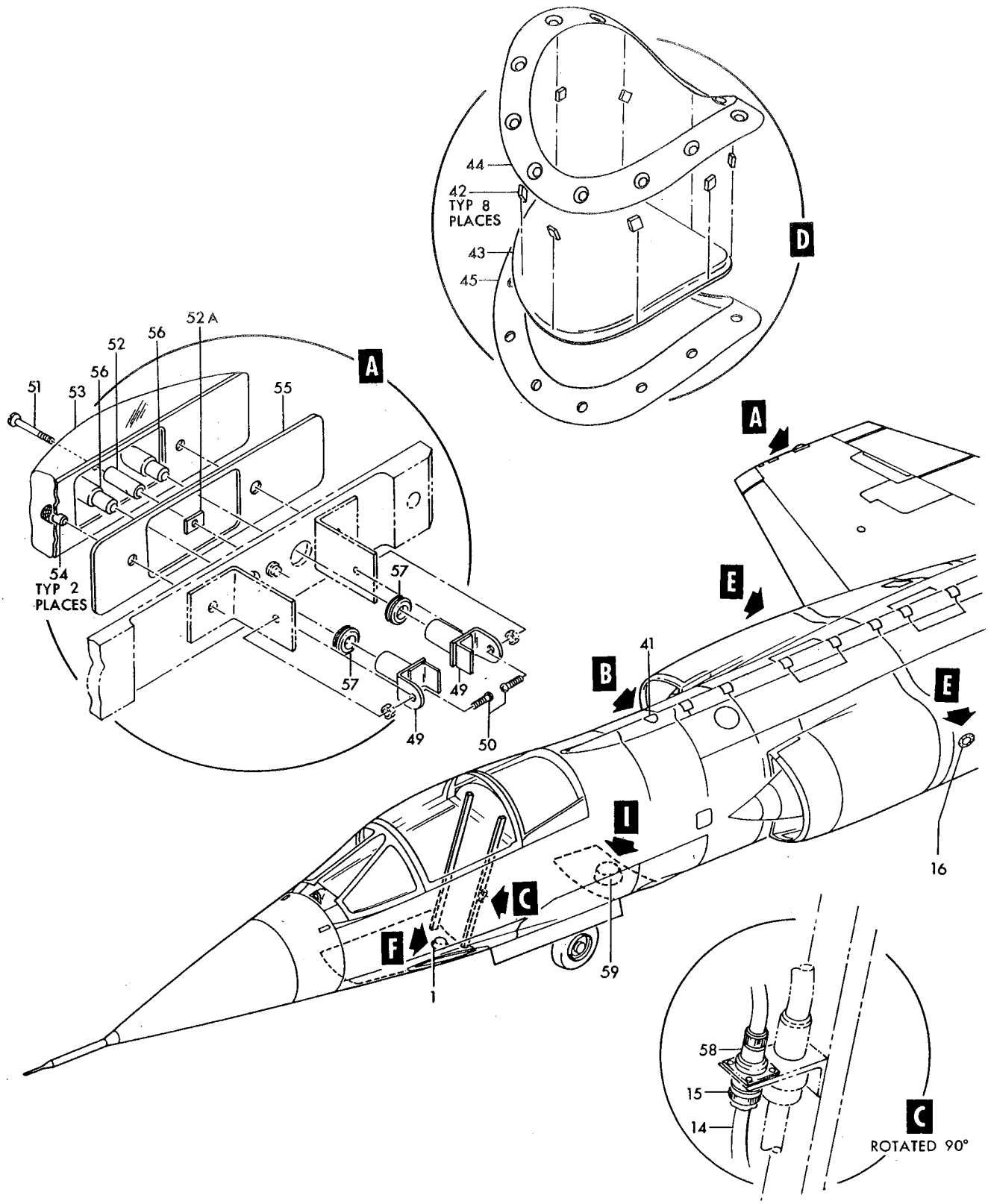

Figure 198— External Lights (Sheet 1 of 3)

Fuselage Electrical and Electronics

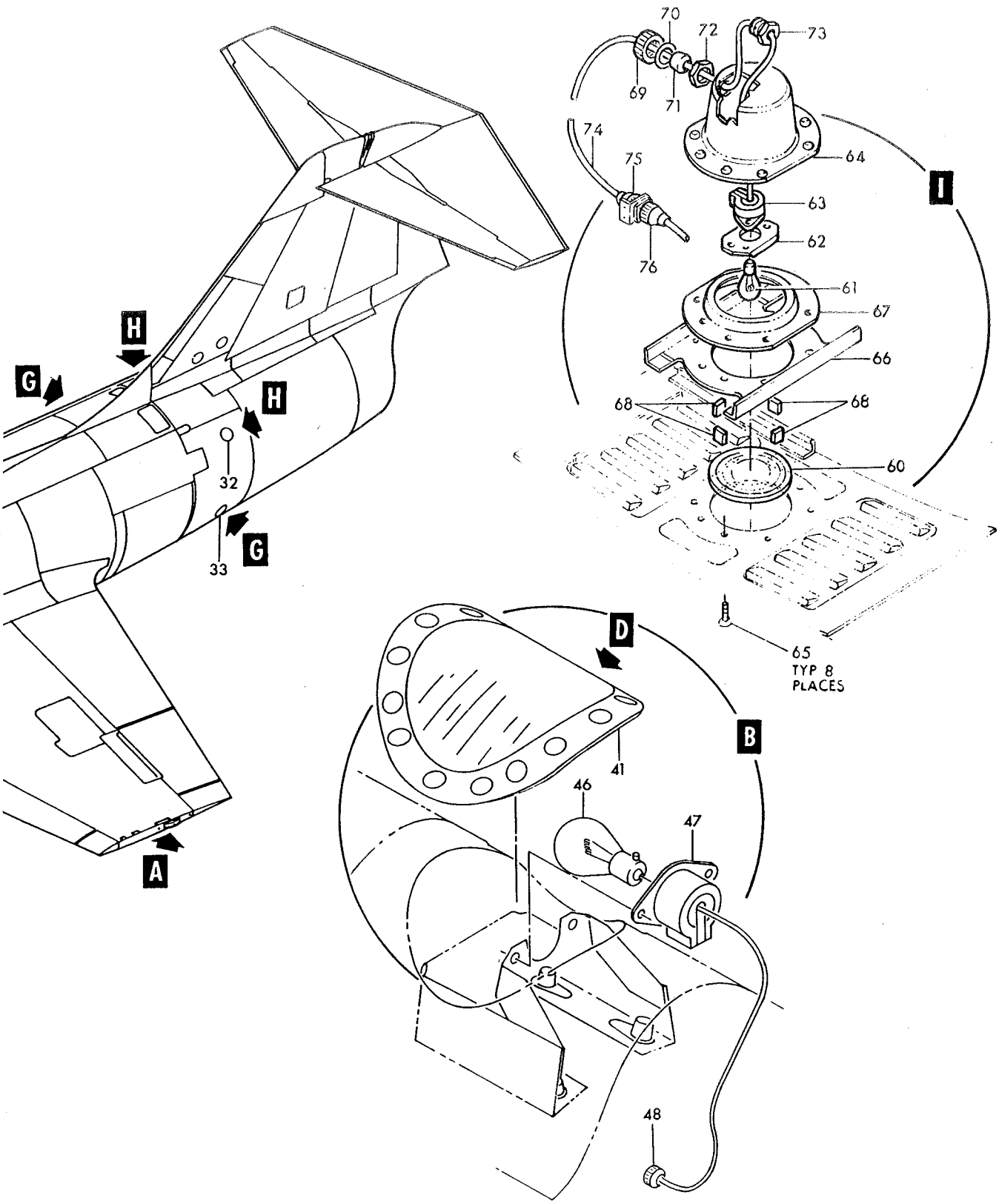

Figure 198— External Lights (Sheet 2 of 3)

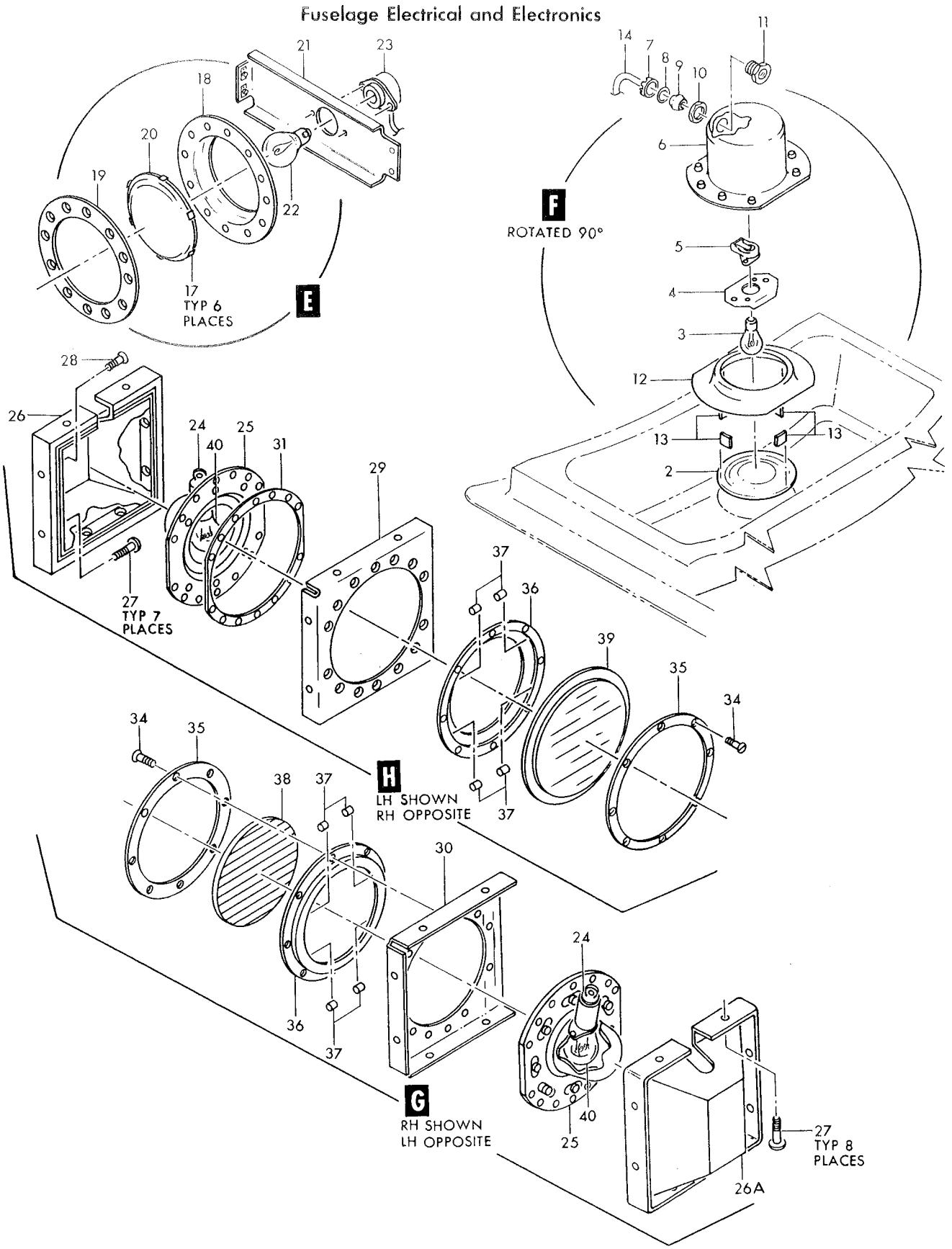

Figure 198— External Lights (Sheet 3 of 3)

Figura e particolare	NDR	DENOMINAZIONE 1 2 3 4 5 6 7	Quant.	Codice applicab.
198-28	AN520C10R8	SCREW (upper RH) (88044)	1	
	AN960C10L	WASHER (88044)	16	
	MS21042L3	NUT (96906)	16	
		*		
-29	774606-1	DOUBLER, LH (upper)	1	
	774606-2	DOUBLER, RH (upper)	1	
	774606-1	DOUBLER, LH (lower)	1	
-30	774607-2	DOUBLER, RH (lower)	1	
-31	761668	SPACER, aft navigation light (upper)	1	
	761672-101	LENS INSTL, aft navigation light *(see fig. 32 for reqd)*	REF	
-32	761666-5	LENS ASSY, aft navigation light (LH upper)	1	
	761666-7	LENS ASSY, aft navigation light (RH upper)	1	
-33	761666-4	LENS ASSY, aft navigation light (LH and RH lower)	2	
		Attaching Parts		
-34	SK70C1032 1-2	SCREW (76689) (whn exh use AN507C1032R8)	8	
	AN507C1032R8	SCREW (88044) (use SK70C1032 1-2 until exh)	REF	
		*		
-35	761664	RING, aft navigation light outer	1	
-36	761663	RING, aft navigation light inner	1	
-37	761468-6	SPACER, aft navigation light	4	
-38	619165-4	LENS, (DS24) navigation light white (LH and RH lower) (A0307) (97925)	1	
-39	619165-9	LENS, (DS23) navigation light yellow (LH upper) (A0307) (97925)	1	
	619165-11	LENS, (DS23) navigation light yellow (RH upper) (A0307) (97925)	1	
-40	MS35478-1129	LAMP, (DS23) (DS24) (96906)	4	
	797374-101	ANTENNA ASSY, top UHF *(see fig. 200 for reqd)*	REF	
-41	762811	LENS ASSY, top fus light	1	
		Attaching Parts		
	AN507-1032R8	SCREW (88044)	16	
		*		
-42	761468-3	SPACER, top fus light	8	
-43	762826	LENS, (DS26) top fus light white	1	
-44	762814	RING, top fus light outer	1	
-45	762813	RING, top ufs light inner	1	
-46	35478-1680	LAMP, (DS26) (96906)	1	
-47	A43950	LAMPHOLDER, (DS26) bayonet type (A1587) (alternate to A7518) *(see fig. 200 for reqd)*	REF	
	A7518	LAMPHOLDER, (DS26) bayonet type (72914) (Lockheed spec dwg 610097-3) (alternate to A43950) *(see fig. 200 for reqd)*	REF	
	785242-1	HARNESS ASSY, top fus light *(see fig. 200 for reqd)*	REF	
-48	MS3103-8S1P	CONNECTOR, (J208), recp (top fus light P-156 disc.) (71468) *(see fig. 200 for reqd)*	1	
	849917-103	HARNESS INSTL, wing tip light (LH) *(see fig. 3 for reqd)*	REF	
	849918-103	HARNESS INSTL, wing tip light (RH) *(see fig. 3 for reqd)*	REF	
	849528-101	HARNESS ASSY, LH wing tip light	1	
	849516-101	HARNESS ASSY, RH wing tip light	1	
-49	7-08K1	SOCKET, (DS35) (DS36) miniature bayonet lamp (95263) (Lockheed spec dwg 610066)	2	
		Attaching Parts		
-50	NAS602-6	SCREW (80205)	2	
	MS21042L08	NUT (96906)	2	
		*		
	851004-101	LIGHT INSTL, wing tip formation (LH) *(see fig. 17 for reqd)*	REF	
	851004-102	LIGHT INSTL, wing tip formation (RH) *(see fig. 17 for reqd)*	REF	
	780224-1	HOUSING ASSY, (DS35) wing tip formation light (LH)	1	
	780224-3	HOUSING ASSY, (DS36) wing tip formation light (RH)	1	
		Attaching Parts		
-51	NAS1203-15	SCREW (80205)	1	
-52	NAS43DD3-40	SPACER (80205)	1	
-52A	780223-101	SHIM, wing tip formation light (laminated aluminum)	1	
		*		
-53	780224-5	HOUSING, wing tip formation light	1	
	780224-7	HOUSING, wing tip formation light	1	

Figura e particolare	NDR	1 2 3 4 5 6 7 DENOMINAZIONE	Quant.	Codice applicab.
198-54	780226-1	. . . INSERT, wing tip formation light	2	
-55	780225-1	. . GASKET, wing tip formation light	1	
-56	MS25231-316	. . LAMP, (DS35) (DS36) (96906)	2	
-57	295957-10C	. . GROMMET, nylon (61864)	2	
	849730-101	. HARNESS ASSY, cockpit side lower instrument panel *(see fig. 159 for reqd)*	REF	6701-6740
	849875-101	. HARNESS ASSY, cockpit side lower instrument panel *(see fig. 159 for reqd)*	REF	6741-6815
	852276-101	. HARNESS ASSY, cockpit side lower instrument panel *(see fig. 159 for reqd)*	REF	6816-
-58	DM9713-3S004	. . CONNECTOR, (P53) plug (P-83 disc.) (17419)	1	6701-6815
-59	852196-101	A. LIGHT INSTL, fus sta 305 to 335 lower navigation *(see fig. 61 for reqd)*	REF	
-60	619165-7	A. . LENS, navigation light white (A0307) (97925)	1	
-61	MS35478-1680	A. . LAMP (96906)	1	
	762911-101	A. . SOCKET SUPPORT ASSY, fus sta 305 to 335 bottom light	1	
-62	762911-3	A. . . SOCKET SUPPORT, fus sta 305 to 335 bottom light	1	
-63	A43950	A. . . LAMPHOLDER, (DS26) bayonet type (A1587) (Alternate to A7518)	1	
	A7518	A. . . LAMPHOLDER, (DS26) bayonet type (72914) (Lockheed spec. dwg 610097-3) (Alternate to A43950)	REF	
		Attaching Parts		
	AN520-10R6	A. . SCREW (88044)	2	
	AN960-10L	A. . WASHER (88044)	2	
-64	852183-101	A. . HOUSING ASSY, fus sta 305 to 335 lower light	1	
		Attaching Parts		
-65	MS24693S273	A. . SCREW (96906)	8	
-66	852182-101	A. . SKIN, fus sta 305 to 335 lower light	1	
-67	852184-101	A. . RING, fus sta 305 to 335 lower light	1	
-68	761468-3	A. . SPACER, fus sta 305 to 335 lower light	4	
-69	AN3054-6	A. . NUT (88044)	1	
-70	AN3067W3	A. . WASHER (88044)	1	
-71	AN3067S2	A. . SEAL (88044)	1	
-72	AN3066-6	A. . NUT (88044)	1	
-73	AN3064-6	A. . BOX CONNECTOR (88044)	1	
-74	852311-101	A. . HARNESS ASSY, bottom fus light to quick disc.	1	
-75	14371-0002	A. . . CONNECTOR, (J17) recp (P-83 quick disc.) (08524)	1	
	852274-101	. HARNESS ASSY, P-66 disc. to splice *(see fig. 156 for reqd)*	REF	6816-
-76	DM9713-3S004	A. . CONNECTOR, (P53) plug (P-83 disc.) (17419)	1	6816-

A - Reqd per AA. 1F-104-OT-759B
B - Removed per AA. 1F-104-OT-759B

Figura e particolare	NDR	DENOMINAZIONE 1 2 3 4 5 6 7	Quant.	Codice applicab.
		LANDING AND TAXIING LIGHTS		
199	762117	LIGHT INSTL, taxi *(see fig. 232 for reqd)*	REF	
- 1	D7585	LIGHT ASSY, (DS19) taxiing (72914) (Lockheed spec dwg 619168) (complete with lamp) *(see fig. 187)*	1	
		Attaching Parts		
- 1A	MS90728-6	BOLT (96906)	2	
		Partial breakdown follows		
- 2	D7585-1	LIGHT ASSY, taxiing (less lamp) (72914)	1	
- 3	4570	LAMP, 28V 150W sealed beam (65083)	1	
- 4	762118	BRACKET, taxiing light *(see fig. 232 for reqd)*	REF	
	761738-3L	BRACKET INSTL, landing light *(see fig. 240 for reqd)*	REF	
	761738-3R	BRACKET INSTL, landing light *(see fig. 240 for reqd)*	REF	
- 5	772858-1	BRACKET, LH landing light upper support	1	
	772858-2	BRACKET, RH landing light upper support	1	
- 6	761673L	BRACKET, LH landing light lower support	1	
	761673R	BRACKET, RH landing light lower support	1	
	775640-7	LIGHT INSTL, LH landing *(see fig. 188 for redq)*	REF	
	775641-9	LIGHT INSTL, RH landing *(see fig. 188 for reqd)*	REF	
- 7	772657-7	LIGHT ASSY, LH landing	1	
	772951-9	LIGHT ASSY, RH landing	1	
		Attaching Parts		
- 8	NAS623-3-1	SCREW (80205)	6	
- 9	MS21042L3	NUT (96906)	6	
-10	761739L	RING, LH landing light clamp	1	
	761739R	RING, RH landing light clamp	1	
-11	NAS428-3-14	BOLT (80205)	4	
-12	NAS623-3-2	SCREW (80205)	3	
-13	AN960D10	WASHER (88044)	7	
-13A	AN960D10L	WASHER (88044) (use as necessary to maintain snug fit of lamp)	AR	
-13B	AN960-10L	WASHER (88044)	7	
-14	MS21042L3	NUT (96906)	3	
-15	727906-1	SPRING, LH and RH landing light	4	
-16	798047-1	SUPPORT ASSY, LH lower landing light	1	
	798049-1	SUPPORT ASSY, RH lower landing light	1	
-17	798046-101	SUPPORT ASSY, LH upper landing light	1	
	798048-101	SUPPORT ASSY, RH upper landing light	1	
-17A	179814	GASKET, equipment assy	1	
-18	4581	LAMP, (DS27) sealed beam (08805)	1	
-19	179814	GASKET, equipment assy	1	
	761740L	HOUSING ASSY, RH landing light	1	
	761740R	HOUSING ASSY, LH landing light	1	
-20	761741L	HOUSING, LH landing light	1	
	761741R	HOUSING, RH landing light	1	
-21	AN3064-6	CONNECTOR (88044)	1	
-22	AN3054-6	NUT (88044)	1	
-23	AN3066-6	NUT (88044)	1	
-24	AN3067S2	SEAL (88044)	1	
-25	AN3067W3	WASHER (88044)	1	
-26	761742	DISK, landing light insulator	1	
-27	761734	RING, insulator	1	

Fuselage Electrical and Electronics

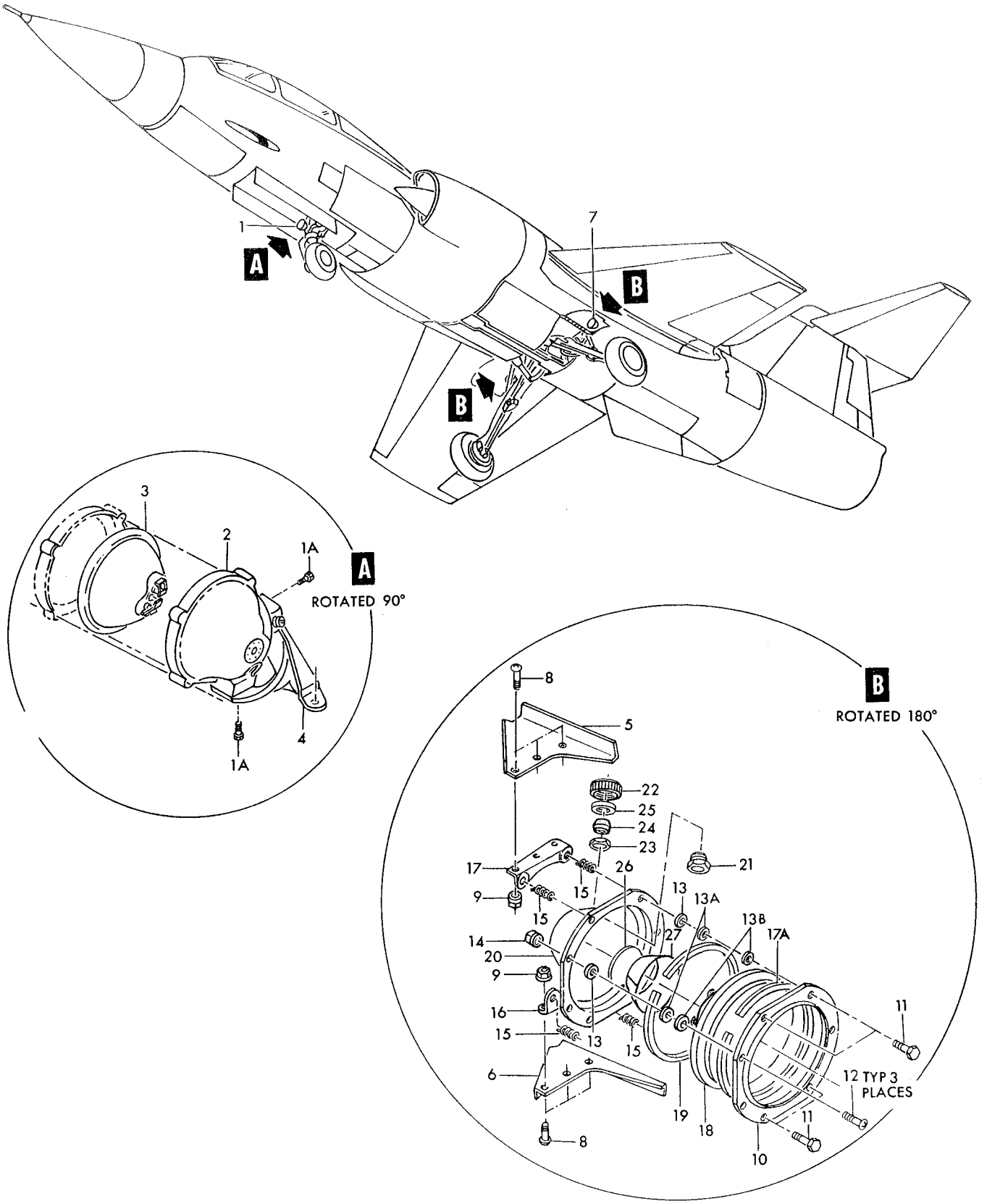

Figure 199— Landing and Taxiing Lights

Figura e particolare	NDR	1 2 3 4 5 6 7 DENOMINAZIONE	Quant.	Codice applicab.
		UHF AND IFF DORSAL FIN ANTENNAS		
200	784472-503	. ANTENNA ASSY, dorsal fin complete IFF *(see fig. 47 for reqd)*	REF	
-1	783152-1	. . ANTENNA ASSY, (E12) top located IFF	1	
	785219-101	. ANTENNA INSTL, top UHF *(see fig. 49 for reqd)*	REF	
-2	797374-101	. . ANTENNA ASSY, (E29) top UHF *(see fig. 198)*	1	
		Attaching Parts		
-3	NAS517-3-2	. . SCREW (80205)	2	
-4	NAS517-3-3	. . SCREW (80205)	36	
-5	NAS517-3-5	. . SCREW (80205)	4	
-6	NAS517-3-6	. . SCREW (80205)	10	
-7	NAS623-3-3	. . SCREW (80205)	3	
-8	NAS623-3-5	. . SCREW (80205)	3	
-9	AN960-10L	. . WASHER (88044)	6	
-10	MS21042L3	. . NUT (96906)	6	
-11	785220-1	. . . WINDOW, top UHF antenna	1	
-12	797372-1	. . . RADIATING ASSY, top UHF antenna	1	
	785242-1	. . . . HARNESS ASSY, top fus light *(see fig. 198)*	1	
-15	MS3103-8S1P	. . . . . CONNECTOR, (J208) recp (top fus light P-156 disc.) (96906) *(see fig. 198)*	1	
-16	797372-3	. . . . BUMPER, UHF antenna harness	2	
-17	MS35489-4	. . . . GROMMET (96906)	1	
-18	A43950	. . . . LAMPHOLDER, (DS26) bayonet type (A1587) (alternate to A7518) *(see fig. 198)*	1	
	A7518	. . . . LAMPHOLDER, (DS26) bayonet type (72914) (Lockheed spec dwg 610097-3) (alternate to A43950) *(see fig. 198)*	REF	
		Attaching Parts		
	AN515-8R8	. . . . SCREW (88044)	2	
	MS21042L08	. . . . NUT (96906)	2	
	797447-1	. HARNESS ASSY, bhd 310 to UHF top antenna *(see fig. 156 for reqd)* . .	REF	6701-6815
	852378-101	. HARNESS ASSY, bhd 310 to UHF top antenna *(see fig. 156 for reqd)* . .	REF	6816-
-19	UG1185U	. . CONNECTOR, (P17) plug (UHF top antenna) (80058)	1	
	Z158	A. . GRIP (04073)	1	
		Attaching Parts		
	AN515-4R8	. . SCREW (88044)	4	
	MS21042L04	. . NUT (96906)	4	
	852014-101	. HARNESS ASSY, IFF antenna electronic compt. antenna switching unit *(see fig. 156 for reqd)*	REF	
-20	45-011	. . CONNECTOR, (P13) (top tacan antenna) (04073)	1	
	Z158	. . GRIP (04073)	1	

A - Reqd per AA.1F-104-OT-797

Antennas

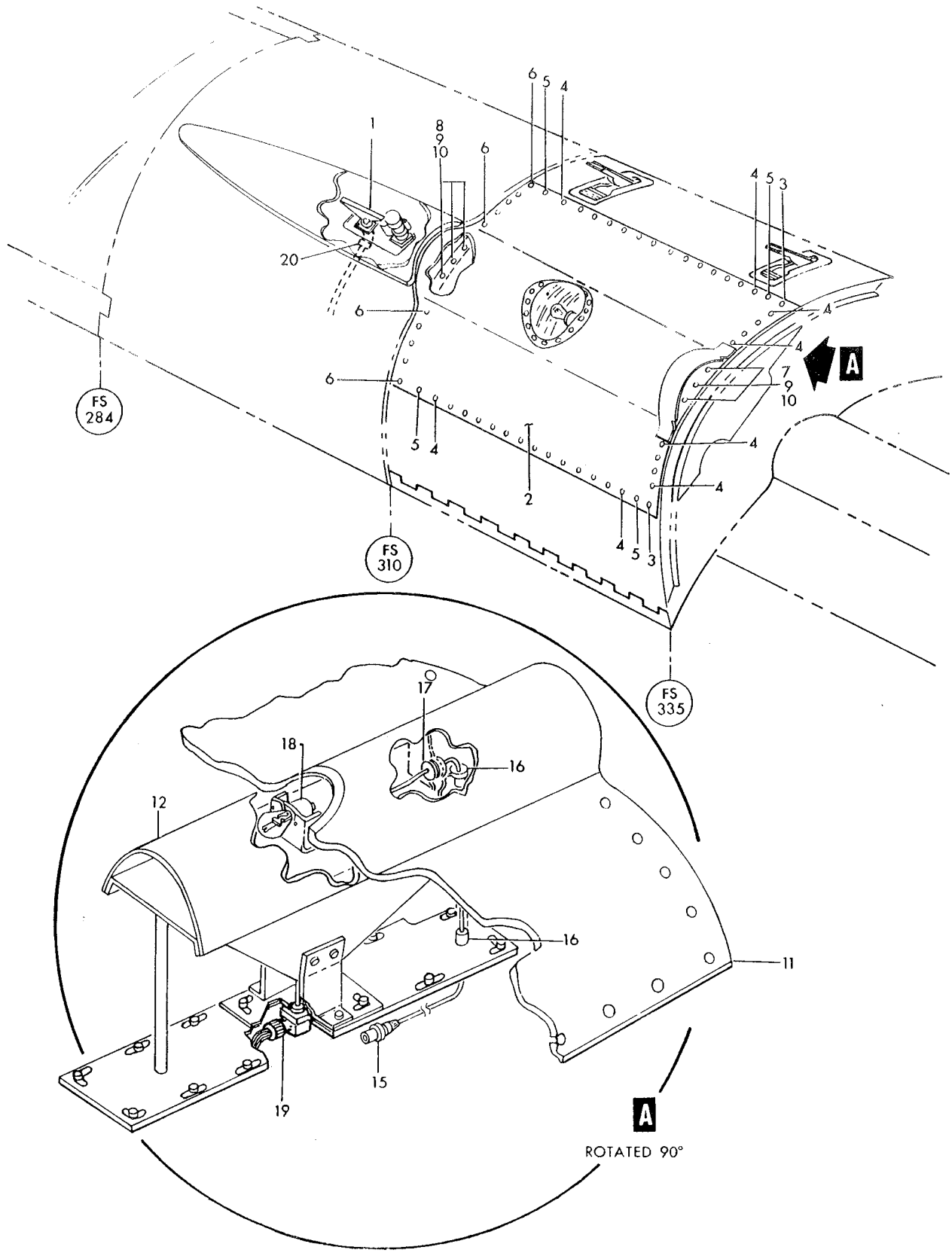

Figure 200—UHF and IFF Dorsal Fin Antennas

Figura e particolare	NDR	1 2 3 4 5 6 7 DENOMINAZIONE	Quant.	Codice applicab.
		TACAN, UHF, RCVR-XMTR AND VENTRAL FIN ANTENNAS		
201	786248-103	. ANTENNA INSTL, UHF *(see fig. 62 for reqd)*	REF	6701-6815
	786248-109	. ANTENNA INSTL, UHF *(see fig. 62 for reqd)*	REF	6816-
- 1	751205-3	. . ANTENNA ASSY, (E9) UHF	1	
		Attaching Parts		
- 2	NAS1203-6	. . SCREW (80205)	76	
		✲		
	847954-101	. . HARNESS ASSY, UHF antenna to escape hatch disc.	1	6701-6815
	852359-101	. . HARNESS ASSY, UHF antenna to escape hatch disc.	1	6816-
- 3	45-011	. . . CONNECTOR, (P13) plug (UHF antenna) (04073)	1	
- 4	UG1185AU	. . . CONNECTOR, (P17) plug (hatch disc.) (80058)	1	
	Z158	. . . GRIP (04073)	2	6816-
- 5	MS21919DG7	. . CLAMP (96906)	2	
		Attaching Parts		
- 6	AN520-10R12	. . SCREW (88044)	1	
- 7	AN520-10R20	. . SCREW (88044)	1	
- 8	LS607-20	. . SPACER, phenolic (36659)	1	
		✲		
	847955-101	. HARNESS ASSY, UHF RF line switch to hatch quick disc. *(see fig. 178 for reqd)*	REF	6701-6815
	852358-101	. HARNESS ASSY, UHF RF line switch to hatch quick disc. *(see fig. 178 for reqd)*	REF	6816-
- 9	UG1187AU	. . CONNECTOR, (J219) recp (hatch jach) (80058)	1	
	Z158	. . GRIP (04073)	1	6816-
	769833-501	. FIN ASSY, aft ventral *(see fig. 57 for reqd)*	REF	
-10	768178-501	. . ANTENNA ASSY, (E28) data link	1	
		Attaching Parts		
-11	NAS623-3-3	. . SCREW (80205)	2	
-12	NAS517-3-2	. . SCREW (80205)	14	
-13	AN960D10	. . WASHER (88044)	16	
-14	MS21042L3	. . NUT (96906)	14	
		✲		
-15	789506-1	. . ANTENNA ASSY, IFF/Tacan ventral fin	1	
		Attaching Parts		
-16	NAS517-3-2	. . SCREW (80205)	6	
-17	NAS623-3-3	. . SCREW (80205)	1	
-18	NAS221-6	. . SCREW (80205)	1	
-19	AN960D10	. . WASHER (88044)	3	
-20	MS21042L3	. . NUT (96906)	2	
		✲		
-21	768880-503	. . . PLATE ASSY, (E27) Tacan antenna grd (match comp do not stk sep)	1	
-22	768879-501	. . . SUPPORT ASSY, (E27) Tacan antenna radiating plate (match comp do not stk sep)	1	
-23	AN509-8R7	. . SCREW (88044)	6	
	AN960D8	. . WASHER (88044)	6	
	MS21042L08	. . NUT (96906)	6	
	791672-1	. HARNESS ASSY, bhd 505 to IFF/Tacan antenna *(see fig. 194 for reqd)*	REF	6701-6815
	852385-101	. HARNESS ASSY, bhd 505 to IFF/Tacan antenna *(see fig. 194 for reqd)*	REF	6816-
-24	UG573AU	. . CONNECTOR, (P114) plug (IFF/Tacan antenna) (80058)	1	
	Z158	. . GRIP (04073)	1	6816-
	785493-1	. HARNESS ASSY, bhd 505 to data link antenna *(see fig. 192 for reqd)*	REF	6701-6815
	852382-101	. HARNESS ASSY, bhd 505 to data link antenna *(see fig. 192 for reqd)*	REF	6816-
-25	UG573AU	. . CONNECTOR, (P114) plug (data link antenna) (80058)	1	
	Z158	. . GRIP (04073)	1	6816-
	852194-101	A. ELECTRICAL INSTL, antenna RCVR-XMTR radar altimeter *(see fig. 62 for reqd)*	REF	
-26	01R5-1001-1	A. . ANTENNA ASSY, (E2001) radar altimeter (A0019) *(see fig. 62 reqd)*	REF	
-27	HG7105A6	A. . RCVR-XMTR, (RETR2000) radar altimeter (A0019) (94580)	1	
		Attaching Parts		
	MS51959-45	A. . SCREW (96906)	24	
	AN960D8	A. . WASHER (88044)	24	
	MS21042L08	A. . NUT (96906)	24	
		✲		

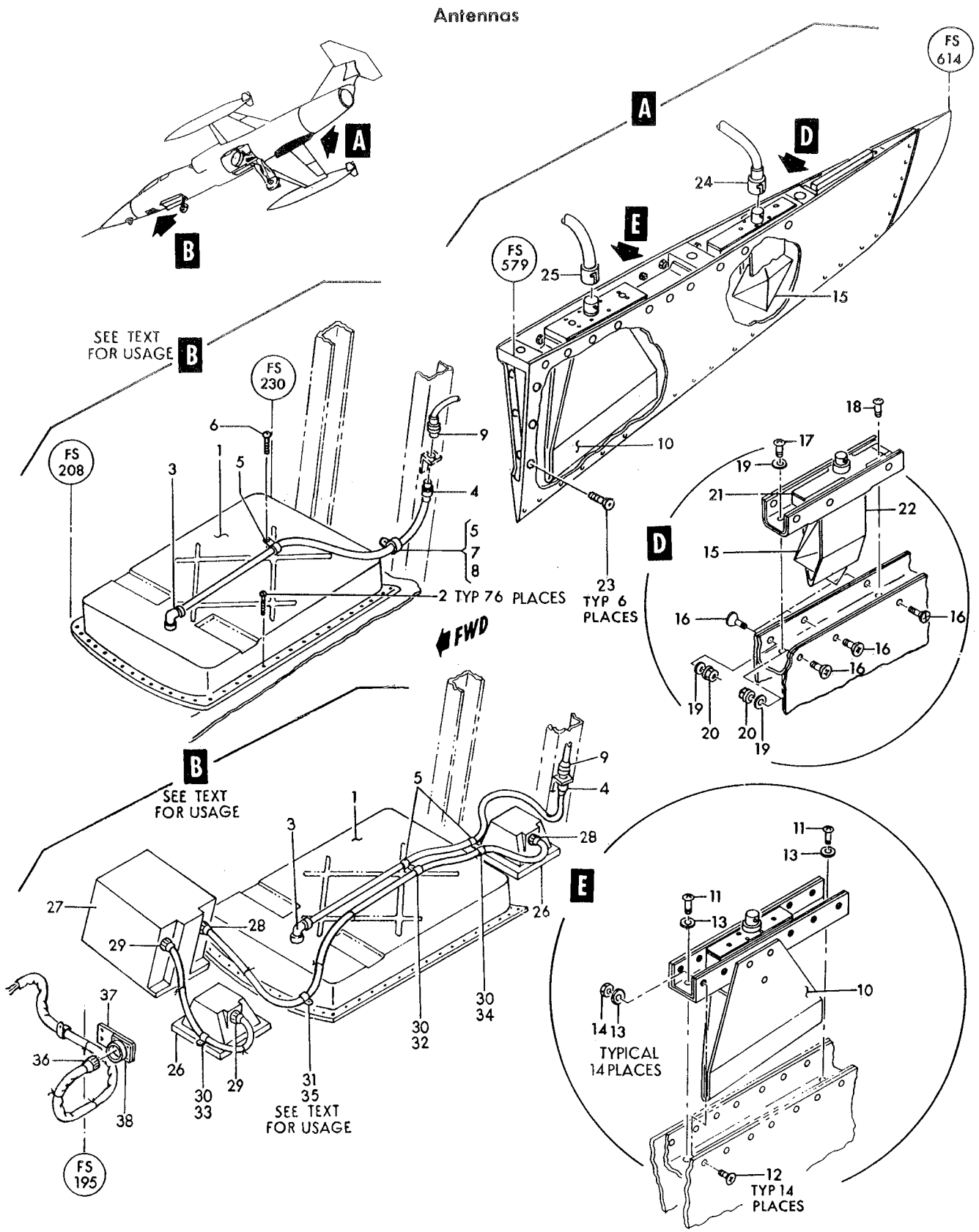

Figure 201— TACAN, UHF, RCVR-XMTR and Ventral Fin Antennas

Figura e particolare	NDR	1	2	3	4	5	6	7	DENOMINAZIONE	Quant.	Codice applicab.
201	852205-101	A.							HARNESS ASSY, radar altimeter XMTR Antenna to RCVR-XMTR	1	
-28	5-10-3	A.							CONNECTOR, (P2000) plug (XMTR antenna and radar altimeter RCVR-XMTR) (05209)	2	
	852206-101	A.							HARNESS ASSY, radar altimeter RCVR antenna to RCVR-XMTR)	1	
-29	5-10-3	A.							CONNECTOR, (P2000) plug (RCVR antenna and radar altimeter RCVR-XMTR) (05209)	2	
-30	MS21919DG7	A.							CLAMP (96906)	3	
-31	MS21919DG7								CLAMP (96906)	1	6816-
									Attaching Parts		
-32	AN520-10R14	A.							SCREW (88044)	1	
-33	AN520-10R20	A.							SCREW (88044)	1	
-34	AN520-10R22	A.							SCREW (88044)	1	
-35	AN520-10R22								SCREW (88044)	1	6816-
									*		
	852281-101	A.							HARNESS ASSY, radar altimeter RCVR-XMTR to bhd 255 *(see fig. 160 for reqd)*	REF	6816-
-36	MS3116P16-26S	A.							CONNECTOR, (P2) plug (RCVR-XMTR radar altimeter) (96906)	1	6816-
	849900-101								ELECTRICAL INSTL, fwd fus (NHA 849141-101) *(see fig. 156 for reqd)*	REF	
	852423-101								BRACKET ASSY, dummy recp of	1	6816-
									Attaching Parts		
	NAS623-2-2								SCREW (80205)	2	6816-
	AN960D8								WASHER (88044)	2	6816-
	MS21042L08								NUT (96906)	2	6816-
									*		
-37	852423-103								BRACKET, dummy recp of	1	6816-
-38	MS3115-16A								RECEPTACLE, dummy	1	6816-
									Attaching Parts		
	MS35206-215								SCREW (96906)	4	6816-
	MS21042L04								NUT (96906)	4	6816-
									*		

A - Reqd per AA. 1F-104-OT-759B

Figura e particolare	NDR	DENOMINAZIONE (1 2 3 4 5 6 7)	Quant.	Codice applicab.
		WINDSHIELD		
202	772082-105	. WINDSHIELD INSTALLATION (NHA 849141-101)	1	6701-6763
	772082-133	. WINDSHIELD INSTALLATION (NHA 849141-101)	1	6764-6792
	772082-137	. WINDSHIELD INSTALLATION (NHA 849141-101)	1	6793-
- 1	772082-107	A. . WINDSHIELD ASSY	1	6701-6763
	772082-135	B. . WINDSHIELD ASSY	1	6764-6792
	772082-139	B. . WINDSHIELD ASSY	1	6793-
		Attaching Parts		
- 2	AN4-7A	. . BOLT (88044)	5	
- 3	NAS1104-10	. . BOLT (80205)	12	
- 4	AN4-10A	. . BOLT (88044)	2	
- 5	6800-048	. . RETAINER, bolt (80539)	12	
	AN960D416	. . WASHER (88044)	19	
	MS21042L4	. . NUT (96906)	19	
- 6	771488-503	. . . FRAME ASSY, lower windshield	1	
- 7	LS3859R8-19	. . . . BUSHING, ream type (36659)	1	
	784043-1	. . . FAIRING ASSY, infrared window	1	
		Attaching Parts		
- 8	NAS517-3-2	. . . SCREW (80205)	19	
- 9	NAS517-3-3	. . . SCREW (80205)	6	
-10	784042-1	. . . . SKIN, infrared window	1	
-11	761250	. . . . WINDOW, gun sight	1	
-12	784044-1	. . . . RETAINER, infrared window	1	
	773470-23	A. . . PANEL (HR9) ASSY, side windshield LH	1	6701-6763
	851615-101	B. . . PANEL (HR9) ASSY, side windshield LH	1	
-13	773470-21	A. . . . PANEL, side windshield LH	1	6701-6763
	851615-105	B. . . . PANEL, side windshield LH	1	
-14	760669R	A. . . PANEL, side windshield RH	1	6701-6763
	851614-101	B. . . PANEL, side windshield RH	1	
-15	760207-8L	. . . RETAINER, windshield side panel LH	1	
-16	760207-8R	. . . RETAINER, windshield side panel RH	1	
		Attaching Parts		
-17	NAS517-3-2	. . . SCREW (80205)	6	
-18	NAS517-3-4	. . . SCREW (80205)	3	
-19	NAS517-3-3	. . . SCREW (80205)	15	
-20	NAS517-3-10	. . . SCREW (80205)	1	
-21	NAS517-3-14	. . . SCREW (80205)	2	
-22	NAS517-3-20	. . . SCREW (80205)	2	
-23	NAS517-3-12	. . . SCREW (LH only) (80205)	4	
-24	NAS517-3-5	. . . SCREW (80205) (13 reqd on LH and 17 reqd on RH)	AR	
-25	AN960D10	. . . WASHER (88044) (10 reqd on LH and 6 reqd on RH)	AR	
-26	AN960D10	. . . WASHER (88044) (RH only)	8	
-27	MS21042L3	. . . NUT (23 reqd on LH and 19 reqd on RH) (96906)	AR	
-28	MS21042L3	. . . NUT (96906)	2	
-29	MS21042L3	. . . NUT (96906)	2	
-30	52-1650-02	. . . NUT, flush (72962) (13 reqd on LH and 17 reqd on RH)	AR	
-31	847349-101	. . . BRACKET, clock support RH *(see fig. 220)*	1	
-32	784120-1	. . . BRACKET, windshield LH	1	
-33	761252	. . . BRACKET, attachment windshield RH	1	
-34	760207-19	. . . RETAINER, seal LH	1	
-35	760207-20	. . . SUPPORT, seal LH	1	
-36	760207-17	. . . RETAINER, seal RH	1	
-37	760944	. . . RING, windshield aft	1	
-38	760207-11	. . . RETAINER, aft	1	
-39	761468-3	. . . SPACER, windshield panel	AR	
-40	761468-4	. . . SPACER, windshield panel	AR	
-41	761468-5	. . . SPACER, windshield panel	AR	

Windshield and Canopy

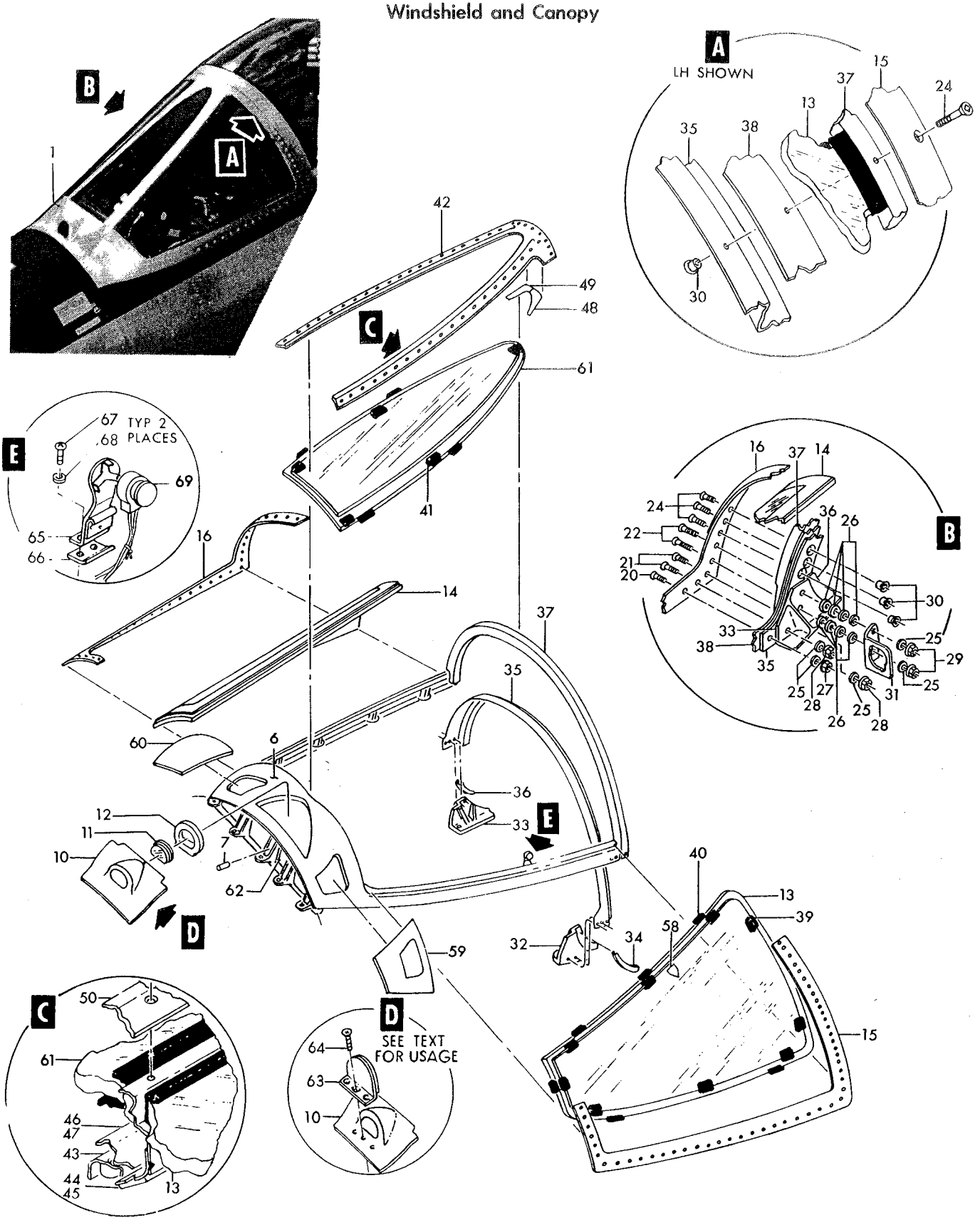

Figure 202— Windshield (Sheet 1 of 2)

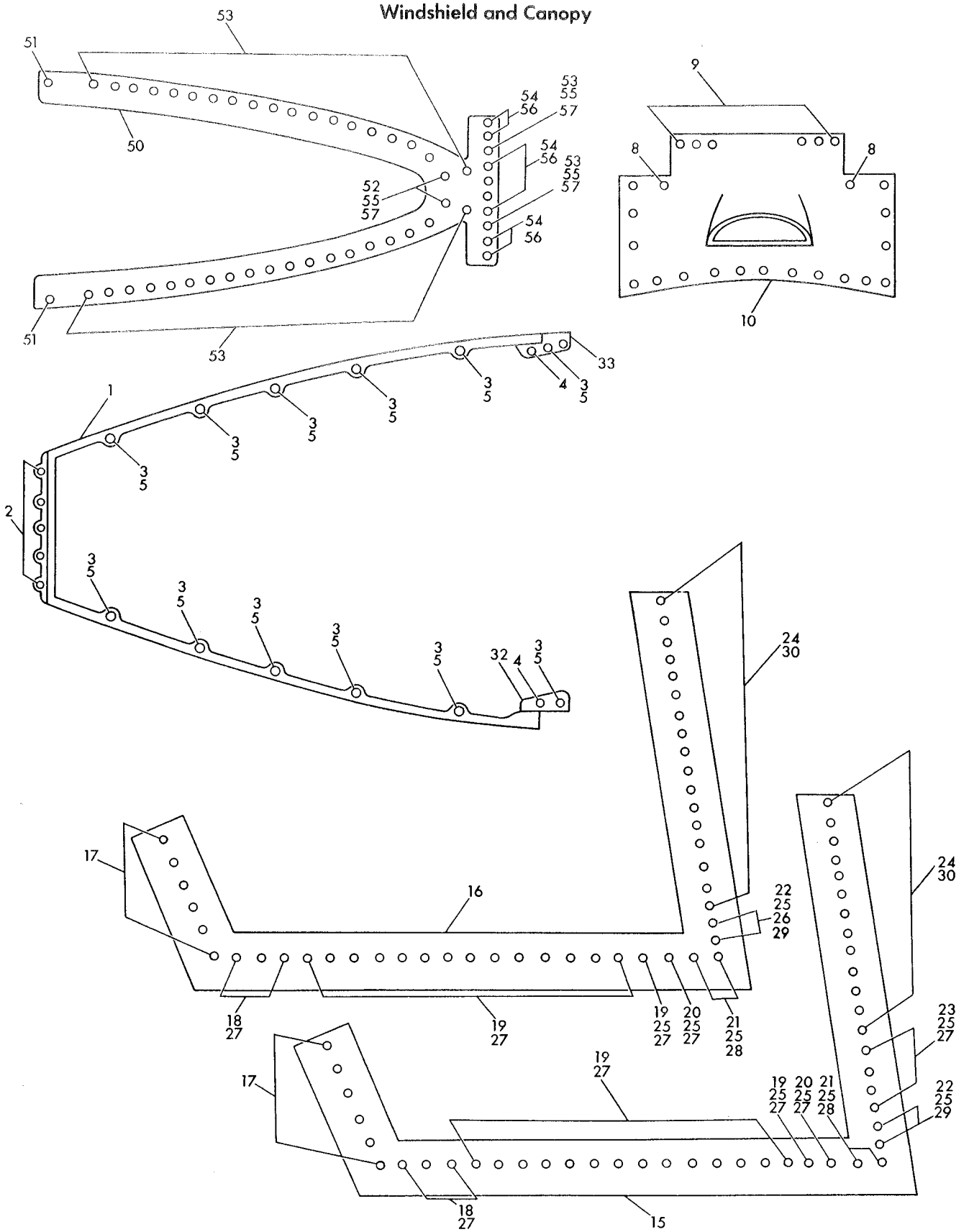

Figure 202— Windshield (Sheet 2 of 2)

Figura e particolare	NDR	1 2 3 4 5 6 7	DENOMINAZIONE	Quant.	Codice applicab.
202-42	772082-5		FRAME ASSY, windshield center	1	
-43	NAS689P12-19		CHANNEL NUT (80205)	2	
-44	773139-1		BEAM, center frame LH	1	
-45	773139-2		BEAM, center frame RH	1	
-46	772082-7		RETAINER, center frame LH	1	
-47	772082-8		RETAINER, center frame RH	1	
-48	761443L		FILLER, windshield	1	
-49	761443R		FILLER, windshield	1	
-50	760207-7		RETAINER, windshield center	1	
			Attaching Parts		
-51	NAS517-3-3		SCREW (82005)	2	
-52	NAS517-3-11		SCREW (80205)	2	
-53	NAS517-3-12		SCREW (80205)	40	
-54	NAS517-3-5		SCREW (80205)	8	
-55	AN960D10		WASHER (88044)	4	
-56	52-1650-02		NUT, flush (72962)	8	
-57	MS21042L3		NUT (96906)	4	
			*		
	773161-1		BRACKET, radar lock on indicator light *(see fig. 227)*	1	
-58	773161-2		BRACKET, radar lock on indicator light *(see fig. 227)*	1	
-59	763930		RAIN REMOVER ASSY, fus sta 184 to 189 LH side *(see fig. 149)*	1	
			Attaching Parts		
	NAS517-3-2		SCREW (80205)	10	
	AN960D10		WASHER (88044)	10	
	MS21042L3		NUT (96906)	10	
			*		
-60	760207-9R		SKIN, windshield (fus sta 184 to 189 RH side)	1	
			Attaching Parts		
	NAS517-3-2		SCREW (80205)	26	
	AN960D10		WASHER (88044)	26	
	MS21042L3		NUT (96906)	26	
			*		
-61	760668	A.	PANEL, windshield center	1	6701-6792
	851613-101	B.	PANEL, windshield center	1	
	784131-1		GUSSET, windshield LH	1	
	784132-1		BLOCK, windshield LH	1	
-62	764579		NAMEPLATE, aircraft modification	1	
	784265-9		PLUMBING INSTL, windshield frame *(see fig. 134)*	1	
	790986-1		BRACKET ASSY, dust cover support *(see fig. 219)*	2	
	779208-503		ELECTRICAL INSTL, radar lock on indicator light *(see fig. 227)*	1	6701-6763
	779208-107		ELECTRICAL INSTL, radar lock on indicator light *(see fig. 227)*	1	6764-
	779208-504		ELECTRICAL INSTL, radar lock on indicator light *(see fig. 227)*	1	6701-6763
	779208-108		ELECTRICAL INSTL, radar lock on indicator light *(see fig. 227)*	1	6764-
	B6630C10		LIGHT FIXTURE, (DS76) instrument (72914) (Lockheed spec dwg 629267-3) *(see fig. 220)*	1	
			Attaching Parts		
	AN507B632R12		SCREW (88044) *(see fig. 220)*	1	6701-6815
	MS24693BB30		SCREW (96906) *(see fig. 220)*	1	6816-
	LS9030-327		LAMP, incandescent (blue-white) (36659)	1	
	784706-3		DUCT INSTL, windshield defogging *(see fig. 141)*	1	
	FL0693-101	C.	GUARD INSTL, I.R.S. window (A0019) *(see fig. 260 for reqd)*	REF	
-63	FL0692-101	C.	GUARD, I.R.S. window (A0019)	1	
-64	NAS517-3-3	C.	SCREW (80205)	3	
	FL1011-000		BRACKET INSTL, LH cockpit thermal switch *(see fig. 159 for reqd)*	REF	
-65	FL1010-000		BRACKET ASSY, LH cockpit thermal switch	1	
-66	FL1009-000		PLATE, LH cockpit thermal switch	1	
-67	AN515-6R4		SCREW (88044)	2	
-68	AN960-6		WASHER (88044)	2	
-69	G32-IL		THERMOSTAT, (S67) windshield thermal switch (97896) (Lockheed spec dwg 613662-1) *(see fig. 159 for reqd)*	REF	

A - Removed per AA.1F-104S-OT-113B
B - Reqd per AA.1F-104S-OT-113B
C - Reqd per AA.1F-104-OT-715A

Figura e particolare	NDR	DENOMINAZIONE	Quant.	Codice applicab.
		CANOPY		
203	783941-1	CANOPY INSTL (NHA 849141-101)	1	
- 1	760346	PIN, canopy hinge	1	
		Attaching Parts		
	NAS623-3-2	SCREW (80205)	1	
	AN960D10	WASHER (88044)	1	
	MS21042L3	NUT (96906)	1	
		*		
	FL0242-103	CANOPY ASSY, complete (A0019) *(see fig. 141 and 209)*	1	
	FL0242-118	FRAME INSTL, canopy forward reinforcement (A0019)	1	
- 2	FL0242-110	ANVIL ASSY, canopy thruster forward *(see fig. 210)* (A0019)	1	
	FL0242-111	ANVIL ASSY, canopy thruster forward *(see fig. 210)* (A0019)	1	
		Attaching Parts		
- 3	NAS560HK4-17	SCREW (80205)	1	
- 5	AS1242-9E	SCREW (U1604) *(see fig. 212 for reqd)*	REF	
- 6	LS6061-416L	WASHER, plain (36659)	AR	
- 7	SP13E	WASHER (K0195) *(see fig. 212 for reqd)*	REF	
- 8	785754-1	SHIM, canopy thruster anvil	AR	
- 9	NAS679C4W	NUT (80205)	1	
-10	AGS2001E1	NUT (U1604) *(see fig. 212 for reqd)*	REF	
		*		
-11	780568-1	DUCT ASSY, canopy defogging *(see fig. 141)*	1	
-11A	787769-1	BRACKET, rear view mirror	1	
	787769-2	BRACKET, rear view mirror	1	
		Attaching Parts	2	
-11B	NAS560HK3-27	SCREW (80205) (used with four or less washers)	AR	
	NAS560HK3-29	SCREW (80205) (used with five to eight washers)	AR	
-12	LS881-2	WASHER, plain aluminum (36659) (two or less used under nut, eight or less used under screw head)	AR	
-12A	NAS679C3W	NUT (80205)	2	
		*		
	780780-501	GUIDE ROLLER ASSY, canopy forward edge	1	
		Attaching Parts		
	NAS517-3-11	SCREW (80205)	3	
	MS21042L3	NUT (96906)	3	
		*		
-13	NAS1222-3D	INSERT (80205)	1	
-13A	CR8-1CP	BEARING, cam follower needle (60380)	1	
-13B	780780-3	WELD ASSY	1	
	780668-101	BRACKET ASSY, down warning switch	1	
		Attaching Parts		
-14	NAS623-3-5	SCREW (80205)	2	
-15	AN960-10	WASHER (88044)	2	
-16	780670-1	SHIM, bracket assy	AR	
		*		
-17	AN345-10	NUT (88044)	2	
-18	LS881-2	WASHER, plain aluminum (36659)	2	
-19	NAS428-3-10	BOLT (80205)	1	
-20	780668-3	BRACKET, down warning switch	1	
-21	783941-5	CANOPY ASSY	1	
-22	760342	HINGE, upper canopy	1	
-23	764921	NAMEPLATE, modification and identification	1	
-24	760345	RAIL, canopy LH side	1	
-25	760887	RAIL, canopy RH side	1	
-26	784984-1	PANEL ASSY, transparent canopy	1	
	761489-4	BRACKET INSTL, canopy latch	1	
-27	42K3-048	NUT (72962)	3	
-28	AN960D416	WASHER (88044)	3	
-29	726291-3	SHIM, canopy latch stud	AR	
-30	762367	STUD, canopy latch index	3	
-31	762362	BRACKET, canopy latch pin	3	

Windshield and Canopy

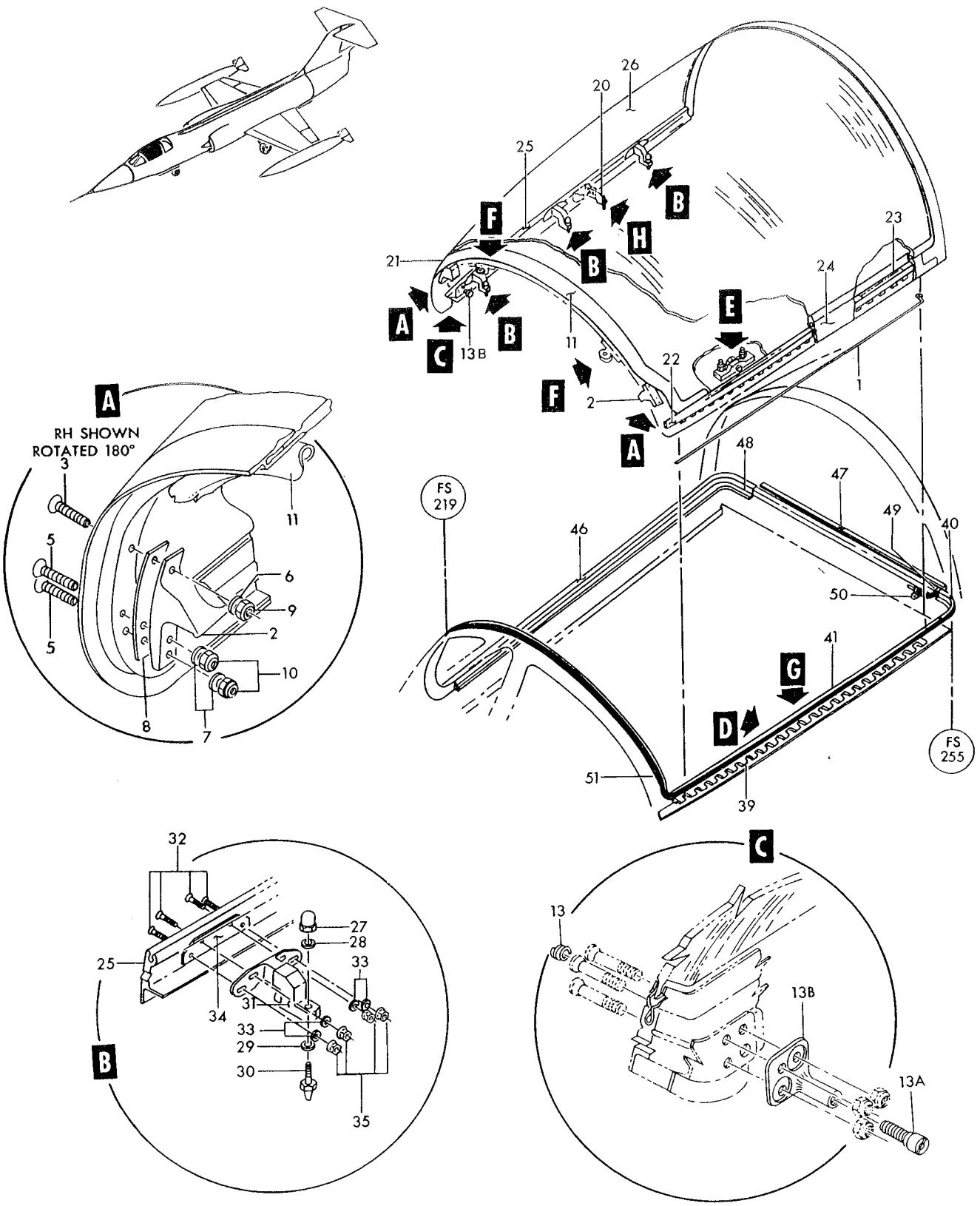

Figure 203— Canopy (Sheet 1 of 2)

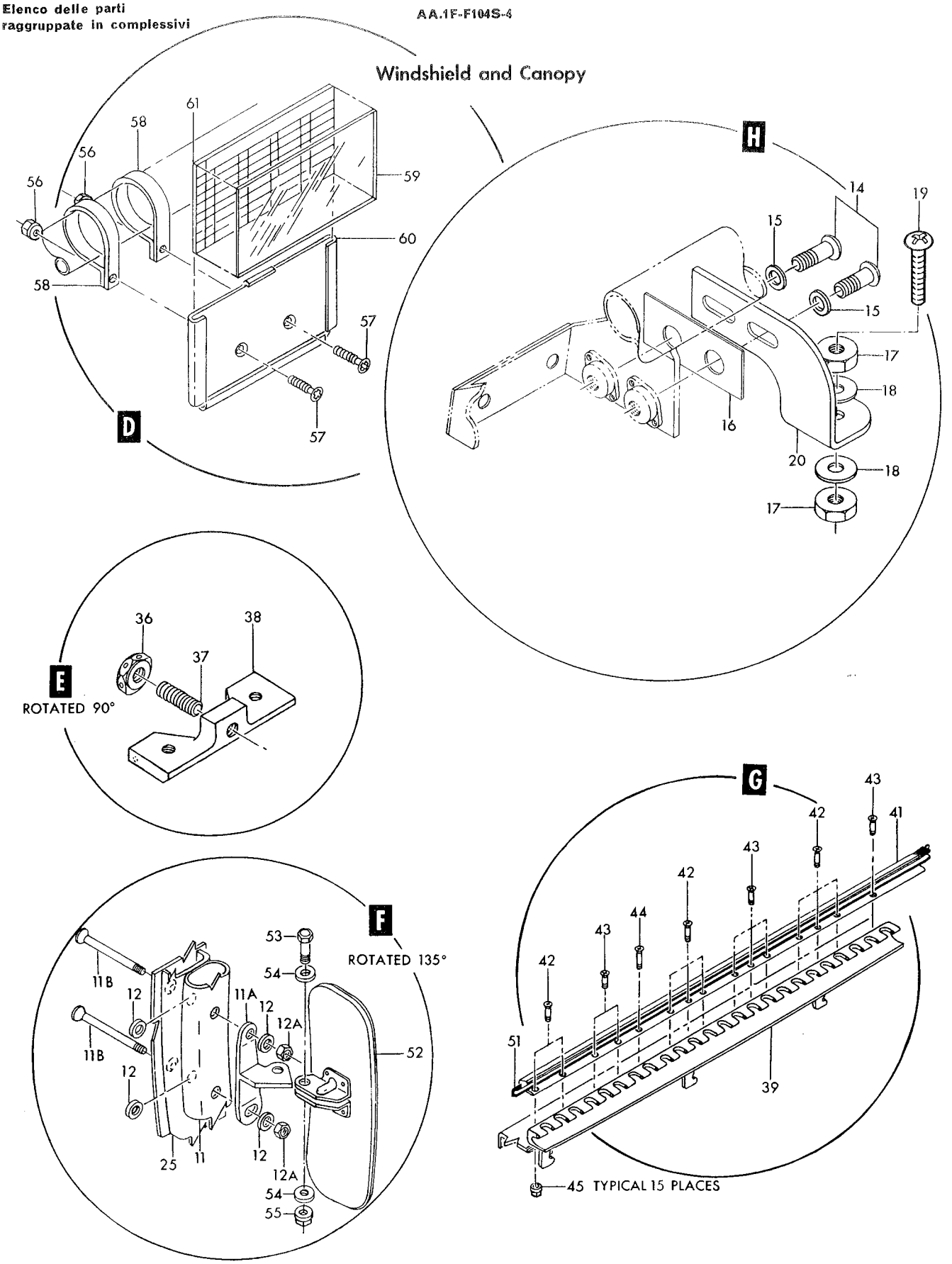

Figure 203— Canopy (Sheet 2 of 2)

Figura e particolare	NDR	1 2 3 4 5 6 7 DENOMINAZIONE	Quant.	Codice applicab.
		Attaching Parts		
203-32	NAS1203-8	SCREW (80205)	4	
-33	AN960-10	WASHER (88044)	4	
-34	762671	SHIM, canopy latch pin bracket	AR	
-35	MS21042L3	NUT (96906)	4	
		*		
-36	NAS509-4	NUT (80205)	1	
-37	AN565A428H12	SCREW (88044)	1	
-38	780559-1	BRACKET, canopy hinge stop	1	
		Attaching Parts		
	NAS517-3-12	SCREW (80205)	2	
	AN960D10	WASHER (88044)	2	
	MS21042L3	NUT (96906)	2	
		*		
-39	780503-1	HINGE, lower releasable LH *(see fig. 207 for reqd)*	REF	
	784238-3	SEAL RETAINER INSTL, canopy LH *(see fig. 30 for reqd)*	REF	
-40	760347	RETAINER, canopy seal LH aft	1	
-41	784238-7	RETAINER, seal LH	1	
		Attaching Parts		
-42	NAS1203-8	SCREW (80205)	8	
-43	NAS1203-4	SCREW (80205)	6	
-44	NAS1203-12	SCREW (80205)	1	
-45	MS21042L3	NUT (96906)	15	
		*		
	784238-1	SEAL RETAINER INSTL, canopy RH *(see fig. 37 for reqd)*	REF	
-46	760348-8	RETAINER, canopy seal RH	1	
	784238-13	SEAL RETAINER INSTL, aft *(see fig. 48 for reqd)*	REF	
-47	784238-9	RETAINER, canopy seal aft	1	
	784238-101	SEAL INSTL, canopy (NHA 849141-101)	REF	
-48	851556-101	RETAINER, seal RH aft	1	
-49	761730	CLIP, canopy seal retainer	1	
-50	NO NUMBER	CLAMP, hose 3/16-3 (77860)	1	
		Attaching Parts		
	AN515-8R14	SCREW (88044)	1	
	NAS43DD3-16	SPACER (80205)	1	
	MS21042L08	A. NUT (96906)	1	6701-6720
		*		
-51	751102-1	SEAL ASSY, canopy inflatable	1	
	787870-1	MIRROR INSTL, cockpit (NHA 849071-101)	1	
	787870-2	MIRROR INSTL, cockpit (NHA 849071-101)	1	
-52	061-1	MIRROR ASSY, rear view (97925) (Lockheed spec dwg 649061-1)	1	
		Attaching Parts		
-53	NAS1103-4	BOLT (80205)	1	
-54	AN960-10L	WASHER (88044)	2	
-55	MS21042L3	NUT (96906)	1	
		*		
	851003-101	HOLDER INSTL, channel card (NHA 849141-101)	1	
-56	MS21043-08	NUT (96906)	2	
-57	NAS514P832-6	SCREW (80205)	2	
-58	AN742D16	CLAMP (88044)	2	
-59	787566-1	SHIELD, card holder	1	
-60	787568-1	HOLDER, channel card	1	
-61	792323-1	CARD, UHF channels	1	

A - Removed per AA.1F-104S-OT-109

Figura e particolare	NDR	DENOMINAZIONE	Quant.	Codice applicab.
		CANOPY LATCH MECHANISM		
204	783028-101	LATCH MECHANISM INSTL, canopy *(see fig. 30 for reqd)*	REF	
- 1	762352	LATCH ASSY, canopy forward *(see fig. 205)*	1	6701-6866
	762352-101	LATCH ASSY, canopy *(see fig. 205)*	1	6867-
- 2	762376	LATCH ASSY, canopy center *(see fig. 205)*	1	6701-6866
	762376-101	LATCH ASSY, canopy *(see fig. 205)*	1	6867-
- 3	762377	LATCH ASSY, canopy aft *(see fig. 205)*	1	6701-6866
	762377-101	LATCH ASSY, canopy *(see fig. 205)*	1	6867-
		Attaching Parts		
- 4	NAS1203-6	SCREW (80205)	4	
- 4A	NAS623-3-10	SCREW (reqd on 762352 latch assy) (80205)	1	
- 5	MS21042L3	NUT (96906)	4	
- 6	762361	SHIM	1	
		*		
- 7	769015-1	HANDLE ASSY, external canopy latch *(see fig. 206)*	1	
- 8	781031-1	HANDLE ASSY, internal canopy latch *(see fig. 206)*	1	
- 9	AN24-12	BOLT (88044)	1	
- 9A	AN24-17	BOLT (88044)	2	
-10	NAS1204-8D	BOLT (80205)	1	
-11	AN320-4	NUT (88044)	4	
-12	AN960D416	WASHER (88044)	3	
	MS24665-134	COTTER PIN (96906)	3	
-13	851523-101	ROD ASSY, canopy latch mechanism	1	
-14	726328-3	. CLEVIS, canopy latch rod	1	
-15	726328-4	. CLEVIS, canopy latch rod	1	
-16	851522-101	. ROD ASSY, canopy latch	1	
-17	AN316-5R	. NUT (88044)	2	
-18	781141-101	ROD ASSY, canopy latch mechanism	1	
-19	726328-3	. CLEVIS, canopy latch rod	1	
-20	781140-1	. CLEVIS, canopy latch rod	1	
-21	851522-101	. ROD ASSY, canopy latch	1	
-22	AN316-5R	. NUT (88044)	2	
-23	726198-3	CLEVIS, canopy latch male	1	
-24	762778	END, canopy latch	1	
-25	726199-3	CLEVIS, canopy latch female	1	
-26	MS20392-2C9	PIN (96906)	1	
-27	AN960-10L	WASHER (88044)	1	
	MS24665-134	COTTER PIN (96906)	2	
-28	762779	SLEEVE, canopy latch	1	
-29	MS20392-2C27	PIN (96906)	1	
-30	NAS43-3-11	SPACER (80205)	2	
-31	AN960-10L	WASHER (88044)	1	
	MS24665-134	COTTER PIN (96906)	1	
-32	762780	SPRING, canopy latch	1	
	782272-501	BRACKET ASSY, canopy down warning switch handle contact	1	
-33	784561-1	. BRACKET ASSY, canopy down warning switch handle contact	1	
	784891-1	. . BRACKET ASSY, canopy down warning switch handle contact	1	
-34	MS25026-1	. SWITCH, (S6) (96906)	1	
-35	AN3166-1	. ACTUATOR (88044)	1	
-36	781590-1	. PLATE ASSY, cover support	1	
-37	MS35489-33	. GROMMET (96906)	1	
-38	780662-1	GUIDE, upward ejection canopy	1	
		Attaching Parts		
-39	NAS623-3-9	SCREW (80205)	1	
-40	NAS623-3-10	SCREW (80205)	1	
-41	LS881-4	WASHER (under head) (36659)	1	
-42	AN960D10	WASHER (under head) (88044)	1	
-43	MS21042L3	NUT (96906)	2	
		*		
-44	780674-1	FITTING, canopy thruster fwd RH	1	
		Attaching Parts		
-45	NAS623-3-8	SCREW (80205)	1	
-46	NAS623-3-9	SCREW (80205)	1	

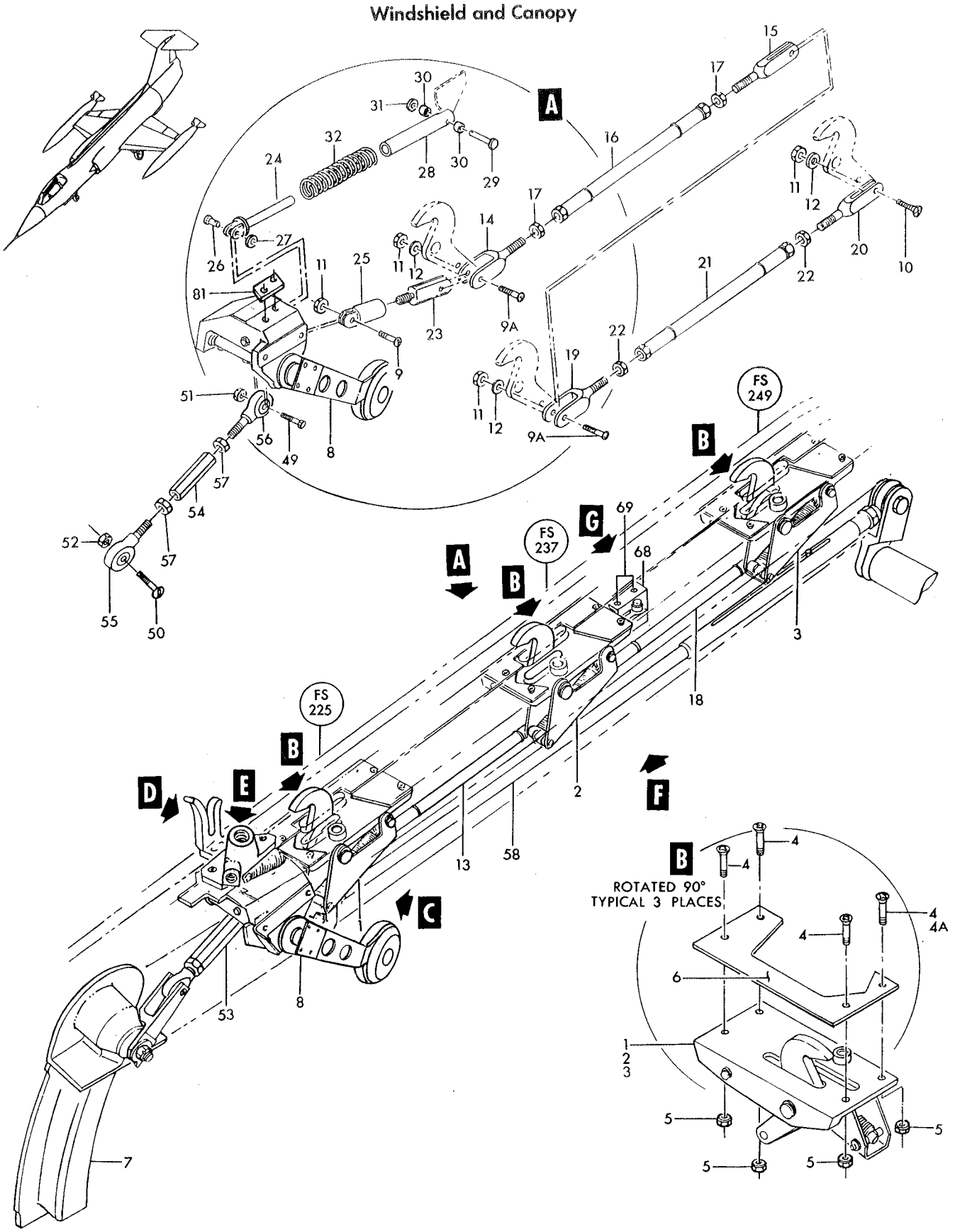

Figure 204— Canopy Latch Mechanism (Sheet 1 of 2)

Windshield and Canopy

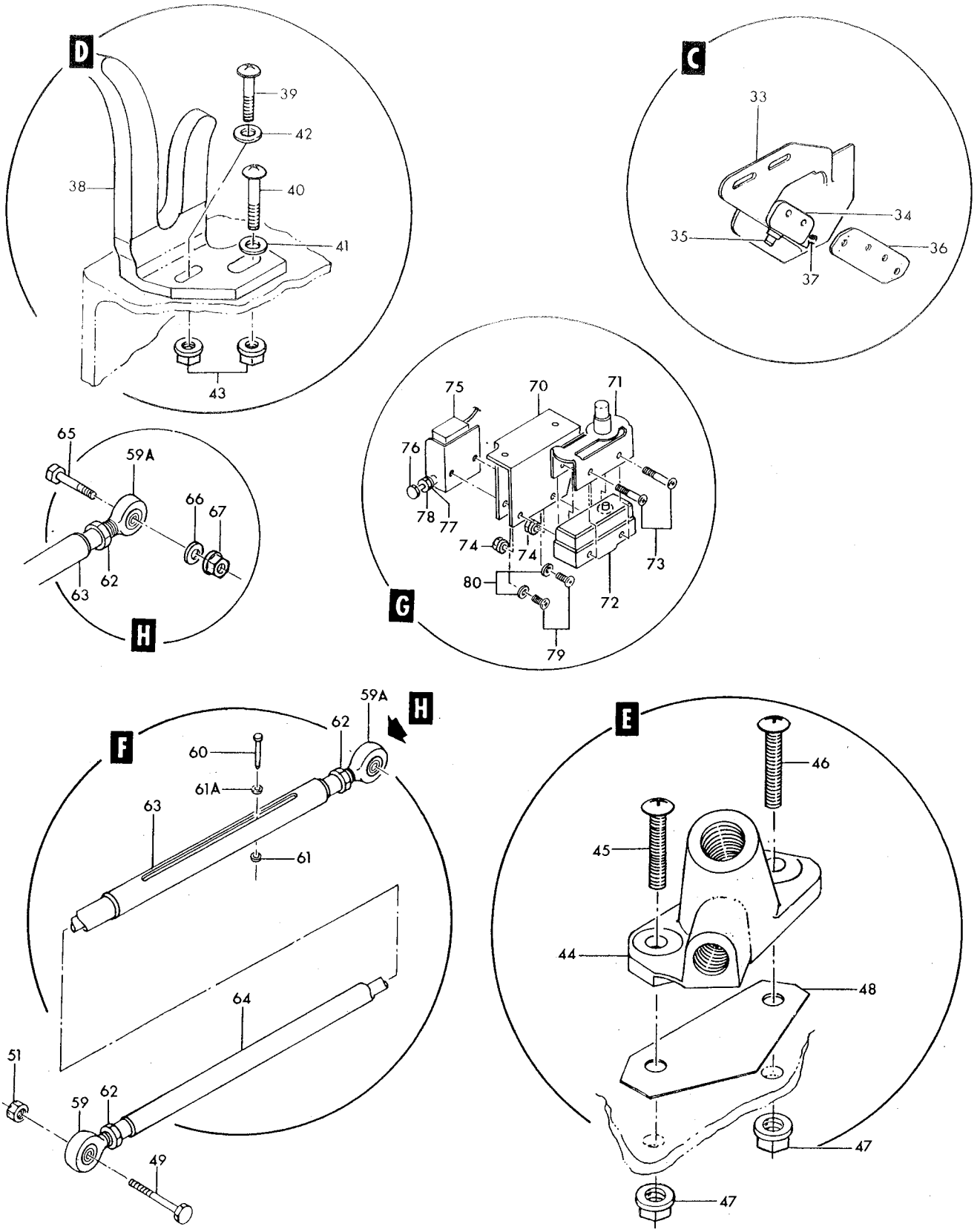

Figure 204— Canopy Latch Mechanism (Sheet 2 of 2)

Figura e particolare	NDR	DENOMINAZIONE	Quant.	Codice applicab.
204-47	MS21042L3	NUT (96906)	2	
-48	781032-1	SHIM, canopy thruster	AR	
-49	AN174-17	BOLT (88044)	1	
-50	AN23-17	BOLT (88044)	1	
-51	AN310-4	NUT (88044)	1	
-52	AN320-3	NUT (88044)	1	
	MS24665-134	COTTER PIN (96906)	2	
-53	781061-1	ROD ASSY, canopy latch mechanism	1	
-54	762366	. ROD, handle interconnect	1	
-55	MR3	. BEARING, rod end (77896)	1	
-56	MR4	. BEARING, rod end (77896)	1	
-57	AN316-6R	. NUT (88044)	2	
-58	780665-1	TUBE ASSY, canopy latch release RH	1	
-59	MR4	. BEARING, rod end (77896)	1	
-59A	BRE4095L	. ROD END, self-aligning type (81376)	1	
	MS24665-151	. COTTER PIN (96906)	1	
-60	MS20392-3C33	. PIN (96906)	1	
-61	AN960-416L	. WASHER (88044)	1	
-61A	AN960-416	. WASHER (88044)	1	
-62	AN316-6R	. NUT (88044)	2	
-63	780659-1	. SLEEVE, canopy latch release	1	
-64	780660-1	. ROD ASSY, canopy latch release	1	
-65	NAS1104-13	BOLT (80205)	1	
-66	AN960-416L	WASHER (88044)	1	
-67	MS21042L4	NUT (96906)	1	
-68	781070-1	SWITCH ASSY, canopy seal inflating and down warning	1	
		Attaching Parts		
-69	NAS1203-4	SCREW (80205)	2	
-70	780669-1	. BRACKET ASSY, sill canopy down warning switch	1	
-71	AN3166-1	. ACTUATOR, limit switch (88044)	1	
-72	MS25026-1	. SWITCH, (S6) (96906)	1	
-73	AN515-6R18	. SCREW (88044)	2	
-74	MS21042L06	. NUT (96906)	2	
-75	MS16106-1	. SWITCH, (S43) (96906)	1	
-76	762964	. SCREW, canopy latch limit switch adjusting actuator	1	
-77	AN935-6	. WASHER (88044)	1	
-78	AN340-6	. NUT (88044)	1	
-79	AN500A6-4	. SCREW (88044)	2	
-80	AN960D6	. WASHER (88044)	2	
-81	781038-1	SHIM, canopy latch bracket	AR	

Figura e particolare	NDR	1 2 3 4 5 6 7 DENOMINAZIONE	Quant.	Codice applicab.
		CANOPY LATCH ASSEMBLIES		
205- 1	762352	. LATCH ASSY, canopy forward *(see fig. 204 for reqd)*	REF	6701-6866
	762352-101	. LATCH ASSY, canopy forward *(see fig. 204 for reqd)*	REF	6867-
- 2	762376	. LATCH ASSY, canopy center *(see fig. 204 for reqd)*	REF	6701-6866
	762376-101	. LATCH ASSY, canopy center *(see fig. 204 for reqd)*	REF	6867-
- 3	762377	. LATCH ASSY, canopy aft *(see fig. 204 for reqd)*	REF	6701-6866
	762377-101	. LATCH ASSY, canopy aft *(see fig. 204 for reqd)*	REF	6867-
- 4	MS16624-1031	. . RING (96906)	2	
- 5	726203-3	. . PIN, canopy latch	1	
- 6	MS16624-1050	. . RING (96906)	2	
- 7	726203-4	. . PIN, canopy latch	1	
- 8	762354	. . LIFT, canopy latch (reqd on 762352 and 762377)	1	
- 9	726292-3	. . SPACER, canopy latch lifter (reqd on 762352 and 762377)	AR	
-10	NAS43DD8-16	. . SPACER (80205) (reqd on 762376)	1	
-11	MS24665-132	. . COTTER PIN (96906)	2	
-12	NAS70A209-438	. . WASHER (80205)	2	
-13	MS20392-2C11	. . PIN (96906)	2	
-14	765283-1	. . HOOK, canopy latch	1	
-15	762358	. . LINK, canopy latch	1	
-16	MS24665-130	. . COTTER PIN (96906)	1	
-17	AN960D6	. . WASHER (88044)	2	
-18	MS20392-1C9	. . PIN (96906)	1	
-19	762357	. . LEVER, canopy latch	1	6701-6866
	762357-101	. . LEVER, canopy latch	1	6867-
-20	762360	. . END, canopy latch bungee	1	
-21	726197-3	. . SPRING, canopy latch bungee	1	
-22	AN960-616L	. . WASHER (88044)	1	
-23	MS24665-132	. . COTTER PIN (96906)	1	
-24	NAS70A209-438	. . WASHER (80205)	1	
-25	MS20392-2C37	. . PIN (96906)	1	
-26	NAS42DD6-18	. . SPACER (80205)	2	
-27	762359	. . SLEEVE, canopy latch bungee	1	
-28	762356	. . BRACKET, canopy latch bungee	1	
-29	762781	. . LUG, canopy latch over center bungee (reqd on 762352)	1	
	762355	. . SUPPORT ASSY, canopy latch	1	
-30	NAS561P2-4	. . . ROLLPIN (80205)	1	
-31	726202-3	. . . BUSHING, canopy support	1	
-32	762355-3	. . . SUPPORT, canopy latch	1	

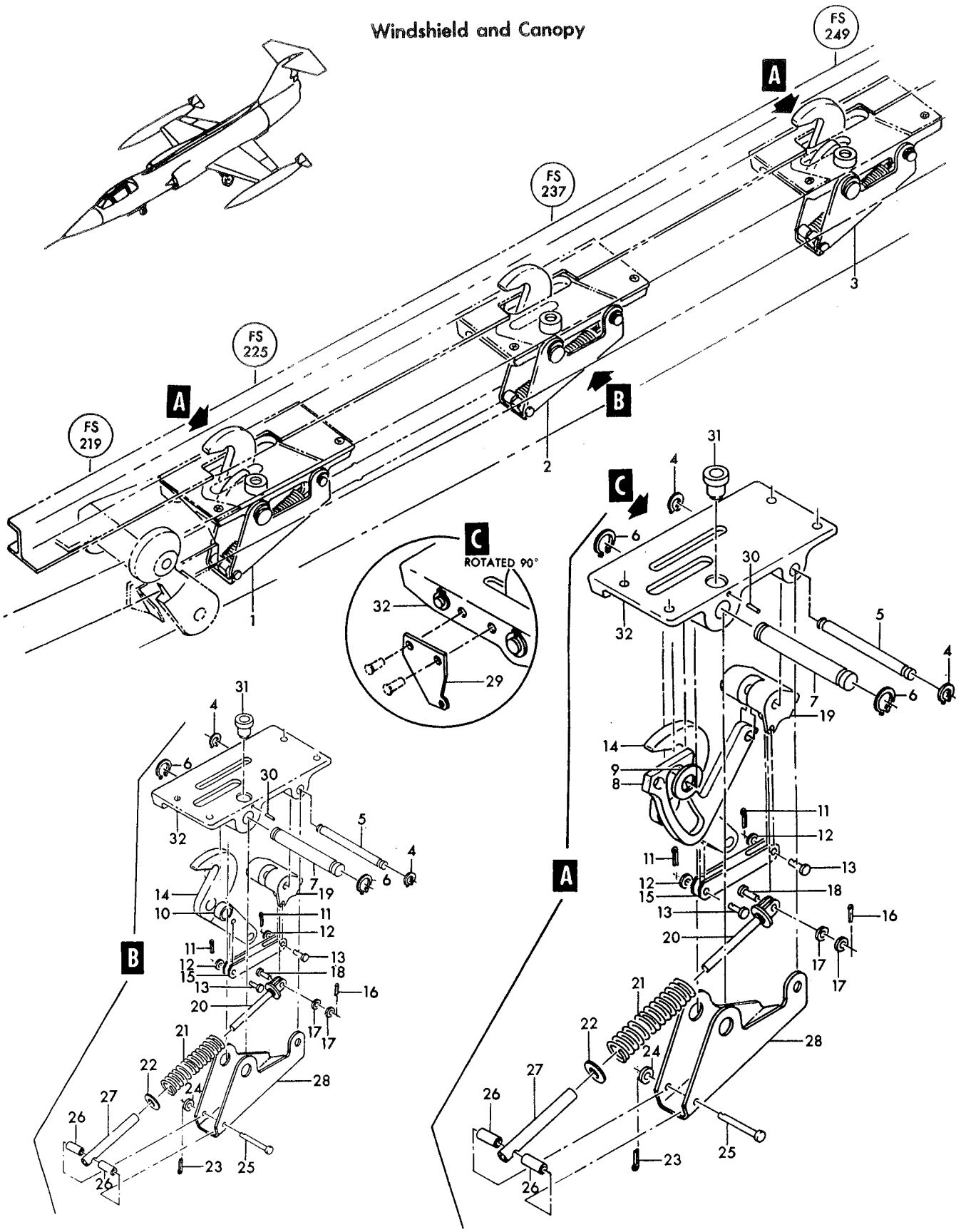

Figure 205— Canopy Latch Assemblies

Figura e particolare	NDR	DENOMINAZIONE (1 2 3 4 5 6 7)	Quant.	Codice applicab.
		CANOPY RELEASE HANDLES		
206- 1	769015-1	. HANDLE ASSY, external canopy latch *(see fig. 204 for reqd)*	REF	
- 2	AN320-7	. . NUT (88044)	1	
- 3	AN960-716L	. . WASHER (88044)	1	
- 4	762818	. . RETAINER, external canopy latch handle	1	
- 5	MS16624-1031	. . RING (96906)	2	
- 6	762944	. . PIN, external canopy latch handle	1	
- 7	726200-5	. . SPRING, external canopy latch handle	1	
- 8	762372	. . SHAFT, external canopy latch handle	1	
- 9	726292-4	. . SPACER, canopy latch lifter	AR	
	762385	. . LEVER ASSY, extension handle actuating canopy latch	1	
-10	NAS561P2-4	. . . PIN (80205)	1	
-11	762385-3	. . . LEVER, extension handle actuating canopy latch	1	
-12	762370	. . GRIP ASSY, external canopy latch	1	
-13	762903	. . . GRIP, external canopy latch	1	
-14	762507	. . . GUIDE, external canopy latch	1	
-15	762370-3	. . . ARM, external canopy latch grip	1	
-16	762373	. . SHAFT, external canopy latch handle actuating	1	
-17	AN960-4	. . WASHER (88044)	1	
-18	MS20392-1C45	. . PIN (96906)	1	
-19	762817	. . SPRING, external handle detent	1	
-20	762371	. . DETENT, external canopy latch	1	
	769014-1	. . HOUSING ASSY, external canopy latch	1	
-21	726201-3	. . . BUSHING, external canopy latch handle	2	
-22	769014-3	. . . HOUSING, external canopy latch	1	
	781031-1	. HANDLE ASSY, internal canopy latch *(see fig. 204 for reqd)*	REF	
		Attaching Parts		
-23	NAS221-12	. SCREW (80205)	1	
-24	NAS623-3-4	. SCREW (80205)	1	
-25	NAS623-3-5	. SCREW (80205)	1	
-26	NAS623-3-7	. SCREW (80205)	1	
-27	NAS623-3-9	. SCREW (80205)	1	
-28	AN960D10	. WASHER (88044)	2	
-29	AN960D10L	. WASHER (88044)	1	
-30	MS21042L3	. NUT (96906)	4	
		*		
-31	NAS561P4-12	. . PIN (80205)	1	
	780663-1	. . ARM ASSY, internal canopy latch	1	
-32	52-1650-02	. . . NUT (72962)	1	
-33	NAS517-3-9	. . . SCREW (80205)	1	
-34	727603-1	. . . KNOB, canopy latch	1	
-35	727325-1	. . . SHIM, flap drive control	AR	
-36	727603-3	. . . KNOB, canopy latch	1	
-37	780706-1	. . . NAMEPLATE, internal canopy latch handle	1	
		Attaching Parts		
	AN535-0-3	. . . DRIVE SCREW (88044)	4	
		*		
-38	780663-3	. . . WELD ASSY, internal canopy latch	1	
	780658-1	. . LEVER ASSY, internal canopy latch handle	1	
-39	NAS561P2-4	. . . PIN (80205)	1	
-40	780658-9	. . . LEVER, internal canopy latch handle	1	
	762348	. . BRACKET ASSY, canopy latch internal handle	1	
-41	MS21042L3	. . . NUT (96906)	1	
-42	AN960D10	. . . WASHER (88044)	1	
-43	AN3-6A	. . . BOLT (88044)	1	
-44	726291-4	. . . SHIM, canopy latch handle	1	
-45	LS4217B11-0719	. . . BEARING, plain flanged press fit sintered (36659)	1	
-46	LS4217B8-0469	. . . BEARING, plain flanged press fit sintered (36659)	1	
-47	762348-3	. . . BRACKET, canopy latch internal handle	1	

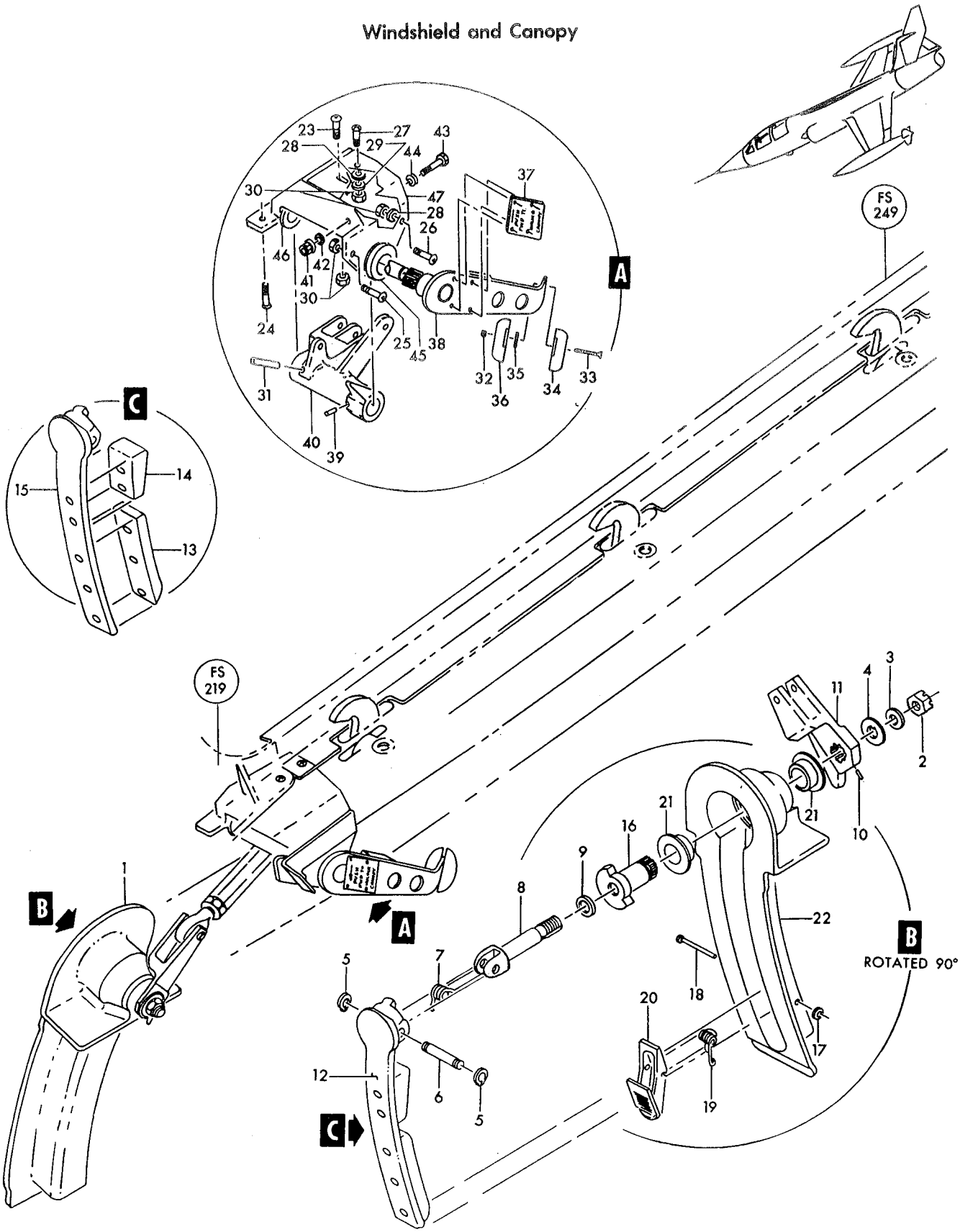

Figure 206— Canopy Release Handles

Figura e particolare	NDR	1 2 3 4 5 6 7 DENOMINAZIONE	Quant.	Codice applicab.
		CANOPY HINGE RELEASE MECHANISM		
207	783021-101	. RELEASE MECHANISM INSTL, canopy hinge *(see fig. 30 for reqd)* . . .	REF	
- 1	780503-1	. . HINGE, lower releasable LH *(see fig. 203)*	1	
- 2	728166-1	. . SEAL, canopy hinge	4	
- 3	780594-1	. . FITTING, canopy thruster fwd LH	1	
		Attaching Parts		
- 4	NAS623-3-9	. . SCREW (80205)	1	
- 5	NAS623-3-7	. . SCREW (80205)	1	
		——————— * ———————		
- 7	780873-1	. . SHIM, canopy thruster support fitting	AR	
- 8	AN960-416L	. . WASHER (88044)	2	
- 9	MS20392-3C17	. . PIN (96906)	1	
-10	AN960-416L	. . WASHER (88044)	2	
-11	MS20392-3C25	. . PIN (96906)	2	
-12	MS21042L4	. . NUT (96906)	1	
-13	728152-1	. . SHIM, hook adjustment	AR	
-14	AN960-416	. . WASHER (88044)	2	
-15	728150-1	. . BEARING, hinge release	2	
-16	NAS623-4-20	. . SCREW (80205)	1	
-17	MS21042L4	. . NUT (96906)	1	
-18	AN960D416	. . WASHER (88044)	1	
-19	NAS1104-14	. . BOLT (80205)	1	
-20	850194-101	. . ROD ASSY, hinge release mechanism forward	1	
-21	850194-103	. . . WELD ASSY, hinge release mechanism forward	1	
-22	AN316-5R	. . . NUT (88044)	1	
-23	AN936A516	. . . WASHER (88044)	1	
-24	726328-4	. . . CLEVIS, hinge release mechanism	1	
-25	780596-1	. . ROD ASSY, hinge release mechanism	1	
-26	AN316-5R	. . . NUT (88044)	1	
-27	AN936A516	. . . WASHER (88044)	1	
-28	728148-1	. . . CLEVIS, push rod	1	
-29	726328-4	. . . CLEVIS, push rod	1	
-30	850193-101	. . ROD ASSY, hinge release mechanism	1	
-31	850193-103	. . . WELD ASSY, hinge release mechanism rod	1	
-32	728149-1	. . . CLEVIS, hinge release	1	
-33	AN316-5R	. . . NUT (88044)	1	
-34	AN936A516	. . . WASHER (88044)	1	
-35	728147-1	. . . CLEVIS, push rod	1	
-36	780599-1	. . ROD ASSY, hinge release mechanism	1	
-37	780600-1	. . . CONTROL ROD, release mechanism	1	
-38	BRE4440	. . . BEARING, rod end (81376)	2	
-39	AN316-5R	. . . NUT (88044)	2	
-40	AN936A516	. . . WASHER (88044)	2	
-41	NAS428H4-14	. . BOLT (80205)	3	
-42	NAS509-4	. . NUT (80205)	3	
-43	MS21042L5	. . NUT (96906)	3	
-44	AN960-516	. . WASHER (88044)	3	
-45	728151-3	. . BUSHING, hinge release mechanism	3	
-46	NAS1105-13D	. . BOLT (80205)	3	
-47	MS21042L4	. . NUT (96906)	3	
-48	AN960-416L	. . WASHER (88044)	3	
-49	728150-3	. . BEARING, hinge mechanism	3	
-50	NAS1104-13	. . BOLT (80205)	3	
-51	MS21042L5	. . NUT (96906)	1	
-52	AN960-516L	. . WASHER (88044)	1	
-53	728152-1	. . WASHER, hinge release mechanism	AR	
-54	728151-1	. . BUSHING, hinge release mechanism	1	
-55	NAS1105-14D	. . BOLT (80205)	1	
-56	780590-1	. . BEAM, hinge adjuster	3	
-57	780593-1	. . HOOK, hinge release	2	

Windshield and Canopy

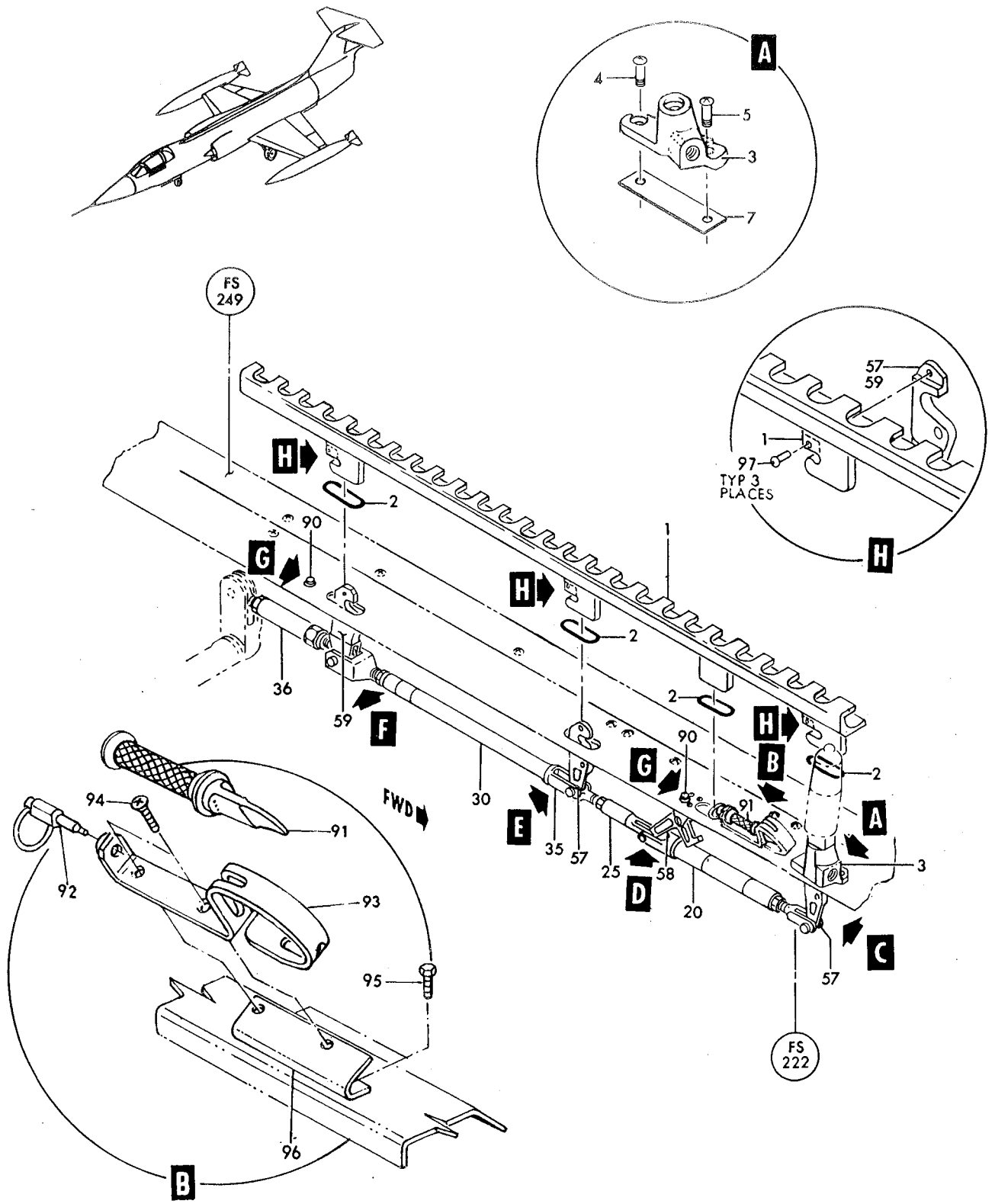

Figure 207— Canopy Hinge Release Mechanism (Sheet 1 of 2)

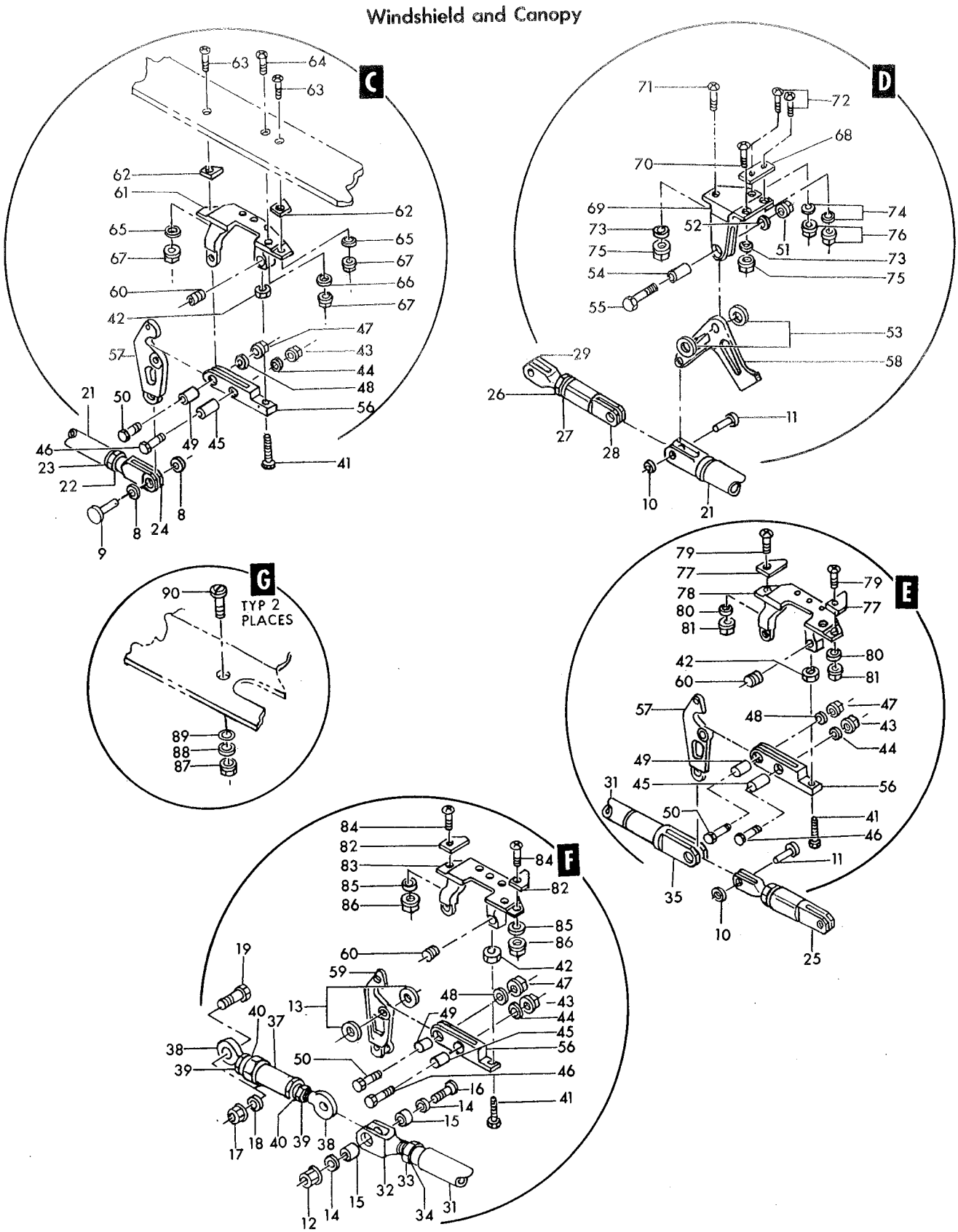

Figure 207— Canopy Hinge Release Mechanism (Sheet 2 of 2)

Figura e particolare	NDR	DENOMINAZIONE	Quant.	Codice applicab.
207-58	780592-1	LEVER, hinge lifter	1	
-59	780601-1	HOOK, hinge release aft	1	
-60	780607-1	BARREL NUT, bolt adjuster	3	
-61	780591-1	BRACKET, hinge release	1	
		Attaching Parts		
-62	780611-1	SHIM, hook bracket	AR	
-63	NAS1203-7	SCREW (80205)	2	
-64	NAS1203-6	SCREW (80205)	1	
-65	AN960D10	WASHER (88044)	2	
-66	LS881-2	WASHER, plain aluminum (36659)	1	
-67	MS21042L3	NUT (96906)	3	
		*		
-68	780610-1	SHIM, lifter bracket	AR	
-69	780609-3	BRACKET, hinge lifter lever	1	
		Attaching Parts		
-70	NAS1204-10	SCREW (80205)	1	
-71	NAS1204-6	SCREW (80205)	1	
-72	NAS1203-10	SCREW (80205)	2	
-73	AN960D416	WASHER (88044)	2	
-74	AN960D10	WASHER (88044)	2	
-75	MS21042L4	NUT (96906)	2	
-76	MS21042L3	NUT (96906)	2	
		*		
-77	780611-1	SHIM, hook bracket	AR	
-78	780597-1	BRACKET, hinge release	1	
		Attaching Parts		
-79	NAS1203-6	SCREW (80205)	2	
-80	LS881-2	WASHER, plain aluminum (36659)	2	
-81	MS21042L3	NUT (96906)	2	
		*		
-82	780611-1	SHIM, hook bracket	AR	
-83	780598-1	BRACKET, hinge release	1	
		Attaching Parts		
-84	NAS1203-6	SCREW (80205)	2	
-85	LS881-2	WASHER, plain aluminum (36659)	2	
-86	MS21042L3	NUT (96906)	2	
		*		
-87	MS21042L3	NUT (96906)	2	
-88	AN960D10	WASHER (88044)	AR	
-89	780608-1	SHIM, hinge register pin	AR	
-90	780605-1	PIN, lower hinge register	2	
	852001-101	TOOL INSTL, canopy breaker (NHA 849070-101)	1	
-91	61D4383-1	TOOL, breaker (80049)	1	
-92	3201-0403	PIN, retaining (84256)	1	
	852004-101	RETAINER INSTL, canopy breaker tool (NHA 849138-101)	1	
-93	852002-101	RETAINER, canopy breaker tool	1	
		Attaching Parts		
-94	NAS1203-3	SCREW (80205)	2	
-95	NAS1103-3	SCREW (80205)	2	
	AN960-10L	WASHER (88044)	4	
	MS21042L3	NUT (96906)	4	
		*		
-96	852003-101	ANGLE, canopy breaker tool	1	
	783020-101	COCKPIT RIGGING, upward ejection	REF	
-97	MS20470AD3	RIVET (96906) (this part must not be installed until system has been rigged per dwg 783020)	3	

Figura e particolare	NDR	DENOMINAZIONE 1 2 3 4 5 6 7	Quant.	Codice applicab.
		CANOPY RELEASE MECHANISM FUSELAGE STATION 255		
208	784937-1	. HOOK INSTL, canopy pivot (NHA 849141-101)	1	
	AN320-4	. . NUT (88044)	1	
- 1	AN24-12	. . BOLT (88044)	1	
- 2	780506-1	. . ROD ASSY, canopy pivot support lift arm	1	
- 3	726328-4	. . . CLEVIS, canopy latch rod	2	
- 4	AN316-5R	. . . NUT (88044)	2	
	AN960-416	. . . WASHER (88044)	1	
- 5	MS20392-3C33	. . . PIN (96906)	1	
- 6	780504-1	. . . FITTING, aft upper canopy lift fork	1	
- 7	780505-1	. . . TUBE ASSY, aft canopy pivot support lift	1	
	AN320-4	. . NUT (88044)	2	
- 8	AN24-16	. . BOLT (88044)	2	
- 9	780515-1	. . HOOK ASSY, canopy pivot	1	
	AN960-10	. . . WASHER (88044)	2	
-10	MS20392-2C27	. . . PIN (96906)	2	
-11	780860-1	. . . PLUNGER, canopy pivot hook	2	
-12	728153-1	. . . SPRING, canopy pivot hook	2	
-13	780515-3	. . . WELD ASSY, canopy pivot hook	1	
-14	782660-1	. . PIN, lifter fitting initiator	1	
-15	728239-1	. . ROD, canopy initiator sequencing	1	
-16	AN345-10	. . NUT (88044)	1	
-17	782659-1	. . CLEVIS, canopy initiator sequencing	1	
-18	MS20392-2C11	. . PIN (96906)	1	
	MS24665-151	. . COTTER PIN (96906)	3	
	MS24665-153	. . COTTER PIN (96906)	5	
-19	M27	. INITIATOR (aerno 93-0319) (see T.O. 11P3-3-4-3) (alternate to 10520550) *(see fig. 210 for reqd)*	REF	
	10520550	. INITIATOR (type M27) (see T.O. 11P3-3-4-3) (alternate to M27) *(see fig. 210 for reqd)*	REF	
	783980-1	. TORQUE TUBE INSTL, canopy release *(see fig. 30 for reqd)*	REF	
	780545-3	. . FITTING ASSY, thruster support	2	
		Attaching Parts		
-20	NAS1104-4	. . BOLT (80205)	4	
-21	AN960D416	. . WASHER (88044)	4	
		*		
-22	780545-1	. . . FITTING, thruster support	1	
	780543-501	. . TORQUE TUBE ASSY, canopy release	1	
		Attaching Parts		
-23	NAS623-3-3	. . SCREW (80205)	6	
-24	NAS623-3-4	. . SCREW (80205)	5	
-25	NAS623-3-5	. . SCREW (80205)	6	
-26	NAS623-3-6	. . SCREW (80205)	6	
-27	AN960D10	. . WASHER (88044)	AR	
-28	MS21042L3	. . NUT (96906)	23	
		*		
-29	MS21042L3	. . . NUT (96906)	2	
-30	MS21042L3	. . . NUT (96906)	4	
-31	AN960-10	. . . WASHER (88044)	2	
-32	AN960-10L	. . . WASHER (88044)	2	
-33	AN960-416	. . . WASHER (88044)	4	
-34	NAS623-3-20	. . . SCREW (80205)	2	
-35	NAS1104-20	. . . BOLT (80205)	4	
-36	780540-1	. . . LEVER, canopy release torque tube LH	1	
-37	780541-1	. . . LEVER, canopy release torque tube RH	1	
-38	MS21042L3	. . . NUT (96906)	6	
-39	AN960D10	. . . WASHER (88044)	6	
-40	AN960-10L	. . . WASHER (88044)	6	
-41	NAS623-3-3	. . . SCREW (80205)	6	
-42	MS16624-1131	. . . RING (96906)	2	

Windshield and Canopy

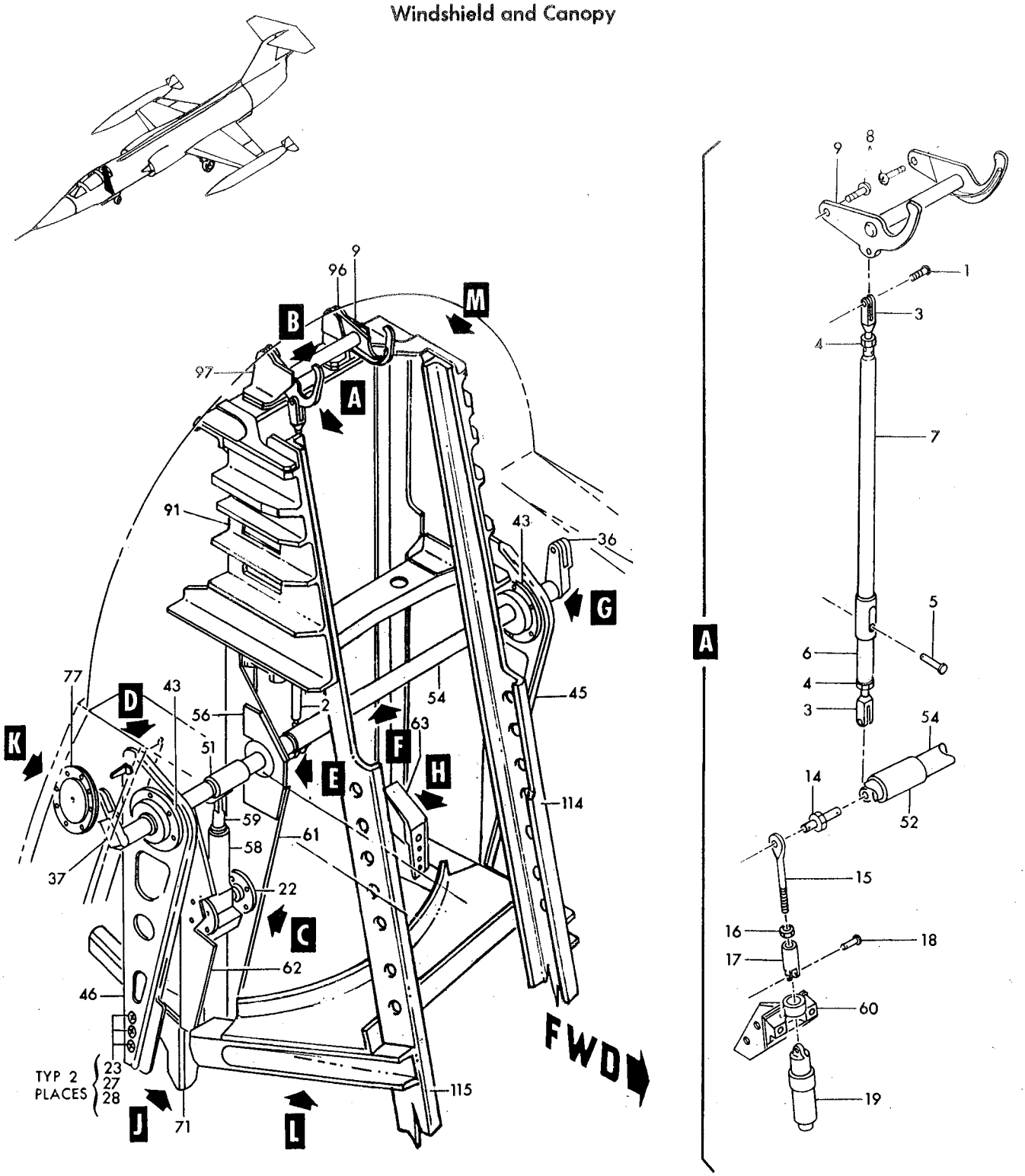

P56-15-826

Figure 208— Canopy Release Mechanism Fuselage Station 255 (Sheet 1 of 3)

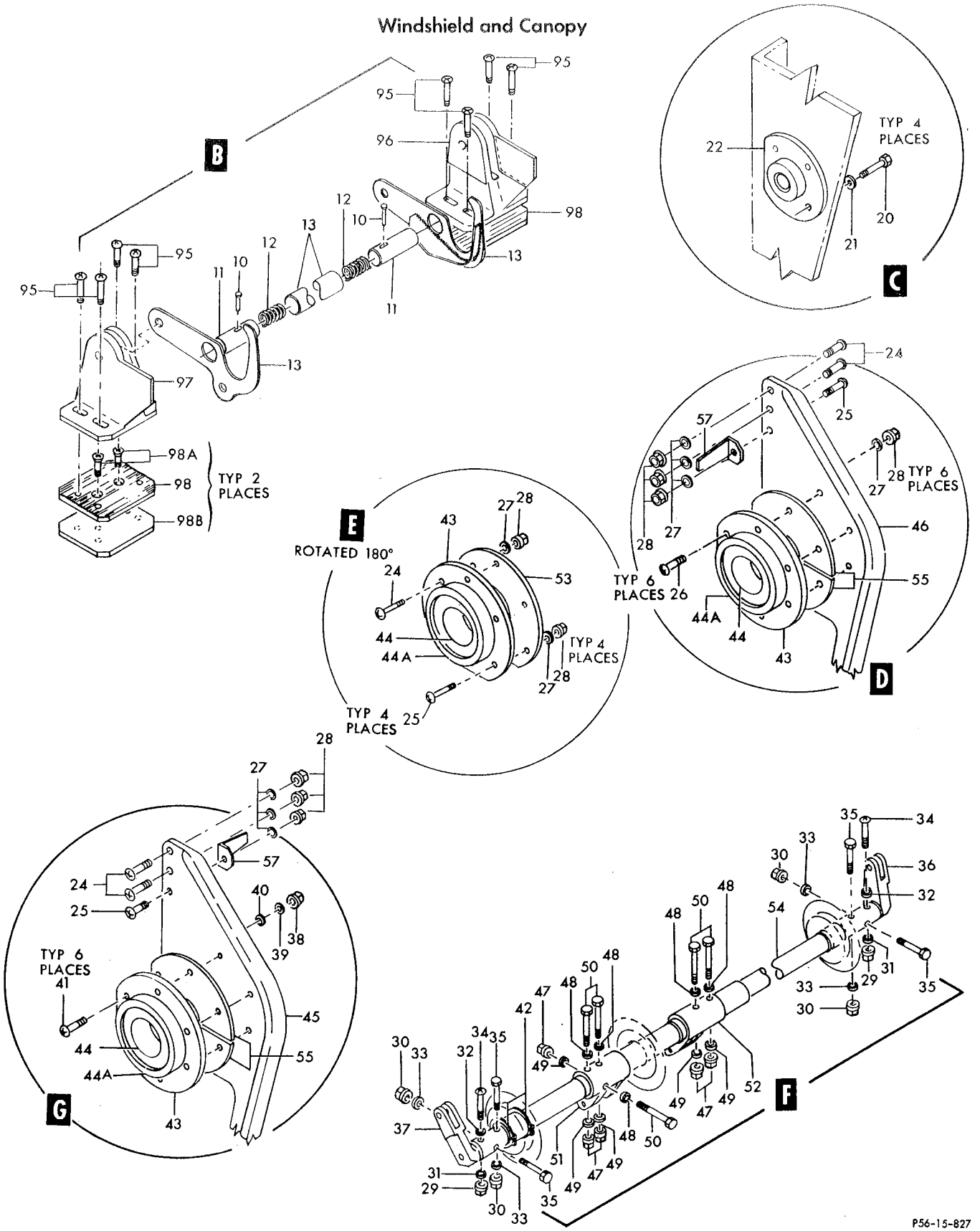

Figure 208— Canopy Release Mechanism Fuselage Station 255 (Sheet 2 of 3)

Windshield and Canopy

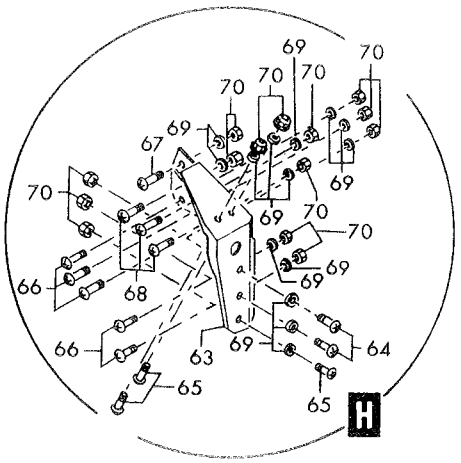

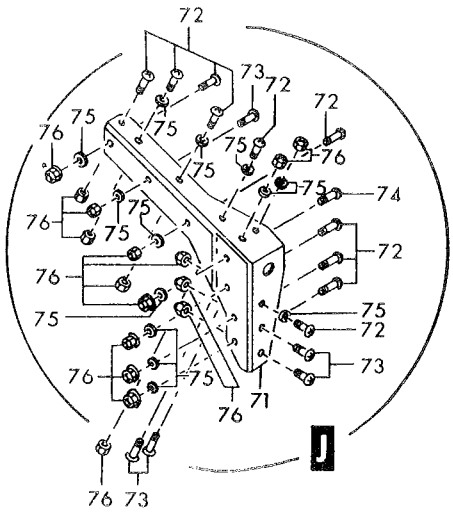

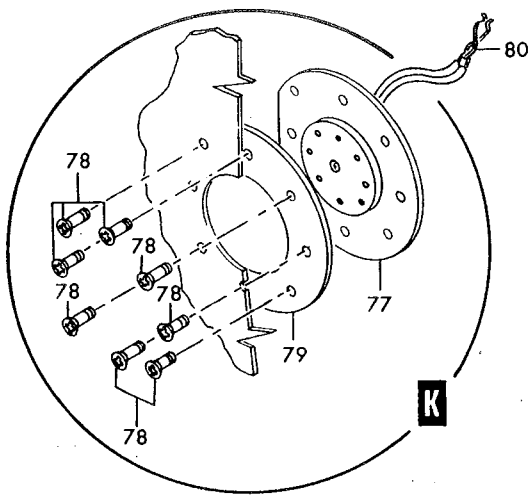

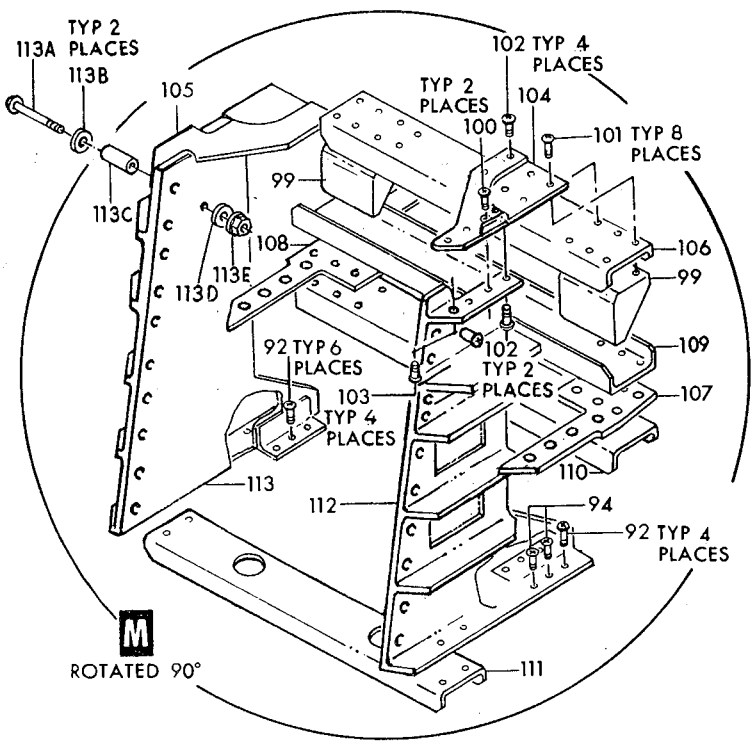

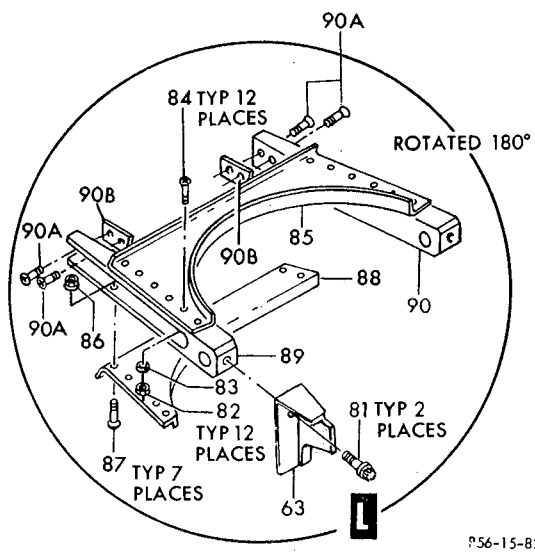

956-15-828

Figure 208— Canopy-Release Mechanism Fuselage Station 255 (Sheet 3 of 3)

Figura e particolare	NDR	DENOMINAZIONE (1 2 3 4 5 6 7)	Quant.	Codice applicab.
208-43	780687-1	. . . BEARING ASSY, torque tube	3	
-44	KP21BS	. . . . BEARING (21335)	1	
-44A	780537-1	. . . . HOUSING, torque tube bearing	1	
-45	786135-3	. . . MOUNT, torque tube bearing	1	
-46	786135-1	. . . MOUNT, torque tube bearing	1	
-47	MS21042L3	. . . NUT (96906)	5	
-48	AN960-416	. . . WASHER (88044)	5	
-49	AN960-416L	. . . WASHER (88044)	5	
-50	NAS1104-26	. . . BOLT (80205)	5	
-51	780542-1	. . . LEVER, canopy release torque tube	1	
-52	780542-3	. . . LEVER, canopy release torque tube	1	
-53	780941-1	. . . RETAINER, fus sta 255 torque tube	1	
-54	780535-1	. . . TORQUE TUBE ASSY, canopy release	1	
	787862-1	. . GUSSET, torque tube bearing housing	1	
-55	780549-1	. . SHIM, torque tube bearing fus sta 255	AR	
-56	780688-1	. . DOUBLER, sta 255 RH spt	1	
-57	780550-1	. . CLIP, fus sta 255 pulley bracket support	2	
-58	M13	. THRUSTER ASSY (type M13) (alternate to 10520971) (see T.O. 11P6-24-3) *(see fig. 210 for reqd)*	REF	
	10520971	. THRUSTER ASSY (type M13) (aerno 93-0752) (alternate to M13 (see T.O. 11P6-24-3) *(see fig. 210 for reqd)*	REF	
-59	780544-1	. FITTING, thruster adapter *(see fig. 210 for reqd)*	REF	
	783151-105	. BULKHEAD INSTL, fus sta 255 *(see fig. 30 for reqd)*	REF	
	783151-107	. . BULKHEAD ASSY, LH *(see fig. 36 for reqd)*	REF	
-60	783354-1	. . . GUARD ASSY, canopy initiator	1	
-61	784994-1	. . . SUPPORT, upward ejection	1	
-62	780547-3	. . . SUPPORT, upward ejection	1	
	774612-1	. . . BRACKET ASSY, canopy seal shut off valve *(see fig. 139)*	1	
	784406-1	. FITTING INSTL, seat gun lower support *(see fig. 30 for repd)*	REF	
-63	784405-1	. . FITTING, seat gun lower support LH	1	
		Attaching Parts		
-64	NAS623-3-5	. . SCREW (80205)	2	
-65	NAS623-3-6	. . SCREW (80205)	3	
-66	NAS623-3-7	. . SCREW (80205)	5	
-67	NAS623-3-8	. . SCREW (80205)	1	
-68	NAS623-3-9	. . SCREW (80205)	3	
-69	AN960D10	. . WASHER (88044)	14	
-70	MS21042L3	. . NUT (96906)	14	
		——————✲——————		
	784406-3	. FITTING INSTL, seat gun lower support *(see fig. 30 for reqd)*	REF	
-71	784403-1	. . FITTING, seat gun lower support	1	
		Attaching Parts		
-72	NAS623-3-5	. . SCREW (80205)	10	
-73	NAS623-3-6	. . SCREW (80205)	5	
-74	NAS623-3-7	. . SCREW (80205)	1	
-75	AN960D10	. . WASHER (88044)	13	
-76	MS21042L3	. . NUT (96906)	16	
	783031-1	. DOOR INSTL, canopy torque tube access *(see fig. 37 for reqd)*	REF	
-77	780622-1	. . DOOR ASSY, torque tube access *(see fig. 60)*	REF	
		Attaching Parts		
-78	NAS517-3-2	. . SCREW (80205) *(see fig. 60)*	REF	
		——————✲——————		
-79	780621-3	. . GASKET, torque tube access door *(see fig. 60)*	REF	
-80	RS107-60	. . CHAIN ASSY, access door (86831)	1	
	793284-1	. SUPPORT INSTL, lower C-2 seat (NHA 849138-101)	1	
	792437-1	. . SUPPORT ASSY, C-2 seat	1	
		Attaching Parts		
-81	NAS626-14	. . SCREW (80205)	2	
	MS20002C6	. . WASHER (96906)	2	

Figura e particolare	NDR	1	2	3	4	5	6	7	DENOMINAZIONE	Quant.	Codice applicab.
208	LS4893-6								RETAINER, barrel nut (36659)	2	
	2752-064								RETAINER, barrel nut (72962)	2	
-82	MS21042L3								NUT (96906)	12	
-83	AN960D10								WASHER (88044)	12	
-84	NAS623-3-5								SCREW (80205)	12	
-85	792437-7								STIFFENER, C-2 seat support	1	
-86	MS21042L3								NUT (96906)	7	
-87	NAS623-3-4								SCREW (80205)	7	
-88	792437-5								STIFFENER, C-2 seat support	1	
	792437-9								PLATE, C-2 seat support	1	
-89	792437-3								FITTING, C-2 seat support	1	
-90	792437-4								FITTING, C-2 seat support	1	
									Attaching Parts		
-90A	NAS1155-9								SCREW (80205)	4	
	AN960-516								WASHER (88044)	4	
	MS21042L5								NUT (96906)	4	
-90B	792437-27								SHIM, C-2 seat support	2	
-91	780520-1								SUPPORT INSTL, seat track and canopy (NHA 849141-101)	1	
	FL0242-108								SUPPORT ASSY, seat track and canopy (A0019)	1	
									Attaching Parts		
-92	NAS623-3-11								SCREW (80205)	10	
-94	NAS1203-11								SCREW (80205)	2	
	780512-1								SHIM, fus sta 255 bulkhead	2	
	MS21042L3								NUT (96906)	12	
-95	NAS623-3-11								SCREW (80205)	8	
	AN960D10								WASHER (under head) (88044)	8	
-96	780523-1								FITTING, canopy pivot hook	1	
-97	780523-2								FITTING, canopy pivot hook	1	
-98	780524-1								PLATE, serrated canopy fitting	2	
									Attaching Parts		
-98A	NAS517-3-6								SCREW (80205)	2	
-98B	780525-1								SHIM, canopy fitting	AR	
-99	780519-1								FITTING ASSY, fus sta 255 bulkhead	2	
-100	NAS517-3-6								SCREW (80205)	2	
-101	NAS623-3-3								SCREW (80205)	8	
-102	NAS623-3-5								SCREW (80205)	6	
-103	NAS623-3-7								SCREW (80205)	4	
	MS21042L3								NUT (96906)	18	
-104	FL0286-101								STRAP, upper seat rail support (A0019)	1	
-105	FL0286-102								STRAP, upper seat rail support (A0019)	1	
	NAS623-3-3								SCREW (80205)	4	
-106	780858-1								STIFFENER, upper fus sta 255 bulkhead	1	
	MS21042L3								NUT (96906)	16	
	NAS623-3-7								SCREW (80205)	16	
-107	FL0287-101								STRAP, lower seat rail support (A0019)	1	
-108	FL0287-102								STRAP, lower seat rail support (A0019)	1	
-109	780518-1								STIFFENER, fus sta 255 bulkhead	1	
-110	780518-3								STIFFENER, fus sta 255 bulkhead	1	
	MS21042L4								NUT (96906)	4	
	NAS623-4-4								SCREW (80205)	4	
-111	780520-11								CHANNEL, seat track and canopy	1	
-112	FL0285-101								SUPPORT, side seat rail (A0019)	1	
-113	FL0285-102								SUPPORT, side seat rail (A0019)	1	
-113A	NAS623-3-21	A.							SCREW (80205)	2	
-113B	LS881-4	A.							WASHER (36659)	2	
-113C	NAS43DD3-63	A.							SPACER (80205)	2	

Figura e particolare	NDR	1 2 3 4 5 6 7 DENOMINAZIONE	Quant.	Codice applicab.
208-113D	AN960D10	A. . . WASHER (88044)	2	
-113E	MS21042L3	A. . . NUT (96906)	2	
-114	FL0306-101	. RAIL, ejection seat (A0019) *(see fig. 212 for reqd)*	REF	
-115	FL0306-102	. RAIL, ejection seat (A0019) *(see fig. 212 for reqd)*	REF	

A - Reqd per AA.1F-104-OT-767

Figura e particolare	NDR	DENOMINAZIONE 1 2 3 4 5 6 7	Quant.	Codice applicab.
		CANOPY SUPPORTS AND HOLD OPEN MECHANISM		
209	FL0242-103	CANOPY ASSY, complete (A0019) *(see fig. 203 for reqd)*	REF	
- 1	780580-1	SUPPORT ASSY, canopy RH	1	
		Attaching Parts		
- 2	NAS517-3-7	SCREW (80205)	4	
- 3	NAS517-3-13	SCREW (80205)	1	
- 4	NAS517-4-13	SCREW (80205)	2	
- 5	AN960D10	WASHER (88044)	5	
- 6	AN960D416	WASHER (88044)	2	
- 7	780560-1	SHIM, canopy support	AR	
- 8	780784-1	SHIM, canopy support	AR	
- 9	780778-1	SHIM, canopy support	AR	
-10	MS21042L3	NUT (96906)	5	
-11	MS21042L4	NUT (96906)	2	
		*		
-12	780557-1	LEVER ASSY, canopy hold open release	1	
-13	780555-1	. LEVER, canopy hold open release	1	
-14	780556-1	. SHAFT, canopy hold open release	1	
-15	780558-1	. ARM, canopy hold open release	1	
-16	NAS561P4-8	. PIN (80205)	2	
-17	AN960C516L	. WASHER (88044)	1	
-18	MS20392-2C9	PIN (96906)	1	
-19	NAS645-8SL	FORK (80205)	1	
-20	NAS651-16S	CLIP (80205)	2	
-21	NAS649B8S	BARREL (80205)	1	
-22	780783-1	CABLE ASSY, canopy hold open release fwd	1	
	780783-3	. CABLE, canopy hold open release fwd	1	
-23	NAS650S2RH	. TERMINAL (80205)	1	
-24	MS20663C2	. BALL END (96906)	1	
-25	RA2258-2	. TERMINAL, disconnect (80097)	1	
-26	MS20392-2C7	PIN (96906)	1	
-27	780781-1	CABLE ASSY, canopy hold open release aft	1	
	780781-3	. CABLE, canopy hold open release aft	1	
-28	MS20663C2	. BALL END, wire rope, swaging-double shank (96906)	13	
-29	MS20664C2	. BALL END, wire rope, swaging-single shank (96906)	1	
-30	RA2500-2	. TERMINAL, strap cable (80097)	1	
-31	780577-1	TUBE ASSY, canopy hold open cable RH	1	
-32	780562-1	TUBE ASSY, canopy pivot	1	
		Attaching Parts		
-33	NAS1205-10	SCREW (80205)	6	
		*		
-34	AN960-516	WASHER (88044)	6	
-35	780566-1	SHIM, canopy pivot tube	AR	
-36	MS21042L5	NUT (96906)	6	
-37	780579-1	SUPPORT ASSY, canopy LH *(see fig. 141)*	1	
		Attaching Parts		
-38	NAS517-3-2	SCREW (80205)	2	
-39	NAS517-3-12	SCREW (80205)	4	
-40	AN960D10	WASHER (88044)	6	
-41	780782-1	SHIM, canopy LH support	AR	
-42	780784-1	SHIM, canopy RH support	AR	
-43	MS21042L3	NUT (96906)	6	
		*		
-44	780576-1	TUBE ASSY, canopy hold open cable LH	1	
-45	MS21042L3	NUT (96906)	3	
-46	AN960D10	WASHER (88044)	3	
-47	NAS623-3-28	SCREW (80205)	1	
-48	NAS623-3-32	SCREW (80205)	1	
-49	NAS623-3-34	SCREW (80205)	1	
-50	249996-2	PIN, pulley guard	1	

Windshield and Canopy

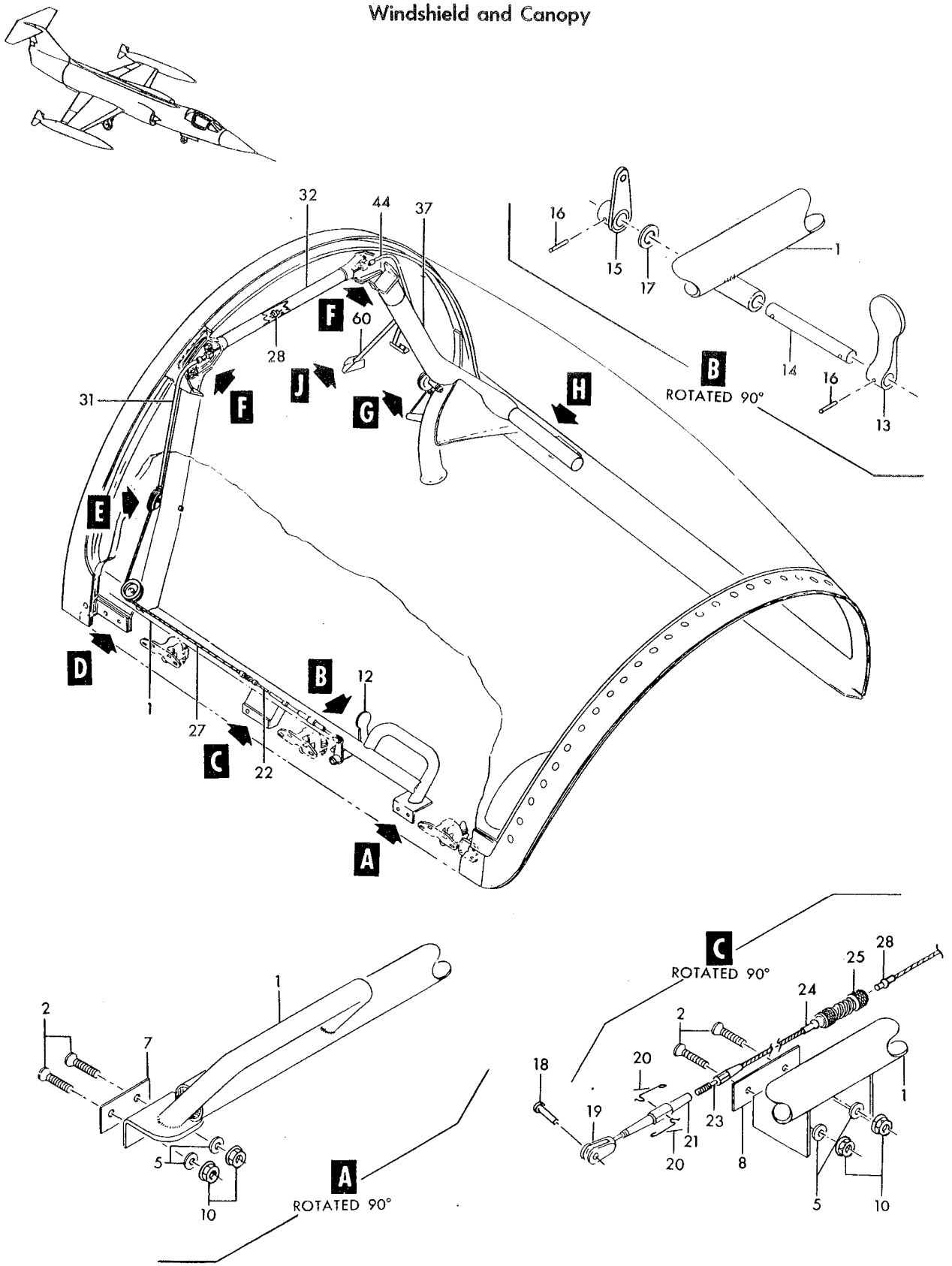

Figure 209— Canopy Supports and Hold Open Mechanism (Sheet 1 of 2)

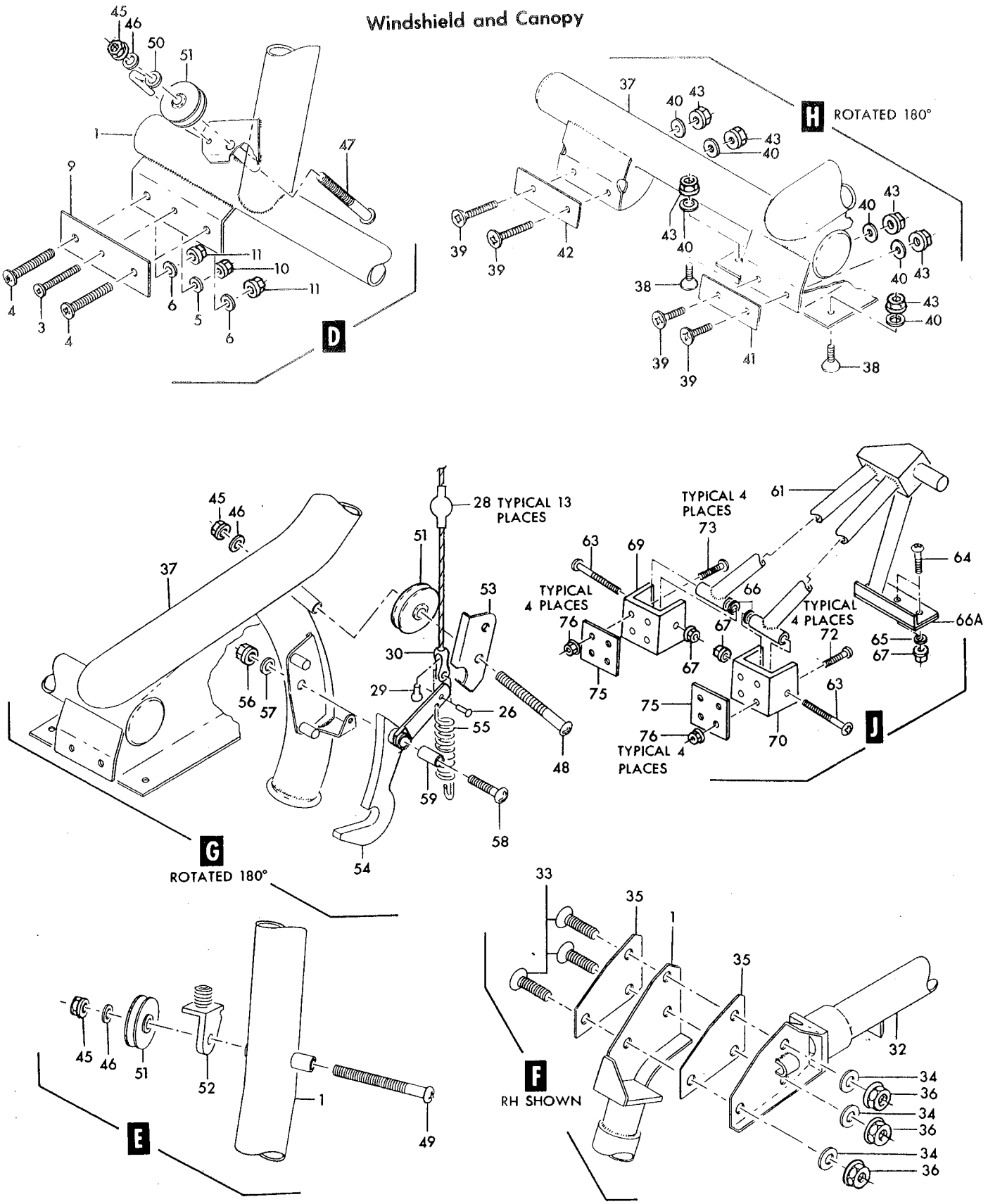

Figure 209— Canopy Supports and Hold Open Mechanism (Sheet 2 of 2)

Figura e particolare	NDR	1 2 3 4 5 6 7 DENOMINAZIONE	Quant.	Codice applicab.
209-51	M1B	PULLEY, control (83451)	3	
-52	725442	BRACKET, release cable	1	
-53	780575-1	GUARD, release cable	1	
-54	780571-1	HOOK, canopy hold open	1	
-55	726367-3	SPRING, canopy hold open pawl	1	
-56	MS21042L3	NUT (96906)	1	
-57	AN960D10	WASHER (88044)	1	
-58	NAS623-3-14	SCREW (80205)	1	
-59	LS3859-3-22	BUSHING, plain flanged (36659)	1	
-60	780583-1	STOP INSTL, canopy open (NHA 849141-101)	1	
-61	780583-3	STOP ASSY, canopy full open	1	
		Attaching Parts		
-63	NAS623-3-24	SCREW (80205)	2	
-64	NAS623-3-8	SCREW (80205)	2	
-65	AN960D10	WASHER (88044)	2	
-66	726291-3	SHIM, canopy stud latch	AR	
-66A	780587-1	SHIM, canopy stop	AR	
-67	MS21042L3	NUT (96906)	4	
-69	780586-3	SUPPORT, canopy full open stop brace tube	1	
-70	780586-1	SUPPORT, canopy full open stop brace tube	1	
		Attaching Parts		
-72	NAS623-3-10	SCREW (80205)	4	
-73	NAS623-3-11	SCREW (80205)	4	
-75	780588-1	SHIM, canopy stop	AR	
-76	MS21042L3	NUT (96906)	8	

Figura e particolare	NDR	DENOMINAZIONE 1 2 3 4 5 6 7	Quant.	Codice applicab.
		CANOPY EMERGENCY JETTISON PYROTECHNICS AND PIPING		
210	792794-101	PLUMBING INSTL, upward ejection canopy jettison *(see fig. 30 for reqd)*	REF	
- 1	AN833-4C	ELBOW (88044)	2	
- 2	AN6289C4	NUT (88044)	2	
- 3	AN6290-4	GASKET (88044)	2	
- 4	LS4764-4	RING, hydraulic backup (36659)	2	
- 5	AN742D10	CLAMP (88044)	4	
- 6	MS21919DG5	CLAMP (96906)	4	
		Attaching Parts		
- 6A	AN520-10R10	SCREW (88044)	1	
	NAS1096-3-36	SCREW (80205)	1	
- 6B	AN960D10	WASHER (88044)	1	
	LS607-16	SPACER, phenolic (36659)	1	
	MS35650-302	NUT (96906)	1	
- 6C	MS21042L3	NUT (96906)	1	
		*		
- 7	781742-9	HOSE ASSY, canopy jettisoning system	2	
- 8	R650006-4-0270	HOSE ASSY, canopy jettisoning system (00624) (Lockheed spec dwg 740047-43) (alternate to 725031-4-0270, R3800-4-0270 and 1241017-4-0270)	1	
	725031-4-0270	HOSE ASSY, canopy jettisoning system (00624) (Lockheed spec dwg 740047-43) (alternate to R650006-4-0270, R3800-4-0270 and 1241017-4-0270)	REF	
	R3800-4-0270	HOSE ASSY, canopy jettisoning system (50599) (Lockheed spec dwg 740047-43) (alternate to R650006-4-0270, 725031-4-0270 and 1241017-4-0270)	REF	
	1241017-4-0270	HOSE ASSY, canopy jettisoning system (98441) (Lockheed spec dwg 740047-43) (alternate to R650006-4-0270, 725031-4-0270 and R3800-4-0270)	REF	
- 9	781737-13	DECAL, canopy jettison hose (tee, AN824-4C)	1	
-10	781737-15	DECAL, canopy jettison hose (elbow, AN837-4C)	1	
-11	781737-49	DECAL, canopy jettison hose (canopy jettisoning system)	1	
-12	781737-57	DECAL, escape system hose (normal-empty-emergency-hot gases)	1	
-13	AN824-4C	TEE (88044)	1	
-21	AN742D6	CLAMP (88044)	1	
-22	AN743B12	BRACKET (88044)	1	
-23	MS21919DG5	CLAMP (96906)	8	
		Attaching Parts		
-23A	AN520-10R10	SCREW (88044)	1	
	AN520-10R16	SCREW (88044)	1	
-23B	NAS1096-3-14	SCREW (80205)	1	
-23C	NAS43DD3-32	SPACER (80205)	1	
	LS607-16	SPACER, phenolic (36659)	1	
-24	AN960D10	WASHER (88044)	1	
-25	MS21042L3	NUT (96906)	1	
		*		
-26	781742-31	HOSE ASSY, canopy jettisoning system	1	
-27	R650006-4-0940	HOSE ASSY, canopy jettisoning system (00624) (Lockheed spec dwg 740047-61) (alternate to 725031-4-0940, R3800-4-0940 and 1241017-4-0940)	1	
	725031-4-0940	HOSE ASSY, canopy jettisoning system (00624) (Lockheed spec dwg 740047-61) (alternate to R650006-4-0940, R3800-4-0940 and 1241017-4-0940)	REF	
	R3800-4-0940	HOSE ASSY, canopy jettisoning system (50599) (Lockheed spec dwg 740047-61) (alternate to R650006-4-0940, 725031-4-0940 and 1241017-4-0940)	REF	
	1241017-4-0940	HOSE ASSY, canopy jettisoning system (98441) (Lockheed spec dwg 740047-61) (alternate to R650006-4-0940, 725031-4-0940 and R3800-4-0940)	REF	
-28	781737-1	DECAL, upward ejection seat hose (initiator, T25)	1	

Windshield and Canopy

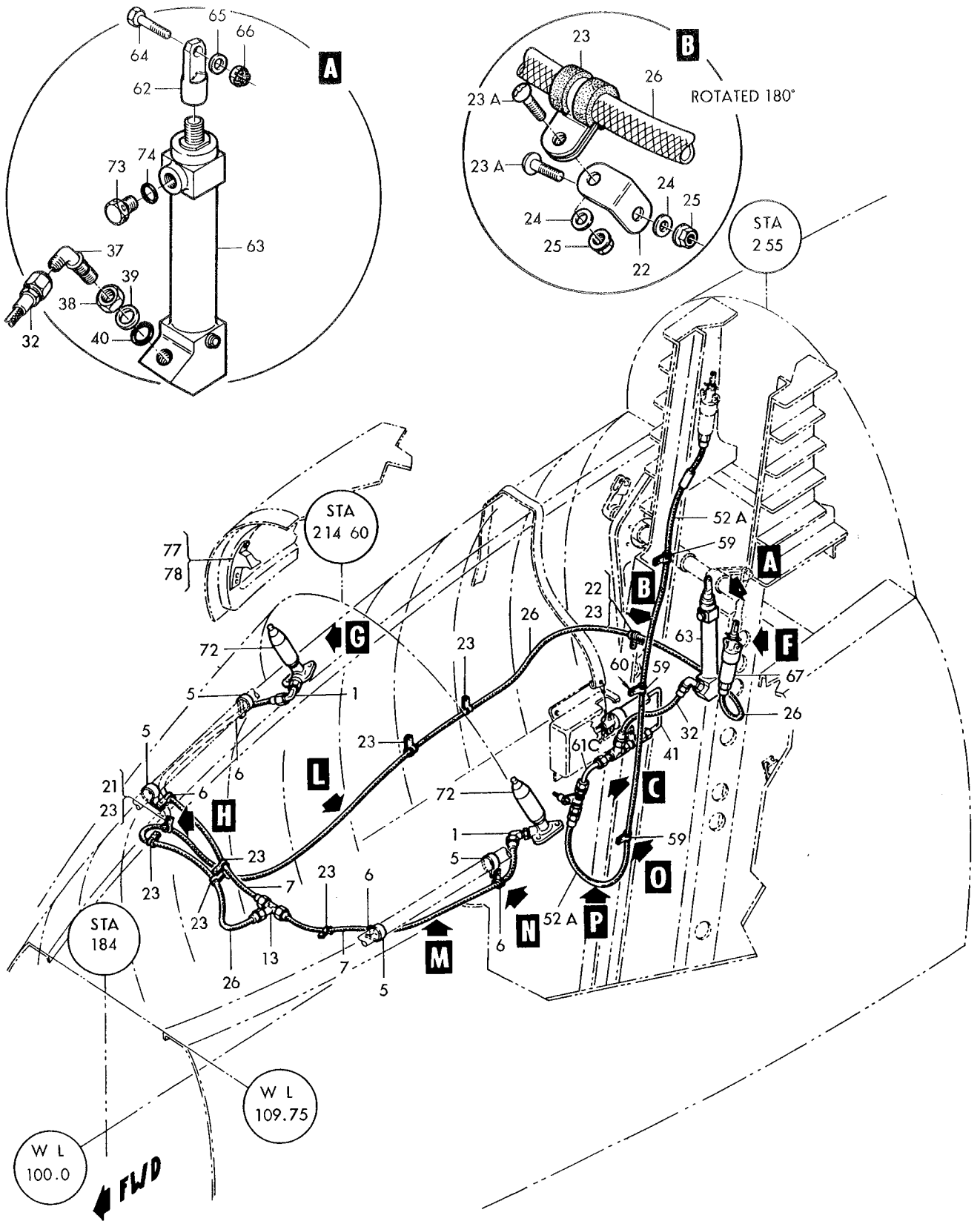

Figure 210–Canopy Emergency Jettison Pyrotechnics and Piping (Sheet 1 of 3)

Windshield and Canopy

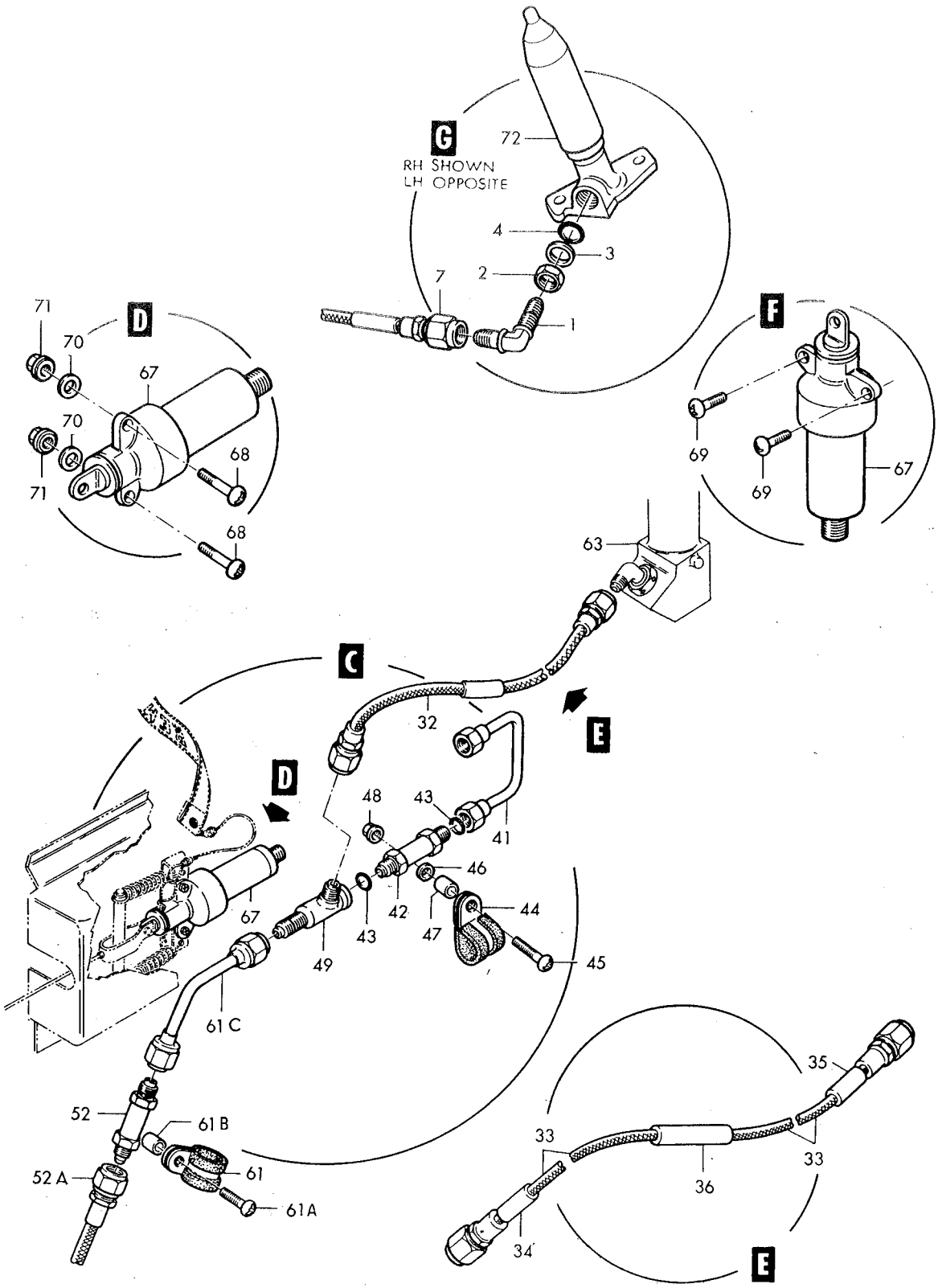

Figure 210–Canopy Emergency Jettison Pyrotechnics and Piping (Sheet 2 of 3)

Windshield and Canopy

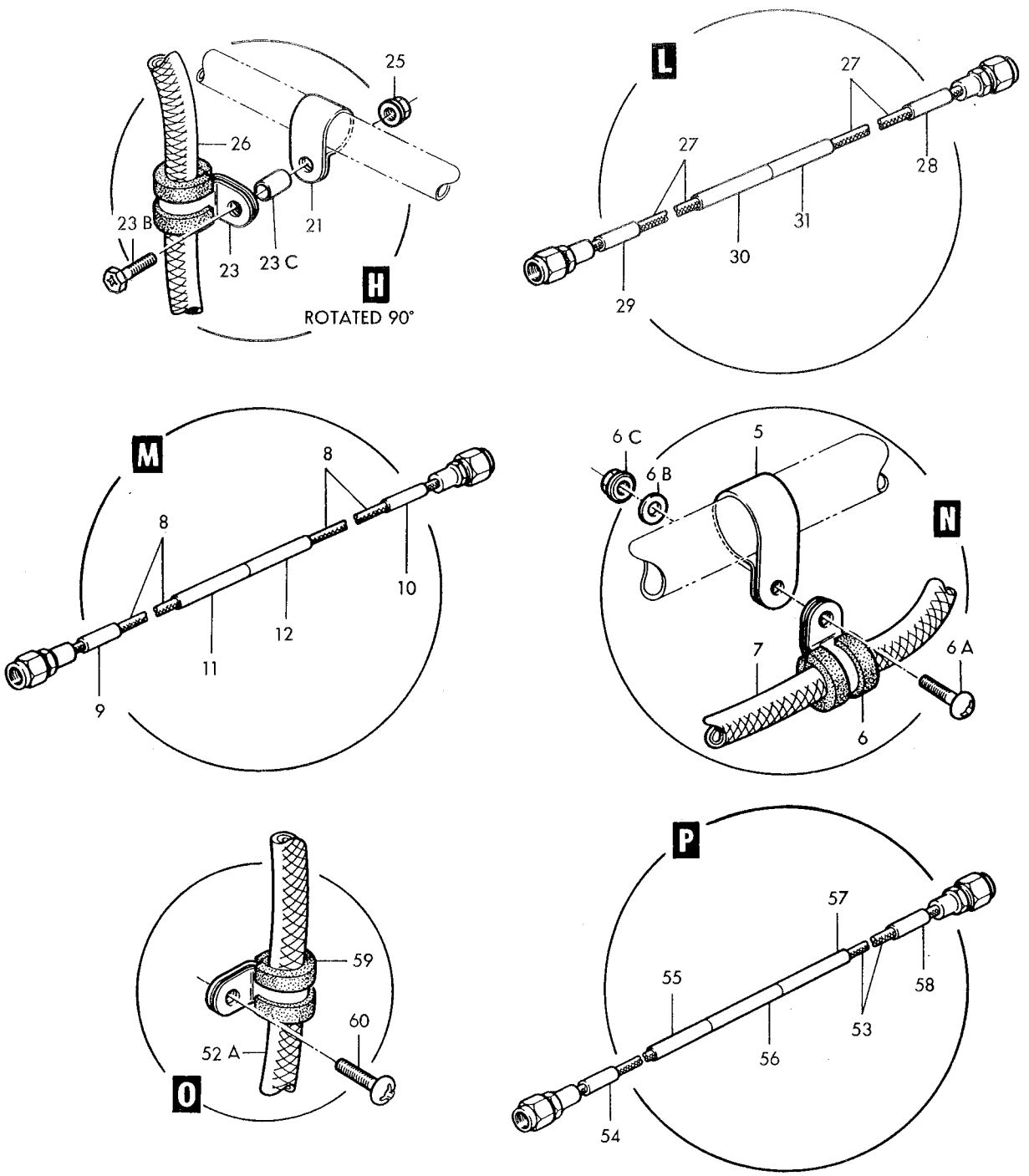

Figure 210–Canopy Emergency Jettison Pyrotechnics and Piping (Sheet 3 of 3)

Figura e particolare	NDR	1 2 3 4 5 6 7 DENOMINAZIONE	Quant.	Codice applicab.
210-29	781737-13	. . . DECAL, canopy jettison hose (tee, AN824-4C)	1	
-30	781737-49	. . . DECAL, canopy jettison hose (canopy jettisoning system) . . .	1	
-31	781737-57	. . . DECAL, escape system hose (normal-empty-emergency-hot gases)	1	
-32	781742-3	. . HOSE ASSY, canopy jettisoning system	1	
-33	R650006-4-0086	. . . HOSE ASSY, canopy jettisoning system (00624) (Lockheed spec dwg 740047-35) (alternate to 725031-4-0086, R3800-4-0086 and 1241017-4-0086)	1	
	725031-4-0086	. . . HOSE ASSY, canopy jettisoning system (00624) (Lockheed spec dwg 740047-35) (alternate to R650006-4-0086, R3800-4-0086 and 1241017-4-0086)	REF	
	R3800-4-0086	. . . HOSE ASSY, canopy jettisoning system (50599) (Lockheed spec dwg 740047-35) (alternate to R650006-4-0086, 725031-4-0086 and 1241017-4-0086)	REF	
	1241017-4-0086	. . . HOSE ASSY, canopy jettisoning system (98441) (Lockheed spec dwg 740047-35) (alternate to R650006-4-0086, 725031-4-0086 and R3800-4-0086)	REF	
-34	781737-5	. . . DECAL, canopy jettison hose (tee, AN784-4)	1	
-35	781737-7	. . . DECAL, escape system hose elbow (elbow AN833-4C)	1	
-36	781737-53	. . . DECAL, escape system hose (canopy jettisoning system) . . .	1	
-37	AN833-4C	. . ELBOW (88044)	1	
-38	AN6289C4	. . NUT (88044)	1	
-39	AN6290-4	. . GASKET (88044)	1	
-40	LS4764-4	. . RING, hydraulic backup (36659)	1	
-41	778105-83	. . TUBE ASSY, upward ejection canopy	1	
-42	AN6249-4	. . VALVE (88044)	1	
-43	AN6290-4	. . GASKET (88044)	2	
-44	MS21919DG11	. . CLAMP (96906)	1	
		Attaching Parts		
-45	AN520-10R12	. . SCREW (88044)	1	
-46	AN960D10	. . WASHER (88044)	1	
-47	LS607-10	. . SPACER, phenolic (36659)	1	
-48	MS21042L3	. . NUT (96906)	1	
		———————*———————		
-49	AN784-4	. . TEE (88044)	1	
-52	AN6249-4	. . VALVE (88044)	1	
-52A	FL0248-000	. . HOSE ASSY, canopy jettisoning system (A0019)	1	
-53	R3800-4-0510	. . . HOSE ASSY, canopy jettisoning system (50599) (Lockheed spec dwg 740047-15) (alternate to 1241017-4-0510, R650006-4-0510 and 725031-4-0510)	1	
	1241017-4-0510	. . . HOSE ASSY, canopy jettisoning system (98441) (Lockheed spec dwg 740047-15) (alternate to R3800-4-0510, R650006-4-0510 and 725031-4-0510)	REF	
	R650006-4-0510	. . . HOSE ASSY, canopy jettisoning system (00624) (Lockheed spec dwg 740047-15) (alternate to R3800-4-0510, 1241017-4-0510 and 725031-4-0510)	REF	
	725031-4-0510	. . . HOSE ASSY, canopy jettisoning system (00624) (Lockheed spec dwg 740047-15) (alternate to R3800-4-0510 1241017-4-0510 and R650006-4-0510)	REF	
-54	781737-3	. . . DECAL, upward ejection seat hose (valve AN6249-4)	1	
-55	781737-49	. . . DECAL, canopy jettison hose (canopy jettisoning system) . . .	1	
-56	781737-57	. . . DECAL, escape system hose (normal empty emergency hot gases)	1	
-57	781737-53	. . . DECAL, canopy jettisoning system	1	
-58	781737-1	. . . DECAL, Initiator T25	1	
-59	MS21919DG6	. . CLAMP (96906) (NHA FL0242-000)	3	
-60	AN520-10R10	. . SCREW (88044)	2	
-61	MS21919DG10	. . CLAMP (96906)	1	
-61A	AN515-8R16	. . SCREW (86044)	1	
-61B	LS607-12	. . SPACER (36659)	1	
-61C	FL0247-000	. . TUBE ASSY, initiator (A0019)	1	
	784104-103	. PYROTECHNIC INSTL, upward canopy jettison (NHA 849070-101) . . .	1	

Figura e particolare	NDR	1	2	3	4	5	6	7	DENOMINAZIONE	Quant.	Codice applicab.
210	783980-3								THRUSTER INSTL, sta 255 bulkhead canopy release	1	
-62	780544-1								FITTING, thruster adapter *(see fig. 208)*	1	
-63	M13								THRUSTER ASSY (type M13) (alternate to 10520971) (see T.O. 11P6-24-3) *(see fig. 208)*	1	
	10520971								THRUSTER ASSY (type M13) (aerno 93-0752) (alternate to M13 (see T.O. 11P6-24-3) *(see fig. 208)*	REF	
-64	NAS1105-14D								BOLT (80205)	1	
-65	AN960D516								WASHER (88044)	1	
-66	AN310-5								NUT (88044)	1	
	MS24665-134								COTTER PIN (96906)	1	
-67	M27								INITIATOR (aerno 93-0319) (alternate to 10520550) (see T.O. 11P3-3-4-3) *(see fig. 208 and 211)*	2	
	10520550								INITIATOR (type M27) (alternate M27) (see T.O. 11P3-3-4-3) *(see fig. 208 and 211)*	REF	
									Attaching Parts		
-68	NAS623-3-12								SCREW (80205)	2	
-69	NAS623-3-4								SCREW (80205)	2	
-70	AN960D10								WASHER (88044)	2	
-71	MS21042L3								NUT (96906)	2	
-72	M11MB								THRUSTER ASSY (U1604) (see AA13-IQ7A-4)	2	
	MBCJ2086								CARTRIDGE (U1604) (see AA13-IQ7A-4)	1	
-73	AN814-4CL								PLUG (88044)	1	
-74	AN6290-4								GASKET (88044)	1	
	FL0313-100D	B.							STREAMER ASSY, canopy initiator safety pin (A0019)	1	
-77	FL0242-110								ANVIL ASSY, canopy thruster forward *(see fig. 203 for reqd)* (A0019)	REF	
-78	FL0242-111								ANVIL ASSY, canopy thruster forward *(see fig. 203 for reqd)* (A0019)	REF	
	FL1012-000	A.							BRACKET INSTL STOWAGE, T1517/T1524 control (NHA 850191-101)	1	
	63C40534	A.							BRACKET	1	
									Attaching Parts		
	NAS623-3-6	A.							SCREW (80203)	4	
	AN960D10	A.							WASHER (88044)	2	
	MS21042L3	A.							NUT (96906)	2	
	63B40578	A.							PLATE	1	
	63B40689	A.							STRAP ASSY	1	
									Attaching Parts		
	AN3-5A	A.							BOLT (88044)	3	
	AN960-10	A.							WASHER (88044)	3	
	MS20365-1032	A.							NUT (96906)	3	

A - Only for FB
B - Reqd per AA.13-IQ7A-OT103C and Modified per AA.1F-104-OT-681A

Figura e particolare	NDR	1 2 3 4 5 6 7 DENOMINAZIONE	Quant.	Codice applicab.
		CANOPY EMERGENCY JETTISON HANDLES AND CABLES		
211	784104-101	. JETTISON INSTL, upward canopy (NHA 850168-101)	1	6701-6720
	784104-107	. JETTISON INSTL, upward canopy (NHA 850168-101)	1	6721-
-1	784104-7	. . CABLE ASSY, upward canopy jettison	1	
-2	784104-9	. . . CABLE, upward canopy jettison	1	
-3	784104-11	. . . CABLE, upward canopy jettison	1	
-4	781620-1	. . . TERMINAL, canopy jettison initiator cable	1	
-5	MS20392-2C9	. . . PIN (96906)	1	
	MS24665-140	. . . COTTER PIN (96906)	1	
-6	728195-1	. . . TERMINAL, canopy jettison initiator cable	1	
-7	778105-77	. . . TUBE ASSY, cable conduit	1	
-8	778105-119	. . . TUBE ASSY, cable conduit	1	
-9	728196-1	. . . SPRING, canopy jettison initiator cable	2	
-10	781642-1	. . . ARM, initiator cable sag control	1	
-11	MS16624-1031	. . . RING (96906)	2	
-12	782083-1	. . . HANDLE, canopy jettison external	1	
-13	MS20668-3	. . . TERMINAL (96906)	1	
-14	18-2G	. . . SLEEVE, cable oval (76691)	2	
-15	780801-3	. . . SEAL, canopy jettison	1	
-15A	MS20664C3	. . . TERMINAL (96906)	1	
-16	781668-1	. . BRACKET, canopy jettison initiator mounting	1	
	785798-101	. . CABLE AND HANDLE ASSY, emergency escape system	1	6701-6720
	785798-103	. . . CABLE AND HANDLE ASSY, emergency escape system	1	6721-
-17	785798-3	. . . CABLE, emergency escape system	1	
-18	MS20664C3	. . . TERMINAL (96906)	1	
-19	MS20667-3	. . . TERMINAL (96906)	1	
-20	785800-101	A. . . HANDLE, canopy jettison (Reworked and reidentified as 846106-103 per CA11F-104G-149) *(see fig. 222)*	1	6701-6720
	846106-103	B. . . HANDLE, canopy jettison *(see fig. 222)*	1	6721-
-21	781777-1	. . CLIP ASSY, canopy jettison external handle	2	
-22	LS2823-2	. . CABLE LOCK, canopy jettison external handle (36659)	1	
-23	LS2823-3	. . CABLE LOCK, canopy jettison external handle (36659)	1	
-24	737-4-2-8	. . CLAMP, cushioned loop type support (00502)	1	
-25	AN743B12	. . BRACKET (88044)	1	
-26	MS21919DG4	. . CLAMP (96906)	3	
		Attaching Parts		
-27	AN520-10R8	. . SCREW (88044)	2	
-28	AN520-10R12	. . SCREW (88044)	1	
-29	AN520-10R16	. . SCREW (88044)	2	
-29A	AN960D10	. . WASHER (88044)	5	
-30	LS607-16	. . SPACER, phenolic (36659)	2	
-30A	LS607-8	. . SPACER, phenolic (36659)	1	
-30B	NAS680A3	. . NUT (80205)	1	
-31	MS21042L3	. . NUT (96906)	4	
		*		
-33	785801-109	. . COVER, initiator	1	
		Attaching Parts		
-34	AN507-832R8	. . SCREW (88044)	2	
-35	AN515-8R8	. . SCREW (88044)	2	
-36	NAS391-8P	. . WASHER (80205)	2	
-37	LS884-8	. . WASHER, notched (36659)	2	
		*		
-38	MS20392-2C9	. . PIN (96906)	1	
-39	782081-1	. . SUPPORT ASSY, canopy jettison system	1	
		Attaching Parts		
-40	AN515-8R12	. . SCREW (88044)	2	
-41	AN960D8	. . WASHER (88044)	2	
		*		
-42	782082-1	. . SUPPORT ASSY, canopy jettison system	1	

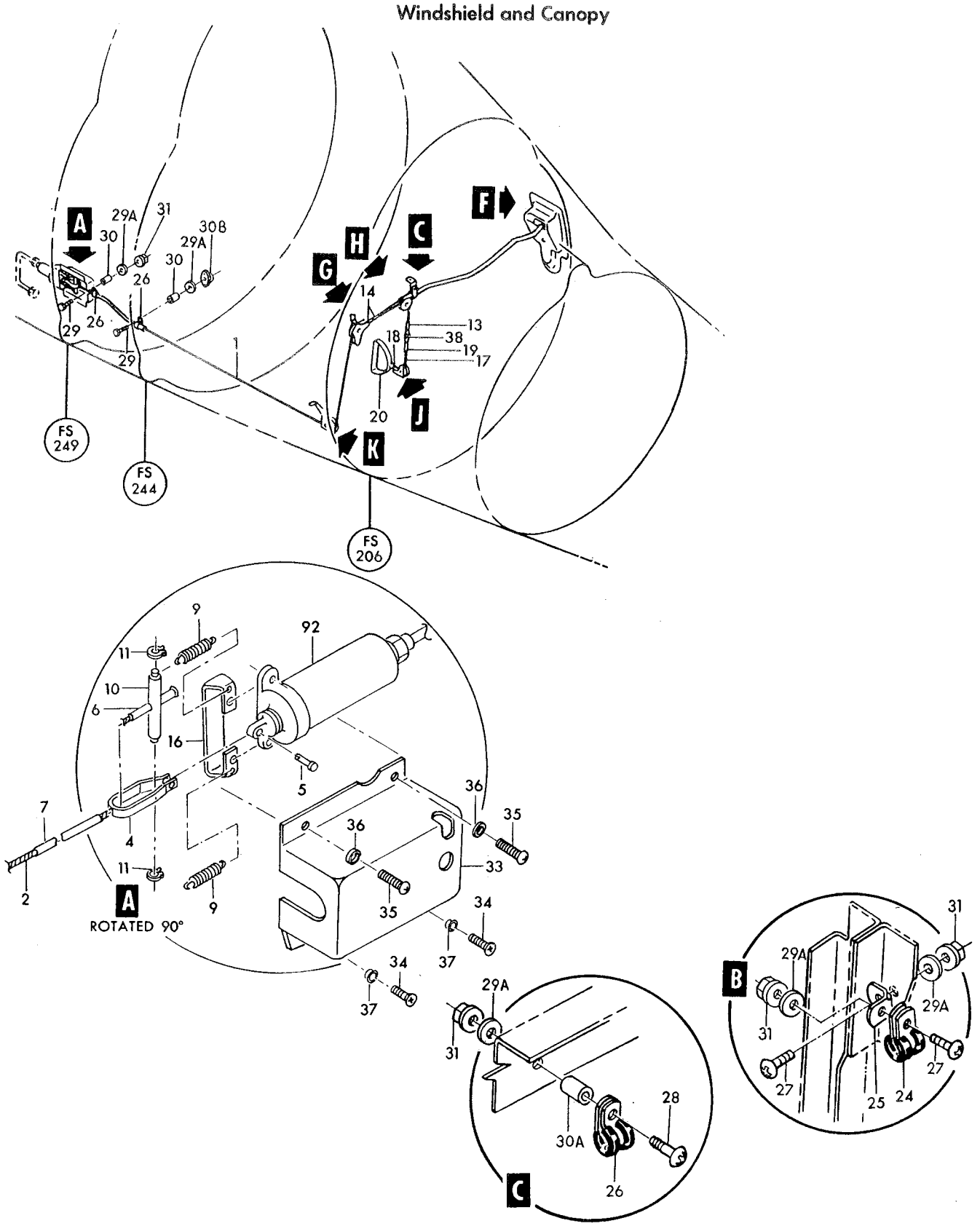

Figure 211—Canopy Emergency Jettison Handles and Cables (Sheet 1 of 2)

Windshield and Canopy

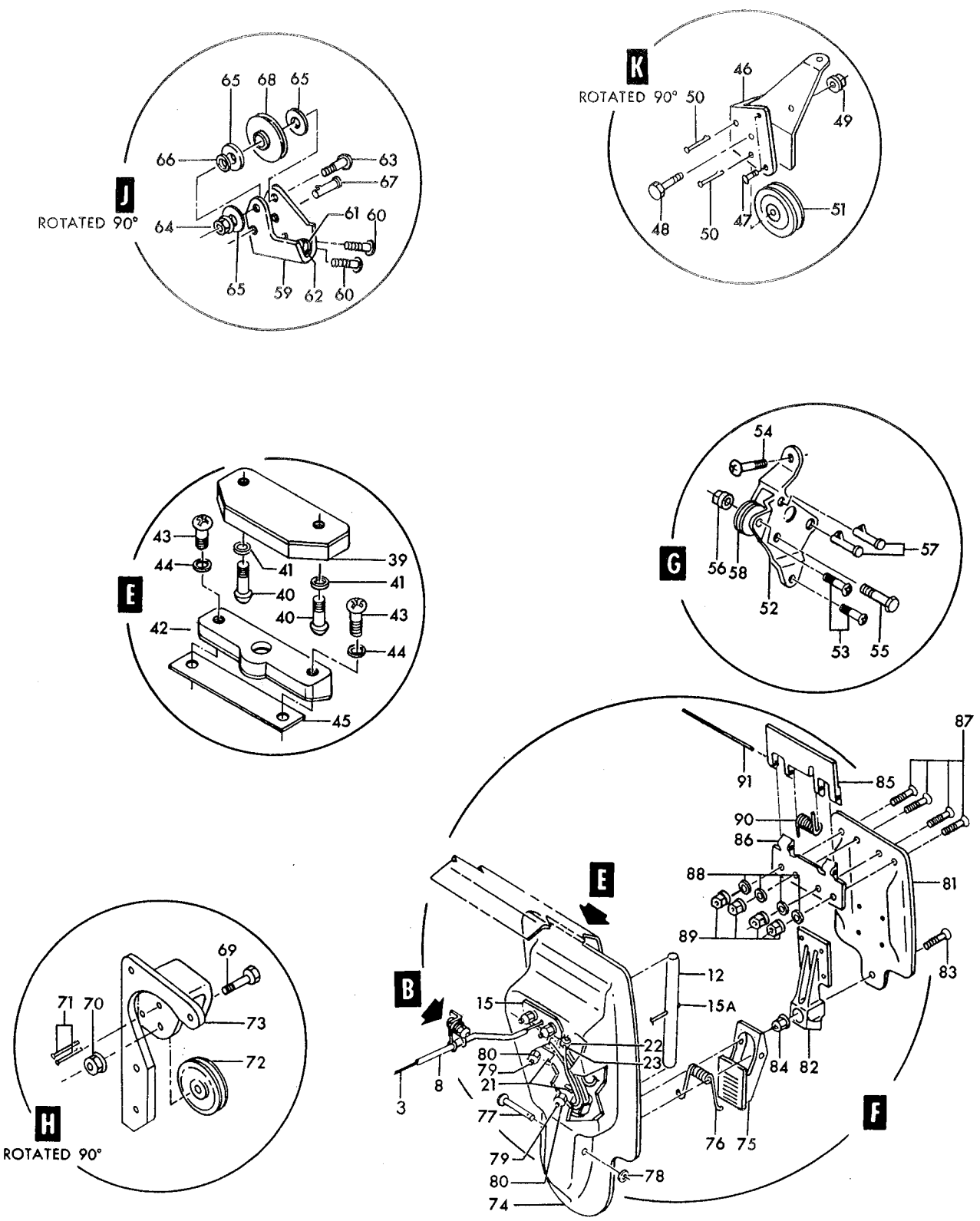

Figure 211 — Canopy Emergency Jettison Handles and Cables (Sheet 2 of 2)

Figura e particolare	NDR	DENOMINAZIONE (1 2 3 4 5 6 7)	Quant.	Codice applicab.
211		Attaching Parts		
-43	AN515-8R16	SCREW (88044)	2	
-44	AN960D8	WASHER (88044)	2	
-45	782086-1	SHIM, canopy jettison system	AR	
		——— ✲ ———		
-46	761102	BRACKET, canopy jettison pulley	1	
		Attaching Parts		
-47	NAS517-3-3	SCREW (80205)	2	
	AN960D10	WASHER (88044)	2	
	MS21042L3	NUT (96906)	2	
		——— ✲ ———		
-48	NAS1104-12	BOLT (80205)	1	
-49	MS21042L4	NUT (96906)	1	
-50	NAS427K13	PIN (80205)	2	
-51	MS20219A2	PULLEY (96906)	1	
-52	775800-1	BRACKET, emergency escape pulley	1	
		Attaching Parts		
-53	NAS623-3-5	SCREW (80205)	2	
-54	NAS623-3-6	SCREW (80205)	1	
	AN960D10	WASHER (88044)	3	
	MS21042L3	NUT (96906)	3	
		——— ✲ ———		
-55	NAS1104-14	BOLT (80205)	1	
-56	MS21042L4	NUT (96906)	1	
-57	NAS427K13	PIN (80205)	2	
-58	MS20219A1	PULLEY (96906)	1	
-59	762013	BRACKET ASSY, emergency escape bottom pulley	1	
		Attaching Parts		
-60	AN520-10R8	SCREW (88044)	2	
-61	AN960-10L	WASHER (88044)	1	
-62	MS21042L3	NUT (96906)	1	
		——— ✲ ———		
-63	AN23-15A	BOLT (88044)	1	
-64	MS21042L3	NUT (96906)	1	
-65	AN960-10	WASHER (88044)	3	
-66	AN960-10L	WASHER (88044)	1	
-67	NAS427K11	PIN (80205)	1	
-68	M1B	PULLEY (83451)	1	
-69	NAS1104-14	BOLT (80205)	1	
-70	MS21042L4	NUT (96906)	1	
-71	NAS427K14	PIN (80205)	2	
-72	MS20219A1	PULLEY (96906)	1	
-73	775577-1	BRACKET, emergency escape center pulley *(see fig. 221 for reqd)*	REF	
	783029-1	HOUSING INSTL, canopy external jettison handle *(see fig. 36 for reqd)*	REF	
	780798-1	HOUSING ASSY, canopy external jettison	1	
-74	780800-3	HOUSING ASSY, canopy external jettison handle	1	
-75	762371	DETENT, canopy external handle	1	
-76	762817	SPRING, external handle detent	1	
-77	MS20392-1C43	PIN (96906)	1	
-78	AN960D6	WASHER (88044)	1	
-79	AN227-10	STUD (88044)	2	6701-6790
	MS27980-17B	STUD (96906)	2	6791-
-80	MS21043L3	NUT (96906)	2	
	780798-3	DOOR ASSY, canopy external jettison complete	1	
-81	780798-7	DOOR ASSY, canopy external jettison	1	
-82	780799-1	STRIKER, external canopy jettison	1	
		Attaching Parts		
-83	NAS517-3-2	SCREW (80205)	1	
-84	MS21042L3	NUT (96906)	1	
		——— ✲ ———		

Figura e particolare	NDR	1 2 3 4 5 6 7 DENOMINAZIONE	Quant.	Codice applicab.
211-85	780803-1	HINGE, canopy external jettison (upper)	1	
-86	780804-1	HINGE, canopy external jettison (lower)	1	
		Attaching Parts		
-87	NAS517-3-2	SCREW (80205)	4	
-88	AN960D10	WASHER (88044)	4	
-89	MS21042L3	NUT (96906)	4	
-90	728160-1	SPRING, canopy jettison hinge	1	
-91	780798-17	PIN, hinge	1	
-92	M27	INITIATOR (Type M27) (aerno 93-0319) (alternate to 10520550) (see T.O. 11P3-3-4-3) *(see fig. 210 for reqd)*	REF	
	10520550	INITIATOR (alternate to M27) (type M27) (see T.O. 11P3-3-4-3) *(see fig. 210 for reqd)*	REF	

A - Removed per CA11F-104G-149
B - Reqd per CA11F-104G-149

Figura e particolare	NDR	1	2	3	4	5	6	7	DENOMINAZIONE	Quant.	Codice applicab.
									EJECTION SEAT AND RAILS		
212	FL0242-000			.					SERVICE KIT SEAT INSTL, upward ejection (A0019) (NHA 849070-101) *(see fig. 213)*	1	
- 1	MBEU1580GQ5ISSUE8			.	.				SEAT ASSY, upward ejection type MK.IQ7A (U1604) (see AA13-IQ7A-4)	1	
	MBEU1597GQ5			.	.				RAIL, ejection seat (U1604) (see AA13-IQ7A-4)	1	
	MBEU1033GQ5			.	.	.			FLAP, canopy arch retaining (U1604) (see AA13-IQ7A-4) *(see fig. 47)*	1	
	AS1242-9E			.	.	.			SCREW (U1604) *(see fig. 203)*	4	
	SP13E			.	.	.			WASHER (U1604) *(see fig. 203)*	4	
	AGS2001E1			.	.	.			STIFFNUT (U1604) *(see fig. 203)*	4	
	MBEU3325			.	.	.			PIN, rocket (U1604) *(see fig. 212)* (see AA13-IQ7A-4)	1	
- 5	MBEU1585GQ5			.	.				PORTION ASSY FOR PERSONNEL EQUIPMENT CONNECTOR, aircraft (U1604) (see AA13-IQ7A-4)	1	
- 6	MBEU1387GQ5			.	.				LOW ALTITUDE OXYGEN SYSTEM (U1604) (see AA13-IQ7A-4)	1	
	792791-103			.					RAIL INSTL, ejection seat (NHA 849141-101)	1	
- 7	FL0257-000			.	.				RAIL ASSY, ejection seat (A0019)	1	
- 8	MBEU870GQ5			.	.	.			TOP MOUNTING FOR GUN (U1604) (see AA13-IQ7A-4)	1	
- 9	MBEU628GQ5			.	.	.			BOLT FOR TOP GUN MOUNTING (U1604) (see AA13-IQ7A-4)	1	
- 9A	AN960-616		A.	.	.	.			WASHER (88044)	AR	
	AN960-616L		A.	.	.	.			WASHER (88044)	AR	
-10	H14-6			.	.	.			NUT (75237)	1	
-11	A102-8J			.	.	.			BOLT (U1604)	2	
-12	A102-9J			.	.	.			BOLT (U1604)	2	
-13	SP122J			.	.	.			WASHER (U1604)	12	
-14	A125J			.	.	.			STIFFNUT (U1604)	12	
-15	MBEU1493GQ5			.	.	.			TRIP ROD ATTMT BRACKET (U1604) (see AA13-IQ7A-4)	2	
-16	A102-15D			.	.	.			BOLT (U1604)	4	
-17	SP122D			.	.	.			WASHER (U1604)	6	
-18	A125D			.	.	.			STIFFNUT (U1604)	6	
-19	MBEU1496GQ5			.	.	.			TRIP BRACKET (U1604) (see AA13-IQ7A-4)	1	
-20	A102-4D			.	.	.			BOLT (U1604)	2	
-21	MBEU965GQ5			.		.			FITTING LOWER (U1604) (see AA13-IQ7A-4)	2	
-22	A102-15J			.	.	.			BOLT (U1604)	6	
-23	A102-16J			.	.	.			BOLT (U1604)	2	
-24	MBEU820GQ5			.	.	.			MOUNTING ASSY, bottom (U1604) (see AA13-IQ7A-4)	1	
-25	MBEU1677GQ5			.	.	.			BOLT (U1604) (see AA13-IQ7A-4)	1	
-26	SP122L			.	.	.			WASHER (U1604)	1	
-27	A125L			.	.	.			STIFFNUT (U1604)	1	
-28	MBEU1054GQ5			.	.	.			CROSS SHAFT ASSY, lines and cable anchorage (U1604) (see (AA13-IQ7A-4)	1	
-29	PH190-5			.	.	.			JO-BOLT (09875)	4	
-30	PH190-4			.	.	.			JO-BOLT (09875)	12	
-31	MBEU1434			.	.	.			PIN ASSY (U1604) (see AA13-IQ7A-4)	2	
-32	FL0303-101			.	.	.			BRACKET (A0019)	1	
-33	FL0249-101			.	.	.			RETAINER (A0019)	1	
-34	NAS1203-5			.	.	.			SCREW (80205)	2	
-35	AN960D10			.	.	.			WASHER (88044)	2	
-36	MS21042L3			.	.	.			NUT (96906)	2	
									Attaching Parts		
-37	NAS1204-10			.	.				SCREW (80205)	8	
-38	NAS1204-12			.	.				SCREW (80205)	2	
-39	NAS1155-10			.	.				SCREW (80205)	2	
-40	NAS1155-12			.	.				SCREW (80205)	6	
	AN960-416			.	.				WASHER (88044)	10	
	AN960-516			.	.				WASHER (88044)	10	
	MS21042L4			.	.				NUT (96906)	10	
	MS21042L5			.	.				NUT (96906)	10	
-42	780725-1			.	.	.			SHIM, seat actuator support bracket	AR	
-43	FL0306-101			.	.	.			RAIL, ejection seat *(see fig. 208)* (A0019)	1	

Ejection Seat and Survival Equipment

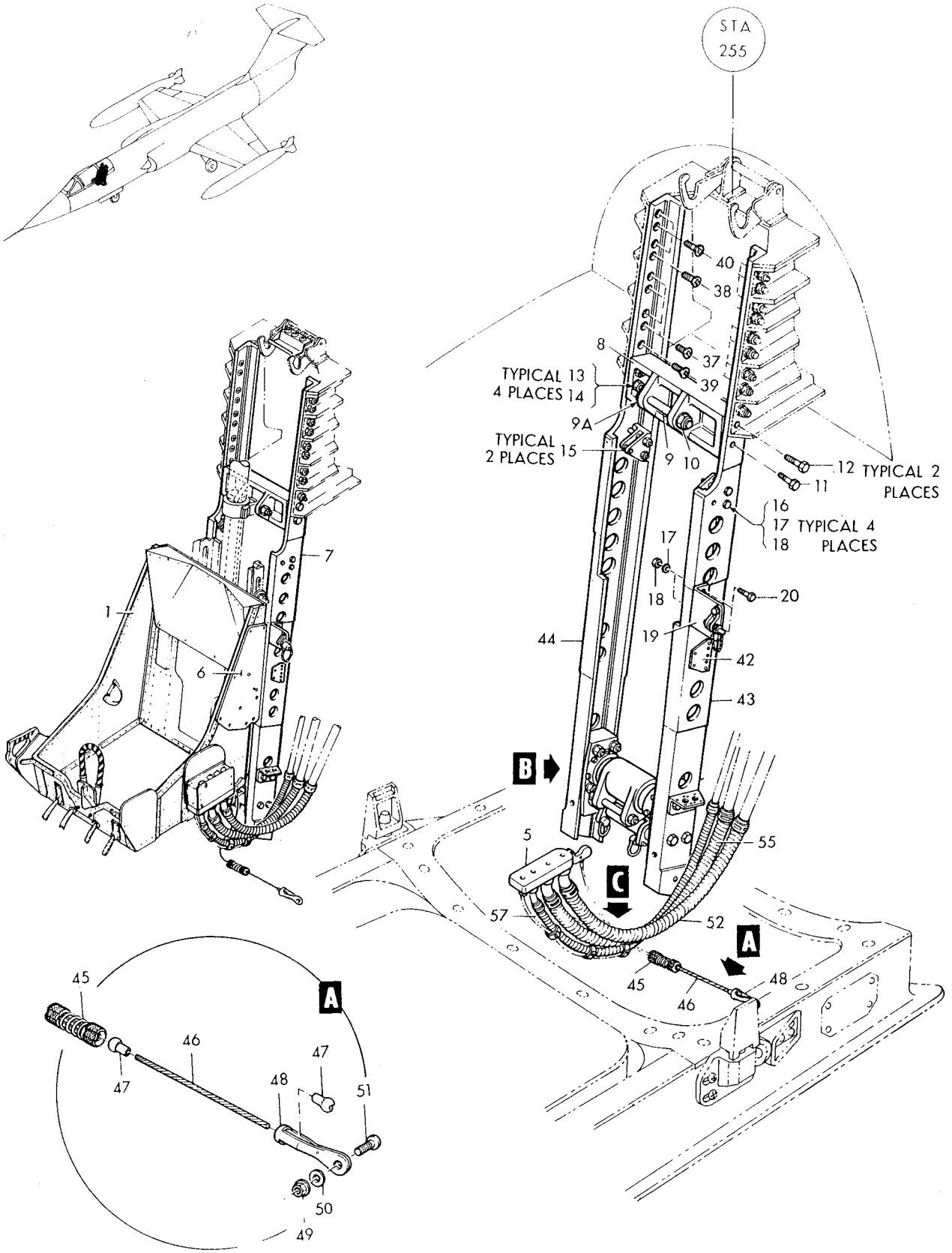

Figure 212-Ejection Seat and Rails (Sheet 1 of 2)

Ejection Seat and Survival Equipment

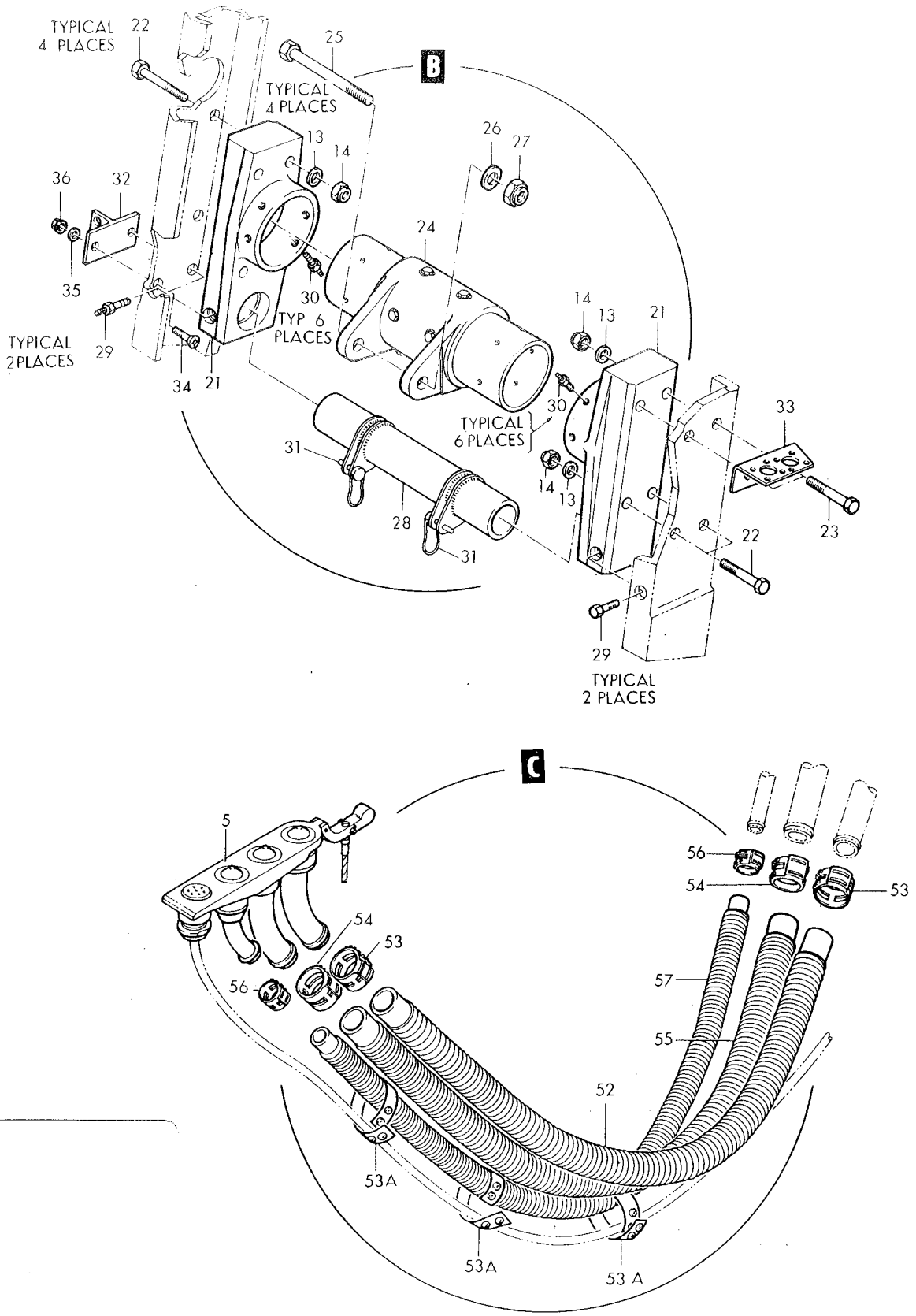

Figure 212-Ejection Seat and Rails (Sheet 2 of 2)

Figura e particolare	NDR	DENOMINAZIONE	Quant.	Codice applicab.
		1 2 3 4 5 6 7		
212-44	FL0306-102	RAIL, ejection seat *(see fig. 208)* (A0019)	1	
	792711-501	PERSONAL LEADS INSTL, cockpit (ship to seat) (NHA 849071-101)	1	
-45	RA2258-4	TERMINAL, quick disconnect (80097)	1	
	782891-3	CABLE ASSY, lanyard	1	
-46	782891-7	CABLE, lanyard	1	
-47	MS20664C4	TERMINAL, ball (96906)	2	
-48	RA2500-4	TERMINAL, strap (80097)	1	
-49	MS21042L3	NUT (96906)	1	
-50	AN960-10L	WASHER (88044)	1	
-51	NAS623-3-6	SCREW (80205)	1	
-52	MS22055H18	TUBE ASSY, oxygen mask to regulator (96906)	1	
-53	NAS397-18	CLAMP (80205)	2	
-53A	FL0053-1	CLAMP ASSY (A0019)	3	
-54	NAS397-18	CLAMP (80205)	2	
-55	MS22055H18	TUBE ASSY, ventilated flying suit (96906)	1	
-56	NAS397-14	CLAMP (80205)	2	
-57	39-0803	HOSE, anti-g (A0355)	1	

A - Reqd per AA.1F-104-OT-680

Figura e particolare	NDR	1 2 3 4 5 6 7 DENOMINAZIONE	Quant.	Codice applicab.
		EJECTION SEAT PYROTECHNICS AND SURVIVAL KIT		
213	850243-101	. PYROTECHNICS INSTL, upward ejection seat (NHA 849070-101)	1	
- 1	AN815-4	. . UNION (88044)	1	
- 2	MS21042L3	. . NUT (96906)	1	
- 3	AN960-10	. . WASHER (88044)	1	
- 4	NAS623-3-3	. . SCREW (80205)	1	
- 5	M27	. . INITIATOR (Type M 27) cartridge actuated (aerno 93-0319) (alternate to 10520550) (see T.O. 11P3-3-4-3)	1	
	10520550	. . INITIATOR, cartridge actuated (type M27) (aerno 93-0319) (alternate to M27) (see T.O. 11P3-3-4-3)	REF	
- 6	MBEU1055GQ5	. . RAIL, guide (U1604) (see AA13-IQ7A-4)	1	
- 7	MBEU26434	. . CARTRIDGE, primary (U1604) (see AA13-IQ7A-4)	1	
- 8	MBEU29231	. . CARTRIDGE, auxiliary (U1604) (see AA13-IQ7A-4)	2	
- 9	MBEU3325	. . PIN ROCKET ASSY (U1604) *(see fig. 212 for reqd)* (see AA13-IQ7A-4)	REF	
-10	MBEU2358RU	. . PACK ROCKET (U1604) (see AA13-IQ7A-4)	1	
-11	MBEU2250RU	. . CARTRIDGE ROCKET (U1604) (see AA13-IQ7A-4)	1	
-12	MBEU1104RU	. . PROPELLANT (U1604) (see AA13-IQ7A-4)	9	
-13	MBEU1071RU	. . PROPELLANT (U1604) (see AA13-IQ7A-4)	1	
-14	MBEU920RU	. . PROPELLANT (U1604) (see AA13-IQ7A-4)	5	
-15	MBEU7536	. . DROGUE, cartridge (U1604) (see AA13-IQ7A-4)	1	
-16	MBEU1025F5	. . CARTRIDGE, power retraction initiator (U1604) (see AA13-IQ7A-4)	1	
-17	MBEU16650	. . GUILLOTINE, cartridge (U1604) (see AA13-IQ7A-4)	1	
-17A	FL0333-100	A. . STREAMER (A0019)	1	
-17B	FL0333-200	A. . STREAMER (A0019)	1	
-17C	MBEU1595GQ5	A. . PIN SAFETY (U1604)	1	
-18	FL0242-000	. SERVICE KIT SEAT INSTL, upward ejection *(see fig. 212 for reqd)* (A0019)	REF	
-19	MBEU1583GQ5	. . PORTION ASSY FOR PERSONNEL EQUIPMENT CONNECTOR, oxigen mask (U1604) (see AA13-IQ7A-4)	1	
-20	MBEU5029PA	. . TRAINER ASSY, parachute and harness (U1604) (see AA13-IQ7A-4)	1	
-21	MBEU2711DP	. . SURVIVAL PACK (U1604) (see AA13-IQ7A-4)	1	

A - Reqd per AA13-IQ7A-OT-103C

Ejection Seat and Survival Equipment

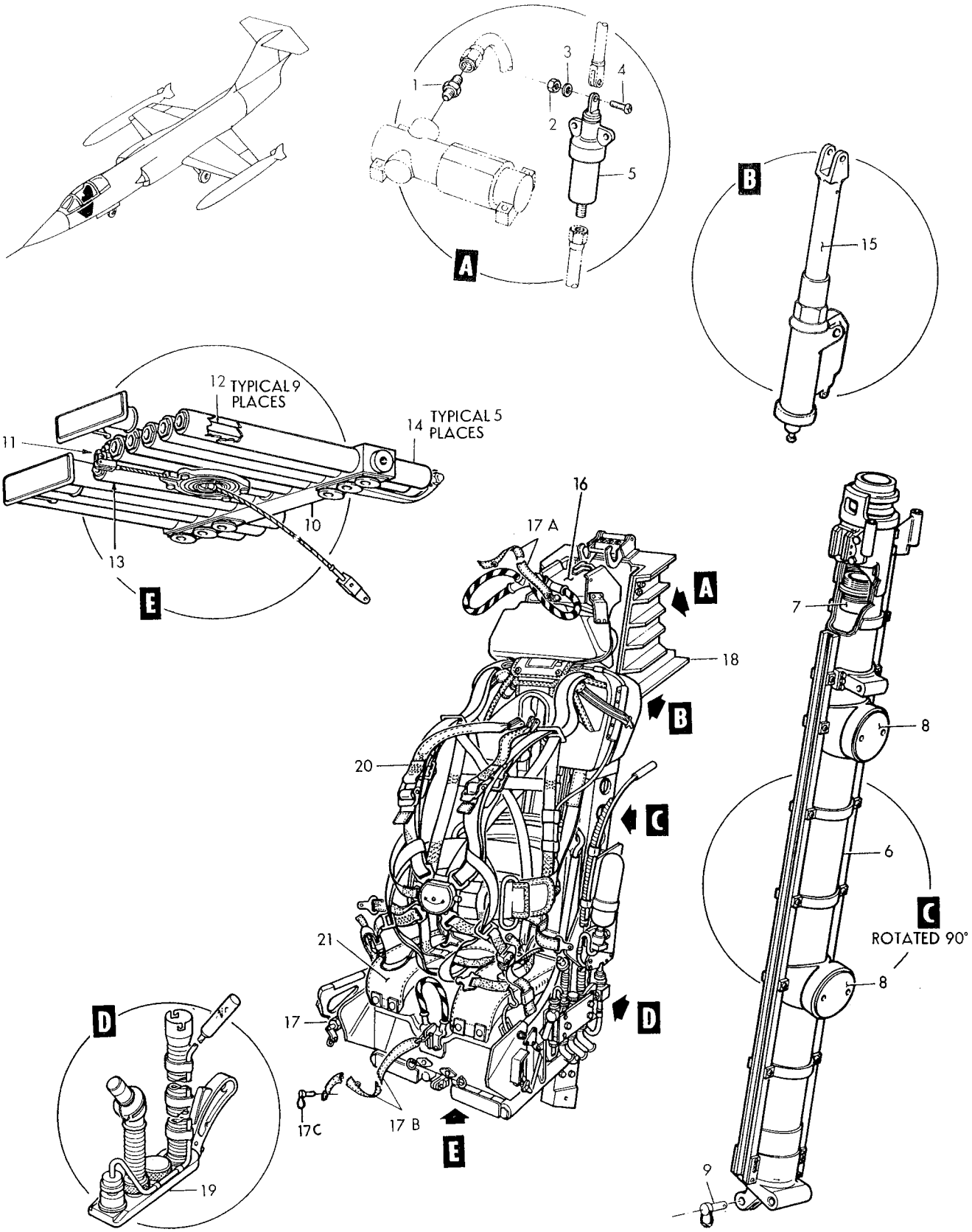

Figure 213–Ejection Seat Pyrotechnics and Survival Kit

Figura e particolare	NDR	1 2 3 4 5 6 7 DENOMINAZIONE	Quant.	Codice applicab.
		COCKPIT FURNISHINGS AND EQUIPMENT		
214	783986-103	TRANSDUCER INSTL, LH angle of attack (NHA 849071-101)	1	
- 1	15978-11	TRANSDUCER, (MT6) type TA107 vane relative wind (A0019) (98571) (Lockheed spec dwg 620590-103) (see T.O. 5F12-2-4-4)	1	
		Attaching Parts		
- 5	NAS517-3-8	SCREW (80205)	6	
		☼		
	783986-3	DOUBLER INSTL, LH angle of attack transducer *(see fig. 30 for reqd)*	REF	
	783986-5	DOUBLER, angle of attack transducer	1	
	770161-7	DOUBLER, angle of attack transducer	2	
	783986-7	DOUBLER, angle of attack transducer	1	
	783987-1	SPACER, angle of attack transducer	1	
- 6	2150	FITTING, ball-lok (84256)	2	
	761176-3	SCOOP INSTL, fus sta 219 to 225 RH pilot fresh air *(see fig. 30 for reqd)*	REF	
	778000-1	HARNESS ASSY, fresh air scoop switch	1	
- 7	121045	SCOOP, (S5) cabin air (79318) (Lockheed spec dwg 644571-9) (see T.O. 15A2-2-52-13)	1	
		Attaching Parts		
- 8	AN507-1032R8	SCREW (88044)	14	
- 9	AN960-10L	WASHER (88044)	14	
-10	MS21042L3	NUT (96906)	14	
		☼		
-11	DM9700-7P004	CONNECTOR, (P74) plug (P-82 fresh air switch disconnect) (17419)	1	
	849694-101	HARNESS ASSY, heat and temperature control panel *(see fig. 160 for reqd)*	REF	
-12	DM9606-7S004	CONNECTOR, (J26) receptacle (P-82 fresh air scoop disconnect) (17419)	1	
	849742-101	HARNESS ASSY, cockpit area automatic pitch control and damper *(see fig. 159 for reqd)*	REF	
-13	MS3116P14-15S	CONNECTOR, (P55) plug (stick shaker transducer) (96906)	1	

Cockpit Section Equipment

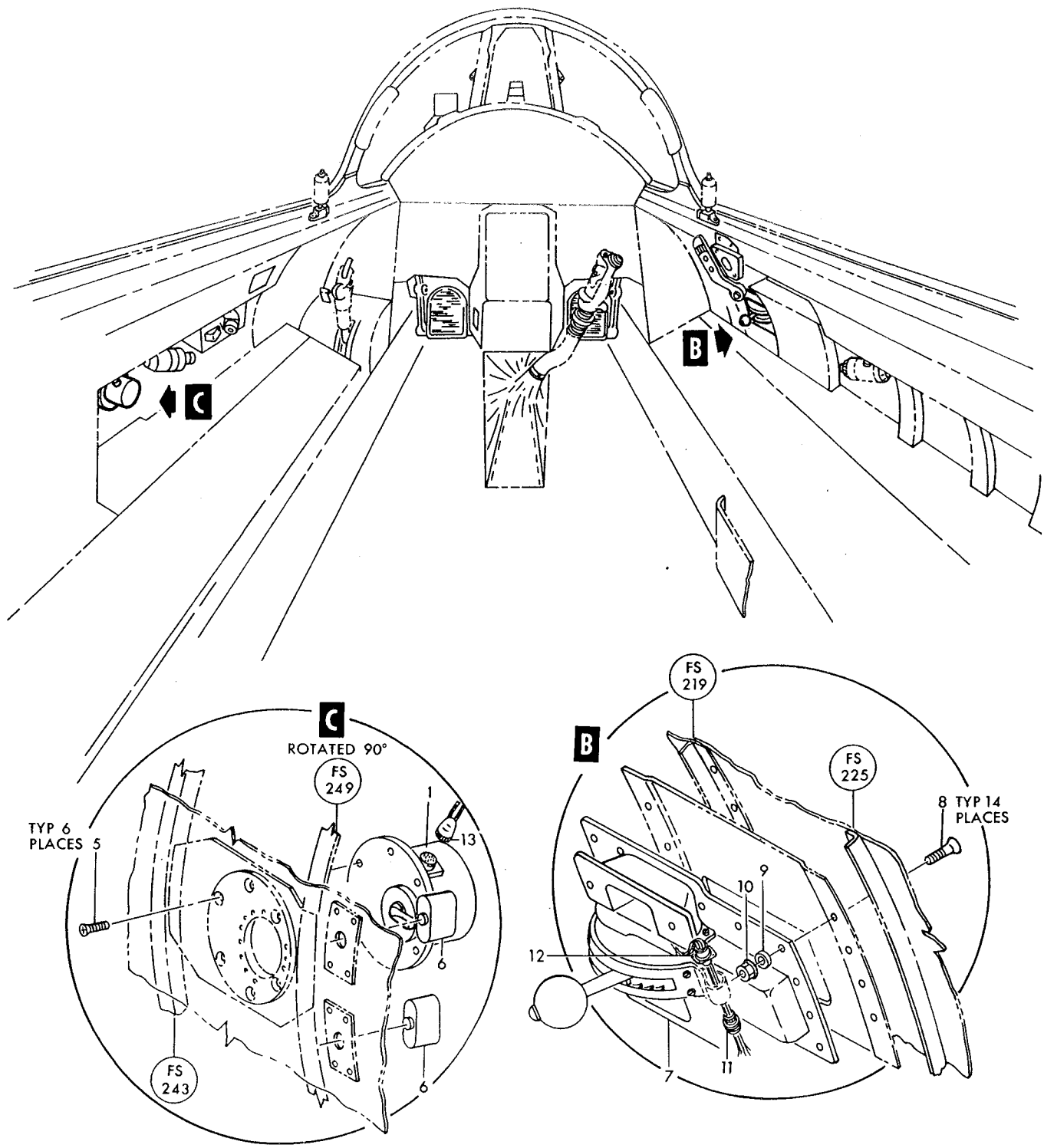

Figure 214— Cockpit Furnishings and Equipment

Figura e particolare	NDR	DENOMINAZIONE 1 2 3 4 5 6 7	Quant.	Codice applicab.
		COCKPIT TRIM PANELS AND INSULATING BLANKETS LEFT HAND		
215	850527-101	PANEL INSTL, cockpit LH TRIM *(see fig. 30 for reqd)*	REF	
- 1	784970-101	PANEL ASSY, forward LH lower trim	1	
		Attaching Parts		
	NAS514P832-10	SCREW (80205)	15	
	NAS391-8P	WASHER (80205)	13	
		✲		
- 2	777048-1	DECAL, LH side rudder pedal adjustment marking	1	
- 3	FL0242-112	PANEL ASSY, lower aft LH trim (A0019)	1	
		Attaching Parts		
	NAS514P832-10	SCREW (80205)	7	
	NAS391-8P	WASHER (80205)	7	
		✲		
	781193-35	PANEL ASSY, lower aft LH trim	1	
	FL0305-105	PANEL, lower aft LH trim (A0019)	1	
- 4	781706-1	STRAP ASSY, panel	2	
- 5	781193-37	BLANKET, insulation	1	
- 6	781193-17	BLANKET, insulation	1	
- 7	781193-27	BLANKET, insulation	1	
- 8	FL0305-103	BLANKET, insulation (A0019)	1	
- 9	781193-31	BLANKET, insulation	1	
-10	781000-1	PANEL ASSY, upper aft LH trim	1	
		Attaching Parts		
	NAS514P832-10	SCREW (80205)	4	
	NAS391-8P	WASHER (80205)	4	
		✲		
-11	793574-1	PANEL ASSY, anti-G valve trim	1	6701-6840
	793574-101	PANEL ASSY, anti-G valve trim	1	6841-
		Attachign Parts		
	NAS514P832-10	SCREW (80205)	5	
	NAS391-8P	WASHER (80205)	5	
		✲		
-12	780999-501	PANEL ASSY, fus sta 243 to 249 lower trim	1	
		Attaching Parts		
	NAS514P832-10	SCREW (80205)	2	
	NAS391-8P	WASHER (80205)	2	
		✲		
-13	770384-1	PLATE, upper trim panel	1	
		Attaching Parts		
	NAS514P832-10	SCREW (80205)	4	
	NAS391-8P	WASHER (80205)	4	
		✲		
	780999-11	PANEL, fus sta 243 to 249 lower trim	1	
-14	770478-1	CLIP ASSY, trim panel	2	
-15	799956-101	COVER, switch special stores	1	6701-6740
	799956-103	COVER, switch special stores	1	6741-
-16	781788-1107	PANEL ASSY, upper forward trim	1	6701-6815
	781788-111	PANEL ASSY, upper forward trim	1	6816-
-16A	852336-101	DECAL, LH console trim strip	1	6816-
		Attaching Parts		
	NAS514P832-10	SCREW (80205)	6	
	NAS514P1032-10	SCREW (80205)	1	
	NAS391-8P	WASHER (80205)	7	
		✲		
-20	785525-101	PANEL, upper forward trim	1	
-21	AN5800-1	HOLDER ASSY, card (88044)	1	
-26	851315-101	DECAL, arresting hook release switch wiring	1	
	784972-5	BRACKET INSTL, LH cockpit trim *(see fig. 36 for reqd)*	REF	
-27	763572-6	BRACKET, lower trim panel	9	
-28	772995-1	BRACKET ASSY, trim panel	1	

Cockpit Section Equipment

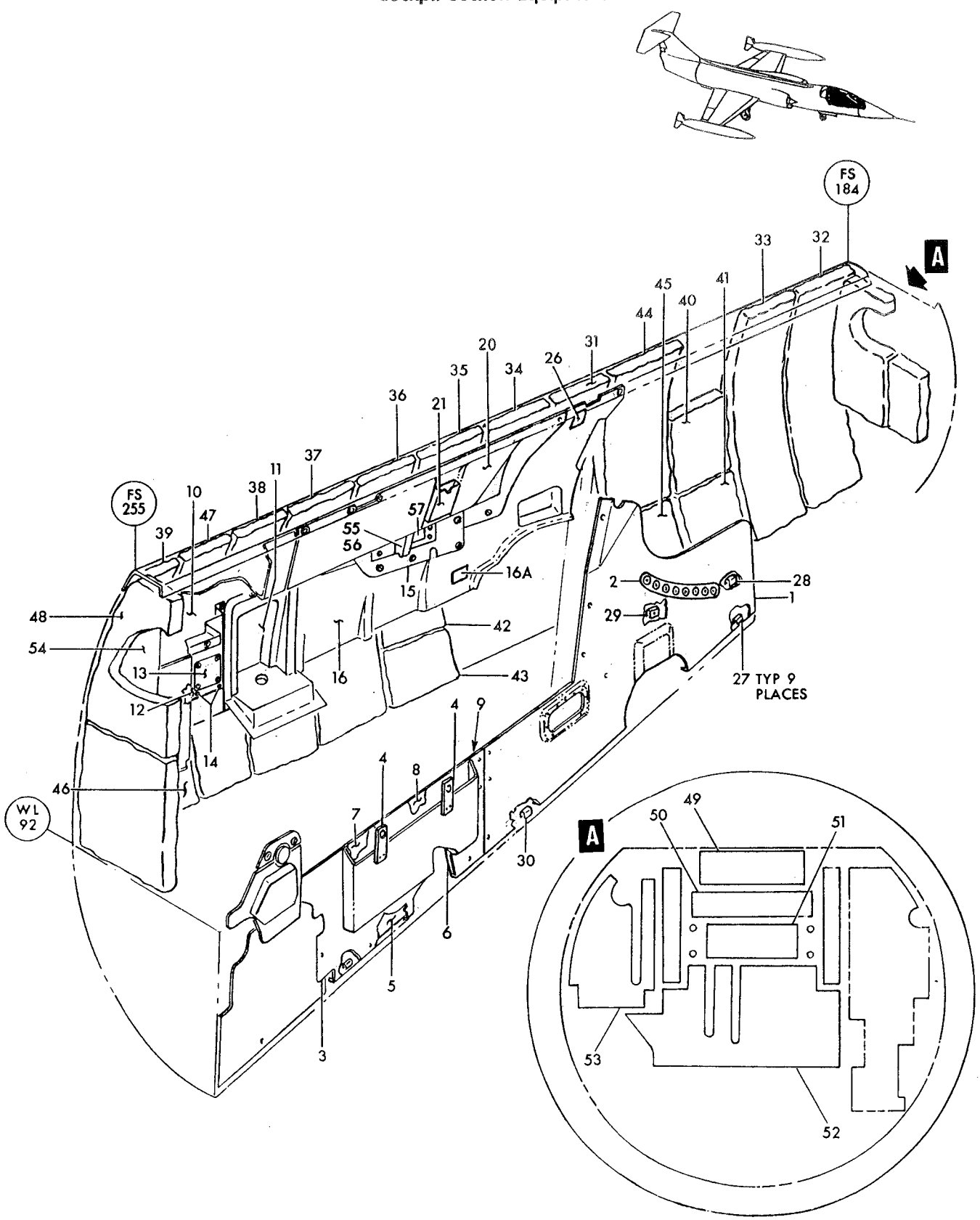

Figure 215— Cockpit Trim Panels and Insulating Blankets Left Hand

Figura e particolare	NDR	1	2	3	4	5	6	7	DENOMINAZIONE	Quant.	Codice applicab.
215-29	772996-1		.	.					BRACKET ASSY, trim panel	1	
-30	763572-10		.	.					BRACKET, lower trim panel	1	
	784972-103		.						PANEL INSTL, cockpit LH trim panel *(see fig. 30 for reqd)*	REF	
-31	784972-7		.	.					BLANKET, cockpit trim panel insulation	1	
-32	763828-9		.	.					BLANKET, cockpit trim panel insulation	1	
-33	763828-10		.	.					BLANKET, cockpit trim panel insulation	1	
-34	763828-14		.	.					BLANKET, cockpit trim panel insulation	1	
-35	784972-25		.	.					BLANKET, cockpit trim panel insulation	1	
-36	784972-27		.	.					BLANKET, cockpit trim panel insulation	1	
-37	784972-29		.	.					BLANKET, cockpit trim panel insulation	1	
-38	763828-18		.	.					BLANKET, cockpit trim panel insulation	1	
-39	784972-33		.	.					BLANKET, cockpit trim panel insulation	1	
-40	763828-22		.	.					BLANKET, cockpit trim panel insulation	1	
-41	763828-23		.	.					BLANKET, cockpit trim panel insulation	1	
-42	763828-24		.	.					BLANKET, cockpit trim panel insulation	1	
-43	763828-25		.	.					BLANKET, cockpit trim panel insulation	1	
-44	763828-31		.	.					BLANKET, cockpit trim panel insulation	1	
-45	784972-23		.	.					BLANKET, cockpit trim panel insulation	1	
-46	763828-35		.	.					BLANKET, cockpit trim panel insulation	1	
-47	784972-31		.	.					BLANKET, cockpit trim panel insulation	1	
-48	784972-9		.	.					BLANKET, cockpit trim panel insulation	1	
-49	784972-11		.	.					BLANKET, cockpit trim panel insulation	1	
-50	784972-13		.	.					BLANKET, cockpit trim panel insulation	1	
-51	784972-15		.	.					BLANKET, cockpit trim panel insulation	1	
-52	784972-17		.	.					BLANKET, cockpit trim panel insulation	1	
-53	784972-105		.	.					BLANKET, cockpit trim panel insulation	1	
	784972-21		.	.					BLANKET, cockpit trim panel insulation (RH side) *(see fig. 216)*	1	
	784972-35		.						NAMEPLATE INSTL, LH cockpit trim panel (NHA 849071-101)	1	6766-
-54	LS2477-1		.	.					NAMEPLATE, identification (36659)	1	6766-
	851830-101	A.							SWITCH INSTL, eng. RPM lockup override *(see fig. 30 for reqd)*	REF	6741-
-55	MS24523-23	A.	.						SWITCH, (S25) eng. RPM lockup override (96906)	1	6741-
-56	11100	A.	.						GUARD (72914)	1	6741-
-57	851831-101	A.	.						DECAL, eng RPM lockup override switch	1	6741-

A - Reqd per AA.1F-104S-OT-138

Figura e particolare	NDR	DENOMINAZIONE	Quant.	Codice applicab.
		COCKPIT TRIM PANELS AND INSULATING BLANKETS RIGHT HAND		
216	850537-101	PANEL INSTL, RH cockpit trim *(see fig. 30 for reqd)*	REF	
- 1	FL0242-104	PANEL ASSY, lower fwd RH trim (A0019)	1	
		Attaching Parts		
- 2	NAS514P832-10	SCREW (80205)	16	
- 3	NAS391-8P	WASHER (80205)	16	
		*		
- 3A	785071-3	BLANKET, insulation	1	
	FL0242-105	COVER, insulation blanket (A0019)	1	
- 4	777049-1	DECAL, rudder pedal adj marking RH	1	
- 5	781460-501	PANEL ASSY, lower aft RH trim	1	
		Attaching Parts		
- 6	NAS514P832-10	SCREW (80205)	9	
- 7	NAS391-8P	WASHER (80205)	9	
		*		
- 8	781460-7	BLANKET, insulation	1	
- 9	781460-9	BLANKET, insulation	1	
-10	781460-11	BLANKET, insulation	1	
-11	781460-17	BLANKET, insulation	1	
-12	781460-21	BLANKET, insulation	1	
	781460-25	PANEL ASSY, lower aft RH trim	1	
-12A	781706-1	STRAP ASSY, trim panel	2	
	AN960D3	WASHER (88044)	4	
-13	785074-101	PANEL, upper fwd RH trim	1	
		Attaching Parts		
-14	NAS514P832-8	SCREW (80205)	4	
-15	NAS391-8P	WASHER (80205)	4	
		*		
-16	785073-501	PANEL ASSY, center RH trim	1	
		Attaching Parts		
-17	NAS514P832-10	SCREW (80205)	5	
-18	NAS391-8P	WASHER (80205)	5	
		*		
	785073-5	COVER, center RH trim	1	
-18A	789455-1	DECAL, pilot's fresh air scoop	1	
-19	764539	PLATE, trim	1	
		Attaching Parts		
-20	NAS514P1032-8	SCREW (80205)	4	
-21	NAS391-10P	WASHER (80205)	4	
		*		
-22	785526-101	PANEL, upper aft RH trim	1	
		Attaching Parts		
-23	NAS514P832-8	SCREW (80205)	5	
-23A	NAS514P832-10	SCREW (80205)	7	
-24	NAS391-8P	WASHER (80205)	12	
		*		
-25	785526-103	COVER, upper aft RH trim	1	
-26	851422-101	DECAL, alert align	1	
-28	781643-1	DECAL, canopy opening	1	
-29	785470-1	PLATE, thunderstorm light bracket	1	
-30	785471-1	BRACKET, flood and thunderstorm ckpt light	1	
-30A	784635-1	BRACKET, ASSY cockpit fwd floodlight support	1	
-30B	787429-1	PLATE, cockpit fwd floodlight	1	
-31	784560-1	COVER, switch	1	
		Attaching Parts		
-32	NAS514P832-8	SCREW (80205)	2	
-33	NAS391-8P	WASHER (80205)	2	
		*		
-34	785096-1	PANEL, center aft RH trim	1	

Cockpit Section Equipment

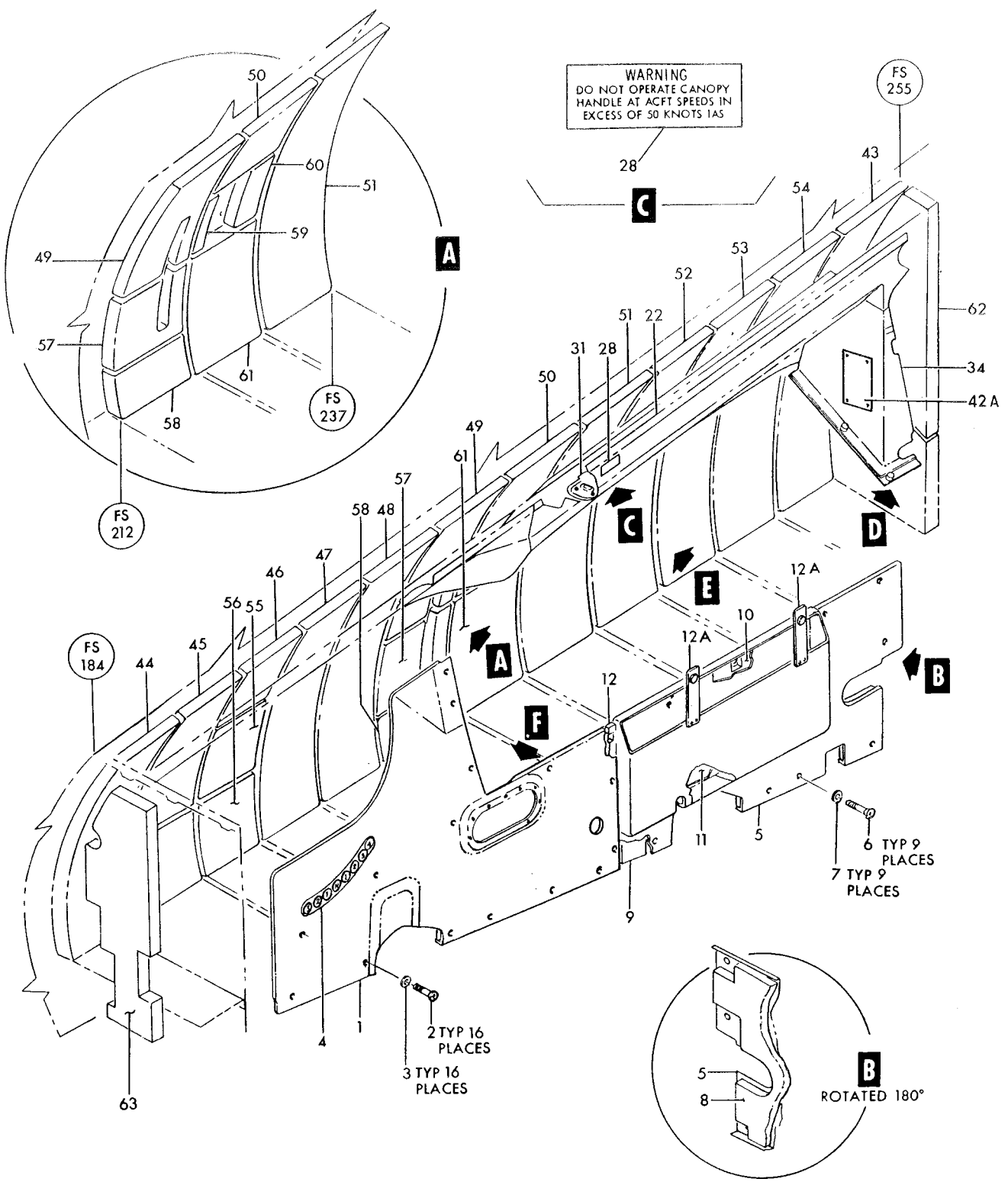

Figure 216— Cockpit Trim Panels and Insulating Blankets Right Hand (Sheet 1 of 2)

Cockpit Section Equipment

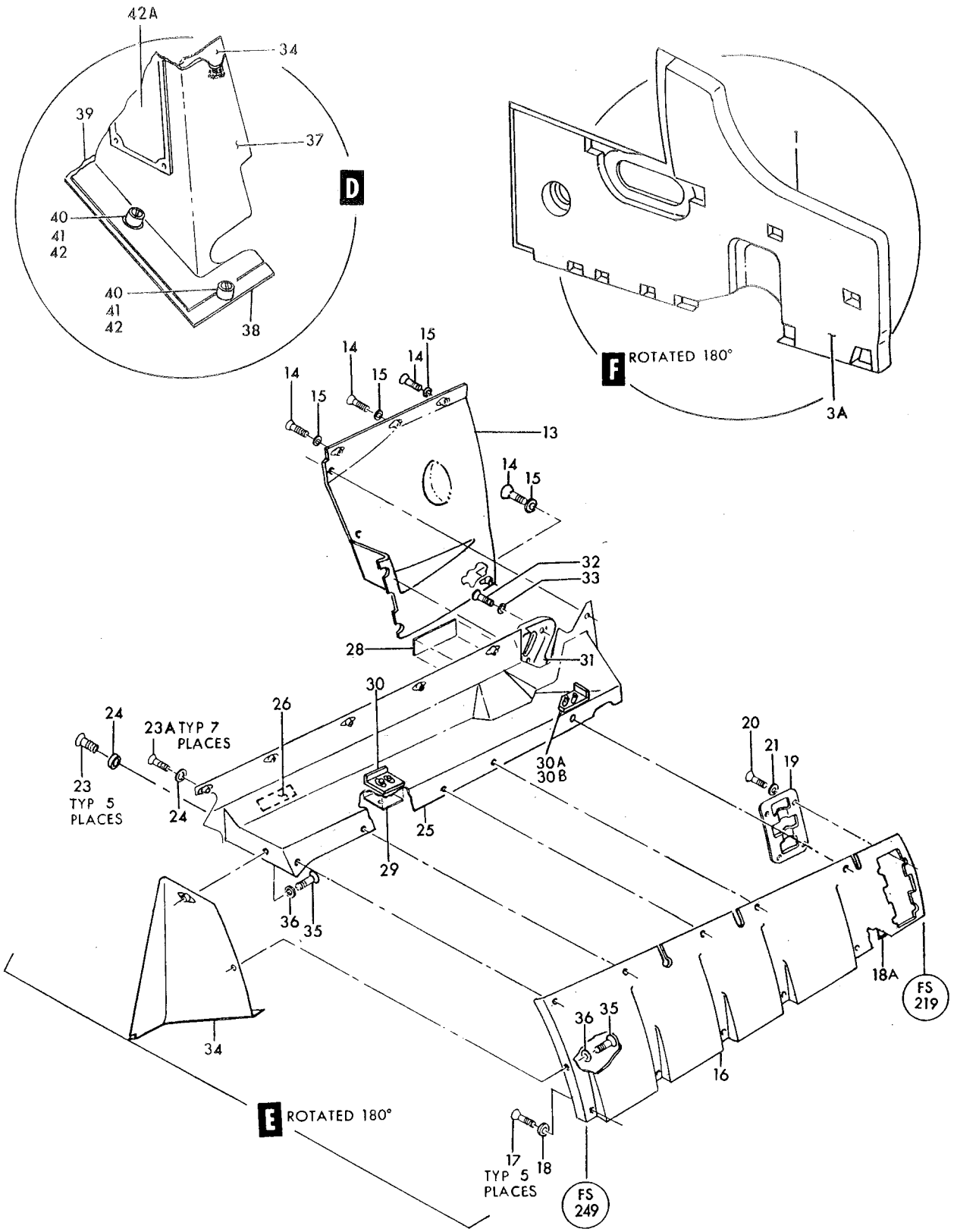

Figure 216— Cockpit Trim Panels and Insulating Blankets Right Hand (Sheet 2 of 2)

Figura e particolare	NDR	DENOMINAZIONE 1 2 3 4 5 6 7	Quant.	Codice applicab.
		Attaching Parts		
216-35	NAS514P832-10	SCREW (80205)	2	
-36	NAS391-8P	WASHER (80205)	2	
-37	785096-3	COVER, center trim panel	1	
-38	785096-5	SUPPORT ASSY, center aft RH trim	1	
-39	785096-7	PLATE, center trim support	1	
-40	PF3 1-2 38	STUD (72794)	2	
-41	PS3 1-2	SPRING (72794)	2	
-42	PC3 1-2	CUP (72794)	2	
-42A	LS2477-1	NAMEPLATE, identification (36659)	1	6766-
	785070-3	BRACKET INSTL, RH cockpit trim *(see fig. 37 for reqd)*	REF	
	785070-5	PANEL INSTL, RH cockpit trim *(see fig. 30 for reqd)*	REF	
-43	785070-7	BLANKET, RH cockpit trim insulation	1	
-44	761188-7	BLANKET, RH cockpit trim insulation	1	
-45	761188-8	BLANKET, RH cockpit trim insulation	1	
-46	761188-9	BLANKET, RH cockpit trim insulation	1	
-47	761188-10	BLANKET, RH cockpit trim insulation	1	
-48	761188-11	BLANKET, RH cockpit trim insulation	1	
-49	761188-12	BLANKET, RH cockpit trim insulation	1	
-50	785070-15	BLANKET, RH cockpit trim insulation	1	
-51	785070-17	BLANKET, RH cockpit trim insulation	1	
-52	785070-19	BLANKET, RH cockpit trim insulation	1	
-53	785070-21	BLANKET, RH cockpit trim insulation	1	
-54	785070-13	BLANKET, RH cockpit trim insulation	1	
-55	761188-21	BLANKET, RH cockpit trim insulation	1	
-56	761188-22	BLANKET, RH cockpit trim insulation	1	
-57	761188-23	BLANKET, RH cockpit trim insulation	1	
-58	761188-24	BLANKET, RH cockpit trim insulation	1	
-59	761188-25	BLANKET, RH cockpit trim insulation	1	
-60	761188-26	BLANKET, RH cockpit trim insulation	1	
-61	761188-27	BLANKET, RH cockpit trim insulation	1	
-62	785070-11	BLANKET, RH cockpit trim insulation	1	
-63	784972-21	BLANKET, insulation (RH side) *(see fig. 215 for reqd)*	REF	

Figura e particolare	NDR	1	2	3	4	5	6	7	DENOMINAZIONE	Quant.	Codice applicab.
									THROTTLE AND FLAP CONTROL HOUSING		
217	760260-103			.					HOUSING INSTL, throttle control *(see fig. 63 for reqd)*	REF	
									Attaching Parts		
- 1	NAS221-12			.	.				SCREW (80205)	4	
- 2	AN3-5A			.	.				BOLT (88044)	3	
- 3	AN4-6A			.	.				BOLT (88044)	2	
- 4	AN960D10			.	.				WASHER (88044)	7	
- 5	AN960D416			.	.				WASHER (88044)	2	
- 6	MS21042L3			.	.				NUT (96906)	3	
- 7	MS21042L4			.	.				NUT (96906)	2	
									*		
- 8	794419-105			.	.	.			HOUSING ASSY, throttle control *(see fig. 78 for reqd)*	REF	
- 9	776884-1			.	.	.			GUARD ASSY, flap control lever	1	
-10	726404-6			.	.	.			HINGE ASSY, flap lever guard	1	
-11	726404-5			.	.	.			PIN, flap lever guard	1	
-12	LS1010-180			.	.	.			SPRING, flap lever guard (36659)	1	
-13	726404-3			.	.	.			HALF HINGE, flap lever guard	1	
-14	726404-4			.	.	.			HALF HINGE, flap lever guard	1	
-15	776882-1			.	.				GUARD, flap lever	1	
									Attaching Parts		
-16	AN520-10R4			.	.				SCREW (88044)	2	
-17	AN936A10			.	.				WASHER (88044)	2	
-18	AN960-10L			.	.				WASHER (88044)	2	
									*		
-19	775646-1	A.		.	.				STOP ASSY, throttle lever	1	6701-6790
	775646-101	B.		.	.				STOP ASSY, throttle lever	1	
									Attaching Parts		
-20	NAS623-3-6			.	.				SCREW (80205)	1	
-21	NAS623-3-7			.	.				SCREW (80205)	1	
-22	AN520-10R8	A.		.	.				SCREW (88044)	1	6701-6790
	MS27039-1-08	B.		.	.				SCREW (96906)	1	
	LS1551-190-688			.	.				WASHER, serrated (under NAS 623-3-7 screw head) (36659)	1	
									*		
-23	726083-3			.	.				NAMEPLATE, throttle control idle	1	
-24	726083-4			.	.				NAMEPLATE, throttle control off	1	
-25	775644-1			.	.				GUIDE, throttle lever off	1	
									Attaching Parts		
-26	NAS623-3-7			.	.				SCREW (80205)	2	
	LS1551-190-688			.	.				WASHER, serrated (under screw head) (36659)	2	
									*		
-27	775645-1	A.		.	.				STOP, throttle lever	1	6701-6790
	775645-101	B.		.	.				STOP, throttle lever	1	
									Attaching Parts		
-28	NAS623-3-7			.	.				SCREW (80205)	1	
-29	NAS623-3-8			.	.				SCREW (80205)	1	
	LS1551-190-688			.	.				WASHER, serrated (under screw head and between body assy (36659)	4	
									*		
-30	775643-1	A.		.	.				STOP ASSY, throttle	1	6701-6790
	775643-101	B.		.	.				STOP ASSY, throttle	1	
									Attaching Parts		
-31	NAS623-3-4			.	.				SCREW (80205)	2	
	LS1551-190-688			.	.				WASHER, serrated (under screw head) (36659)	2	
									*		
-32	726083-6			.	.				NAMEPLATE, throttle control full	1	
-33	458419			.	.				BRACKET ASSY, afterburner throttle slide support	1	
									Attaching Parts		
-34	AN520-10R10			.	.				SCREW (88044)	2	
									*		
	760281-103			.	.				BODY ASSY, throttle detent afterburner	1	

Cockpit Section Equipment

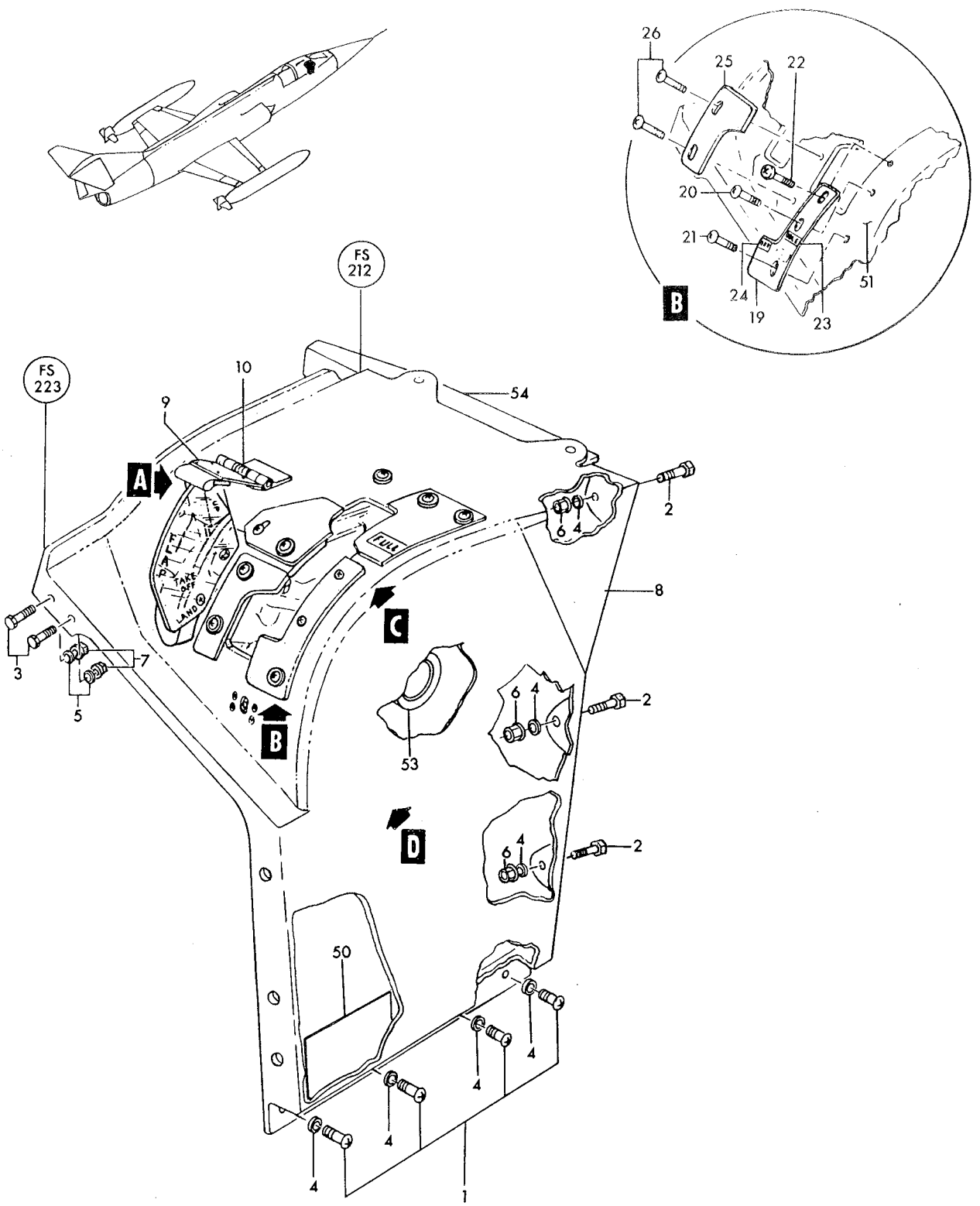

Figure 217— Throttle and Flap Control Housing (Sheet 1 of 2)

Cockpit Section Equipment

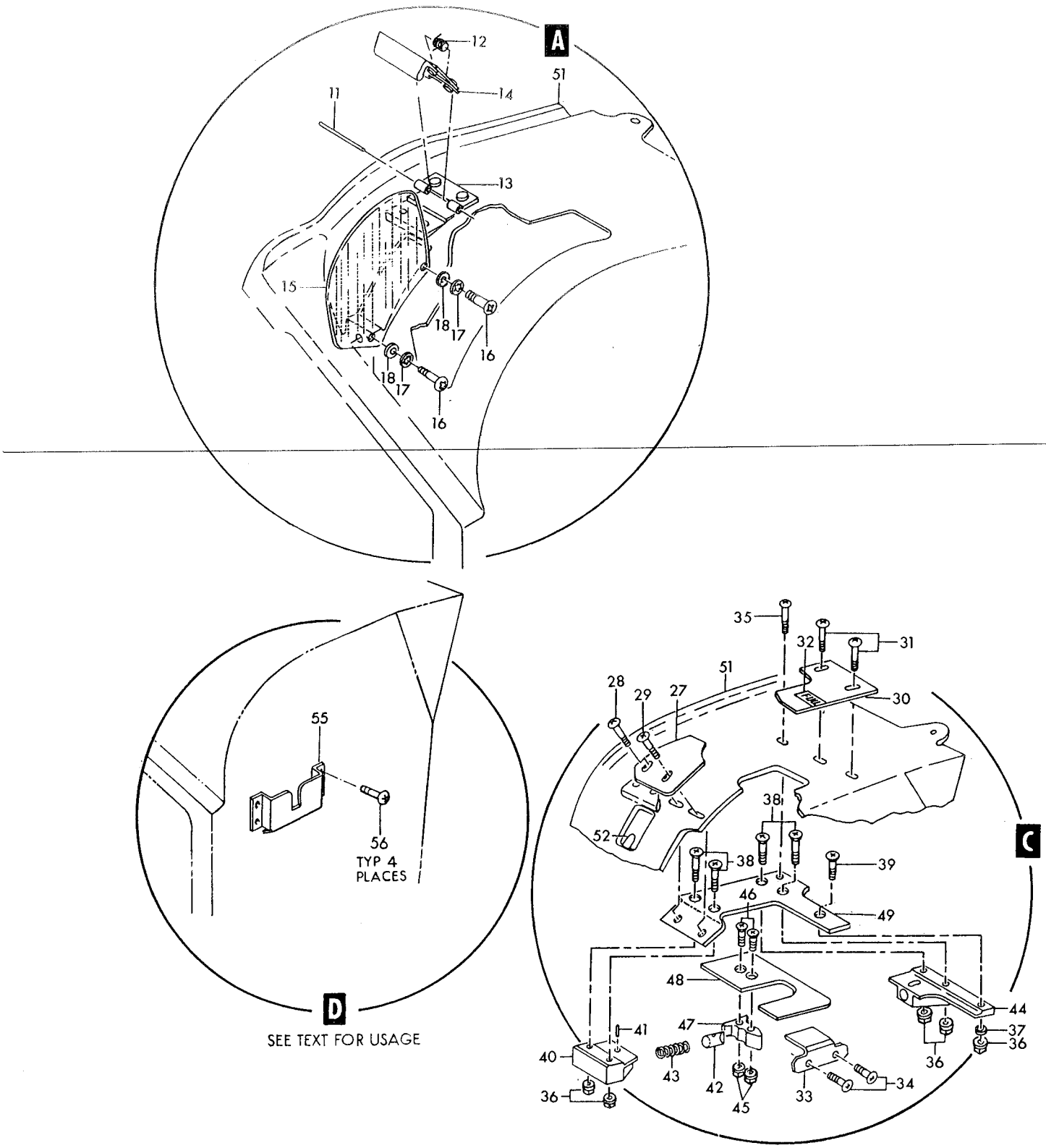

Figure 217— Throttle and Flap Control Housing (Sheet 2 of 2)

Figura e particolare	NDR	1	2	3	4	5	6	7	DENOMINAZIONE	Quant.	Codice applicab.
									Attaching Parts		
217-35	NAS623-3-7								SCREW (80205)	1	
	LS1551-190-688								WASHER, serrated (36659) (reqd between body assy and throttle housing)	1	
-36	MS21042L3								NUT (96906)	5	
-37	AN960D10								WASHER (88044)	1	
-38	NAS1203-11								SCREW (80205)	4	
-39	NAS1203-6								SCREW (80205)	1	
-40	458308								BODY, throttle detent LH	1	
-41	1-8X3-8T3CV								PIN, groove (73957)	1	
-42	208972								DETENT, throttle	1	
-43	798966-101								SPRING, throttle detent afterburner	1	
-44	208974								BODY, throttle detent RH	1	6701-6740
	208974-101								BODY, throttle detent RH	1	6741-
	760625-103								SLIDE ASSY, throttle afterburner	1	
-45	MS21042L3								NUT (96906)	2	
-46	NAS1203-8								SCREW (80205)	2	
-47	760253-101								RATCHET, throttle detent	1	
-48	847243-101								SLIDE, throttle detent	1	
-49	760282								BRACKET ASSY, throttle afterburner	1	
-50	851131-101								DECAL, throttle quadrant wiring	1	
-51	760259-501								QUADRANT ASSY, throttle control	1	
-52	781055-1								PIN, flap control	1	
-53	AN202KP25B								BEARING, ball (88044)	1	
-54	760589								SUPPORT, throttle control	1	
-55	FL0728-101	C.							SUPPORT, box jettison (NHA FL0242-000)	1	
-56	NAS623-2-3	C.							SCREW (80205)	4	
	BN330-832-2	C.							BUSHING (73197)	4	
	BB341-8	C.							NUT (73197)	4	

A - Removed per AA.1F-104-OT-636A
B - Reqd per AA.1F-104-OT-636A
C - Reqd per AA.1F-104-OT-767

Figura e particolare	NDR	DENOMINAZIONE 1 2 3 4 5 6 7	Quant.	Codice applicab.
		LEFT HAND SUB INSTRUMENT PANEL		
218- 1	849931-101	. PANEL ASSY, LH switch *(see fig. 159 for reqd)*	REF	6701-6765
	849931-103	. PANEL ASSY, LH switch *(see fig. 159 for reqd)*	REF	6766-6790
	851943-105	. PANEL ASSY, LH switch *(see fig. 159 for reqd)*	REF	6791-6815
	851943-103	. PANEL ASSY, LH switch *(see fig. 159 for reqd)*	REF	6816-
		Attaching Parts		
	2600-4	. STUD, camloc fastener (71286)	4	
		——————✲——————		
- 2	793478-7	. . PANEL, plastic edge lighted LH sub	1	6701-6790
- 3	851941-101	. . PANEL, plastic edge lighted LH sub	1	6791-
		Attaching Parts		
	AN515B6R8	. . SCREW (88044)	3	
	LS4446-6	. . WASHER, synthetic rubber (36659)	3	6701-6790
		——————✲——————		
	103C	. . . LIGHT ASSY, edge lighted panel (04211)	5	6701-6790
	115HGC	. . . LIGHT ASSY, hot and ground edge lighted panel (04211)	1	6701-6790
- 4	103-3	. . . . CAP ASSY, edge lighted panel (04211)	1	6701-6790
- 5	LS9093B1	. . . LIGHT ASSY, edge lighted panel (36659)	4	6791-
- 6	LS9030-327	. . LAMP, incandescent (blue-white) (36659)	6	6701-6790
- 7	LS9030-327	. . LAMP, incandescent (blue-white) (36659)	4	6791-
- 8	A4-1084	. . SWITCH, (S166) 4PDT 15 Amp plunger actuated (97198) (Lockheed spec dwg 670028-3)	1	
- 9	MS35333-121	. . LOCKWASHER (96906)	1	
-10	795234-1	. . GUARD, emergency jettison switch (intchg wth 61B40496)	1	
-11	FL1014-101	. . COVER, emergency jettison external weapon switch (A0019)	1	6766-
-12	AN960-816L	. . WASHER (88044)	1	
-13	797729-1	. . INSULATOR, electrical paper	1	6701-6790
-14	8906K1084	. . SWITCH, (S38) toggle (1 and 2 start and stop) (15605) (Lockheed spec dwg 740020-5)	2	
-15	MS24658-24K	. . SWITCH, (S94) (anti-skid) (96906)	1	
-16	MS35059-24	. . SWITCH, (S105) (engine duct anti-ice) (96906)	1	
-17	2TL130-1	. . SWITCH, (S100) DPDT toggle (landing light-taxi light) (91929) (Lockheed spec dwg 613444-25)	1	
-18	SS48152	. . PLUG, button (61864)	1	
-19	6700	. . CONTROL ASSY, (S41) main landing gear (A2836) (83564) (Lockheed spec dwg 613300) (see T.O. 8D3-11-3-3)	1	6791-
		Attaching Parts		
	AN507-832R8	. . SCREW (88044)	2	
-20	786679-1	. . SHIM, landing gear control	1	
		——————✲——————		
-21	763292	. . DECAL, landing gear downlock	1	
-22	AN507-1032R12	. . SCREW (grd stud) (88044)	1	6701-6790
-23	LS2816-4	. . WASHER (grd stud) (36659)	1	6701-6790
-24	AN935-10L	. . WASHER (grd stud) (88044)	1	6701-6790
-25	AN345-10	. . NUT (grd stud) (88044)	1	6701-6790
-26	AN960-10L	. . WASHER (grd stud) (88044)	1	6701-6790
-27	MS21042L3	. . NUT (grd stud) (96906)	1	6701-6790
-28	MS21919WDG10	. . CLAMP (96906)	1	6701-6790
-29	MS21919WDG8	. . CLAMP (96906)	1	6791-
		Attaching Parts		
-30	AN507-1032R48	. . SCREW (88044)	1	
-31	LS607-48	. . SPACER, phenolic (36659)	1	
-32	LS607-28	. . SPACER, phenolic (36659)	1	
-33	AN345-10	. . NUT (88044)	1	
-34	MS21042L3	. . NUT (96906)	1	
		——————✲——————		
	851942-101	. . PANEL, plastic edge lighted LH sub	1	6791-
-35	793478-1	. . PLATE, LH sub panel mounting	1	6701-6790
-36	851940-101	. . PLATE ASSY, LH sub panel mounting	1	6791-
-37	NAS514P1032-12	. . . SCREW (grd stud) (80205)	1	6791-

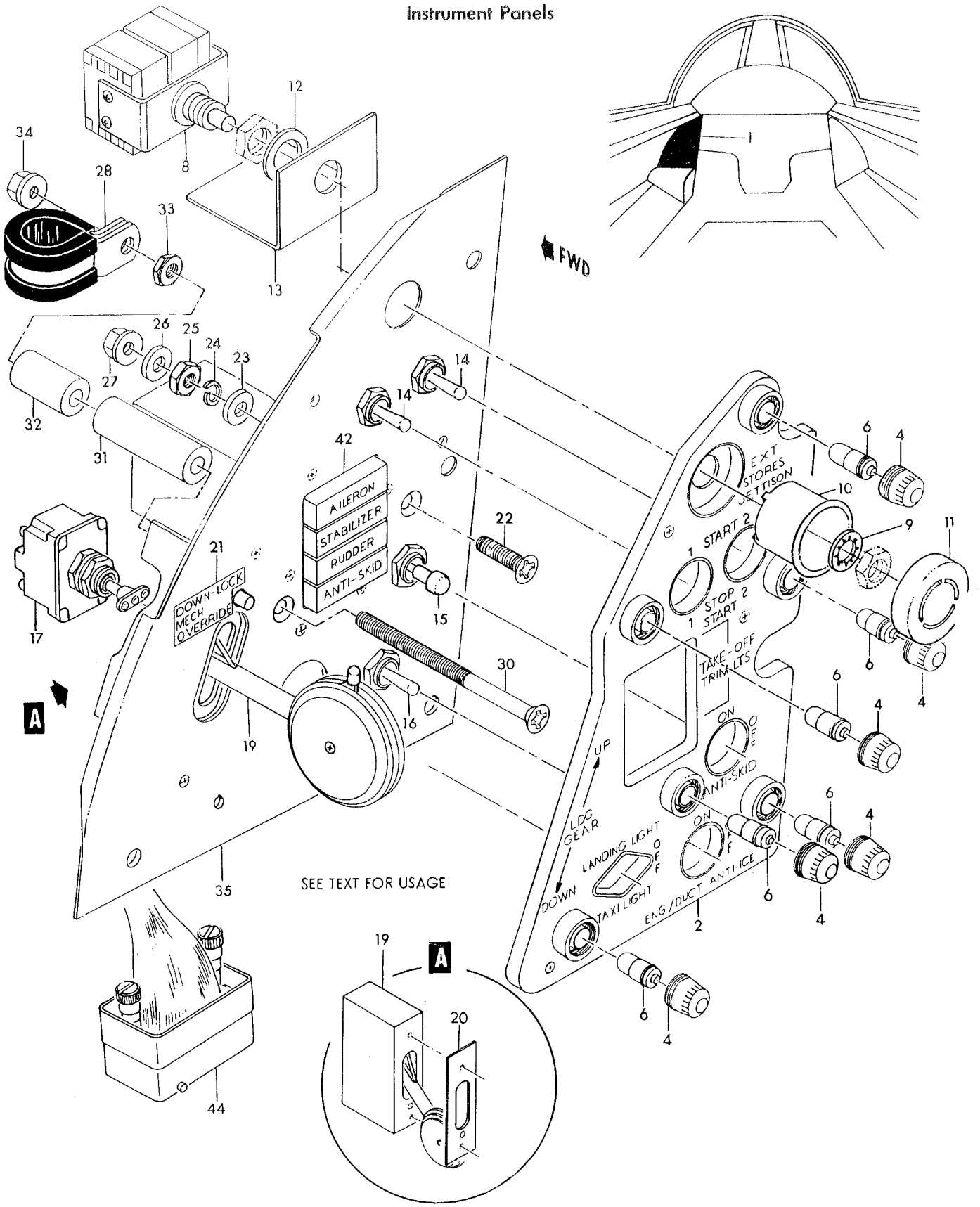

Figure 218—Left Hand Sub Instrument Panel (Sheet 1 of 2)

Instrument Panels

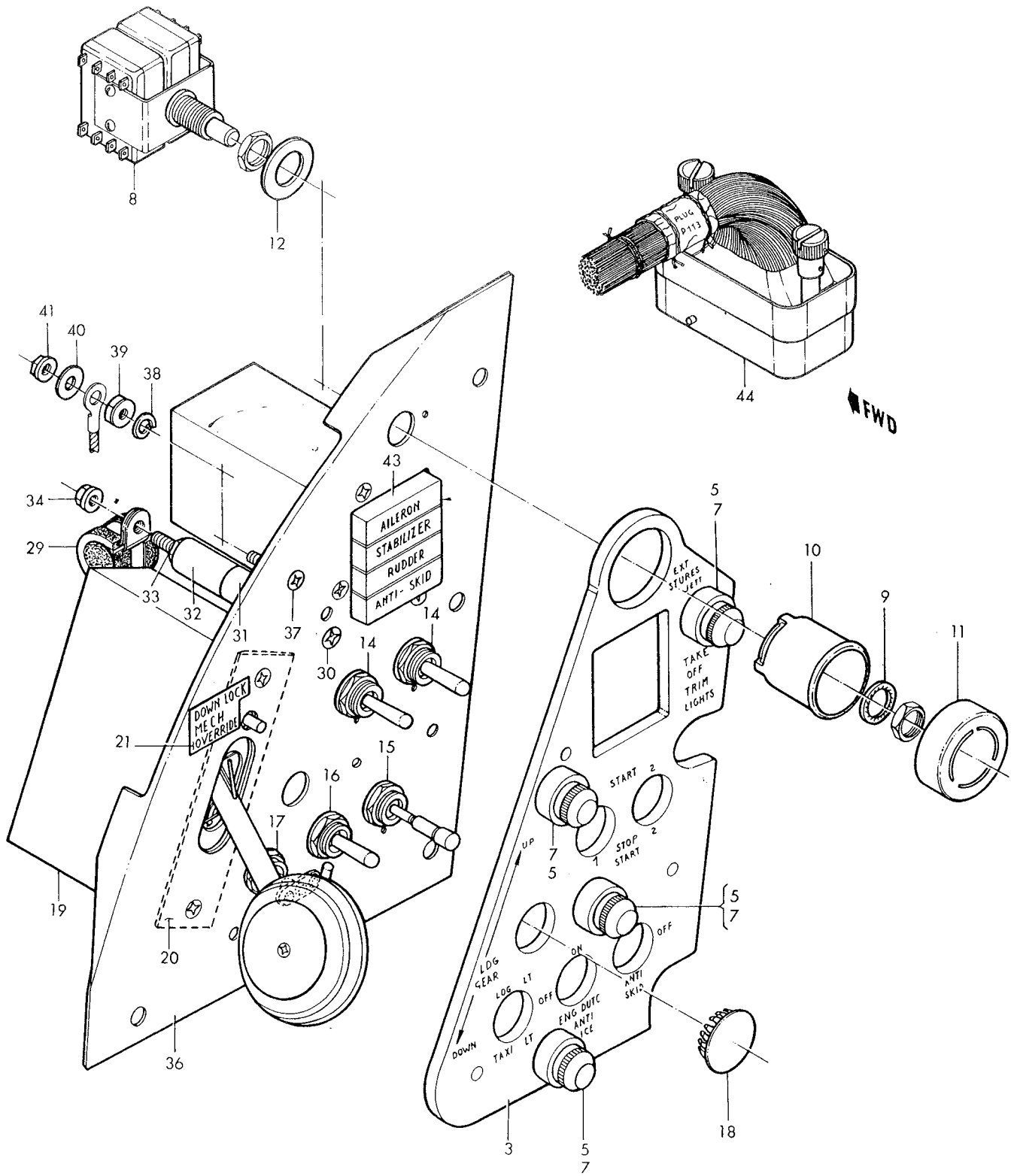

Figure 218-Left Hand Sub Instrument Panel (Sheet 2 of 2)

Figura e particolare	NDR	1 2 3 4 5 6 7 DENOMINAZIONE	Quant.	Codice applicab.
218-38	MS35337-43	. . . WASHER (grd stud) (96906)	1	6791-
-39	AN345-10	. . . NUT (grd stud) (88044)	1	6791-
-40	AN960-10	. . . WASHER (grd stud) (88044)	1	6791-
-41	MS21042L3	. . . NUT (grd stud) (96906)	1	6791-
	849504-101	. . HARNESS ASSY, LH sub panel	1	6701-6765
	851953-101	. . HARNESS ASSY, LH sub panel	1	6766-6790
	851953-103	. . HARNESS ASSY, LH sub panel	1	6791-6815
	852415-101	. . HARNESS ASSY, LH sub panel	1	6816-
-42	LAI10-01	A. . . LIGHT ASSY, (DS13) indicator (A2829) (Reworked and reidentified as LAI11-02 per AA.1F-104S-OT-149) (LAI11-02 is sutbl sub) (alternate to R1645-3)	1	6701-6765
-43	LAI11-02	B. . . LIGHT ASSY, (DS2000) indicator (A2829) (Modified from part No. LAI10-01 by P.T.A.A.8-LAI1001-OT-101) (sutbl sub for LAI10-01)	1	6766-
	R1645-3	. . . LIGHT ASSY, (DS2000) indicator (00712) (Lockheed spec dwg 610123-11) (alternate to LAI10-01) (see LR5-14404-219-3)	REF	
		Attaching Parts		
	AN507-632R4	. . SCREW (88044)	4	
		Partial Breakdown Follows		
	MS25237-327	. . . . LAMP (96906)	8	
-44	EMRA66PM1A106	. . . CONNECTOR, (P8) plug (P-113 disc.) (81312)	1	

A - Removed per AA.1F-104S-OT-149
B - Reqd per AA.1F-104S-OT-149

Figura e particolare	NDR	1 2 3 4 5 6 7	DENOMINAZIONE	Quant.	Codice applicab.
			MAIN INSTRUMENT PANEL GLARE SHIELD, STRUCTURE AND DUST COVER		
219	850686-101	.	SHIELD INSTL, main instrument panel glare (NHA 849070-101)	1	
- 1	850989-101	. .	SHIELD ASSY, main instrument panel glare	1	
			Attaching Parts		
	AN507B632R10	. .	SCREW (88044)	10	
			*		
- 2	764198L	. . .	SLIDE ASSY, glare shield LH	1	
- 3	764198R	. . .	SLIDE ASSY, glare shield RH	1	
- 4	764194	. . . .	SLIDE, glare shield outer	1	
- 5	764195	. . . .	SLIDE, glare shield middle	1	
- 6	764196	. . . .	SLIDE, glare shield center	1	
- 7	764197	. . . .	STOP, main instrument panel glare shield slide	2	
- 8	764323L	. . . .	SPRING, glare shield slide catch LH	1	
	764323R	. . . .	SPRING, glare shield slide catch RH	1	
- 9	781202-1	. . .	SLIDE, glare shield door	2	
-10	781203-1	. . .	GUIDE, glare shield door	1	
-11	781203-2	. . .	GUIDE, glare shield door	1	
-12	784536-1	. . .	PANEL ASSY, fixed glare shield	1	
	40-3672	. . .	CATCH, friction bullet type (01930)	2	
-13	784537-1	. . .	PANEL ASSY, sliding glare shield	1	
-14	784537-2	. . .	PANEL ASSY, sliding glare shield	1	
-15	784538-1	. . .	DOOR ASSY, sliding glare shield	1	
	850062-101	A.	PANEL ASSY, main instrument (Modified and reidentified to 852198-101 per AA.1F-104-OT-759A) *(see fig. 220 for reqd)*	REF	6701-6740
	850062-105	A.	PANEL ASSY, main instrument (Modified and reidentified to 852198-101 per AA.1F-104-OT-759A) *(see fig. 220 for reqd)*	REF	6741-6815
	852198-101	B.	PANEL ASSY, main instrument (Supersedes 850062-101 and 850062-105 per AA.1F-104-OT-759A) *(see fig. 220 for reqd)*	REF	6816-
			Attaching Parts		
-16	MS27039C1-24	.	SCREW (96906)	4	
	AN960C10	.	WASHER (88044)	4	6701-6765
	MS21043-3	.	NUT (96906)	4	6701-6765
			*		
-17	850062-103	A. .	PANEL, main instrument	1	6701-6815
-17A	852198-103	B. .	PANEL, main instrument	1	
-18	NAS1021B08	. .	NUT (80205)	4	
-19	AN960-8	. .	WASHER (88044)	4	
-20	793030-1	. .	SPACER, upper stud snapslide	2	
-21	793029-1	. .	SPACER, snapslide stud	2	
-22	MS21326-5	. .	STUD (96906)	4	
-23	MS21332-3	. .	FASTENER (96906)	4	
-24	761417L	. .	BRACKET, instrument panel mounting	1	
	761417R	. .	BRACKET, instrument panel mounting	1	
-25	K171-4D	. .	INSULATOR, vibration (main instrument panel) (51116)	2	
-26	K171-20D	. .	INSULATOR, vibration (main instrument panel) (51116)	2	
-27	AN520B10R8	. .	SCREW (88044)	8	
-28	NAS1021B3	. .	NUT (80205)	8	
-29	850199-101	. .	STIFFENER, main instrument panel	1	
-30	850200-101	. .	STIFFENER, main instrument panel	1	
-31	850118-101	. .	PLATE, stanoby compass support	1	
			Attaching Parts		
-32	AN507B1032R24	A. .	SCREW (88044)	2	6701-6815
	MS24693BB280	B. .	SCREW (96906)	2	
-33	AN960B10	. .	WASHER (88044)	2	
-34	LS607-28	. .	SPACER, phenolic (36659)	2	
-35	NAS1021B3	. .	NUT (80205)	2	
			*		
-36	799765-101	. .	BRACKET, instrument panel special weapon warning light	1	

Instrument panels

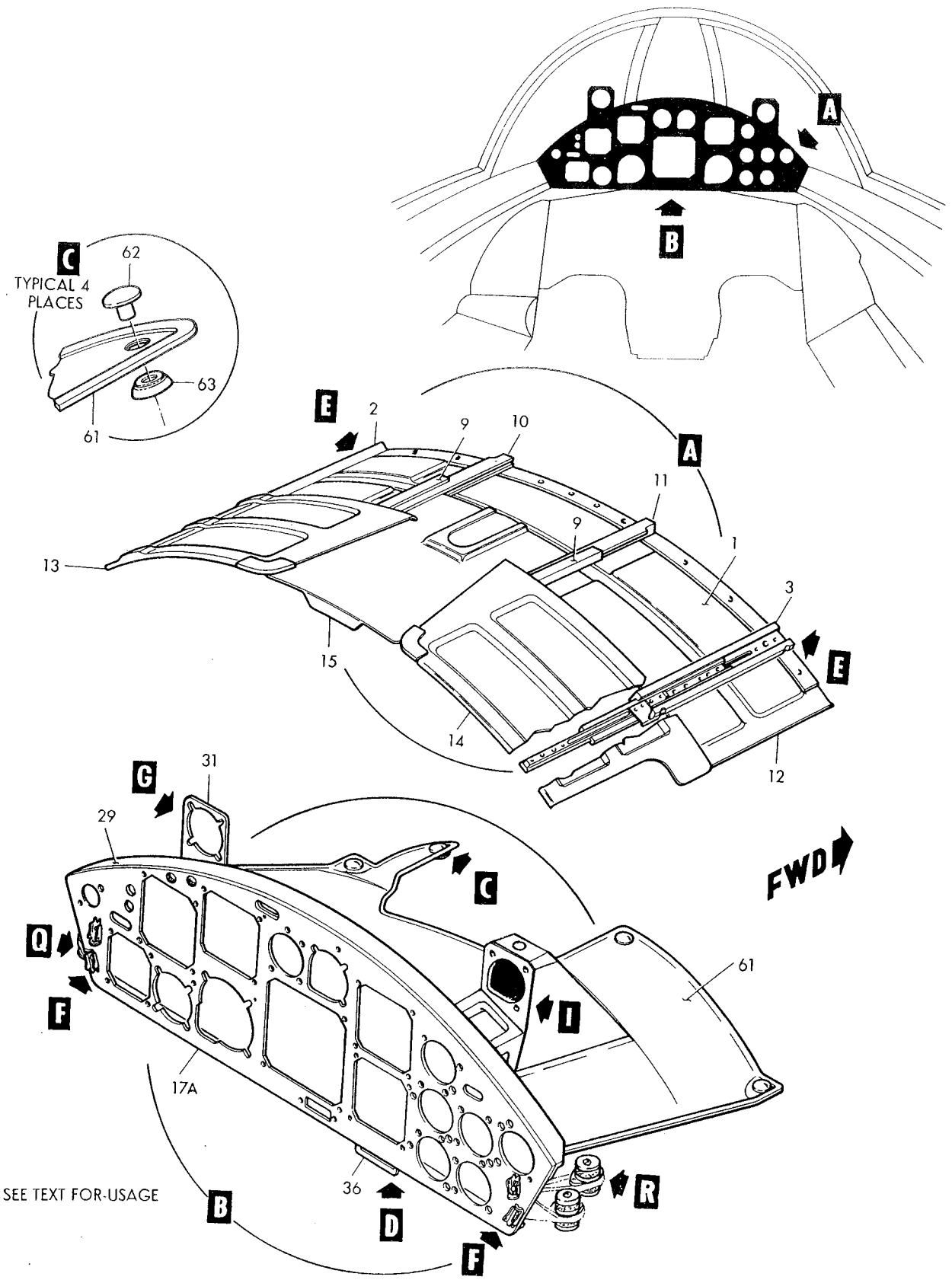

Figure 219–Main Instrument Panel Glare Shield Structure and Dust Cover (Sheet 1 of 4)

Instrument panels

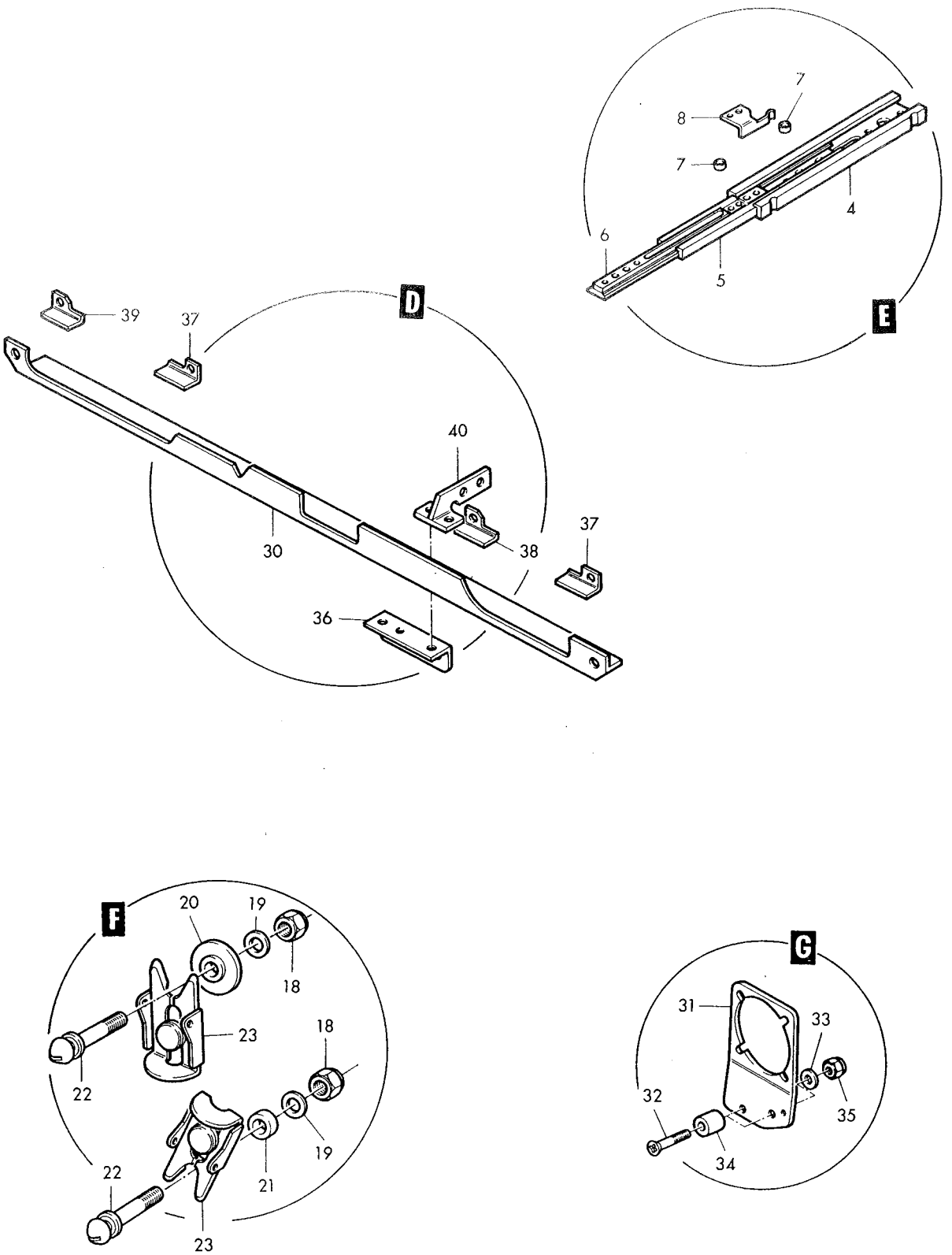

Figure 219–Main Instrument Panel Glare Shield Structure and Dust Cover (Sheet 2 of 4)

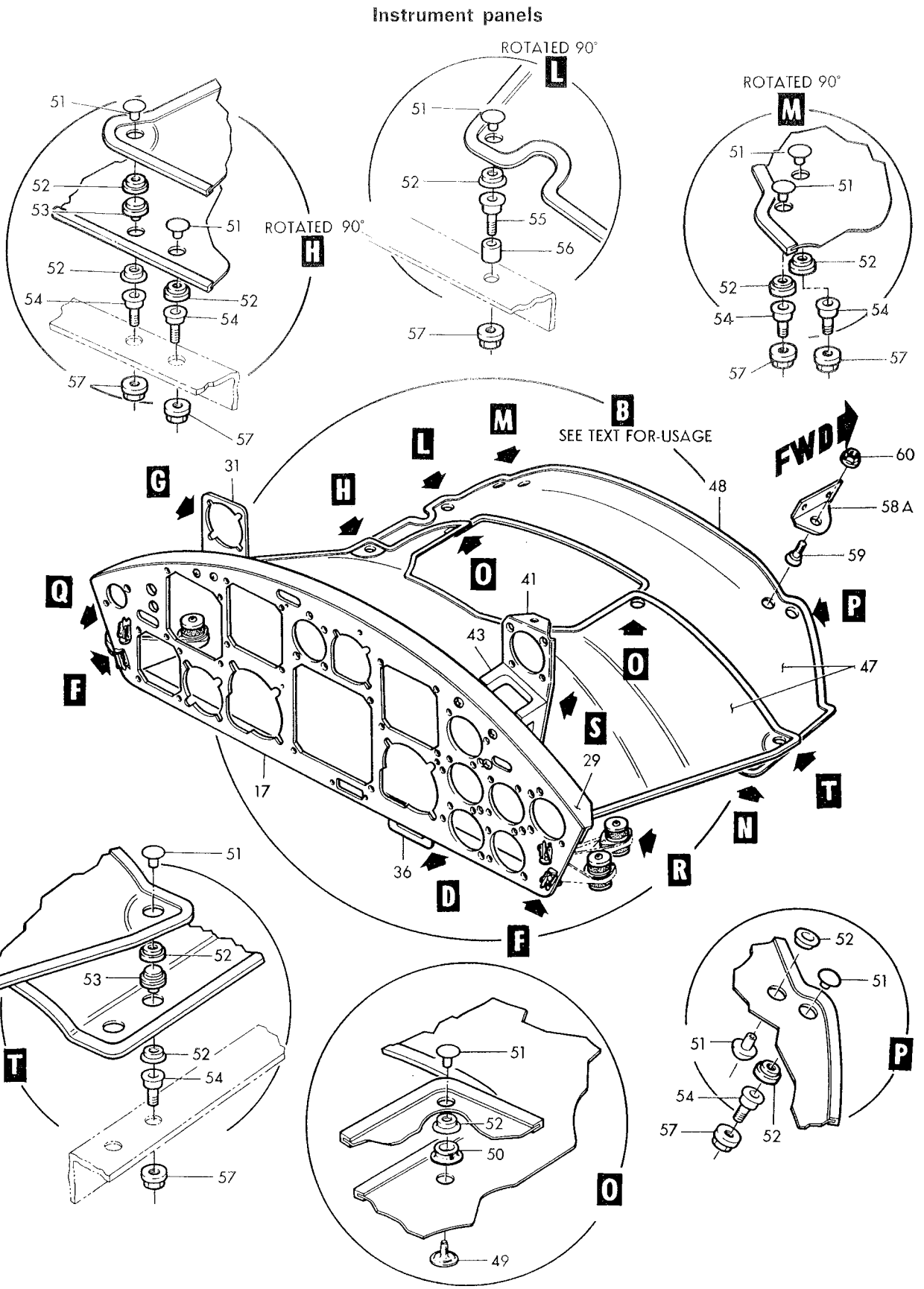

Figure 219-Main Instrument Panel Glare Shield Structure and Dust Cover (Sheet 3 of 4)

Instrument Panels

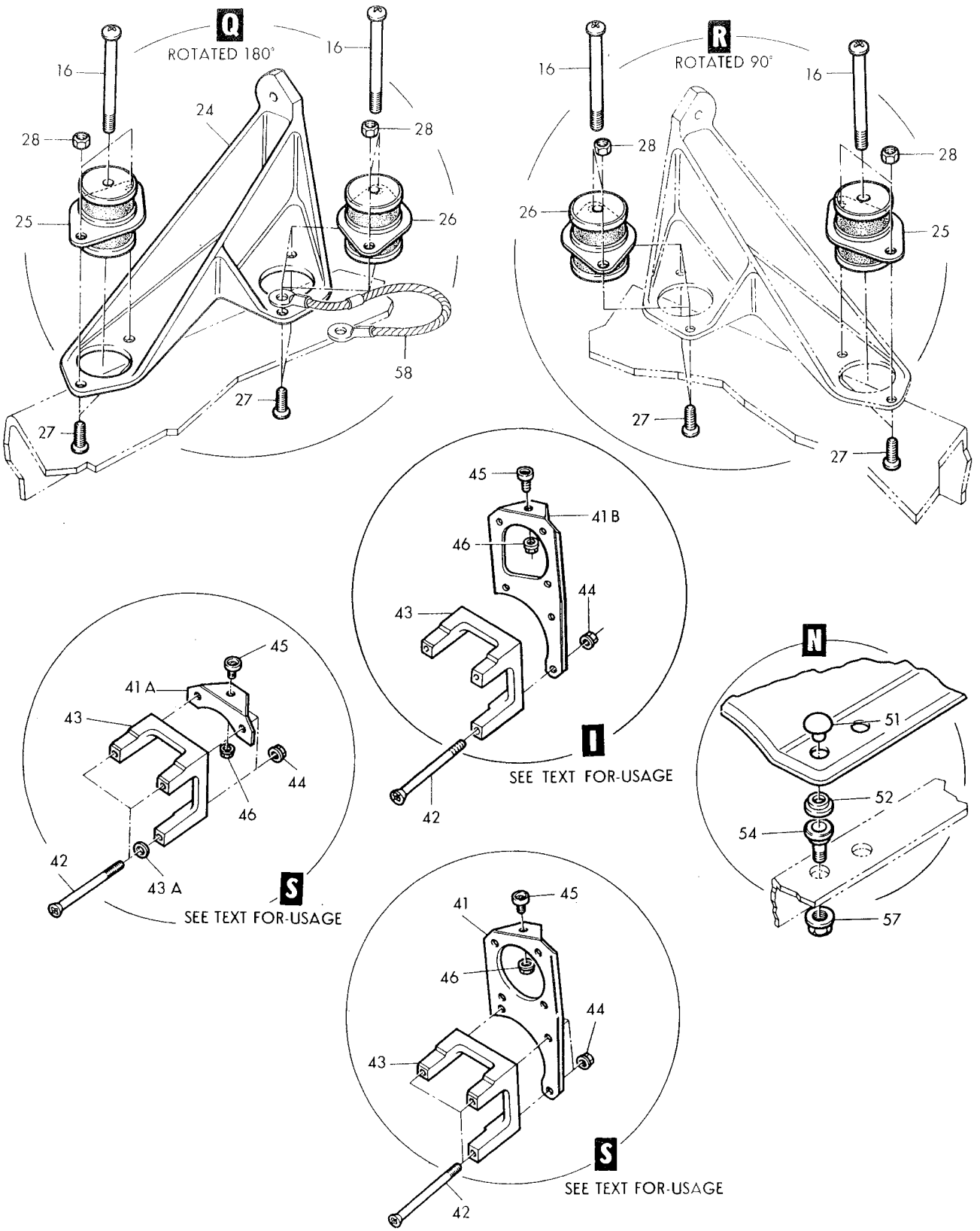

Figure 219-Main Instrument Panel Glare Shield Structure and Dust Cover (Sheet 4 of 4)

Figura e particolare	NDR	1 2 3 4 5 6 7	DENOMINAZIONE	Quant.	Codice applicab.
			Attaching Parts		
219	AN507-1032R8	A.	SCREW (88044)	1	6701-6815
	MS24693S272	B.	SCREW (96906)	1	
	AN507-1032R10	A.	SCREW (88044)	1	6701-6815
	MS24693S273	B.	SCREW (96906)	1	
	MS21042L3		NUT (96906)	2	
	852040-101		STRIP ASSY, instrument panel cover *(see fig. 220 for reqd)*	REF	
	790384-1		STRIP ASSY, instrument panel cover *(see fig. 220 for reqd)*	REF	
			Attaching Parts		
	AN507B632R6	A.	SCREW (88044)	4	6701-6815
	MS24693BB26	B.	SCREW (96906)	4	
-37	763875		BRACKET, main instrument panel light	2	
-38	785840-1		BRACKET, main instrument panel light	1	
-39	850475-101		BRACKET, main instrument panel light	1	
-40	763876		BRACKET, main instrument panel ground stud	1	
-41	852008-101		BRACKET, compressor inlet temperature indicator	1	6701-6740
-41A	FL0339-133		BRACKET (A0019)	1	6741-6815
-41B	852174-101	B.	BRACKET, accelerometer	1	
			Attaching Parts		
-42	NAS560HK3-27		SCREW (80205)	3	
-43	852011-101		SPACER	1	
-43A	AN960D10		WASHER (88044)	1	6741-6815
-44	MS21043-3		NUT (96906)	3	
-45	AN227-10M		STUD (88044)	1	
-46	MS21042L08		NUT (96906)	1	
-47	797370-1		COVER INSTL, instrument panel dust (NHA 850168-101)	1	6701-6740
	797370-101		COVER INSTL, instrument panel dust (NHA 850168-101)	1	6741-
-48	797370-7		COVER ASSY, instrument panel dust	1	6701-6740
	797370-103		COVER ASSY, instrument panel dust	1	6741-
-49	AN227-9		EYELET (88044)	2	
-50	AN227-8		STUD (88044)	2	
-51	AN227-6A		BUTTON (88044)	11	
-52	AN227-7		SOCKET (88044)	13	
-53	XB10372		STUD, eyelet (61864)	2	
	797370-3		STUD INSTL, main instrument panel (NHA 850168-101)	1	
-54	AN227-10M6		STUD (88044)	8	
-55	AN227-10M10		STUD (88044)	1	
-56	NAS43DD3-16		SPACER (80205)	1	
-57	MS21042L08		NUT (96906)	8	
-58	MS25083-1BB2		JUMPER (96906) *(see fig. 220 for reqd)*	REF	
			Attaching Parts		
	AN520B10R10	A.	SCREW (88044)	1	6701-6815
	MS35215-56	B.	SCREW (96906)	1	
	AN960B10		WASHER (88044)	1	
	NAS1021B3	A.	NUT (80205)	1	6701-6815
	MS21044B3	B.	NUT (96906)	1	
-58A	790986-1		BRACKET ASSY, dust cover support *(see fig. 202 for reqd)*	REF	
-59	AN227-10M6		STUD (88044)	1	
-60	MS21042L08		NUT (96906)	1	
-61	851748-101		COVER ASSY, fwd instrument panel dust *(see fig. 220 for reqd)*	REF	
-62	MS27980-1R		BUTTON (96906)	4	
-63	MS27980-6N		SOCKET (96906)	4	

A - Removed per AA.1F-104-OT-759B
B - Reqd per AA.1F-104-OT-759B

Figura e particolare	NDR	DENOMINAZIONE (1 2 3 4 5 6 7)	Quant.	Codice applicab.
		MAIN INSTRUMENT PANEL COMPONENTS		
220	850064-101	. PANEL INSTL, main instrument (NHA 850168-101)	1	6701-6740
	850064-105	. PANEL INSTL, main instrument (NHA 850168-101)	1	6741-6815
	852200-101	. PANEL INSTL, main instrument (NHA 850168-101)	1	6816-
	850063-101	. . PANEL ASSY, main instrument complete	1	6701-6740
	850063-103	. . PANEL ASSY, main instrument complete	1	6741-6815
	852199-101	. . PANEL ASSY, main instrument complete	1	6816-
- 1	522-2310-025	. . . SWITCH, (E86) channel selector (A0212) (07216) (Lockheed spec dwg 616258-9) (see T.O.12R2-4-61-4)	1	
		Attaching Parts		
	AN515B6R10	. . . SCREW (88044)	4	6701-6815
	MS35214-28	. . . SCREW (96906)	4	6816-
	MS33737-11	. . . NUT (96906)	4	
- 2	JG222B1	. . . INDICATOR, (M17) pitch trim (A0019) (94580) (Lockheed spec dwg 620679-1) (see sep LR whn avail)	1	
- 3	A2310	. . . INDICATOR, (M11) turn and slip (type MD1A) (A0307) (06275) (Lockheed spec dwg 620744-1) (see T.O. 5F8-4-14-3)	1	
		Attaching Parts		
	AN515B6R20	. . . SCREW (88044)	2	6701-6815
	MS24693BB33	. . . SCREW (96906)	2	6816-
	AN507B632R18	. . . SCREW (88044)	2	6701-6815
	MS35214-32	. . . SCREW (96906)	2	6816-
	NAS43DD1-16	. . . SPACER (80205)	2	
	MS33737-11	. . . NUT (96906)	4	
- 4	D22061-22-010	. . . ALTIMETER, pressure (type MA1) (A0307) (89944) (Lockheed spec dwg 620743-1) (see LR5-14404-300-4)	1	
		Attaching Parts		
	AN515B6R22	. . . SCREW (88044)	1	6701-6815
	MS35214-111	. . . SCREW (96906)	1	6816-
	AN507B632R24	. . . SCREW (88044)	2	6701-6815
	MS24693BB36	. . . SCREW (96906)	2	6816-
	NAS43DD1-24	. . . SPACER (80205)	3	
	MS33737-11	. . . NUT (80205)	3	
- 5	C19522-22-007	. . . INDICATOR, airspeed (A0307) (89944) (Lockheed spec dwg 670968-101) (intchg wth 1450-62B-A62-1) (see T.O. 5F8-2-35-4)	1	
	1450-62B-A62-1	. . . INDICATOR, airspeed (99251) (Lockheed spec dwg 670968-101) (see sep. T.O. whn avail) (intchg wth C19522-22-007)	REF	
		Attaching Parts		
	AN515B6R24	. . . SCREW (88044)	1	6701-6815
	MS35214-33	. . . SCREW (96906)	1	6816-
	AN515B6R20	. . . SCREW (88044)	3	6701-6815
	MS35214-32	. . . SCREW (96906)	3	6816-
	NAS43DD1-6	. . . SPACER (80205)	1	
	NAS43DD1-24	. . . SPACER (80205)	4	
	MS33737-11	. . . NUT (96906)	4	
- 6	620B5A	. . . INDICATOR, (M94) inlet compressor temperature amplifier (35918) (Lockheed spec dwg 622281-101) (see T.O. 5E6-3-57-4)	1	6701-6740
- 7	3419-5JA1	. . . ACCELEROMETER, aircraft (A1996) (99251) (Lockheed spec dwg 620747-1) (see LR5-14404-286-4)	1	
		Attaching Parts		
	AN507B632R18	. . . SCREW (88044)	2	6701-6815
	MS24693BB33	. . . SCREW (96906)	2	6816-
	AN515B6R14	. . . SCREW (88044)	1	6701-6815
	MS35214-30	. . . SCREW (96906)	1	6816-
	AN960-416L	. . . WASHER (88044)	2	
	NAS43DD1-12	. . . SPACER (80205)	2	

Instrument Panels

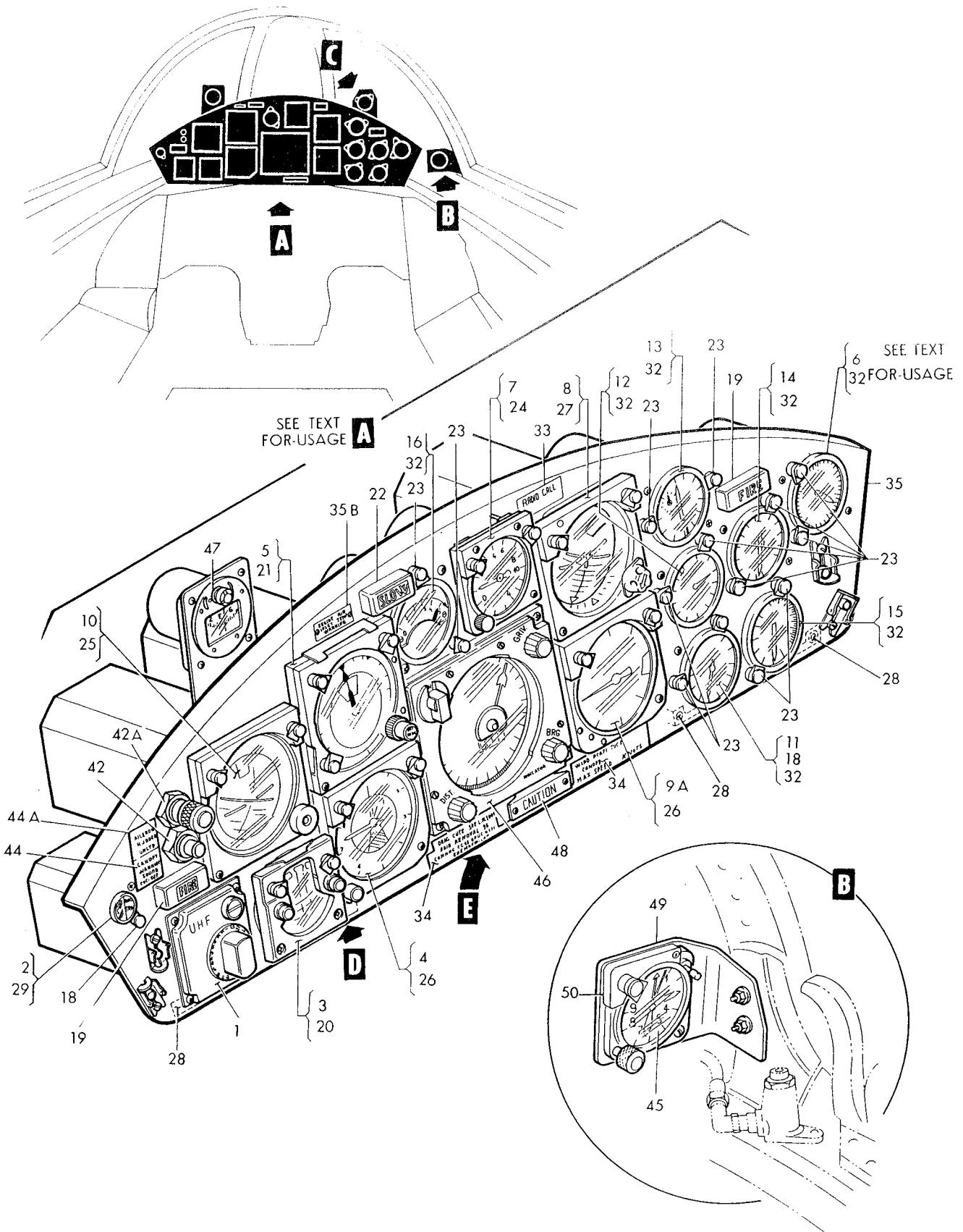

Figure 220-Main Instrument Panel Components (Sheet 1 of 3)

Instrument Panels

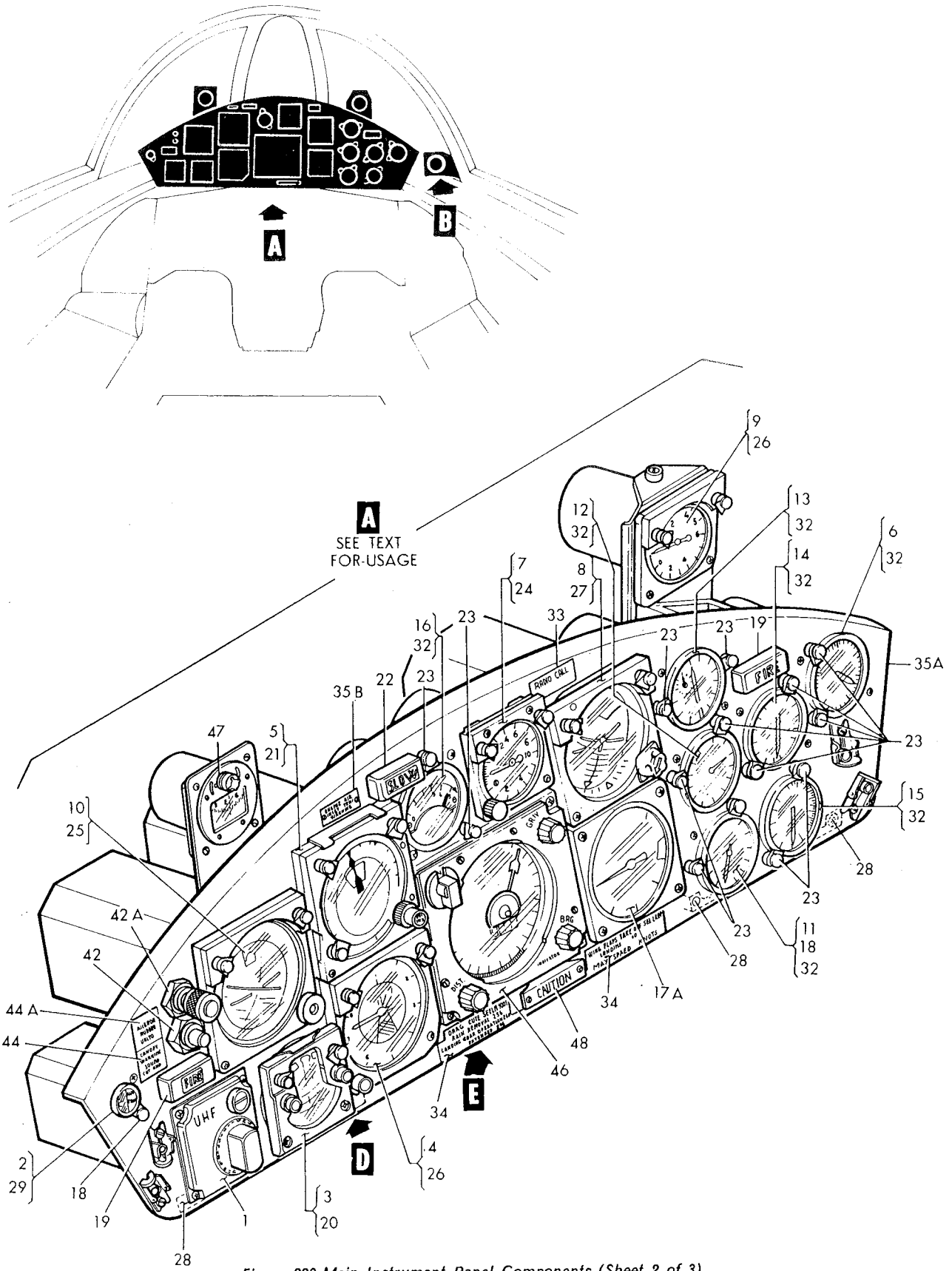

Figure 220-Main Instrument Panel Components (Sheet 2 of 3)

Instrument Panels

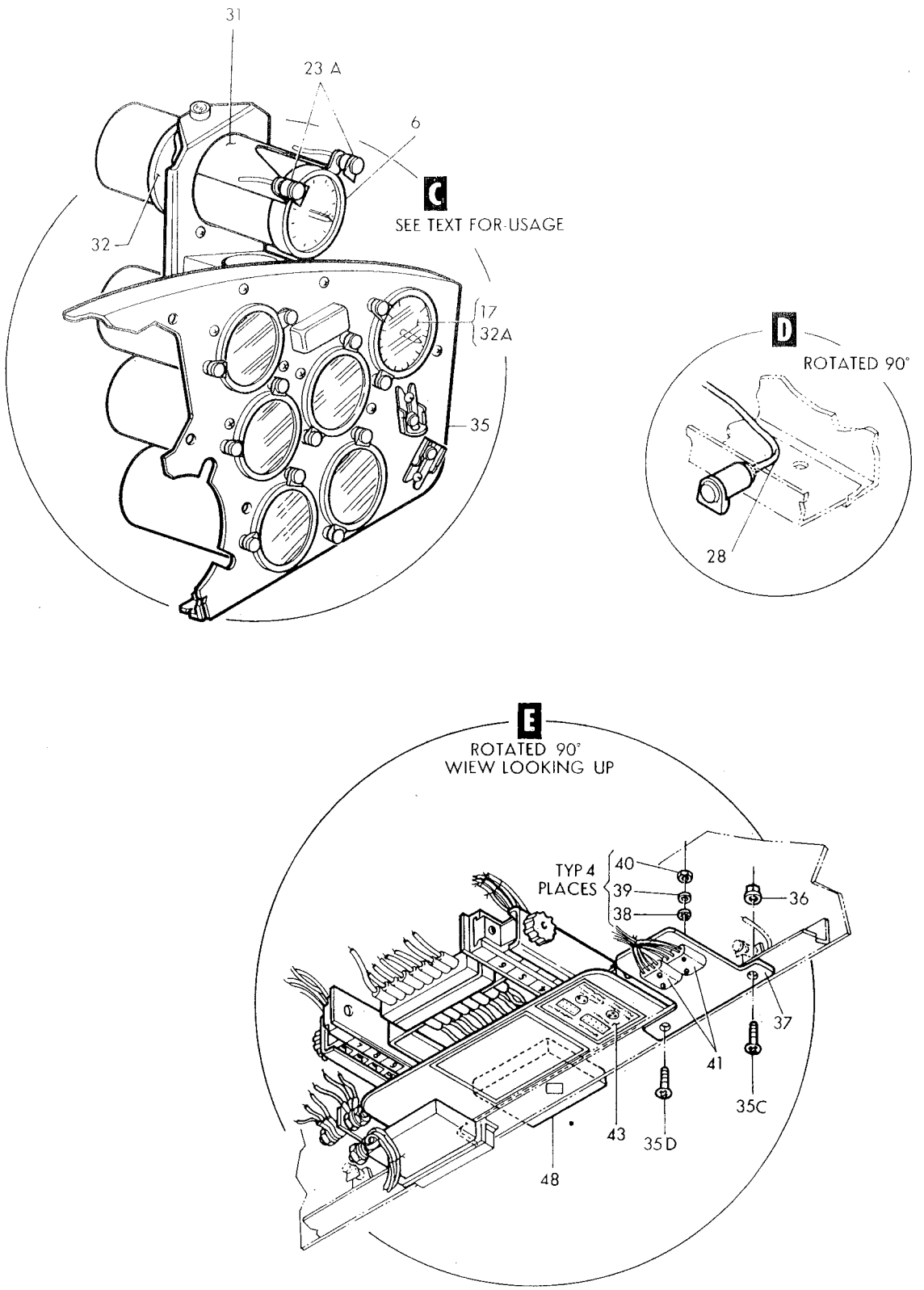

Figure 220-Main Instrument Panel Components (Sheet 3 of 3)

Figura e particolare	NDR	1 2 3 4 5 6 7 DENOMINAZIONE	Quant.	Codice applicab.
220	MS33737-1	NUT (96906)	3	
		✲		
- 8	137714-01-02	INDICATOR, (M18) attitude (A1996) (35351) (Lockheed spec dwg 620700-101) (see T.O. 5F8-3-19-4)	1	
		Attaching Parts		
	AN507B632R22	SCREW (88044)	2	
	AN515B6R20	SCREW (88044)	2	6701-6815
	MS35214-32	SCREW (96906)	2	6816-
	NAS43DD1-24	SPACER (80205)	4	
	MS33737-11	NUT (96906)	4	
		✲		
- 9	A25363-22-001	D. INDICATOR, rate of climb (A0307) (89944)	1	
- 9A	1650-6ANA6-4	INDICATOR, rate of climb (99251) (MS28075-1) (Lockheed spec dwg 620745-101) (see T.O. 5F8-9-17-3)	1*	
		Attaching Parts		
	AN515B6R16	SCREW (88044)	1	6701-6815
	MS24693BB33	SCREW (96906)	2	6816-
	AN507B632R18	SCREW (88044)	2	6701-6815
	MS35214-31	SCREW (96906)	1	6816-
	NAS43DD1-24	SPACER (80205)	3	6816-
	MS33737-11	NUT (96906)	3	
		✲		
-10	C115553-2-1	INDICATOR, (M140) emergency standby attitude type AG4 (200V) (A0076) (Alternate to 644-1BD) (see sep. pub. whn avail.)	1	
	644-1BD	INDICATOR, (M140) emergency standby attitude (200V) (36659) (Alternate to C115553-2-1)	REF	
		Attaching Parts		
	AN515B6R18	SCREW (88044)	2	6701-6815
	MS24693BB38	SCREW (96906)	2	6816-
	AN507B632R22	SCREW (88044)	2	6701-6815
	MS35214-109	SCREW (96906)	2	6816-
	NAS43DD3-30	SPACER (80205)	2	
	MS33737-11	NUT (96906)	4	6701-6815
	MS33737-12	NUT (96906)	4	6816-
		✲		
-11	AA579-85-00	INDICATOR, (M15) jet nozzle position (A2233) (alternate to 9806-13)	1	
	9806-13	INDICATOR, (M15) jet nozzle position (77045) (Lockheed spec dwg 629306-3) (alternate to AA579-85-00) (see T.O. 5P3-3-49-3)	REF	
-12	345	INDICATOR, (M13) engine exhaust temperature (A1582) (alternate to 185800) (see sep. pub. whn avail.)	1	
	185800	INDICATOR, (M13) engine exhaust temperature (type MJ3) (65092) (Lockheed spec dwg 622277-1) (see T.O. 5E6-3-61-4) (alternate to 345)	REF	
-13	8DJ81CAK2	INDICATOR, (M12) tachometer (97424) (Lockheed spec dwg 622276-5) (see T.O. 5E6-2-38-3)	1	
-14	C114650-1	INDICATOR, (M14) oil pressure (A0076) (type AR4) (intchg wth RS4AB and 25113A30K11A3) (see sep publ. whn avail.)	1	
	25113A30K11A3	INDICATOR, (M14) oil pressure (02987) (Lockheed spec dwg 624411-1) (intchg wth SR4AB and C114650-1) (see T.O. 5P3-4-75-3)	REF	
	SR4AB	INDICATOR, (M14) oil pressure (61349) (Lockheed spec dwg 624411-1) (intchg wth 25113A30K11A3 and C114650-1) (see sep LR whn avail)	REF	
-15	C114650-2	INDICATOR, (M16) rate of flow (fuel) (A0076) (type AR5) (intchg wth SR8J and 25113B22D11A3) (see sep publ. whn avail)	1	
	25113B22D11A3	INDICATOR, (M16) rate of flow (fuel) (type MA6) (02987) (Lockheed spec dwg 624410-1) (intchg wth SR8J and C114650-2) (see T.O. 5P3-4-75-3)	REF	
	SR8J	INDICATOR, (M16) rate of flow (fuel) (type MA6) (61349) (Lockheed spec dwg 624410-1) (intchg wth 25113822D11A3 and C114650-2) (see sep T.O. whn avail)	REF	

Figura e particolare	NDR	1	2	3	4	5	6	7	DENOMINAZIONE	Quant.	Codice applicab.
220-16	346								INDICATOR, (M21) automatic pitch control (A1582) (alternate to 183613)	1	
									(see sep. pub. whn avail.)	1	
	183613								INDICATOR, (M21) automatic pitch control (65092) (Lockheed spec dwg 620588-3) (alternate to 346) (see T.O. 5A12-3-8-4)	REF	
-17	1000-00-000-5								INDICATOR, (M137) master nucleonic oil quantity indicating system (24494) (Lockheed spec dwg 670795-101) (see sep T.O. whn avail)	1	6701-6740
-17A	JG206B5B	D.							INDICATOR, (M2001) radar altimeter (94580)	1	
									Attaching Parts		
	MS35214-30	D.							SCREW (96906)	4	
	MS33737-11	D.							NUT (96906)	2	
-18	FIS109G								LIGHT ASSY, (DS72) clear shielded post type (A1587) (alternate to 26410CY)	2	
	26410CY								LIGHT ASSY, (DS72) clear shielded post type (72914) (Lockheed spec dwg 629232-11) (alternate to FIS109G)	REF	
	LS9030-327								LAMP, incandescent (blue-white) (36659)	2	
-19	FI615F								LIGHT ASSY, (DS11) indicator (fire warning) (A1587) (alternate to VM205-100)	2	
	VM205-100								LIGHT ASSY, (DS11) indicator (fire warning) (87034) (Lockheed spec dwg 618329) (alternate to FI615F)	REF	
	MS25237-327								LAMP (96906)	4	
-20	FIS111G								LIGHT ASSY, (DS78) clear shield instrument (A1587) (alternate to B6629C10)	1	
	B6629C10								LIGHT ASSY, (DS78) clear shield instrument (72914) (Lockheed spec dwg 629279-3) (alternate to FIS111G)	REF	
	LS9030-327								LAMP, incandescent (blue-white) (36659)	4	
-21	FIS116G								LIGHT ASSY, (DS74) clear shielded instrument (A1587) (alternate to 20-0003C1Y)	1	
	20-0003C1Y								LIGHT ASSY, (DS74) clear shielded instrument (72914) (Lockheed spec dwg 629324-9) (alternate to FIS116G)	REF	
	LS9030-327								LAMP, incandescent (blue-white) (36659)	3	
-22	FI615S								LIGHT ASSY, (DS10) indicator (slow) (A1587) (alternate to VM205-103)	1	
	VM205-103								LIGHT ASSY, (DS10) indicator (slow) (87034) (Lockheed spec dwg 618329-3) (alternate to FI615S)	REF	
	MS25237-327								LAMP (96906)	2	
-23	FIS107G2								LIGHT ASSY, (DS71) clear shielded instrument (A1587) (alternate to A6745CY)	13	
	A6745CY								LIGHT ASSY, (DS71) clear shielded instrument (72914) (Lockheed spec dwg 629232-9) (alternate to FIS107G2)	REF	
	LS9030-327								LAMP, incandescent (blue-white) (36659)	26	
-23A	FIS107G2								LIGHT ASSY, (DS71) clear shielded instrument (A1587) (alternate to A6745CY)	2	6701-6740
	A6745CY								LIGHT ASSY, (DS71) clear shielded instrument (72914) (Lockheed spec dwg 629232-9) (alternate to FIS107G2)	REF	6701-6740
	LS9030-327								LAMP, incandescent (blue-white) (36659)	4	6701-6740
-24	FIS105G2								LIGHT ASSY, (DS74) clear shielded instrument (A1587) (alternate to B6622C10)	1	
	B6622C10								LIGHT ASSY, (DS74) clear shielded instrument (72914) (Lockheed spec dwg 629234-9) (alternate to FIS105G2)	REF	
	LS9030-327								LAMP, incandescent (blue-white) (36659)	2	
-25	FIS104G-U2								LIGHT ASSY, (DS75) clear shielded instrument (A1587) (alternate to B6611C10)	1	
	B6611C10								LIGHT ASSY, (DS75) clear shielded instrument (72914) (Lockheed spec dwg 629246-3) (alternate to FIS104G-U2)	REF	
	LS9030-327								LAMP, incandescent (blue-white) (36659)	2	
-26	FIS104G-U3								LIGHT ASSY, (DS73) clear shielded instrument (A1587) (alternate to B6610C10)	2	
	B6610C10								LIGHT ASSY, (DS73) clear shielded instrument (72914) (Lockheed spec dwg 629233-5) (alternate to FIS104G-U3)	REF	
	LS9030-327								LAMP, incandescent (blue-white) (36659)	4	
-27	FIS104G-U2								LIGHT ASSY, (DS75) clear shielded instrument (A1587) (alternate to B6611C10)	1	
	B6611C10								LIGHT ASSY, (DS75) clear shielded instrument (72914) (Lockheed spec dwg 629246-3) (alternate to FIS104G-U2)	REF	
	LS9030-327								LAMP, incandescent (blue-white) (36659)	2	

Figura e particolare	NDR	1	2	3	4	5	6	7	DENOMINAZIONE	Quant.	Codice applicab.
220-28	FIS110G								LIGHT ASSY, (DS77) clear shielded post type instrument (A1587) (alternate to A7835CY)	4	
	A7835CY								LIGHT ASSY, (DS77) clear shielded post type instrument (72914) (Lockheed spec dwg 629258-3) (alternate to FIS110G)	REF	
	LS9030-327								LAMP, incandescent (blue-white) (36659)	4	
-29	MS28042-4A								CLAMP (96906)	1	
-31	852010-101								BRACKET, compressor inlet temperature indicator	1	6701-6740
-32	MS28042-1A								CLAMP (96906)	7	
-32A	MS28042-1A								CLAMP (96906)	1	6701-6740
-33	LS1422								NAMEPLATE, identification (radio call) (36659)	1	
									Attaching Parts		
	MS21318-2								SCREW (96906)	2	
									*		
-34	851927-101	B.							NAMEPLATE, maximum speed knots	1	
									Attaching Parts		
	MS21318-2								SCREW (96906)	2	
									*		
-35	850062-101	C.							PANEL ASSY, main instrument (Modified and reidentified to 852198-101 per AA.1F-104-OT-759B) *(see fig. 219)*	1	6701-6740
	850062-105	C.							PANEL ASSY, main instrument (Modified and reidentified to 852198-101 per AA.1F-104-OT-759B) *(see fig. 219)*	1	6741-6815
-35A	852198-101	D.							PANEL ASSY, main instrument (Supersedes 850062-101 and 850062-105 per AA.1F-104-OT-759B) *(see fig. 219)*	1	6816-
-35B	784873-1								NAMEPLATE, engine air inlet temperature warning	1	
									Attaching Parts		
	MS21318-2								SCREW (96906)	2	
									*		
	850201-101								PLUMBING INSTL, main instrument panel *(see fig. 134)*	1	
	852040-101								STRIP ASSY, instrument panel cover *(see fig. 219)*	1	
	790384-1								STRIP ASSY, instrument panel cover *(see fig. 219)*	1	
	MS25083-1BB2								JUMPER (96906) *(see fig. 219)*	1	
	851748-101								COVER ASSY, fwd instrument panel dust *(see fig. 219)*	1	
	849904-101								ELECTRICAL INSTL, main instrument panel *(see fig. 161)*	1	
	852406-101	A.							SUPPORT ASSY, canopy warning and flap asymmetry relays	1	
									Attaching Parts		
-35C	NAS602-8	A.							SCREW (80205)	1	
-35D	NAS602-8	A.							SCREW (80205) *(see fig. 161 for reqd)*	REF	
-36	MS21042L08	A.							NUT (96906)	1	
									*		
-37	852405-101	A.							SUPPORT, canopy warning and flap asymmetry relays	1	
-38	MS35333-36	A.							WASHER (96906)	4	
-39	1486	A.							WASHER (R0482)	4	
-40	B6M2,6S03	A.							NUT (R0482)	4	
	852222-101	A.							HARNESS ASSY, canopy warning sw and aileron rudder light	1	
-41	RZ0-14-101	A.							RELAY, (K56) (R0482)	2	
-42	W301W	A.							SWITCH, (S181) canopy warning sound cut-off (99707)	1	
-42A	MS25041-4	A.							LIGHT, (DS103) aileron and rudder unlimited (96906)	1	
	LS9030-327	A.							LAMP, incandescent (blue-white) (36659)	1	
-43	852225-101	A.							CHART, canopy warning sw and aileron rudder light	1	
-44	852224-101	A.							DECAL, canopy warning sound cut-off	1	
-44A	852223-101	A.							DECAL, aileron and rudder unlimited light	1	
	850064-103								INSTRUMENT INSTL, main instrument panel (NHA 849070-101)	1	6701-6815
	852200-103								INSTRUMENT INSTL, main instrument panel (NHA 849070-101)	1	6816-
-45	22322S-ET12								CLOCK, aircraft mechanical (type A13A) (A1617) (79300) (alternate to 400095 and 127-553A) (see T.O. 5N11-2-4-3)	1	
	400095								CLOCK, aircraft mechanical (79300) (alternate to 22322S-ET12 and 127-553A) (see sep pub whn avail.) (Lockheed spec dwg 620746-1)	REF	
	127-553A								CLOCK, aircraft mechanical (D0245) (alternate to 22322S-ET12 and 400095) (see sep. pub. whn avail.) (Lockheed spec dwg 620746-1)	REF	

Figura e particolare	NDR	1 2 3 4 5 6 7 DENOMINAZIONE	Quant.	Codice applicab.
		Attaching Parts		
220	AN515B6R10	SCREW (88044)	1	6701-6815
	MS35214-28	SCREW (96906)	1	6816-
	AN507B632R12	SCREW (88044) *(see fig. 202 for reqd)*	REF	6701-6815
	MS24693BB30	SCREW (96906) *(see fig. 202 for reqd)*	REF	6816-
-46	IND6AM0D1THRU7	INDICATOR, (M22) position homing (A1996) (05257) (Lockheed spec dwg 620693-107) (see LR5-14404-225-4)	1	
		Attaching Parts		
	AN515B6R18	SCREW (88044)	3	6701-6815
	MS35214-109	SCREW (96906)	3	6816-
	MS33737-11	NUT (96906)	3	
-47	8-079-005	COMPASS, (M139) pilot's standby magnetic (A0307) (see sep pub. whn avail) (alternate to C2F) (use 1980BU45-02 until exh)	1	
	C2F	COMPASS, (M139) pilot's standby magnetic (61349) (Lockheed spec dwg 620748-7) (see T.O. 5N3-3-6-3) (alternate to 8-079-005)	REF	
		Attaching Parts		
	AN515B6R10	SCREW (88044)	4	6701-6815
	MS35214-29	SCREW (96906)	4	6816-
	MS33737-15	NUT (96906)	4	
	MS21919DG2	CLAMP (96906)	1	
	MS35206-245	SCREW (96906)	1	
	MS21042L08	NUT (96906)	1	
	LS9030-327	LAMP, incandescent (blue-white) (36659)	1	
-48	MCL10-01	LIGHT ASSY, (DS61) master caution (A2829) (alternate to R3158-1) *(see fig. 161 for reqd)*	REF	
	R3158-1	LIGHT ASSY, (DS61) master caution (00712) (Lockheed spec dwg 618375-9) (alternate to MCL10-01) *(see fig. 161 for reqd)*	REF	
		Attaching Parts		
	NAS514P632-6	SCREW (80205)	REF	
-49	847349-101	BRACKET, clock support *(see fig. 202 for reqd)*	REF	
-50	B6630C10	LIGHT FIXTURE, (DS76) instrument (72914) (Lockheed spec dwg 629267-3) *(see fig. 202 for reqd)*	REF	

A - Reqd per AA.1F-104-OT-704A and AA.1F-104-OT-693
B - Modified per AA.1F-104S-OT-129
C - Removed per AA.1F-104-OT-759B
D - Reqd per AA.1F-104-OT-759B
* - NOTE - Installed on the AWX aircrafts only - Except the AWX aircrafts M.M. 6816 thru 6820 since the radar-altimeter it's already mounted.

Figura e particolare	NDR	1 2 3 4 5 6 7 DENOMINAZIONE	Quant.	Codice applicab.
		LOWER INSTRUMENT PANEL AND CENTER STAND STRUCTURE		
221-1	762439-9	B. BEZEL ASSY, radar scope (Modified and reidentified to 762439-101 per AA. 1F-104-OT-580A) *(see fig. 222 for reqd)*	REF	6701-6815
	762439-101	C. BEZEL ASSY, radar scope (Supersedes 762439-9 per AA.1F-104-OT-680A) *(see fig. 222 for reqd)*	REF	6816-
-2	NAS1222-3D	. . INSERT (self-locking heli-coil) (80205)	4	
-3	LS2728-7	. . STRIP, panel fastener recp (36659)	2	
	850057-101	. PANEL ASSY, lower instrument *(see fig. 222 for reqd)*	REF	
-4	45594-506	. . MOUNTING KIT, indicator upper (A0084) (94756) (Lockheed spec dwg 615667-1)	1	
		Attaching Parts		
	AN507-632R8	. . SCREW (88044)	4	
	MS21042L06	. . NUT (96906)	4	
		*		
-5	775577-1	. . BRACKET, emergency escape center pulley *(see fig. 211)*	1	
		Attaching Parts		
	NAS517-3-4	. . SCREW (80205)	4	
	MS21042L3	. . NUT (96906)	4	
		*		
-6	109	. . TERMINAL ASSY (04211)	1	
-7	45593-506	. . MOUNTING KIT, indicator side (A0084) (94756) (Lockheed spec dwg 615666-1)	2	
		Attaching Parts		
	AN507-1032R18	. . SCREW (88044)	2	
	LS607-21	. . SPACER, phenolic (36659)	2	
	NAS43DD3-42	. . SPACER (80205)	2	
	MS21042L3	. . NUT (96906)	2	
		*		
-8	761819	. . GUIDE, rudder pedal adjusting	1	
-9	761099	. . GUIDE, emergency escape handle	1	
-9A	NAS514P1032-12	. . SCREW (grd stud) (80205)	4	
	MS35337-43	. . WASHER (grd stud) (96906)	4	
	AN345-10	. . NUT (grd stud) (88044)	4	
	AN960-10	. . WASHER (grd stud) (88044)	4	
	LS2816-4	. . WASHER (grd stud) (36659)	4	
	MS21042L3	. . NUT (grd stud) (96906)	4	
	784844-1	. SUPPORT INSTL, radar indicator forward *(see fig. 69 for reqd)*	REF	
-10	762996L	. . CLIP, radar indicator forward support	1	
-11	762996R	. . CLIP, radar indicator forward support	1	
		Attaching Parts		
-12	NAS1096-3-8	. . SCREW (80205)	1	
-13	NAS1104-4	. . BOLT (80205)	1	
-14	AN960-10L	. . WASHER (88044)	1	
-15	AN960-416L	. . WASHER (88044)	1	
-16	MS21042L3	. . NUT (96906)	1	
-17	MS21042L4	. . NUT (96906)	1	
		*		
	784844-3	. . CHANNEL ASSY, radar indicator forward	1	
-18	762804	. . . CHANNEL, radar indicator forward support	1	
		Attaching Parts		
	NAS1096-3-8	. . . SCREW (80205)	4	
	AN960-10	. . . WASHER (88044)	4	
	MS21042L3	. . . NUT (96906)	4	
		*		
-19	45592-506	. . . MOUNTING KIT, indicator forward (A0084) (94756) (Lockheed spec dwg 615613-1)	1	
		Attaching Parts		
	NAS1096-3-12	. . . SCREW (80205)	4	
	AN960-10L	. . . WASHER (88044)	AR	
	AN960-10	. . . WASHER (88044)	4	

Instrument Panels

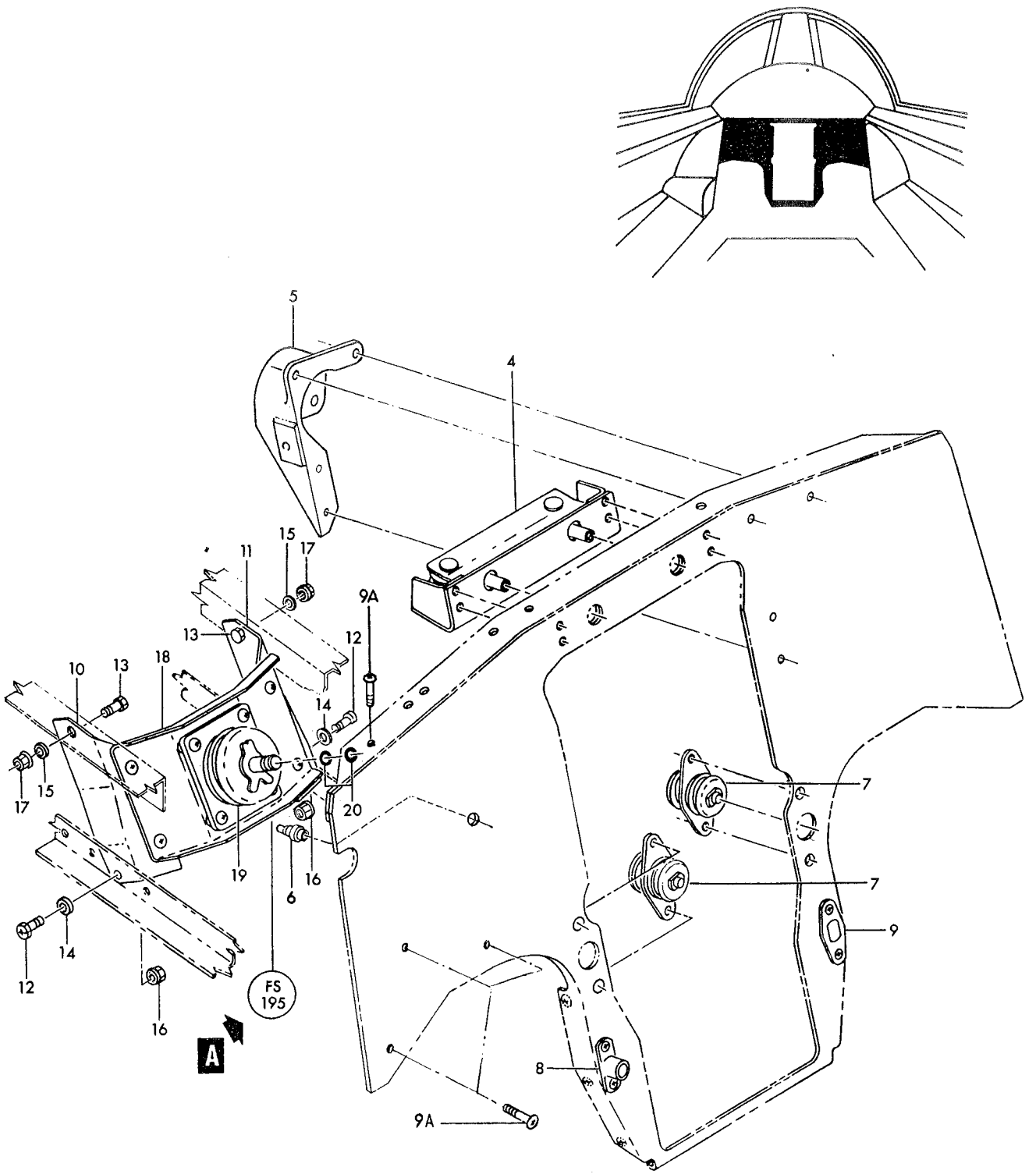

Figure 221— Lower Instrument Panel and Center Stand Structure (Sheet 1 of 2)

Instrument Panels

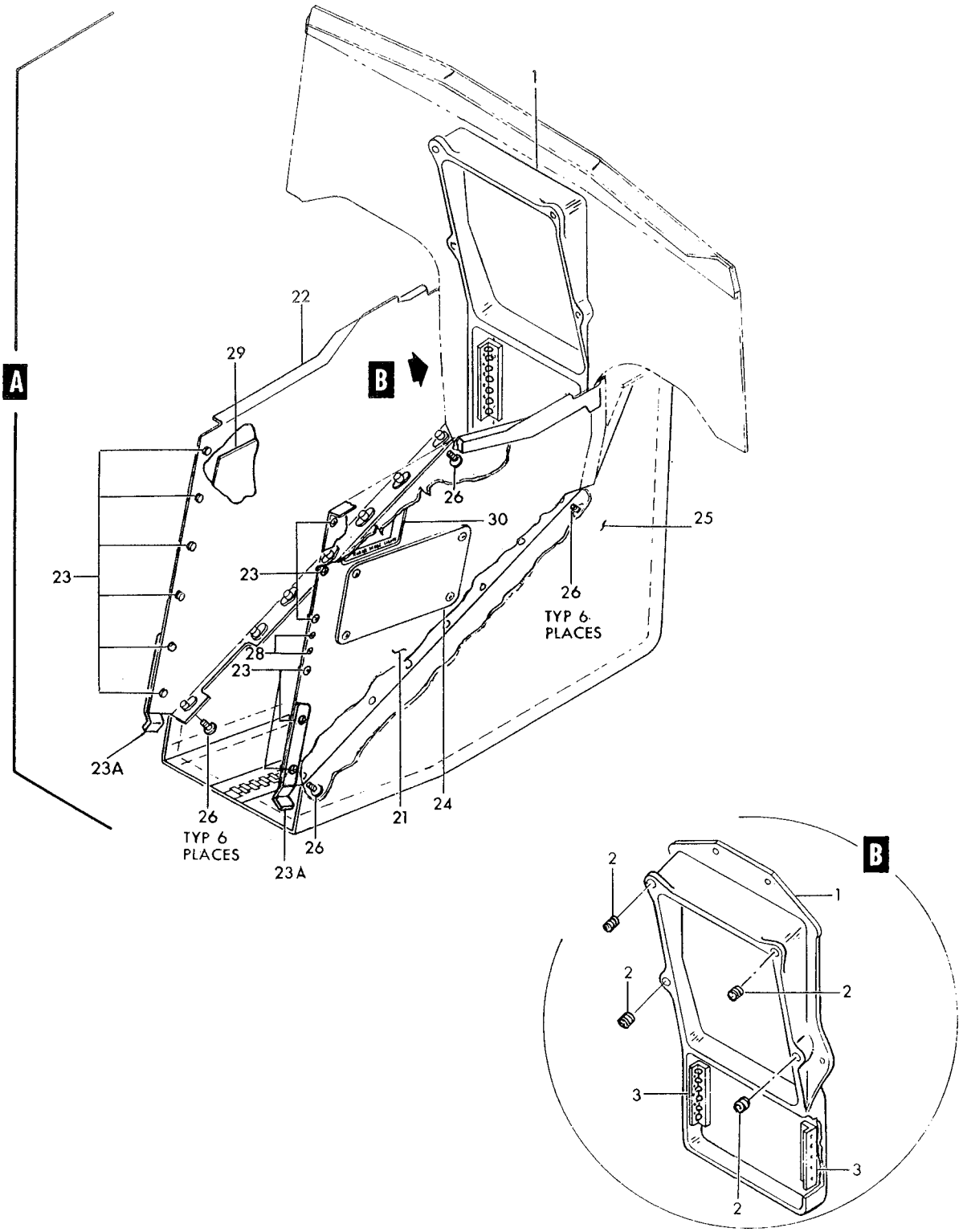

Figure 221—Lower Instrument Panel and Center Stand Structure (Sheet 2 of 2)

Figura e particolare	NDR	DENOMINAZIONE	Quant.	Codice applicab.
221	MS21042L3	NUT (96906)	4	
-20	MS28775-012	PACKING (96906) *(see fig. 157 for reqd)*	REF	6766-
	761202-501	STAND INSTL, center (NHA 850168-101)	1	6701-6765
	761202-101	STAND INSTL, center (NHA 850168-101)	1	6766-
-21	762726-503	PANEL ASSY, center stand	1	
-22	762726R	PANEL ASSY, center stand	1	
		Attaching Parts		
-23	AN520-10R8	SCREW (88044)	6	
-23A	852104-101	RETAINER, foot ramp	1	
	763791-501	COVER INSTL, stick shaker disc. access (reqd on 762726-503)	1	
-24	763850	COVER, center stand terminal bracket	1	
		Attaching Parts		
	AN507-832R8	SCREW (88044)	4	
-25	790785-1	BOOT ASSY, center stand	1	
		Attaching Parts		
-26	AN520-10R8	SCREW (88044)	14	
-28	AN520-10R12	SCREW (grd stud) (88044)	2	
	AN936A10	WASHER (grd stud) (88044)	2	
	AN935-10L	WASHER (grd stud) (88044)	2	
	AN345-10	NUT (grd stud) (88044)	2	
	AN960D10	WASHER (grd stud) (88044)	2	
	MS21042L3	NUT (grd stud) (96906)	2	
	849900-101	ELECTRICAL INSTL, forward fuselage *(see fig. 156 for reqd)*	REF	
-29	849962-101	DECAL, armament control panel	1	
-30	790665-1	DECAL, radar mode lights	1	

A - Reqd per AA.1F-104S-OT-107
B - Removed per AA.1F-104-OT-580A
C - Reqd per AA.1F-104-OT-580A

Figura e particolare	NDR	1 2 3 4 5 6 7 DENOMINAZIONE	Quant.	Codice applicab.
		LOWER INSTRUMENT PANEL COMPONENTS		
222	850192-101	PANEL INSTL, lower instrument (NHA 850168-101)	1	6701-6765
	850192-103	PANEL INSTL, lower instrument (NHA 850168-101)	1	6766-
- 1	850056-101	PANEL ASSY, lower instrument	1	6701-6765
	850056-105	PANEL ASSY, lower instrument	1	6766-
		Attaching Parts		
- 2	NAS623-3-3	SCREW (80205)	5	
- 3	AN507-1032R8	SCREW (88044)	6	
		*		
- 4	Q2714	KNOB ASSY, control (04211)	2	
- 5	LS9868-1	GUARD (36659)	1	
- 6	764350	NAMEPLATE, armament panel	1	
- 7	849943-101	PANEL, armament control with rounds counter and depression angle edge lighted	1	
		Attaching Parts		
	AN515B6R8	SCREW (88044)	2	
	LS4446-6	WASHER (36659)	2	
		*		
- 8	LS9093B3	LIGHT ASSY, edge lighted panel (36659)	12	
- 9	LS9030-327	LAMP, incandescent (blue-white) (36659)	12	
	849944-101	PANEL, edge lighted plastic	1	
-10	357	INDICATOR, (M7) four position flap position (A1582) (alternate to SA1104-321 and 2204-321)	1	
	SA1104-321	INDICATOR, (M7) four position flap position (03034) (Lockheed spec dwg 629281-9) (alternate to 2204-321 and 357)	REF	
	2204-321	INDICATOR, M(7) four position flap position (09959) (Lockheed spec dwg 629281-9) (alternate to SA1904-321 and 357)	REF	
-11	358	INDICATOR, (M8) four position flap position (A1582) (alternate to SA1904-321 and 2904-321)	1	
	SA1904-321	INDICATOR, (M8) four position flap position (03034) (Lockheed spec dwg 629281-11) (alternate to 2904-321 and 358)	REF	
	2904-321	INDICATOR, (M8) four position flap position (09959) (Lockheed spec dwg 629281-11) (alternate to SA1904-321 and 358)	REF	
		Attaching Parts		
	AN507B632R4	SCREW (88044)	2	
	NAS43DD1-4	SPACER (80205)	2	
		*		
-12	203-5	TRANSFORMER, (T8) 400 CPS variable (A1620) (05087) (Lockheed spec dwg 617323-5)	1	
-13	SWC10-01	SWITCH, (S33) solenoid held push button lighted (A2829) (alternate to R1759G5)	8	
	R1759G5	SWITCH, (S33) solenoid held push button lighted (00712) (Lockheed spec dwg 613695-5) (alternate to SWC10-01)	REF	
		Partial Breakdown Follows		
	MS25237-327	LAMP (96906)	1	
-14	MS35058-24	SWITCH, (S15) (infrared sight) (96906)	1	
-14A	59-52380-120	LIGHT, (DS108) indicator (87034) (Lockheed spec dwg 740428-103)	2	
	LS9030-327	LAMP, incandescent (blue-white) (36659)	2	
-15	MS35059-21	SWITCH, (S32) (bomb arming nose and tail) (96906) *(see fig. 162)*	1	
-16	797729-1	INSULATOR, electrical paper	1	
-17	MS35058-23	SWITCH (external fuel quantity indicator select) (96906)	1	
-18	MS35059-23	SWITCH, (S54) (bomb automatic-manual release control) (96906) *(see fig. 162)*	1	
-19	75M42	RESISTOR, (R2) wire-wound potentiometer variable 600 Ohms (76241) (Lockheed spec dwg 613520-3)	1 1	
-20	850126-101	SHIM ASSY	1	
-21	FIS107G2	LIGHT ASSY, (DS71) clear shielded post type (A1587) (alternate to A6745CY)	5	
	A6745CY	LIGHT ASSY, (DS71) clear shielded post type (72914) (Lockheed spec dwg 629232-9) (alternate to FIS107G2)	REF	

Instrument Panels

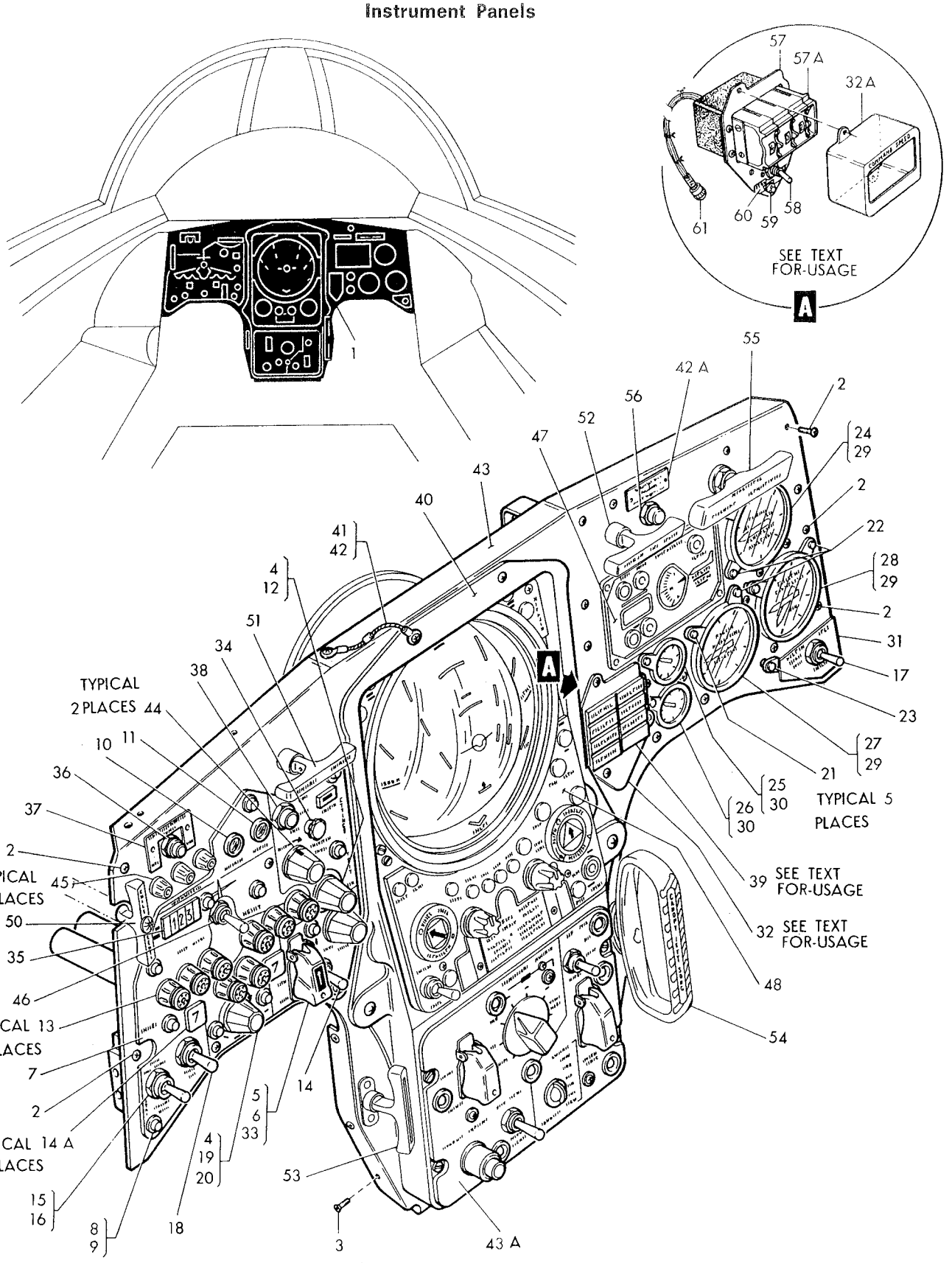

Figure 222-Lower Instrument Panel Components

Figura e particolare	NDR	1	2	3	4	5	6	7	DENOMINAZIONE	Quant.	Codice applicab.
222-22	FIS109G								LIGHT ASSY, (DS72) clear shielded post type (A1587) (alternate to 26410CY)	3	
	26410CY								LIGHT ASSY, (DS72) clear shielded post type (72914) (Lockheed spec dwg 629232-11) (alternate to FIS109G)	REF	
-23	5603MC								BOLT, (DS81) light (07204)	1	
	LS9030-327								LAMP, incandescent (blue-white) (36659)	1	
	LS9030-327								LAMP, incandescent (blue-white) (36659)	8	
-24	2294-45-04								INDICATOR, cabin altitude pressure (A0307) (89944) (Lockheed spec dwg 626135-3) (see T.O. 5F8-20-2-3)	1	
-25	C114606-1								INDICATOR, (M2) type AR2-1 hydraulic pressure (No. 1 system) (A0076) (intchg wth 26806A37H7A3 and SR97J) (see sep pub. whn avail)	1	
	26806A37H7A3								INDICATOR, (M2) type MT1 hydraulic pressure (No. 1 system) (02987) (Lockheed spec dwg 626205-1) (intchg wth SR97J and C114606-1) (see T.O. 5P3-4-70-3)	REF	
	SR97J								INDICATOR, (M2) type MT1 hydraulic pressure (No. 1 system) (61349) (Lockheed spec dwg 626205-1) (intchg wth 26806A37H7A3 and C114606-1) (see sep LR whn avail)	REF	
-26	C114606-2								INDICATOR, (M3) type AR2-2 hydraulic pressure (No. 2 system) (A0076) (intchg wth 26805A37J7A3 and SR97K) (see sep. pub. whn avail)	1	
	26805A37J7A3								INDICATOR, (M3) type MT1 hydraulic pressure (No. 2 system) (02987) (Lockheed spec dwg 626205-3) (intchg wth SR97K and C114606-2 (see T.O. 5P3-4-70-3)	REF	
	SR97K								INDICATOR, (M3) type MT1 hyrdaulic pressure (No. 2 system) (61349) (Lockheed spec dwg 626205-3) (intchg wth 26805A37J7A3 and C114606-2) (see sep LR whn avail)	REF	
-27	JG130A79								INDICATOR, (M5) liquid quantity fuel (A0019) (94580) (Lockheed spec dwg 624383-1) (see LR6-14404-275-4)	1	
-28	JG310B2								INDICATOR, (M6) liquid quantity dual fuel (A0019) (94580) (Lockheed spec dwg 624413-1) (see T.O. 5L6-3-37-4)	1	
-29	MS28042-1A								CLAMP (instrument mounting) (96906)	3	
-30	MS28042-4A								CLAMP (instrument mounting) (96906)	2	
-31	784578-1								NAMEPLATE, dual fuel quantity indicator switch	1	
									Attaching Parts		
	MS21318-2								SCREW (96906)	1	
									*		
-32	851480-101	A.							PLATE, light assy adapter	1	
-32A	851196-101	B.							COVER, preselect control ground speed (NHA 850191-101)	1	
									Attaching Parts		
	NAS601-8								SCREW (80205)	3	
									*		
-33	MS25068-21								SWITCH, (S31) (armament and camera) (96906)	1	
-34	701C427G3								CONTROL, (E99) reticle depression (A0084) (89954) (Lockheed spec dwg 615679-3) (see T.O. 11F13-29-4-3)	1	
									Attaching Parts		
	AN507B832R6								SCREW (88044)	2	
									*		
	788227-3								COUNTER ASSY, ammunition rounds remaining	1	
									Attaching Parts		
	AN507B440R4								SCREW (88044)	4	
									*		
-35	X1784								COUNTER, (M31) ammunition rounds remaining electrical (99479) (Lockheed spec dwg 619401-1) (see sep pub. whn avail)	1	
	789608-1								BRACKET	1	
									Attaching Parts		
	AN507B632R6								SCREW (88044)	3	
									*		
-36	MS35058-27								SWITCH, (S30) (rounds counter reset) (96906)	1	

Figura e particolare	NDR	1	2	3	4	5	6	7	DENOMINAZIONE	Quant.	Codice applicab.
222-37	788504-1								NAMEPLATE, rounds counter	1	
									Attaching Parts		
	AN515B6R6								SCREW (88044)	2	
									———— * ————		
-38	2TL110-1								SWITCH, (S117) sealed lever non-tracking case (normal-off-manual) (91929) (Lockheed spec dwg 613444-11)	1	
	849834-101	A.							HARNESS ASSY, P-174 plug to radar mode lights panel	1	
-39	LAM10-01	A.							LIGHT ASSY, (DS54) multi-unit 2 bank legend indicator (A2829) (alternate to R3073-3) (see sep pub. whn avail)	1	
	R3073-3	A.							LIGHT ASSY, (DS54) multi-unit 2 bank legend indicator (00712) (Lockheed spec dwg 610125-7) (see LR5-14404-390-3) (alternate to LAM10-01)	REF	
									Attaching Parts		
	AN507B632R6	A.							SCREW (88044)	3	
									———— * ————		
-40	762439-9	F.							BEZEL ASSY, radar scope (Modified and reidentified per AA.1F-104-OT-580A) *(see fig. 221)*	1	6701-6815
	762439-101	G.							BEZEL ASSY, radar scope (Supersedes 762439-9 per AA.1F-104-OT-580A) *(see fig. 221)*	1	6816-
									Attaching Parts		
	NAS623-3-2								SCREW (80205)	4	
	AN936A10								WASHER (under head) (88044)	4	
	AN960-10L								WASHER (88044)	4	
									———— * ————		
-41	MS25083-2BB3								JUMPER (96906)	1	
									Attaching Parts		
	AN520-10R8								SCREW (88044)	1	
	AN960-10L								WASHER (88044)	1	
	MS21042L3								NUT (96906)	1	
									———— * ————		
-42	793600-3								SLEEVE, lower instrument panel (jumper)	1	
-42A	852039-101	C.							DECAL, optical test boresight	1	
									Attaching Parts		
	MS21318-2	C.							SCREW (96906)	2	
									———— * ————		
-43	850057-101								PANEL ASSY, lower instrument *(see fig. 221)*	1	
	849905-101								ELECTRICAL INSTL, lower instrument panel *(see fig. 162)*	1	
-43A	849924-101								PANEL ASSY, special weapon control *(see fig. 163 and 223)*	1	6701-6765
	849924-103								PANEL ASSY, special weapon control *(see fig. 163 and 223)*	1	6766-
-44	Q2714								KNOB ASSY, control (04211) *(see fig. 227 for reqd)*	REF	
-45	FI610V								LIGHT, landing gear position indicator (A1587) (alternate to VM300M100) *(see fig. 162 for reqd)*	REF	
	VM300M100								LIGHT, landing gear position indicator (87034) (Lockheed spec dwg 619239-1) (alternate to F1610V) *(see fig. 162 for reqd)*	REF	
-46	22AT2T								SWITCH ASSY, (S34) 8 circuit toggle (91929) (Lockheed spec dwg 613647-3) *(see fig. 162 for reqd)*	REF	
-47	59573-506-1								INDICATOR, (M90) clearance plane and antenna tilt (A0084) (94756) (Lockheed spec dwg 670936-101) (see AA.11-59573-506-4) *(see fig. 157 for reqd)*	REF	6701-6815
	59573-506-511								INDICATOR, (M2002) clearance plane and antenna tilt (A0084) (Aeritalia spec dwg FL6007-101) (see sep. publ. whn avail) *(see fig. 157 for reqd)*	REF	6816-
									Attaching Parts		
	AN515B6R8								SCREW (88044)	4	
	MS33737-9								NUT (96906)	4	
									———— * ————		
	LS9030-327								LAMP, incandescent (blue-white) (36659)	5	
-48	59567-506-1								INDICATOR, (M89) direct view radar (A0084) (94756) (Lockheed spec dwg 670931-101) (see AA.11-59567-506-4) *(see fig. 157 for reqd)*	REF	6701-6815
	59567-506-511								INDICATOR, (M2003) direct view radar (A0084) (Aeritalia spec dwg FL6005-101) (see sep. publ. whn avail) *(see fig. 157 for reqd)*	REF	6816-

Figura e particolare	NDR	1	2	3	4	5	6	7	DENOMINAZIONE	Quant.	Codice applicab.
									Attaching Parts		
222	NAS623-3-4								SCREW (80205)	4	
	AN960-10L								WASHER (88044)	4	
-50	726951-1								HANDLE ASSY, drag chute release *(see fig. 90 for reqd)*	REF	
-51	726336-3								HANDLE, manual landing gear release *(see fig. 85 for reqd)*	REF	
-52	726336-4								HANDLE, manual ram air turbine *(see fig. 89 for reqd)*	REF	
-53	726207-101								HANDLE, rudder pedal adjustment *(see fig. 64 for reqd)*	REF	
-54	785800-101	D.							HANDLE, canopy jettison (Reworked and reidentified as 846106-103 per CA11F-104G-149) *(see fig. 211 for reqd)*	REF	6701-6720
	846106-103	E.							HANDLE, canopy jettison *(see fig. 211 for reqd)*	REF	6721-
-55	21426-4630								PUSH PULL ASSY, 4 inch travel positive position (78710) *(see fig. 95 for reqd)*	REF	
	849684-101								HARNESS ASSY, lower instrument panel *(see fig. 162 for reqd)*	REF	
-56	W302WGU	C.							SWITCH, test optical bore sight (99707)	1	
	851481-101	B.							SWITCH ASSY, ground speed preselect control (NHA 850191-101)	1	
-57	852017-101	B.							PLATE, grd speed preselect control adapter	1	
-57A	7L8	B.							SWITCH, (S173) resistance divider thumb wheel (07126) (Lockheed spec dwg 740424-101)	1	
									Attaching Parts		
	AN507B632R6	B.							SCREW (88044)	3	
	MS21042L06	B.							NUT (96906)	3	
	MS24515-718	B.							LAMP, sub miniature (96906)	3	
-58	6AT28	B.							SWITCH, (S129) toggle (91929) (Lockheed spec dwg 613569-1)	1	
-59	FIS107G2	B.							LIGHT ASSY, (DS71) clear shielded pont type (A1587) (Alternate to A6745CY)	1	
	A6745CY	B.							LIGHT ASSY, (DS71) clear shielded pont type (72914) (Lockheed spec dwg 629232-9) (alternate to FIS107G2)	1	
	LS9030-327	B.							LAMP, incandescent (blue-white) (36659)	1	
-60	851483-103	B.							DECAL, ground speed preselect control switch	1	
	849833-101	B.							HARNESS ASSY, P174 plug to ground speed control panel	1	6701-6765
	853069-101	B.							HARNESS ASSY, P174 plug to ground speed control panel	1	6766-
-61	MS3116P16-26P	B.							CONNECTOR, plug (P174 disc.)	1	

A - Only for AVX
B - Only for FB
C - Reqd per AA.1F-104S-OT-122
D - Removed per CA.11F-104G-149
E - Reqd per CA.11F-104G-149
F - Removed per AA.1F-104-OT-580A
G - Reqd per AA.1F-104-OT-580A

Figura e particolare	NDR	1 2 3 4 5 6 7 DENOMINAZIONE	Quant.	Codice applicab.
		SPECIAL WEAPON CONTROL PANEL		
223	849924-101	. PANEL ASSY, special weapon control *(see fig. 222 for reqd)*	REF	6701-6765
	849924-103	. PANEL ASSY, special weapon control *(see fig. 222 for reqd)*	REF	6766-
		Attaching Parts		
	PF3 1-2 38	. STUD (72794)	4	
	PS3 1-2	. SPRING (72794)	4	
	PC3 1-2	. CUP (72794)	4	
		*		
- 1	849928-101	. . BOX, special weapon control cover	1	6701-6795
	849928-103	. . BOX, special weapon control cover	1	6796-
		Attaching Parts		
	AN507-832R6	. . SCREW (88044)	2	
		*		
- 2	6AT28	. . SWITCH, (S129) toggle (91929) (Lockheed spec dwg 613569-1) . . .	1	
- 3	52053-7	. . KNOB, plastic (04211)	1	
- 4	1941-3	. . SWITCH, (S28) rotary selector (pylon) (91812) (Lockheed spec dwg 613674-3)	1	
- 5	8906K1032	. . SWITCH, (S70) toggle (15605) (Lockheed spec dwg 740020-1) . . .	2	
- 6	MS25224-1	. . GUARD (96906)	2	
- 7	MS25068-23	. . SWITCH, (S26) 4 pole toggle (96906)	1	
- 8	795234-1	. . GUARD	1	
- 9	A4-1085	. . SWITCH, (S164) push (emergency jettison (81640)	1	
-10	1941-7	. . SWITCH, (S168) rotary selector (91812) (Lockheed spec dwg 613674-7) .	1	
-11	Q2714	. . KNOB ASSY, control (04211)	1	
-12	849927-101	. . PANEL, special weapon control and AIM-7N	1	
		Attaching Parts		
-13	NAS601-8P	. . SCREW (80205)	1	
-14	MS35265-30	. . SCREW (96906)	2	
-15	LS4446-6	. . WASHER, synthetic rubber (36659)	3	
		*		
		Partial Breakdown Follows		
-16	LS9093B3	. . . LIGHT ASSY, edge lighted panel (36659)	7	
-17	LS9030-327	. . . LAMP, incandescent (blue-white) (36659)	7	
-18	849926-101	. . PANEL, plastic edge lighted special weapon control and AIM-7N . .	1	
-18A	FL0894-103	A. . DECAL, drop lock (A0019)	1	6701-6815
	849925-101	. . PANEL ASSY, special weapon control	1	
-19	849929-101	. . . PANEL MOUNTING	1	
	849721-101	. . HARNESS ASSY, special weapon and sight panel	1	6701-6765
	852132-101	. . HARNESS ASSY, special weapon and sight panel	1	6766-
	786134-7	. . . RECEPTACLE ASSY, special weapon control	1	
-20	EMRA42PF2116	. . . . CONNECTOR, (J299) receptacle (special weapon control panel P-20 disc) (81312)	1	
		Attaching Parts		
	AN515-6R6	. . SCREW (88044) (J299)	4	
		*		
	AN960D6	. . WASHER (88044)	1	
-21	849930-101	. . DECAL, special weapon and AIM-7E control panel wiring	1	6701-6765
	852131-101	. DECAL, special weapon and AIM-7E control panel wiring	1	6766-

A - Reqd per AA.1F-104S-OT-173

Instrument panels

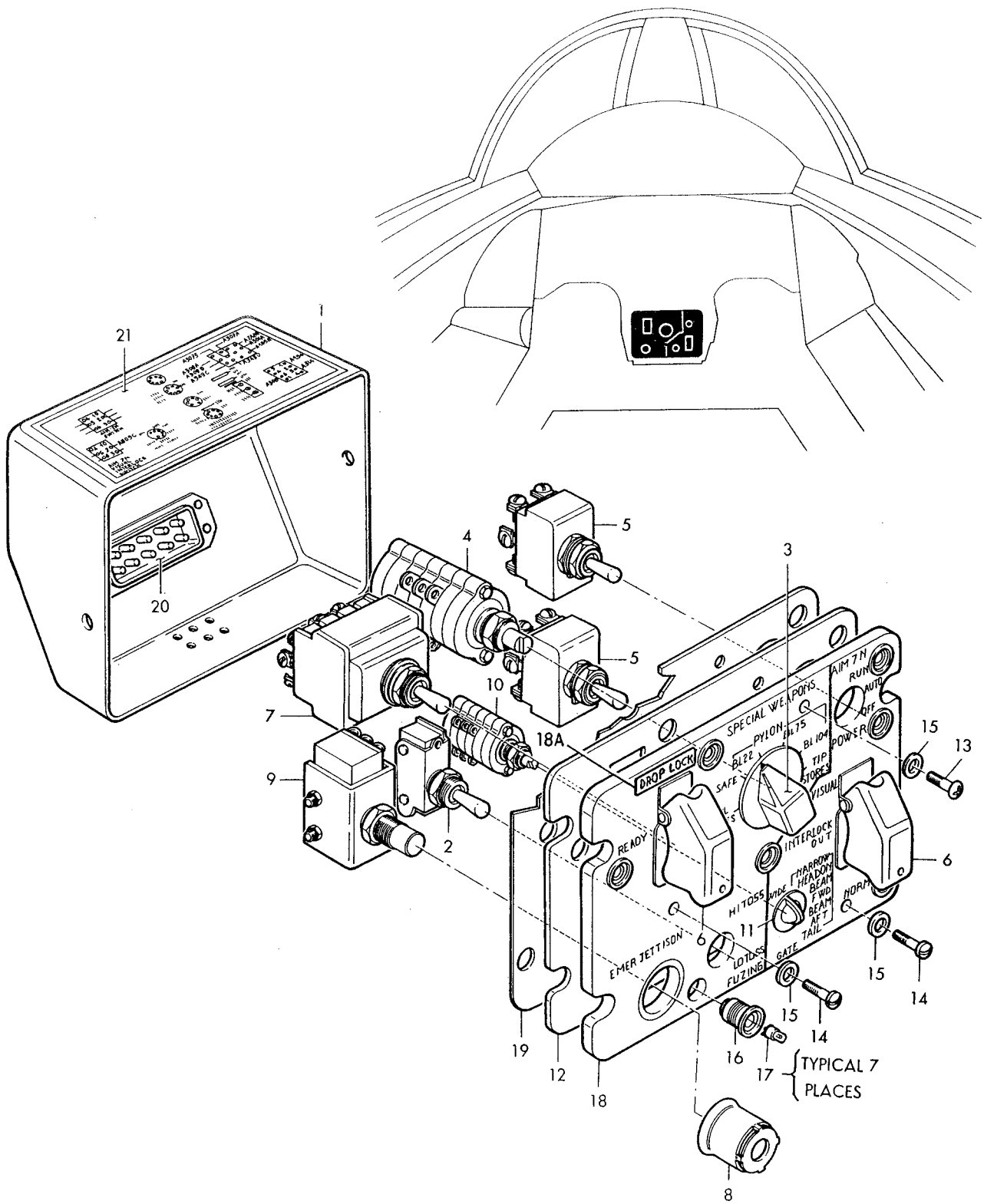

Figure 223–Special Weapon Control Panel

Figura e particolare	NDR	1	2	3	4	5	6	7	DENOMINAZIONE	Quant.	Codice applicab.
									RIGHT HAND SUB INSTRUMENT PANEL		
224- 1	849933-103			.					PANEL ASSY, RH sub *(see fig. 160 for reqd)*	REF	6701-6765
	849933-105			.					PANEL ASSY, RH sub *(see fig. 160 for reqd)*	REF	6766-6815
	849933-107			.					PANEL ASSY, RH sub *(see fig. 160 for reqd)*	1	6816-
									Attaching Parts		
- 2	2600-4			.					STUD, camloc (71286)	4	
- 3	2600-6			.					STUD, camloc (71286)	1	
									*		
- 4	CPC3612-3			.	.				KNOB (canopy defogger) (96655)	1	
- 5	MS35058-27			.	.				SWITCH, (S30) (gen No. 1 and gen No. 2 on and off reset) (96906)	2	
- 6	MS25225-1		C.	.	.				GUARD (switch) (96906)	2	6701-6815
	FL0868-101		D.	.	.				GUARD (switch) (A0019)	2	
- 7	793477-3			.	.				PANEL ASSY, plastic edge lighted	1	
									Attaching Parts		
- 8	AN515B6R8			.	.				SCREW (88044)	2	
- 9	LS4446-6			.	.				WASHER, synthetic rubber (36659)	2	
									*		
	115HGC			.	.	.			LIGHT ASSY, edge lighted panel (04211)	1	
	103C			.	.	.			LIGHT ASSY, edge lighted panel (04211)	4	
-10	103-3			.	.	.	.		CAP ASSY, edge lighted panel (04211)	1	
-11	LS9030-327			.	.				LAMP, incandescent (blue-white) (36659)	5	
-12	MS25068-27			.	.				SWITCH, (S36) (fuel quantity warning light test) (96906)	1	
-13	MS35059-23			.	.				SWITCH, (S54) (storm light) (96906)	1	
-14	AG745C24			.	.				LIGHT ASSY, (DS107) clear shielded post type (72914) (Lockheed spec dwg 629232-4)	1	
	LS9030-327			.	.				LAMP, incandescent (blue-white) (36659)	1	
-15	849935-101			.	.				DECAL, storm lights	1	
-16	FIS107G2			.	.				LIGHT ASSY, (DS71) clear shielded post type (A1589) (alternate to A6745CY)	2	
	A6745CY			.	.				LIGHT ASSY, (DS71) clear shielded post type (72914) (Lockheed spec dwg 629232-9) (alternate to FIS107G2)	REF	
	LS9030-327			.	.				LAMP. incandescent (blue-white) (36659)	2	
-17	29312-2LJ3			.	.				GAGE, (M112) liquid oxygen (A1996) (99251) (Lockheed spec dwg 654167-9) (see LR5-14404-399-4)	1	
									Attaching Parts		
	MS28042-1A			.	.				CLAMP, aircraft instrument mounting (96906)	1	
	NAS43DD3-4			.	.				SPACER (80205)	1	
									*		
-18	MDS10-01		A.	.					PANEL ASSY, (DS105) annunciator integrated caution light (A2829) (Modified and reidentified to MDS10-01A per AA.1F-104-OT-704A) (see sep. publ. whn avail.)	1	6701-6765
-18A	MDS10-01A		B.	.					PANEL ASSY, (DS2001) annunciator integrated caution light (A2829) (Supersedes MDS10-01 per AA.1F-104-OT-704A) (see sep. pub. whn avail)	1	6766-
									Attaching Parts		
	AN507-632R4			.	.				SCREW (88044)	4	
									*		
									Partial Breakdown Follows		
	MS25237-327			.	.	.			LAMP (96906)	32	
-19	WC1659-431			.	.				SWITCH, (S78) push button (81640) (Lockheed spec dwg 612703-15)	1	
-19A	SS48172K2220		E.	.	.				PLUG, button (61864)	1	6701-6765
-20	MS25041-7		F.	.					LIGHT, (DS102) indicator (fuel shut-off open valve test) button (96906)	1	
	LS9030-327		F.	.					LAMP, incandescent (blue-white) (36659)	1	
-20A	852097-101		F.	.					DECAL, fuel shut-off open valve test light	1	
-21	MS35059-23			.	.				SWITCH, (S54) (extra timer) (96906)	1	
-22	852043-101			.	.				DECAL, extra timer	1	
-23	849934-101			.	.				PANEL, RH sub panel mounting	1	6701-6765
-23A	849934-105			.	.				PANEL, RH sub panel mounting	1	6766-
	849505-101			.	.				HARNESS ASSY, RH sub panel *(see fig. 160)*	1	6701-6765
	852138-101			.	.				HARNESS ASSY, RH sub panel *(see fig. 160)*	1	6766-
-24	DM9700-27P004			.	.	.			CONNECTOR, (P78) plug (P-111 disc. RH sub panel) (17419)	1	
-25	NAS1096-3-12			.	.				SCREW (grd stud) (80205)	1	

Instrument Panels

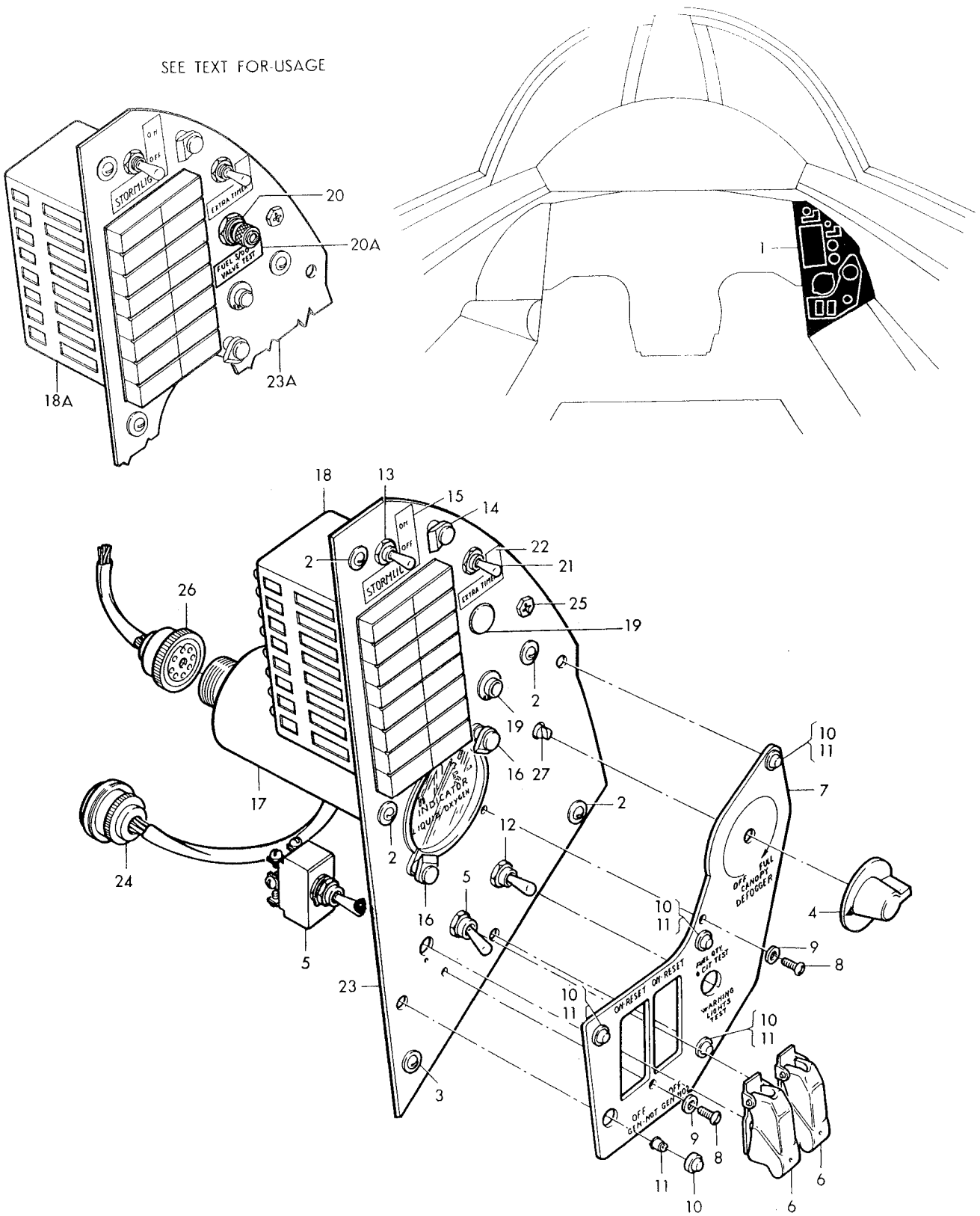

Figure 224-Right Hand Sub-Instrument Panel

Figura e particolare	NDR	DENOMINAZIONE 1 2 3 4 5 6 7	Quant.	Codice applicab.
224	AN936A10	. . WASHER (grd stud) (88044)	1	
	AN935-10L	. . WASHER (grd stud) (88044)	1	
	AN345-10	. . NUT (grd stud) (88044)	1	
	AN960-10	. . WASHER (grd stud) (88044)	1	
	MS21042L3	. . NUT (grd stud) (96906)	1	
	849696-101	. HARNESS ASSY, liquid oxygen quantity indicator to bulkhead disc. *(see fig. 160 for reqd)*	REF	
-26	165-61	. . CONNECTOR, (P85) plug (liquid oxygen quantity indicator) (02660)	1	
-27	106762-1	. CONTROLLER, pilot's defogger (A0076) (70210) (Lockheed spec dwg 644876-1) (see T.O. 15A8-5-25-3) *(see fig. 141 for reqd)*	REF	

A - Removed per AA.1F-104-OT-704A
B - Reqd per AA.1F-104-OT-704A
C - Removed per AA.1F-104-OT-163
D - Reqd per AA.1F-104-OT-163
E - Removed per AA.1F-104-OT-732B
F - Reqd per AA.1F-104-OT-732B

Figura e particolare	NDR	DENOMINAZIONE	Quant.	Codice applicab.
		ARMAMENT/FUEL COMPARTMENT DOORS		
225	772476-101	DOOR INSTL, aft armament compartment (NHA 849141-101)	1	6701-6815
	772476-105	DOOR INSTL, aft armament compartment (NHA 849141-101)	1	6816-
-1	764379	LOCK, door hinge pin	1	
		Attaching Parts		
-2	NAS1203-3	SCREW (80205)	2	
	AN960D10	WASHER (88044)	2	
	MS21042L3	NUT (96906)	2	
-3	760698-12	HINGE PIN, door	1	
-4	772476-103	DOOR ASSY, aft armament compartment	1	6701-6815
	772476-107	DOOR ASSY, aft armament compartment	1	6816-
-5	764507	HINGE, aft door	1	
-5A	850543-101	CHANNEL, aft gun bay door	1	6701-6810
	850543-103	CHANNEL, aft gun bay door	1	6811-
-6	760698-9	RETAINER, door seal forward and aft	2	
-7	760698-10	RETAINER, door seal upper	1	
-8	760698-11	RETAINER, door seal upper	1	
-9	174698-11	SEAL, armament compartment door	AR	
		Attaching Parts		
	NAS517-2-2	SCREW (80205)	34	
	MS21042L08	NUT (96906)	34	
-10	762061	NAMEPLATE, identification and modification	1	
-11	851625-101	NAMEPLATE, boresight chart	1	
	852051-101	STRAP, AIM-7E grd pwr test sw	1	
-12	760703	BLOCK, door latch	2	
		Attaching Parts		
-13	NAS1203-4	SCREW (80205)	2	
	AN960D10	WASHER (88044)	2	
	MS21042L3	NUT (96906)	2	
-14	MS20392-1C13	PIN, flathead (96906)	2	
-15	208636	ROD END, latching mechanism	2	
-16	AN316-4R	NUT (88044)	2	
-17	760702	TUBE ASSY, door latch	1	
-18	450380L	BLOCK ASSY, door	2	
-19	MS20392-2C33	PIN, flathead (96906)	1	
-20	209319	ROLLER, latching mechanism	1	
-21	760699-601	LATCH ASSY, armament compartment aft door	1	
-22	209316	RETAINER, door latch spring	1	
		Attaching Parts		
-23	NAS221-12	SCREW (80205)	2	
	MS21042L3	NUT (96906)	2	
-24	208653	SPRING, door latch mechanism	1	
-25	MS21042L3	NUT (96906)	1	
-26	LS1785-416	WASHER, plain (36659)	1	
-27	209323	RETAINER, door handle	1	
-28	208658	BUSHING, door latch	2	
-29	208659	BEARING, door latch	2	
-30	208656	GEAR, door latch	1	
-31	760700	HOUSING, armament compartment aft door latch	1	
	MS24665-151	COTTER PIN (96906)	1	
-32	AN960D6	WASHER (88044)	1	
-33	800771-1	SPRING, door latch	1	
-34	MS20392-1C37	PIN, flathead (96906)	1	
-35	760701	CATCH, door latch	1	
-36	771712-1	HANDLE ASSY, door	1	
-37	NAS561P6-14	ROLLPIN (80205)	1	

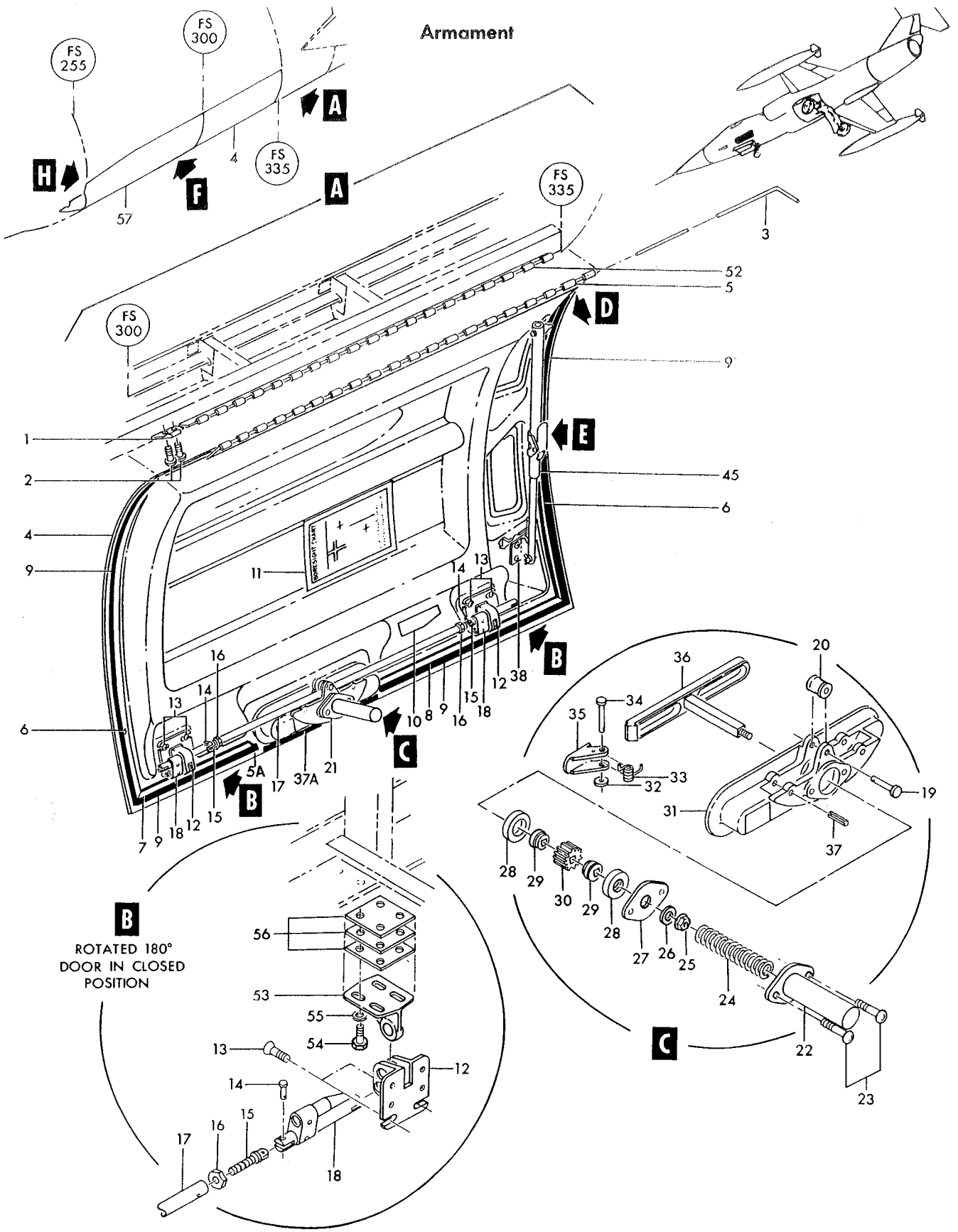

Figure 2-25— Armament/Fuel Compartment Doors (Sheet 1 of 2)

Armament

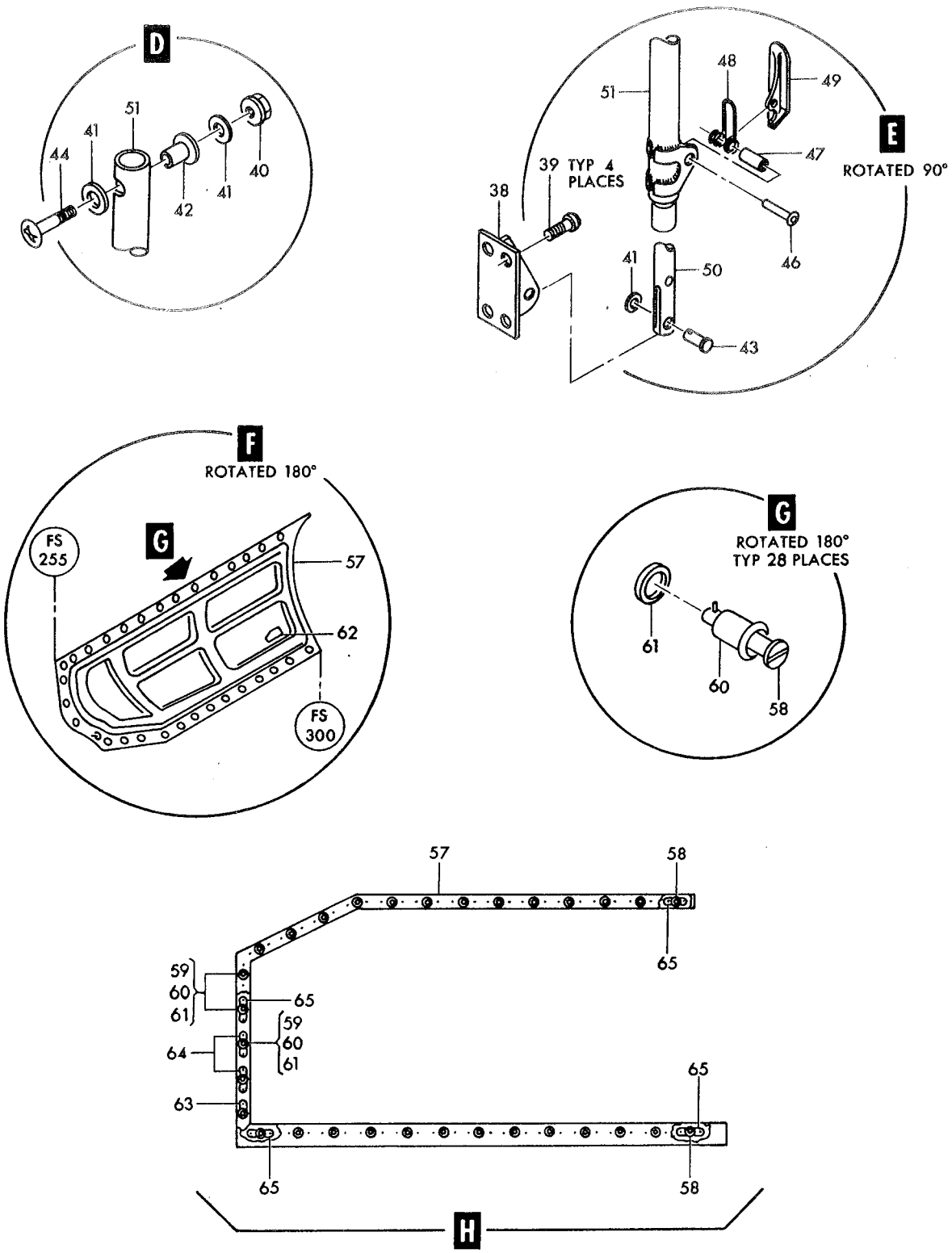

Figure 225— Armament / Fuel Compartment Doors (Sheet 2 of 2)

Figura e particolare	NDR	DENOMINAZIONE	Quant.	Codice applicab.
225-37A	772476-113	A. SEAL, armament compartment aft door	1	
-38	763510	BRACKET, armament compartment door	1	
		Attaching Parts		
-39	NAS623-3-2	SCREW (80205)	4	
		☼		
	MS24665-132	COTTER PIN (96906)	1	
-40	MS21042L3	NUT (96906)	1	
-41	AN960-10	WASHER (88044)	3	
-42	762064	FITTING, armament compartment door	1	
-43	MS20392-2C17	PIN, flathead (96906)	1	
-44	NAS623-3-14	SCREW (80205)	1	
-45	761983-3	PROP ASSY, armament compartment door	1	
-46	LS1121-4-27	RIVET, semi-tubular (36659)	1	
-47	762068	SPACER, prop	1	
-48	762065	SPRING, prop	1	
-49	761984	TRIGGER, prop	1	
-50	761980-3	TUBE, armament compartment cover prop	1	
-51	761981-6	TUBE ASSY, armament compartment cover	1	
	777169-503	FORMER INSTL, armament compartment door *(see fig. 38 for reqd)*	REF	
-52	764508	HINGE, aft door	1	
	760158-18	FITTING INSTL, armament compartment door *(see fig. 38 for reqd)*	REF	
-53	760161	FITTING, armament door latch	2	
		Attaching Parts		
-54	AN4-6A	BOLT (88044)	4	
-55	AN960-516	WASHER (88044)	4	
		☼		
-56	760162	SHIM, door fitting	6	
	772475-1	DOOR INSTL, forward armament compartment (NHA 849141-101)	1	
-57	772475-3	DOOR ASSY, armament compartment forward	1	
		Attaching Parts		
-58	4002-3	STUD ASSY, slotted head (71286)	28	
-59	4002-5	STUD ASSY, slotted head (71286)	3	
-60	4002G	GROMMET, camloc stud (71286)	31	
-61	R4G	SNAP RING, grommet retainer (71286)	31	
		☼		
-62	762061	NAMEPLATE, identification and modification	1	
	760158-19	RECEPTACLE INSTL, door attachment armament compartment (NHA 849141-101)	1	
-63	KM786-16N35CV	RECEPTACLE, camloc fastener (71286)	1	
-64	KM786-16N70CC	RECEPTACLE, camloc fastener (71286)	2	
-65	214-16N	RECEPTACLE, camloc fastener (71286)	28	

A - Reqd per AA.1F-104S-OT-157

Figura e particolare	NDR	1 2 3 4 5 6 7	DENOMINAZIONE	Quant.	Codice applicab.
			BLAST TUBE, FIXED MOUNTS AND BORESIGHT		
226	778772-1	.	SHROUD INSTL, blast tube bleed (LH only) *(see fig. 30 for reqd)*	REF	
- 1	778772-3	. .	SHROUD ASSY, blast tube	1	
			Attaching Parts		
- 2	NAS623-3-1	. .	SCREW (80205)	10	
- 3	NAS623-3-2	. .	SCREW (80205)	25	
- 4	NAS623-3-3	. .	SCREW (80205)	3	
- 4B	NAS1103-3	. .	SCREW (80205)	1	
	AN960D10	. .	WASHER (88044)	4	
	AN960C10L	. .	WASHER (88044)	35	
	778775-1	B.	TUBE INSTL, blast (LH only) *(see fig. 30 for reqd)*	REF	
- 5	4366-500M	B. .	COUPLING, channel band (98625)	1	
- 6	778775-3	B. .	TUBE ASSY, complete blast	1	
			Attaching Parts		
- 7	NAS1203-4	B. .	SCREW (80205)	8	
- 8	NAS1203-2	B. .	SCREW (80205)	46	
- 9	NAS1203-3	B. .	SCREW (80205)	5	
-10	LS9336-16	B. .	GASKET, high pressure high temperature (36659)	1	
-11	773395-3	B. .	RING ASSY, fus sta 244 to 249 blast tube universal joint	1	
			Attaching Parts		
	NAS623-3-2	B. .	SCREW (80205)	2	
	AN960-10	B. .	WASHER (88044)	2	
	MS21042L3	B. .	NUT (96906)	2	
-11A	773395-7	B. . .	TUBE, fus sta 244 to 249 *(see fig. 147)*	1	
-12	MS21042L5	C. .	NUT (96906)	3	
-13	728047-1	C. .	WASHER, gun stabilizer	6	
-14	AN5-16	C. .	BOLT (88044)	3	
-15	778746-1	C. .	TUBE ASSY, gun exhaust	1	
			Attaching Parts		
-16	AN4-5A	B. .	BOLT (88044)	4	
-17	AN4-7A	B. .	BOLT (88044)	4	
-18	AN3-4A	B. .	BOLT (88044)	12	
-19	778804-1	B. .	SPACER, blast tube structure	1	
-20	751233-1	B. .	RING, sealing blast tube stabilizer joint	1	
-21	728045-1	B. .	WASHER, blast tube stabilizer sealing ring	1	
-22	5440-5-10BR	B. .	PIN (84256)	3	
-23	778777-3	B. .	RING ASSY, muzzle harmonizing	1	6701-6865
	778777-101	B. .	RING ASSY, muzzle harmonizing	1	6866-
-24	BRE5240L	B. .	ROD END (81376)	3	
-25	770518-1	B. .	TURNBUCKLE, gun barrel stabilizer	1	
-26	770518-3	B. .	TURNBUCKLE, gun barrel stabilizer	1	
-27	770518-5	B. .	TURNBUCKLE, gun barrel stabilizer	1	
-28	MS20005-8	B. .	BOLT (96906)	1	
-29	MS20002C5	B. .	WASHER (96906)	1	
-30	770519-1	B. .	FORK ASSY, gun stabilizer	1	
-31	MS20005-16	B. .	BOLT (96906)	1	
-32	MS20002C5	B. .	WASHER (96906)	1	
-33	770519-3	B. .	FORK, gun stabilizer	1	
-34	778778-1	B. .	FORK ASSY, gun stabilizer	1	
-34A	773471-3	.	TUBE, gun purge air supply *(see fig. 147 for reqd)*	REF	
	785041-1	B.	STRUCTURE INSTL, blast tube bleed (LH only) *(see fig. 30 for reqd)*	REF	
	785041-101	A.	STRUCTURE INSTL, blast tube bleed (LH only) *(see fig. 30 for reqd)*	REF	
-35	785044-1	B. .	CHANNEL ASSY, blast tube bleed structure	1	
			Attaching Parts		
	NAS623-3-2	B. .	SCREW (80205)	10	

Armament

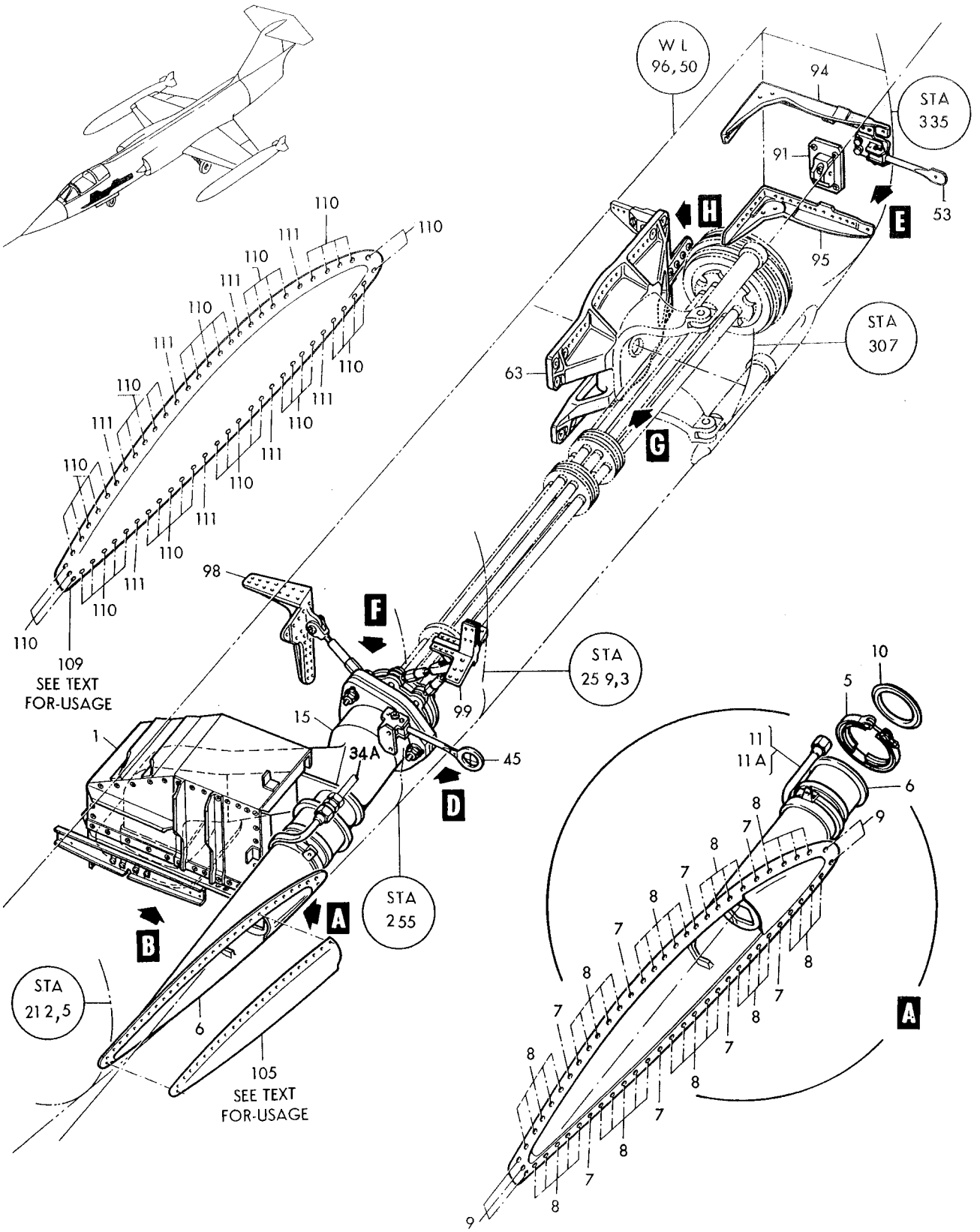

Figure 226–Blast Tube, Fixed Mounts and Boresight (Sheet 1 of 3)

Armament

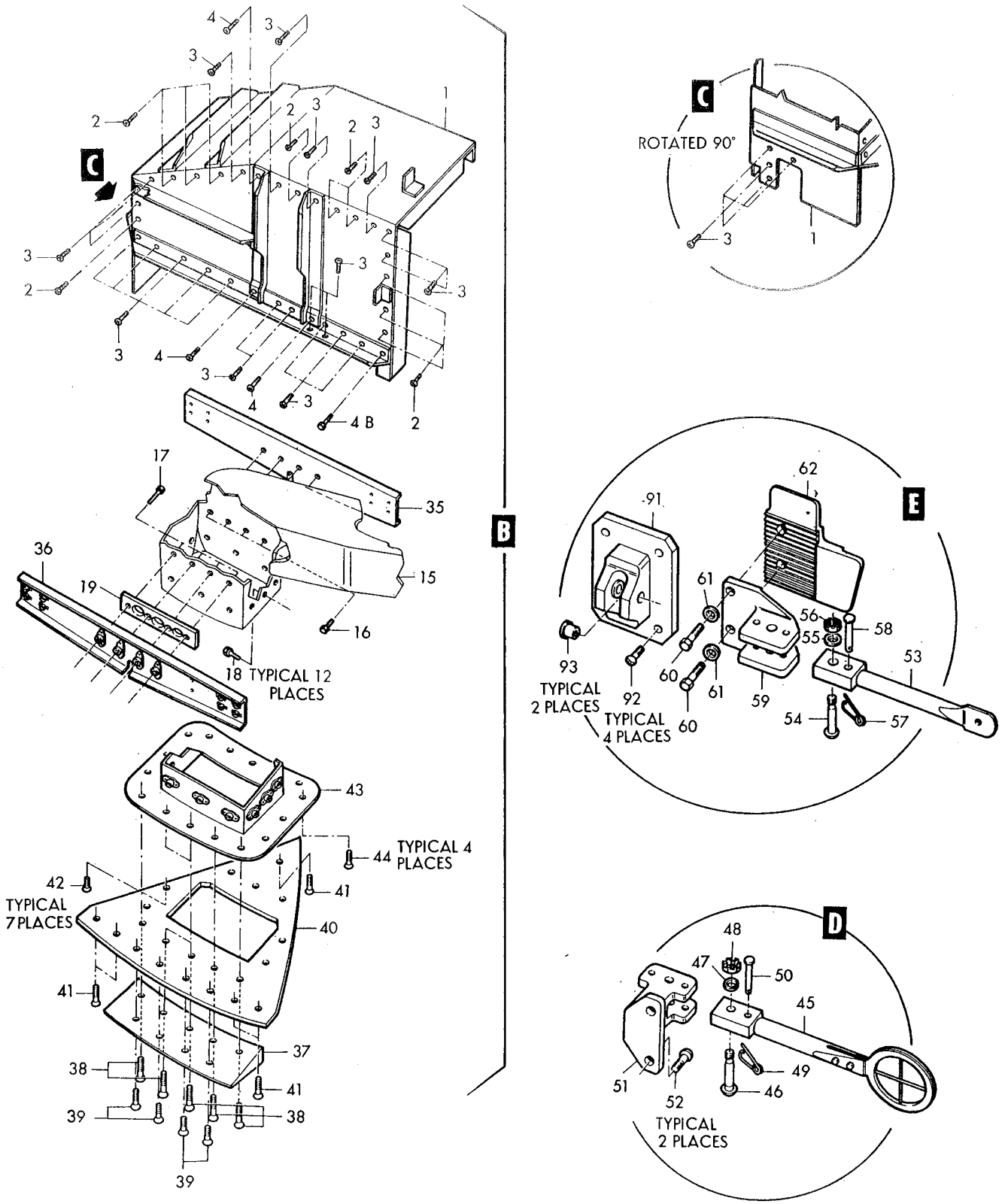

Figure 226–Blast Tube, Fixed Mounts and Boresight (Sheet 2 of 3)

Armament

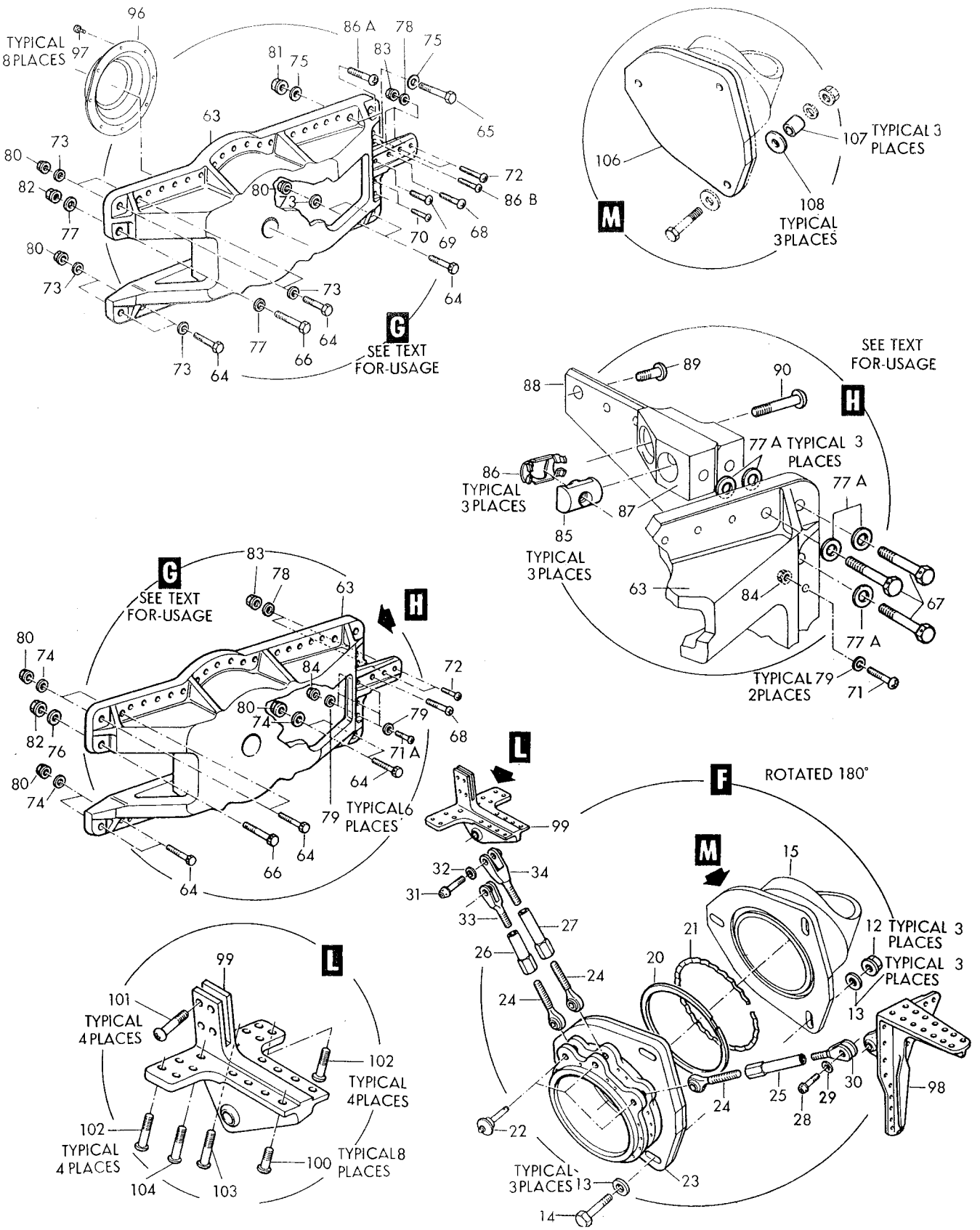

Figure 226–Blast Tube, Fixed Mounts and Boresight (Sheet 3 of 3)

Figura e particolare	NDR	1 2 3 4 5 6 7	DENOMINAZIONE	Quant.	Codice applicab.
226-36	785045-1	. .	CHANNEL ASSY, blast tube bleed	1	
			Attaching Parts		
	NAS623-3-2	. .	SCREW (80205)	8	
			*		
-37	778751-1	. .	FAIRING, blast tube bleed structure	1	
			Attaching Parts		
-38	NAS517-3-11	. .	SCREW (80205)	5	
-39	NAS517-3-8	. .	SCREW (80205)	4	
			*		
-40	778753-3	. .	FAIRING, blast tube bleed	1	
			Attaching Parts		
-41	NAS517-3-6	. .	SCREW (80205)	5	
-42	NAS517-3-4	. .	SCREW (80205)	7	
			*		
-43	778747-1	B. .	FLANGE ASSY, blast tube bleed structure	1	
	778747-101	A. .	FLANGE ASSY, blast tube bleed structure	1	
			Attaching Parts		
-44	NAS517-3-2	. .	SCREW (80205)	4	
			*		
	761560	.	FIXTURE INSTL, boresight target aligning (LH only) *(see fig. 30 for reqd)*	REF	
-45	771706-1	. .	SIGHT ASSY, forward boresight target alignment	1	
			Attaching Parts		
-46	AN23-17	. .	BOLT (88044)	1	
-47	AN960-10	. .	WASHER (88044)	1	
-48	AN320-3	. .	NUT (88044)	1	
			*		
-49	AN416-2	. .	PIN (88044)	1	
-50	MS20392-1C25	. .	PIN (96906)	1	
	MS24665-132	. .	COTTER PIN (96906)	1	
-51	761501	. .	FITTING, forward boresight target alignment	1	
			Attaching Parts		
-52	NAS221-11	. .	SCREW (80205)	2	
	AN960D10	. .	WASHER (88044)	2	
	MS21042L3	. .	NUT (96906)	2	
			*		
-53	761503	. .	SIGHT, aft boresight target alignment	1	
			Attaching Parts		
-54	AN23-17	. .	BOLT (88044)	1	
-55	AN960-10	. .	WASHER (88044)	1	
-56	AN320-3	. .	NUT (88044)	1	
-57	AN416-2	. .	PIN (88044)	1	
-58	MS20392-1C25	. .	PIN (96906)	1	
	MS24665-132	. .	COTTER PIN (96906)	1	
			*		
-59	761500	. .	FITTING, aft boresight target alignment	1	
			Attaching Parts		
-60	AN4-6A	. .	BOLT (88044)	2	
-61	726021-3	. .	WASHER, aft boresight target alignment sight	2	
			*		
-62	771705-1	. .	PLATE ASSY, aft boresight target alignment	1	
	764650-501	B.	FITTING INSTL, forward gun mount base (LH only) *(see fig. 30 for reqd)*	REF	
	764650-103	A.	FITTING INSTL, forward gun mount base (LH only) *(see fig. 30 for reqd)*	REF	
-63	766913-1	. .	FITTING, forward gun mount attachment	1	
			Attaching Parts		
-64	AN174H10A	. .	BOLT (88044)	6	
-65	AN174H10A	A. .	BOLT (88044)	2	
-66	AN175H10	. .	BOLT (88044)	1	
-67	AN174H15A	B. .	BOLT (88044)	3	
-68	NAS623-4-10	. .	SCREW (80205)	1	
-69	NAS623-3-9	A. .	SCREW (80205)	1	

Figura e particolare	NDR	1 2 3 4 5 6 7	DENOMINAZIONE	Quant.	Codice applicab.
226-70	NAS623-3-7	A. .	SCREW (80205)	2	
-71	NAS623-4-8	B. .	SCREW (80205)	1	
-71A	NAS623-4-6	B. .	SCREW (80205)	3	
-72	NAS623-3-8	. .	SCREW (80205)	2	
-73	AN960D416	A. .	WASHER (88044)	10	
-74	AN960D416	B. .	WASHER (88044)	6	
-75	AN960D416	A. .	WASHER (88044)	4	
-76	AN960D516	B. .	WASHER (88044)	1	
-77	AN960D516	A. .	WASHER (88044)	2	
-77A	AN960D516	B. .	WASHER (88044)	6	
-78	AN960D10	. .	WASHER (88044)	2	
-79	AN960D416	B. .	WASHER (88044)	8	
-80	MS21042L4	. .	NUT (96906)	6	
-81	MS21042L4	A. .	NUT (96906)	2	
-82	MS21042L5	. .	NUT (96906)	1	
-83	MS21042L3	. .	NUT (96906)	2	
-84	MS21042L4	B. .	NUT (96906)	4	
-85	2752-048	B. .	NUT, barre self-locking (72962)	3	
-86	LS4893-4	B. .	RETAINER, barrel nut (36659)	3	
-86A	NAS623-4-18	A.	SCREW (80205) *(see fig. 230 for reqd)*	REF	
-86B	NAS623-3-18	A.	SCREW (80205) *(see fig. 230 for reqd)*	REF	
			——————✲——————		
-87	764557-1	B.	FITTING, fus sta 315 short LH *(see fig. 30 for reqd)*	REF	
-88	764558	B.	FITTING, fus sta 315 long LH *(see fig. 30 for reqd)*	REF	
			Attaching Parts		
-89	NAS623-4-6	B.	SCREW (80205)	1	
-90	NAS623-4-16	B.	SCREW (80205)	1	
	ALPPHT6-6	B.	LOCKBOLT, pull type (29666)	2	
	LCC6	B.	COLLAR, lockbolt (29666)	2	
	AN960D416	B.	WASHER (88044)	2	
	MS21042L4	B.	NUT (96906)	2	
			——————✲——————		
	760094	.	MOUNT INSTL, aft gun (LH only) *(see fig. 30 for reqd)*	REF	
-91	764373	. .	FITTING ASSY, aft gun mount attaching *(see fig. 228)*	1	
			Attaching Parts		
-92	NAS221-14	. .	SCREW (80205)	4	
	AN960-10L	. .	WASHER (88044)	4	
	MS21042L3	. .	NUT (96906)	4	
			——————✲——————		
-93	LS3859F4-11	. . .	BUSHING, flanged plain (36659)	2	
-94	764216	. .	FITTING, upper aft gun mount	1	
			Attaching Parts		
	NAS221-11	. .	SCREW (80205)	7	
	MS21042L3	. .	NUT (96906)	7	
			——————✲——————		
-95	760096	. .	FITTING, lower aft gun mount	1	
			Attaching Parts		
	NAS221-11	. .	SCREW (80205)	6	
	MS21042L3	. .	NUT (96906)	6	
			——————✲——————		
-96	764591	.	COVER, aft gun mount attachment (LH) *(see fig. 38 for reqd)*	REF	
			Attaching Parts		
-97	NAS623-3-2	.	SCREW (80205)	8	
			——————✲——————		
	769859-501	.	FITTING INSTL, barrel stabilizer support (LH only) *(see fig. 30 for reqd)*	REF	
-98	784465-1	. .	FITTING ASSY, barrel stabilizer	1	
			Attaching Parts		
	NAS623-3-4	. .	SCREW (80205)	7	
	AN960-10L	. .	WASHER (88044)	7	
	MS21042L3	. .	NUT (96906)	7	
			——————✲——————		

Figura e particolare	NDR	1	2	3	4	5	6	7	DENOMINAZIONE	Quant.	Codice applicab.
226	769859-3			SUPPORT ASSY, barrel stabilizer						1	
-99	769711-1				FITTING ASSY, barrel stabilizer fork rod					1	
									Attaching Parts		
-100	NAS623-3-4				SCREW (80205)					8	
-101	NAS623-3-6				SCREW (80205)					4	
-102	NAS623-3-10				SCREW (80205)					8	
-103	NAS623-4-10				SCREW (80205)					1	
-104	NAS517-4-10				SCREW (80205)					1	
	AN960-10L				WASHER (88044)					14	
	AN960-416L				WASHER (88044)					2	
	MS21042L3				NUT (96906)					14	
	MS21042L4				NUT (96906)					2	
	850191-105	B.		CONVERSION KIT, gun to fuel tanks *(see fig. 260 for reqd)*						REF	
-105	786711-3	B.			COVER, LH fus sta 212 to 232 blast tube opening					1	
									Attaching Parts		
	NAS517-3-2	B.			SCREW (80205)					27	
-106	786678-3	C.			COVER, aft blast tube					1	
-107	NAS43DD5-36	C.			SPACER (80205)					3	
-108	AN960D516	C.			WASHER (88044)					3	
	777494-1	A.		COVER INSTL, LH fus sta 212 to 244 blast tube opening *(see fig. 30 for reqd)*						REF	
-109	777494-3	A.			COVER, LH fus sta 212 to 244 blast tube opening *(see fig. 30 for reqd)*					1	
									Attaching Parts		
-110	NAS517-3-2	A.			SCREW (80205)					51	
-111	NAS517-3-4	A.			SCREW (80205)					8	

A - Only for AWX
B - Only for FB
C - Only for FB - Removed per AA.1F-104-OT-759B

Figura e particolare	NDR	1 2 3 4 5 6 7	DENOMINAZIONE	Quant.	Codice applicab.
			GUNSIGHT AND WINDSHIELD ELECTRICAL		
227	783044-107		GUNSIGHT INSTL, optical (NHA 849071-101)	1	
	Q2714		KNOB ASSY, control (04211) *(see fig. 222)*	2	
- 1	MS21919DG6		CLAMP (96906)	2	
- 2	AN743B13		BRACKET (88044)	1	
			Attaching Parts		
- 3	AN520-10R10		SCREW (88044)	1	
	AN520-10R6		SCREW (88044)	1	
- 4	LS607-6		SPACER, phenolic (36659)	1	
- 5	MS21042L3		NUT (96906)	1	
- 6	LA2095B18-5		SHAFT, gunsight flexible drive (57711) (Lockheed spec dwg 669338-13)	1	
- 7	LA2095B33		SHAFT, gunsight flexible drive (57711) (Lockheed spec dwg 669338-15)	1	
	783044-109		GUNSIGHT, functional test unit	1	
- 8	724C779G3		AMPLIFIER, (AR3) sight electronic control (A0084) (89954) (Lockheed spec dwg 615615-101) (see T.O. 11F4-7-9-4)	1	
- 9	783044-111		GUNSIGHT ASSY, optical	1	
-10	171E840G6		SIGHT, (E17) optical display (A0084) (89954) (Lockheed spec dwg 615614-13) (see LR11-14404-206-4)	1	
			Attaching Parts		
-11	NAS1104-9		BOLT (80205)	4	
-12	AN960C416L		WASHER (88044)	4	
-13	LP623-3-10M	A.	SCREW (03038)	2	
-14	NAS623-3-4	A.	SCREW (80205)	6	
-15	AN960C10L	A.	WASHER (88044)	6	
-16	783823-101	F.	SIGHT, (E19) infrared detecting and tracking unit (see T.O. 11F39-6-3-4)	1	
-17	MS29513-235	A.	PACKING (96906)	1	
-18	614D245G2	A.	COMPUTER, (A10) missile in-range (A0084) (24446) (Lockheed spec dwg 615624-101) (see T.O. 11F12-16-5-4)	1	
	688D230G1	B.	ADAPTER, (B69) ground speed error readout (89954) (Lockheed spec dwg 671025-103) (NHA 850191-101)	1	
			Attaching Parts		
	NAS623-3-3	B.	SCREW (80205)	4	
	NAS623-3-3	A.	SCREW (80205)	6	
	AN960D10	A.	WASHER (88044)	2	
	MS21042L3	A.	NUT (96906)	2	
-19	790546-1	C.	ADAPTOR ASSY, infrared optical sight	1	
			Attaching Parts		
	NAS623-3-8	C.	SCREW (80205)	4	
	AN960-10L	C.	WASHER (88044)	4	
	790117-13	C.	SHIM (al laminated)	4	
	MS21042L3	C.	NUT (96906)	4	
-20	107B7615P1	C.	COVER (lens) (89954)	1	
			Attaching Parts		
	AN515B6R16	C.	SCREW (88044)	2	
	LS4446-6	C.	WASHER, synthetic rubber (36659)	2	
-21	790544-1		BOLT, sight head adaptor	1	
-21A	ELC1763	B.	MAGAZINE, (E18) gun camera (type N-9) (36126) (Lockheed spec dwg 670083-1) (see T.O. 10C1-3-13-4) (NHA 850191-101) (ELC1763 and ELC1797 alternate to DES917A)	1	
-21B	ELC1797	B.	CAMERA, (E18) 16 MM gun (type N-9) (A1996) (36126) (Lockheed spec dwg 670082-1) (see T.O. 10C1-3-13-4) (NHA 850191-101) (ELC1763 1nd ELC1797 alternate to DES917A)	1	
	ELC1797-4	D.	HOOK, clamping, magazine (A1996) (36126)	1	
	ELC1797-5	D.	PLATE, spring, clamping hook (A1996) (36126)	1	
	ELC1797SA27	D.	CLAMP ASSY, magazine (A1996) (36126)	1	

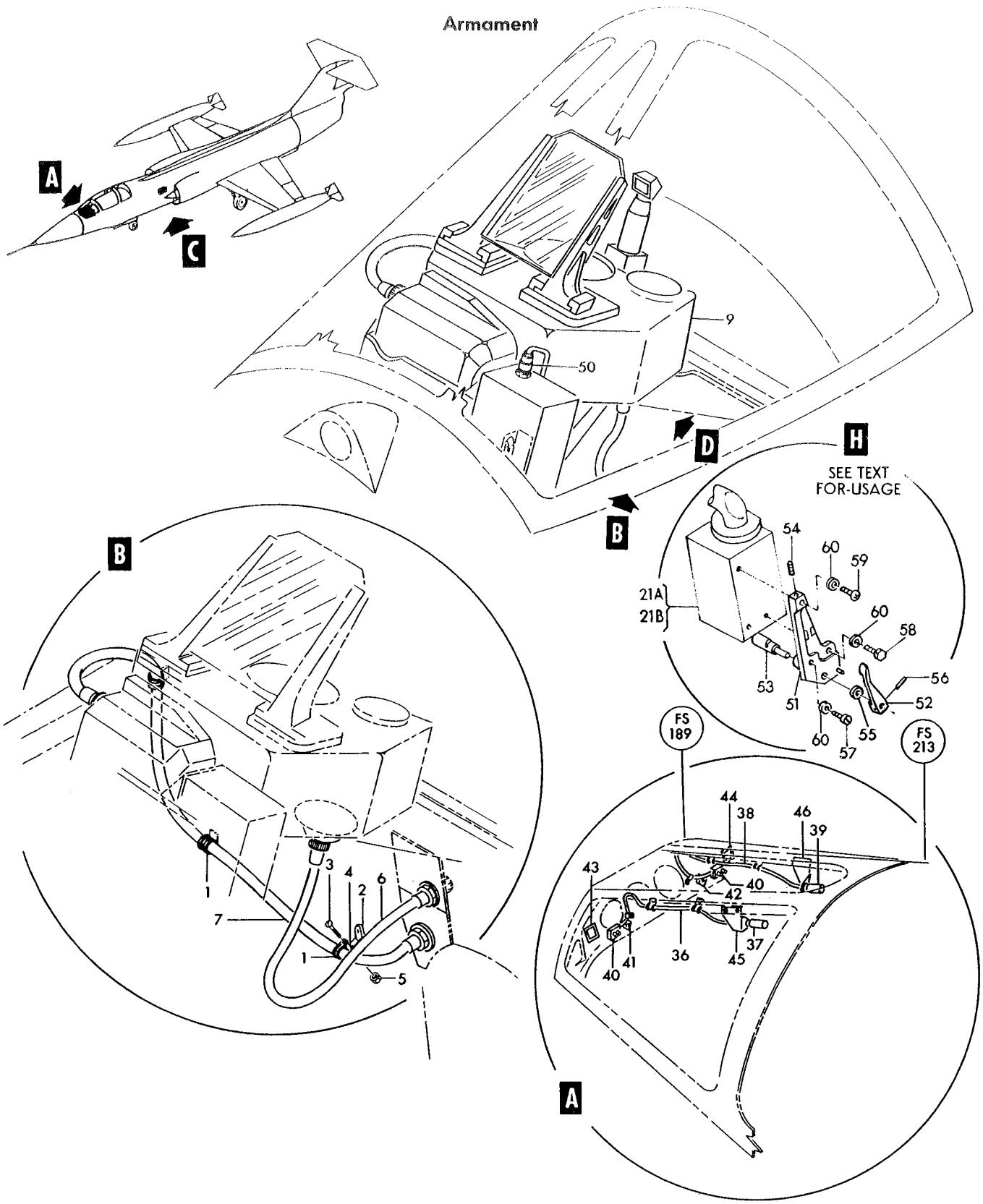

Figure 227—Gunsight and Windshield Electrical (Sheet 1 of 2)

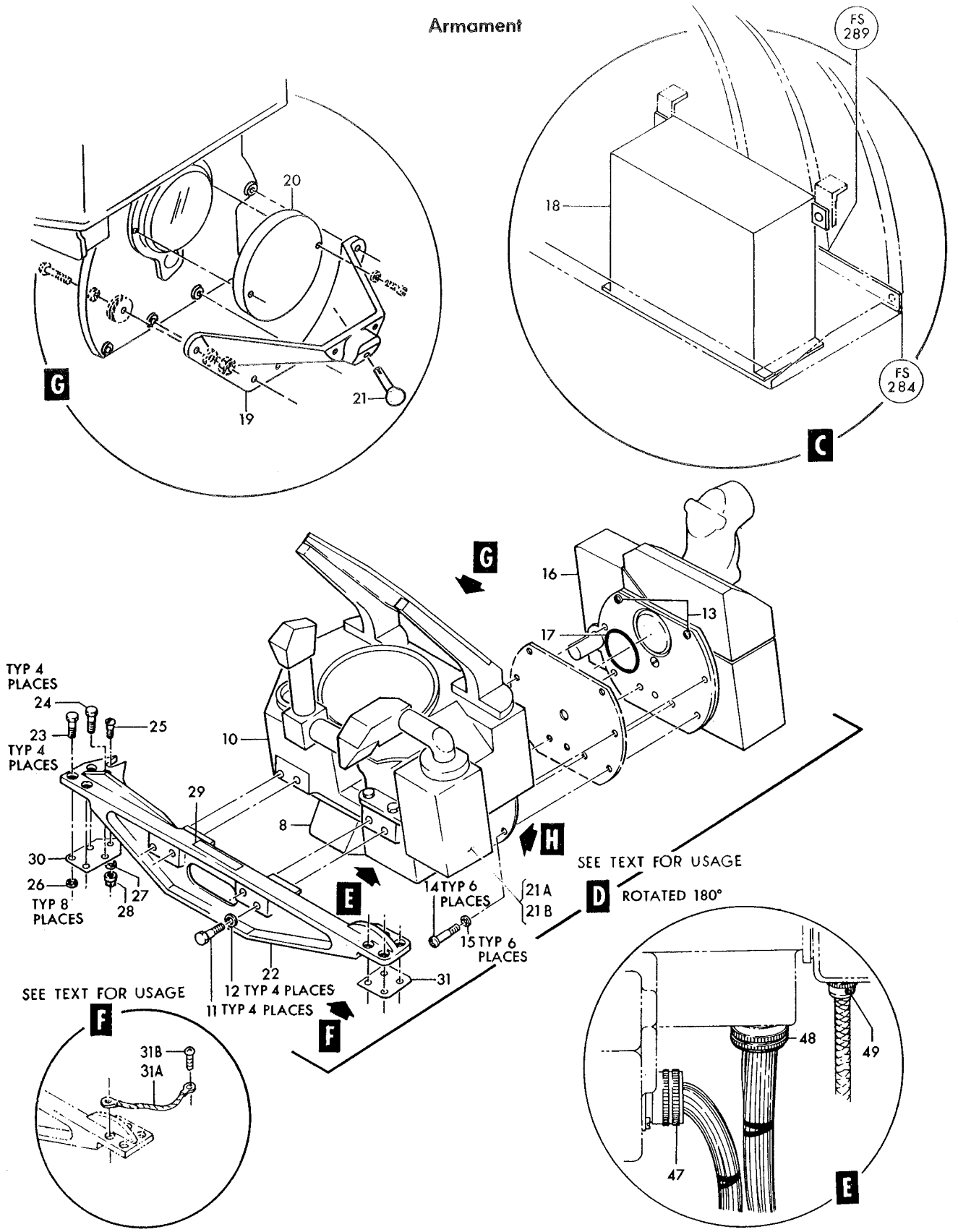

Figure 227— Gunsight and Windshield Electrical (Sheet 2 of 2)

Figura e particolare	NDR	1 2 3 4 5 6 7	DENOMINAZIONE	Quant.	Codice applicab.
227	COML	D.	SCREW, bind head, slot drive, cres 2-56NC-2 x 5/16 in. lg	2	
	COML	D.	WASHER, spring glock, cres, light, for No. 2 screw	2	
	DES917A	B.	CAMERA, (E18) 16 MM gun motion picture (type N-9) (06650) (see T.O. 10A1-2-3-4) (Alternate to ELC1763 and ELC1797) (NHA 850191-101)	1	
	091943	D.	CLAMP ASSEMBLY (06650)	1	
	99574	D.	STUD, magazine clamp (06650)	1	
	1000-18	D.	RING, retaining (97464)	2	
	99575	D.	WASHER, spring, magazine clamp (06650)	1	
	784497-1		FITTING INSTL, gunsight support (NHA 849141-101)	1	6701-6740
	784497-101		FITTING INSTL, gunsight support (NHA 849141-101)	1	6741-
-22	784495-1		FITTING ASSY, gunsight support	1	
			Attaching Parts		
-23	LS575-3-13		BOLT, internal hex head (36659)	4	
-24	LS575-3-100		BOLT, internal hex head (36659)	4	
-25	AN502-10-8		SCREW (88044)	1	
-26	NAS1197-10		WASHER (80205)	8	
-27	AN960D10		WASHER (88044)	1	
-28	MS21042L3		NUT (96906)	1	
-29	772594-1		NAMEPLATE, gunsight support	1	
-30	771985-1		FOIL, gunsight support fitting	1	6701-6740
-31	771986-1		FOIL, gunsight support fitting	1	6701-6740
-31A	MS25083-2BB2		JUMPER (96906)	1	6741-
			Attaching Parts		
-31B	NAS623-3-7		SCREW (80205)	1	6741-
	AN960D10		WASHER (88044)	1	6741-
	MS21042L3		NUT (96906)	1	6741-
	779208-503		ELECTRICAL INSTL, radar lock on indicator light *(see fig. 202 for reqd)*	REF	6701-6763
	779208-107		ELECTRICAL INSTL, radar lock on indicator light *(see fig. 202 for reqd)*	REF	6764-
	779208-504		ELECTRICAL INSTL, radar lock on indicator light *(see fig. 202 for reqd)*	REF	6701-6763
	779208-108		ELECTRICAL INSTL, radar lock on indicator light *(see fig. 202 for reqd)*	REF	6764-
-36	790965-1		HARNESS ASSY, radar lock on light (reqd on 779208-503)	1	6701-6763
	852062-101		HARNESS ASSY, radar lock on light (reqd on 779208-107)	1	6764-
-37	FI595		LIGHT, (DS33) transparent jewel indicator (radar lock on) (A1587) (alternate to VM812-8)	1	
	VM812-8		LIGHT, (DS33) transparent jewel indicator (radar lock on) (87034) (Lockheed spec dwg 619177-1) (alternate to FI595)	REF	
	MS25237-327		LAMP (96906)	1	
-38	786535-1		HARNESS ASSY, bomb release indicator light (reqd on 779208-504)	1	6701-6763
	852061-101		HARNESS ASSY, bomb release indicator light (reqd on 779208-108)	1	6764-
-39	FI596		LIGHT, (DS92) transparent jewel indicator (bomb release) (A1587) (alternate to VM812-7)	1	
	VM812-7		LIGHT, (DS92) transparent jewel indicator (bomb release) (87034) (Lockheed spec dwg 619177-3) (alternate to FI596)	REF	
	MS25237-327		LAMP (96906)	1	
-40	LS1900		TERMINAL BLOCK ASSY, electrical (36659)	1	
			Attaching Parts		
	AN515-4R8		SCREW (88044)	2	
	MS21042L04		NUT (96906)	2	
	AN3437-1-2		STRIP (88044)	1	
-41	LS4998TB25		DECAL, terminal block identification (36659) (reqd on 799208-503)	1	
-42	LS4998TB71		DECAL, terminal block identification (36659) (reqd on 799208-504)	1	
-43	787169-1		DECAL, radar lock on light wiring (reqd on 779208-503)	1	
-44	787168-1		DECAL, indicator light wiring (reqd on 779208-504)	1	
-45	773161-1		BRACKET, radar lock on indicator light *(see fig. 202 for reqd)*	REF	
-46	773161-2		BRACKET, radar lock on indicator light *(see fig. 202 for reqd)*	REF	
	849698-101		HARNESS ASSY, nozzle position indicator to bulkhead disconnect *(see fig. 160 for reqd)*	REF	

Figura e particolare	NDR	1 2 3 4 5 6 7 DENOMINAZIONE	Quant.	Codice applicab.
227-47	MS3103-16S1S	. . CONNECTOR, (J116) recp (gun camera) (96906)	1	
	849699-101	. HARNESS ASSY, optical sight head to bhd 255 disc. *(see fig. 160 for reqd)*	REF	6701-6765
	852133-101	. HARNESS ASSY, optical sight head to bhd 255 disc. *(see fig. 160 for reqd)*	REF	6766-6815
	852284-101	. HARNESS ASSY, optical sight head to bhd 255 disc. *(see fig. 160 for reqd)*	REF	6816-
-48	MS3116P22-55S	. . CONNECTOR, (P24) plug (optical sight head) (96906)	1	
-49	MS3116P20-41S	. . CONNECTOR, (P31) plug (optical sight amplifier) (96906)	1	
-50	DM9700-7S004	. . CONNECTOR, (P43) plug (infrared sight) (17419)	1	
-51	FL0291-101	E. SUPPORT, gun camera (A0019)	1*	
-52	FL0292-101	E. ARM, gun camera (A0019)	1 *	
-53	FL0293-101	E. CAMME, gun camera (A0019)	1 *	
-54	MS51965-20	E. SCREW (96906)	1 *	
-55	AN960-416L	E. WASHER (88044)	1 *	
-56	MS20427-3C9	E. RIVET (96906)	1 *	
-57	AN502-10-10	E. SCREW (88044)	1 **	
-58	NAS1096-3-6	E. SCREW (80205)	1 **	
-59	NAS623-3-4	E. SCREW (80205)	1 **	
-60	AN936B10	E. WASHER (88044)	3 **	

* - NOTE: Components FL0236-100 (NHA FL0236-000)
** - NOTE: Components FL0236-000 (NHA 850191-101)

A - Only for AWX
B - Only for FB
C - All parts marked with letter C serve for sparrow to gun conversion kit 850191-101
D - Removed per AA.1F-104-OT-665 use only on aircraft FB
E - Reqd per AA.1F-104-OT-655 use only on aircraft FB
F - Only for AWX - Modified per AA.1F-104-OT-402 and AA.1F-44-OT-744

Figura e particolare	NDR	1 2 3 4 5 6 7 DENOMINAZIONE	Quant.	Codice applicab.
		AUTOMATIC GUN, YOKE AND ADJUSTABLE AFT MOUNT		
228	784262-1	B. ARMAMENT INSTL (LH only) *(see fig. 30 for reqd)*	REF	
- 1	764652	B. . FITTING ASSY, gun yoke forward	1	
		Attaching Parts		
- 2	726777-3	B. . BOLT, gun yoke	1	
- 3	MS20002C16	B. . WASHER (96906)	1	
- 4	726100-3	B. . WASHER, gun yoke	1	
- 5	AN310-16	B. . NUT (88044)	1	
		*		
	764652-3	B. . . FITTING, gun yoke forward	1	
- 6	LS3859R10-13	B. . . BUSHING, plain (36659)	4	
	779459-101	B. . SHROUD INSTL, gun gas purge	1	
	779459-3	B. . . SHROUD ASSY, gun gas purge compartment *(see fig. 148)*	1	
- 8	779459-5	B. . . . PANEL, shroud side	1	
- 9	779459-7	B. . . . PANEL, shroud aft	1	
-10	779459-9	B. . . . PANEL, shroud forward	1	
-11	779459-27	B. . . . PANEL, shroud	1	
-12	779459-31	B. . . . COVER, shroud	1	
-13	AN227-1	B. . . . SOCKET (88044)	15	
-14	AN227-2	B. . . . PLATE (88044)	15	
-15	AN227-3	B. . . . WASHER (88044)	11	
-16	AN227-5	B. . . . STUD (88044)	11	
-17	AN240-3	B. . . . EYELET (88044)	1	
-18	500-1 11-16 10	B. . . . ZIPPER, pressure sealing (03481)	1	
-19	500-1 11-16 20	B. . . . ZIPPER, pressure sealing (03481)	1	
	779460-101	B. . . FRAME ASSY, shroud	1	6701-6778
	779460-105	B. . . FRAME ASSY, shroud	1	6779-
-20	AN227-4L	B. . . . STUD (88044)	4	
-21	AN227-4	B. . . . STUD (88044)	3	
-22	MS21042L06	B. . . . NUT (96906)	4	
	780222-1	B. . NAMEPLATE, gun boresight warning	1	
	780173-1	B. . SHAFT INSTL, T12 feeder flexible ammunition booster	1	
-23	8725Y0A2900	B. . . SHAFT ASSY, flexible drive (79555) (Lockheed spec dwg 669454-1) (use with T12 feeder) *(see fig. 229)*	1	
	764641	B. . MOUNT INSTL, aft adjustable gun	1	
-24	AN175H13	B. . . BOLT (88044)	2	
-25	AN960-516	B. . . WASHER (88044)	4	
-26	AN310-5	B. . . NUT (88044)	2	
-27	764642	B. . . FITTING ASSY, aft gun mount	1	
-28	764643	B. . . . BALL, aft gun mount	1	
-29	AN174-24	B. . . . BOLT (88044)	1	
-30	AN960-416L	B. . . . WASHER (88044)	1	
-31	AN320-4	B. . . . NUT (88044)	1	
	764642-3	B. . . . FITTING ASSY, gun mount aft	1	
-32	764642-4	B. . . . . FITTING, gun mount aft	1	
-33	LS3859R16-30	B. . . . . BUSHING, plain (36659)	1	
-34	LS3859-5-8	B. . . . . BUSHING, plain (36659)	4	
-35	760564	B. . . MOUNT ASSY, double post adjustable	1	
	MS24665-300	B. . . . COTTER PIN (96906)	1	
-36	AN320-8	B. . . . NUT (88044)	1	
-37	AN960-816L	B. . . . WASHER (88044)	1	
-38	760569	B. . . . SCREW, adjustable mount elevation	1	
-39	AN502-10-8	B. . . . SCREW (88044)	14	
-40	760571	B. . . . RETAINER, adjustable mount screws	1	
-41	726112-3	B. . . . NUT, adjustable mount azimuth	1	
-42	760568	B. . . . SCREW, aft mount adjustable azimuth	1	
-43	AN280H304	B. . . . KEY (88044)	1	
-44	726111-3	B. . . . SPRING, adjustable mount click	1	
-45	NO NUMBER	B. . . . BALL, chrome steel (grade 3 3/16) (72962)	2	
-46	NAS561P3-10	B. . . . PIN (80205)	2	

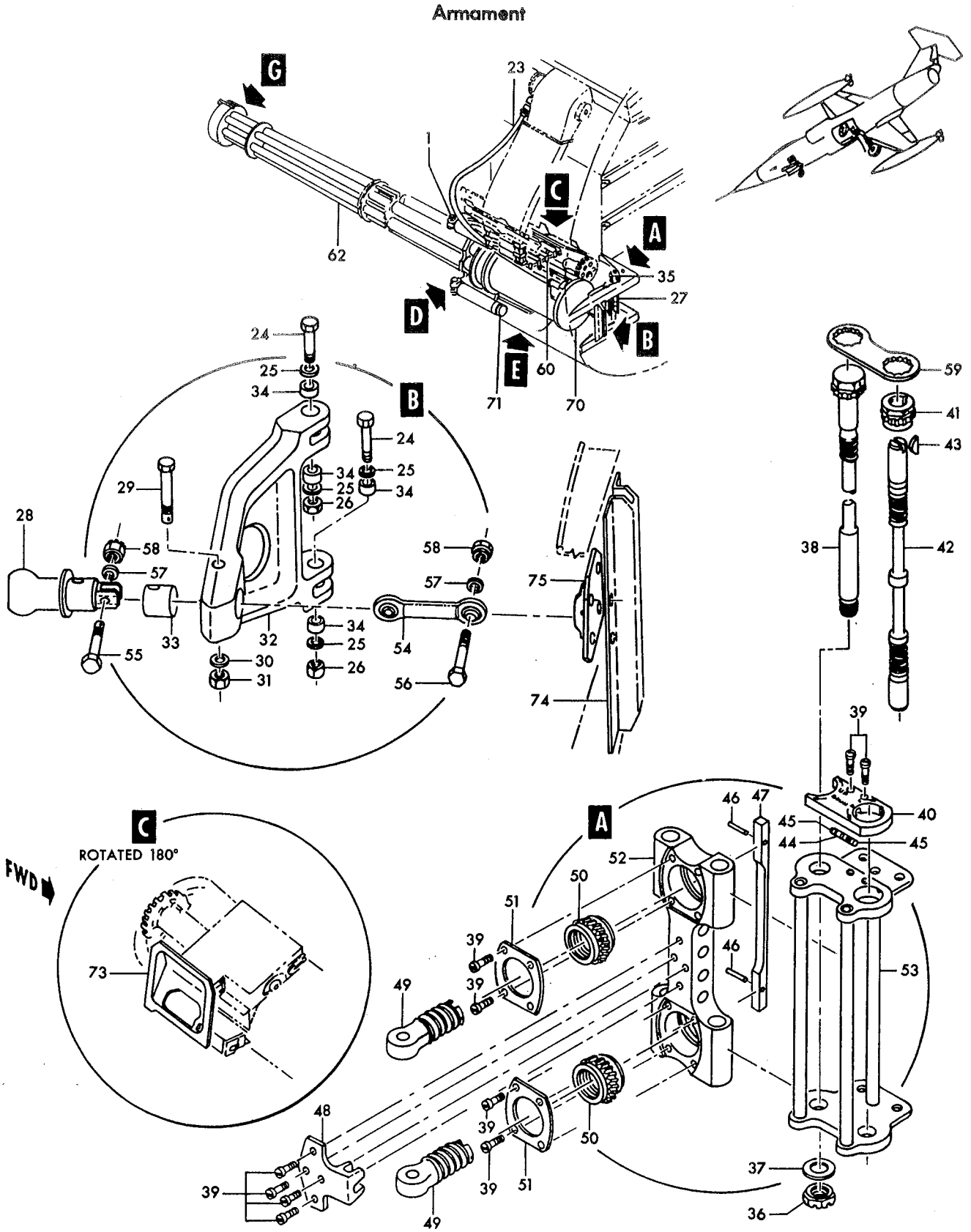

Figure 228— Automatic Gun, Yoke and Adjustable Aft Mount (Sheet 1 of 2)

Armament

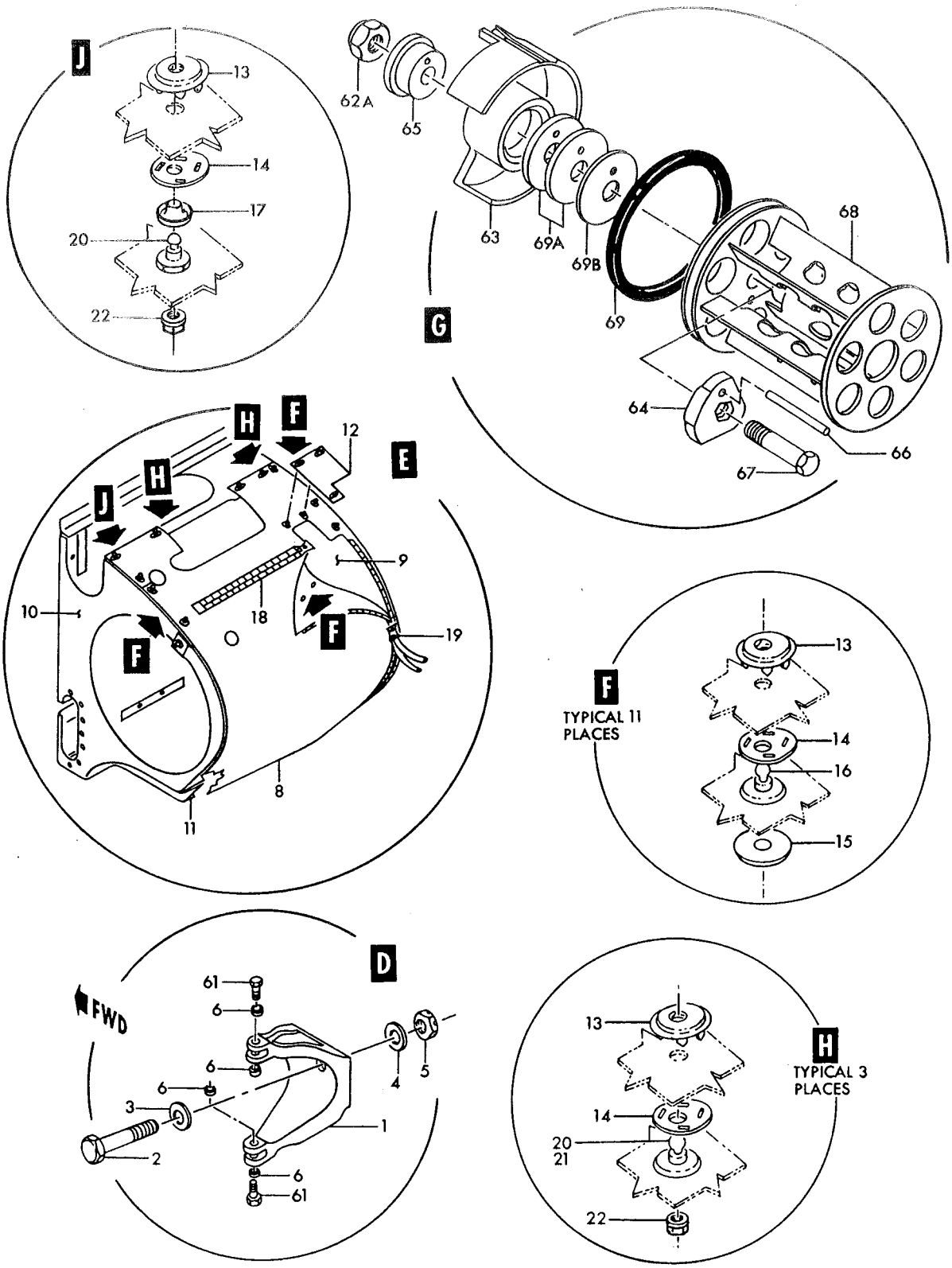

Figure 228— Automatic Gun Yoke and Adjustable Aft Mount (Sheet 2 of 2)

Figura e particolare	NDR		DENOMINAZIONE	Quant.	Codice applicab.
228-47	760573	B.	RETAINER, aft mount click adjustable	1	
-48	760572	B.	KEEPER, adjustable mount azimuth screw	1	
-49	760567	B.	POST, aft mount adjustable azimuth	2	
-50	452716	B.	GEAR, gun mount worm	2	
-51	760574	B.	PLATE, adjustable mount gear retaining	2	
-52	760566	B.	HOUSING, adjustable mount gear	1	
-53	760565	B.	FRAME ASSY, adjustable mount	1	
-54	750550-3	B.	LINK, aft mount support	1	
-55	AN174-12	B.	BOLT (88044)	1	
-56	AN174-15	B.	BOLT (88044)	1	
-57	AN960-416	B.	WASHER (88044)	2	
-58	AN310-4	B.	NUT (88044)	2	
-59	766403-1	B.	KEEPER, gun mount adjusting screw	1	
	784262-3	B.	MECHANISM INSTL, armament firing (NHA 849071-101)	1	
-60	0628C3110	B.	CHUTE ASSY, 20 mm ammunition feed (76793) (Lockheed spec dwg 601032-7) (see LR5-14404-231-3) *(see fig. 229)*	1	
	778849-501	A.	CHUTE INSTL, T76 link *(see fig. 230)*	1	6701-6760
-61	NAS1110-24D	B.	BOLT (80205)	2	
	AN960-1016	B.	WASHER (88044)	2	
	AN320-10	B.	NUT (88044)	2	
	MS24665-357	B.	COTTER PIN (96906)	2	
	784262-5	B.	GUN ASSY, armament	1	6701-6865
	784262-101	B.	GUN ASSY, armament	1	6866-
-62	7268702	B.	GUN, automatic 20 mm (M61) (see T.O. 11W1-12-4-34)	1	
	778773-501	B.	CLAMP INSTL, flexible ammunition booster	1	6701-6865
	778773-101	B.	CLAMP INSTL, flexible ammunition booster	1	6866-
-62A	7268960	B.	NUT (gun muzzle) (reqd on 7268702)	REF	
-63	779969-1	B.	COVER, gun muzzle	1	6701-6865
	852412-101	B.	COVER, gun muzzle	1	6866-
-64	779613-1	B.	LOOK, muzzle clamp	1	
-65	778782-3	B.	JOURNAL, gun muzzle cover	1	
-66	NAS561P6-28	B.	PIN (80205)	1	
-67	NAS1010-23	B.	BOLT (80205)	1	
-68	7790340	B.	CLAMP, muzzle	1	
-69	751232-1	B.	SEAL, gun muzzle	1	
-69A	778886-1	B.	SHIM	2	
-69B	778886-3	B.	SHIM	AR	
-70	7794549	B.	FEEDER, gun T12	1	
	7269701	B.	PIN, feeder mounting	2	
-71	7269497	B.	DRIVE, gun (M7) electric 203 V AC	1	
	7269912	B.	BOLT	4	
	MS15795-212	B.	WASHER (96906)	4	
	7268835	B.	BOLT	1	
	7268956	B.	NUT	1	
	593736	B.	BOLT	2	
	7268878	B.	WASHER	2	
	7269723	B.	SUPPORT	1	
	783243-103		WEB ASSY, fus sta 265 to 355 BL 8 LH *(see fig. 38 for reqd)*	REF	
	775582-101		PAN INSTL, link ejection chute attachment	1	
-73	775582-3		PAN, link ejection chute	1	
	764548		SUPPORT INSTL, aft gun mount (LH only) *(see fig. 30 for reqd)*	REF	
-74	764548-3		SUPPORT ASSY, aft gun mount	1	
-75	764373		FITTING ASSY, aft gun mount attaching *(see fig. 256 for reqd)*	REF	

A - Only for FB - Removed per AA.1F-104-OT-719A
B - Only for FB

Figura e particolare	NDR		DENOMINAZIONE 1 2 3 4 5 6 7	Quant.	Codice applicab.
			AMMUNITION CAN, COVER, BOOSTER AND FEED CHUTES		
229	760870-101	B.	CAN INSTL, ammunition (NHA 849138-101)	1	
	760870-103	B.	. CAN ASSY, ammunition complete	1	
-1	760788-105	B.	. . CAN ASSY, ammunition	1	
			Attaching Parts		
-2	NAS221-9	B.	. . SCREW (80205)	16	
-3	NAS221-15	B.	. . SCREW (80205)	2	
-4	MS20004-10	B.	. . BOLT (96906)	1	
-5	MS20004-8	B.	. . BOLT (96906)	1	
-6	MS20004-6	B.	. . BOLT (96906)	2	
-7	727818-1	B.	. . WASHER, partition	4	
-8	AN960D10	B.	. . WASHER (88044)	16	
-9	AN970-3	B.	. . WASHER (ammunition can bearing) (88044)	2	
-10	726039-3	B.	. . SPACER, ammunition can side	1	
-11	726039-4	B.	. . SPACER, ammunition can side	1	
			——————☼——————		
-13	760788-64	B.	. . . HINGE, ammunition can	2	
-14	750349-4	B.	. . . RELEASE, ammunition can	1	
	760788-42	B.	. . . END ASSY, ammunition can	1	
-15	760788-38	B.	. . . . HINGE, ammunition can	1	
-16	MS27253-2	B.	. . . NAMEPLATE, identification (96906)	1	
-17	760769-501	B.	. . SHELF ASSY, ammunition can	6	
-18	750741-1	B.	. . . RELEASE ASSY, ammunition can shelf	2	
-19	764541	B.	. . . FITTING, ammunition can shelf	2	
-20	760773	B.	. . . FITTING, ammunition can shelf	2	
-21	760543-501	B.	. . SHELF ASSY, ammunition can	1	
-22	760543-14	B.	. . . HINGE, ammunition can shelf	2	
-23	770238-501	B.	. . COVER ASSY, ammunition can	1	
	767377-501	B.	. . . GUIDE ASSY, cover	1	
-24	760612-11	B.	. . . HINGE, ammunition can cover	1	
-25	770238-17	B.	. . . CLIP, ammunition can cover	1	
			Attaching Parts		
-26	NAS623-3-1	B.	. . . SCREW (80205)	1	
-27	AN960-10L	B.	. . . WASHER (88044)	1	
-28	MS21042L3	B.	. . . NUT (96906)	1	
			——————☼——————		
-29	750349-3	B.	. . . RELEASE, ammunition can cover	1	
-30	760870-4	B.	. . PIN, ammunition can hinge	2	
-31	760870-3	B.	. . PIN, ammunition can hinge	1	
-32	760777-601	B.	. BOOSTER ASSY, ammunition can (see T.O. 11W1-3-11-3)	1	
-33	MS21042L5	B.	. . NUT (96906)	1	
-34	AN960-516	B.	. . WASHER (88044)	1	
-35	726054-3	B.	. . SHIM, gear booster ammunition can	1	
-36	MS15001-1	B.	. . FITTING (96906)	2	
-37	MS21042L3	B.	. . NUT (96906)	6	
-38	AN960D10	B.	. . WASHER (88044)	6	
-39	NAS623-3-4	B.	. . SCREW (80205)	5	
-40	NAS1203-4	B.	. . SCREW (80205)	1	
-41	726145-3	B.	. . SHIM, washer	6	
-42	MS16624-1056	B.	. . RETAINER (96906)	1	
-43	NAS561P4-8	B.	. . PIN (80205)	1	
-44	NAS561P3-12	B.	. . PIN (80205)	2	
-45	LS2123-2-0-750	B.	. . KEY, square (36659)	2	
-46	MS21042L3	B.	. . NUT (96906)	3	
-47	AN960D10	B.	. . WASHER (88044)	3	
-48	726145-3	B.	. . SHIM, washer	3	
-49	NAS623-3-2	B.	. . SCREW (80205)	3	
-50	774145-101	B.	. CHUTE ASSY, ammunition feed adapter	1	
	764380	B.	. COVER ASSY, ammunition booster housing	1	
-51	8725Y0A2900	B.	SHAFT ASSY, flexible drive (79555) (Lockheed spec dwg 669454-1) (use with T12 feeder) *(see fig. 228 for reqd)*	REF	
-52	0628C3110	B.	CHUTE ASSY, 20 mm ammunition feed (76793) (Lockheed spec dwg 601032-7) (see LR5-14404-231-3) *(see fig. 228 for reqd)*	REF	

B - Only for FB

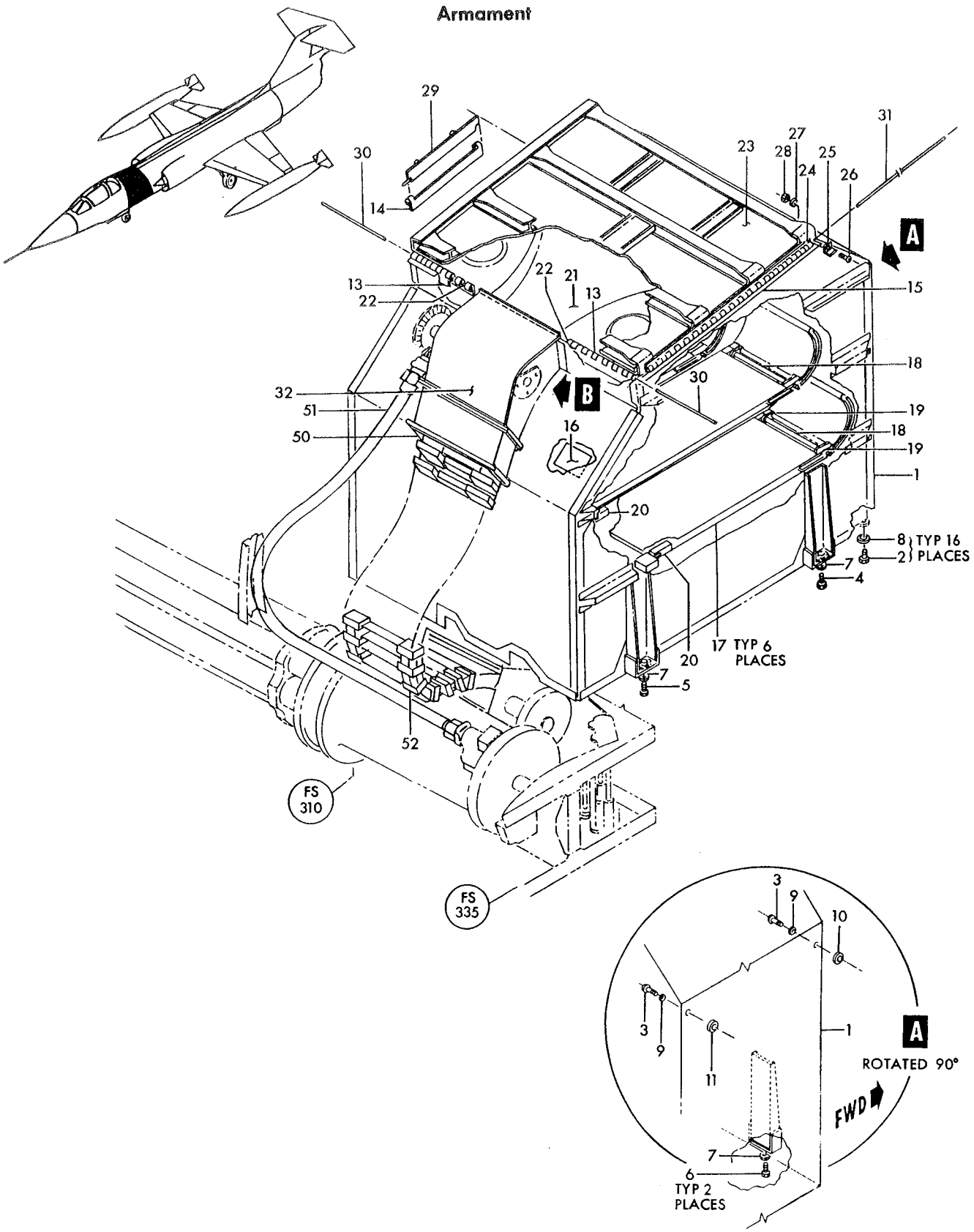

Figure 229— Ammunition Can, Cover, Booster and Feed Chutes (Sheet 1 of 2)

Armament

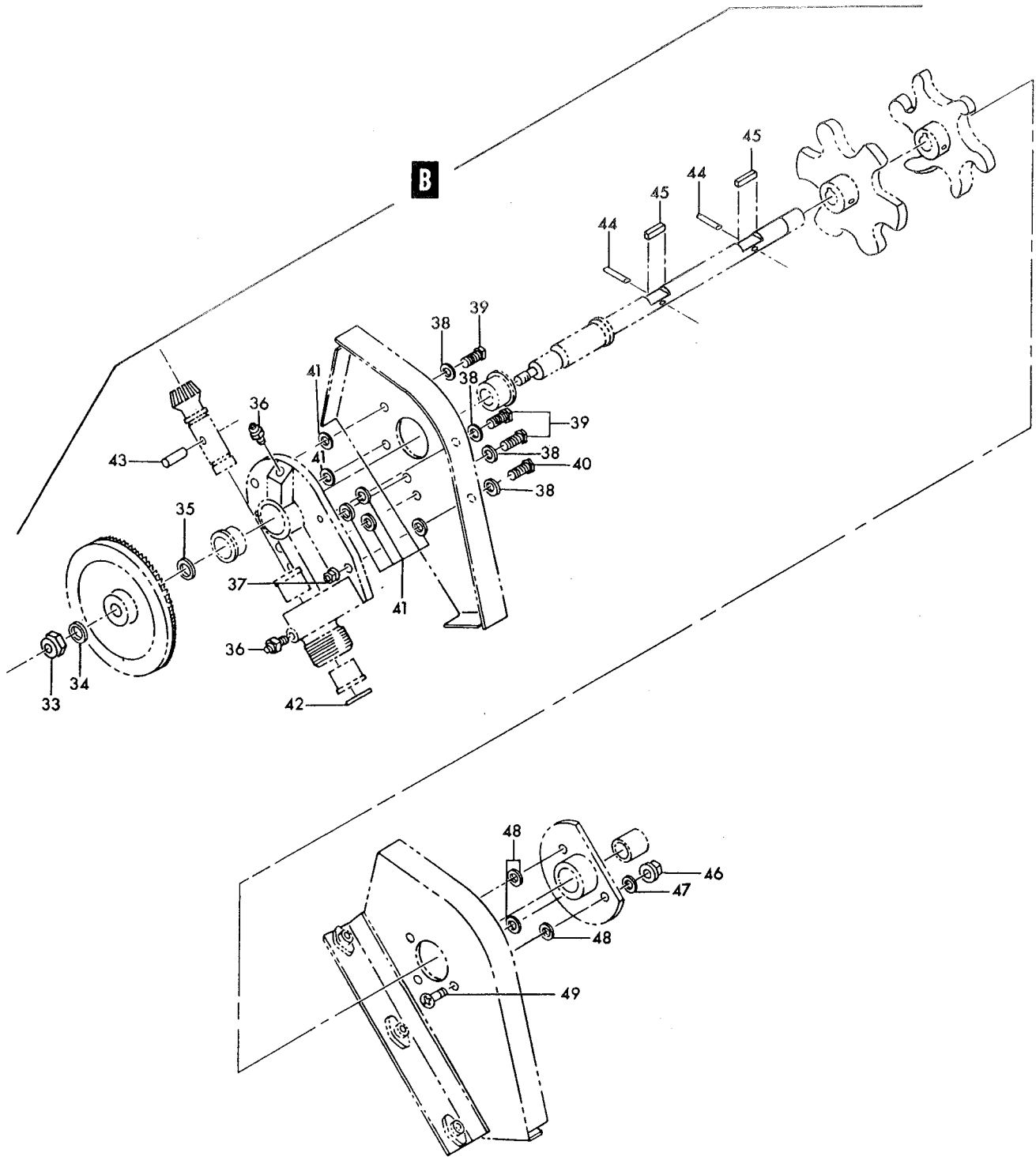

Figure 229—Ammunition Can, Cover, Booster and Feed Chutes (Sheet 2 of 2)

Figura e particolare	NDR	1 2 3 4 5 6 7 DENOMINAZIONE	Quant.	Codice applicab.
		GUN DEBRIS CONTAINER AND EJECTION CHUTES		
230	783269-1	C. COVER INSTL, case stowage compartment (NHA 849141-101)	1	
	785989-101	D. COVER INSTL, case stowage compartment (NHA 849141-101)	1	
	784761-1	M. . PAN INSTL, fus sta 305 to 335 case stowage compt *(see fig. 98)*	1	6701-6815
	784761-101	I. . PAN INSTL, fus sta 305 to 335 case stowage compt *(see fig. 98)*	1	
- 1	783420-3	C. . COVER, case stowage compartment air dump valve	1	
	785200-3	D. . COVER, case stowage compartment air dump valve *(see fig. 98 for reqd)*	REF	
		Attaching Parts		
	NAS623-3-2	. . SCREW (80205)	22	
	AN960D10	. . WASHER (88044)	22	
		*		
- 2	783420-1	C. . COVER, case stowage compartment air dump valve	1	
	785200-1	D. . COVER, case stowage compartment air dump valve *(see fig. 98 for reqd)*	REF	
		Attaching Parts		
	NAS623-3-2	. . SCREW (80205)	24	
	AN960D10	. . WASHER (88044)	24	
		*		
- 3	784666-1	N. . COVER, lower case stovage	1	6701-6815
	852186-101	L. . COVER ASSY, lower case stowage	1	
- 3A	852186-103	L. . . COVER, lower case stowage	1	
- 3B	852171-101	L. . . PROTECTION, lower case stowage	1	
- 3C	NAS623-3-2	L. . . SCREW (80205)	6	
- 3D	LS881-6	L. . . WASHER, plain aluminum (36659)	12	
- 3E	MS21042L3	L. . . NUT (96906)	6	
		Attaching Parts		
	NAS623-3-2	C. . SCREW (80205)	20	
- 4	NAS623-3-3	C. . SCREW (80205)	1	
		*		
	LS881-6	C. . WASHER, plain aluminum (36659)	21	
- 5	783275-1	C. . COVER, case stowage compartment RH side hydraulic lines	1	
		Attaching Parts		
	NAS623-3-2	C. . SCREW (80205)	6	
	AN960D10	C. . WASHER (88044)	6	
		*		
- 6	783276-1	C. . COVER, case stowage compartment hydraulic lines	1	
		Attaching Parts		
	NAS623-3-9	C. . SCREW (80205)	4	
	AN960D10	C. . WASHER (88044)	4	
	LS634-42	C. . SPACER, flanged (36659)	4	
		*		
- 7	783270-1	C. . CHANNEL, case stowage compartment	1	
		Attaching Parts		
- 8	NAS623-3-2	C. . SCREW (80205)	6	
- 9	NAS623-3-4	C. . SCREW (80205)	1	
	AN960D10	C. . WASHER (88044)	7	
		*		
-10	783423-1	C. . COVER, case stowage compartment drag chute cable	1	
		Attaching Parts		
	NAS623-3-2	C. . SCREW (80205)	4	
	AN960D10	C. . WASHER (88044)	4	
		*		
-11	783271-1	C. . CHANNEL ASSY, case stowage manual release cable cover	1	
		Attaching Parts		
	NAS623-3-6	C. . SCREW (80205)	2	
	AN960D10	C. . WASHER (88044)	2	
		*		
	783269-9	C. SEAL INSTL, case stowage compartment *(see fig. 30 for reqd)*	REF	
	785989-3	. SEAL INSTL, case stowage compartment *(see fig. 30 for reqd)*	REF	
-12	778875-3	. . SEAL ASSY, case stowage	1	

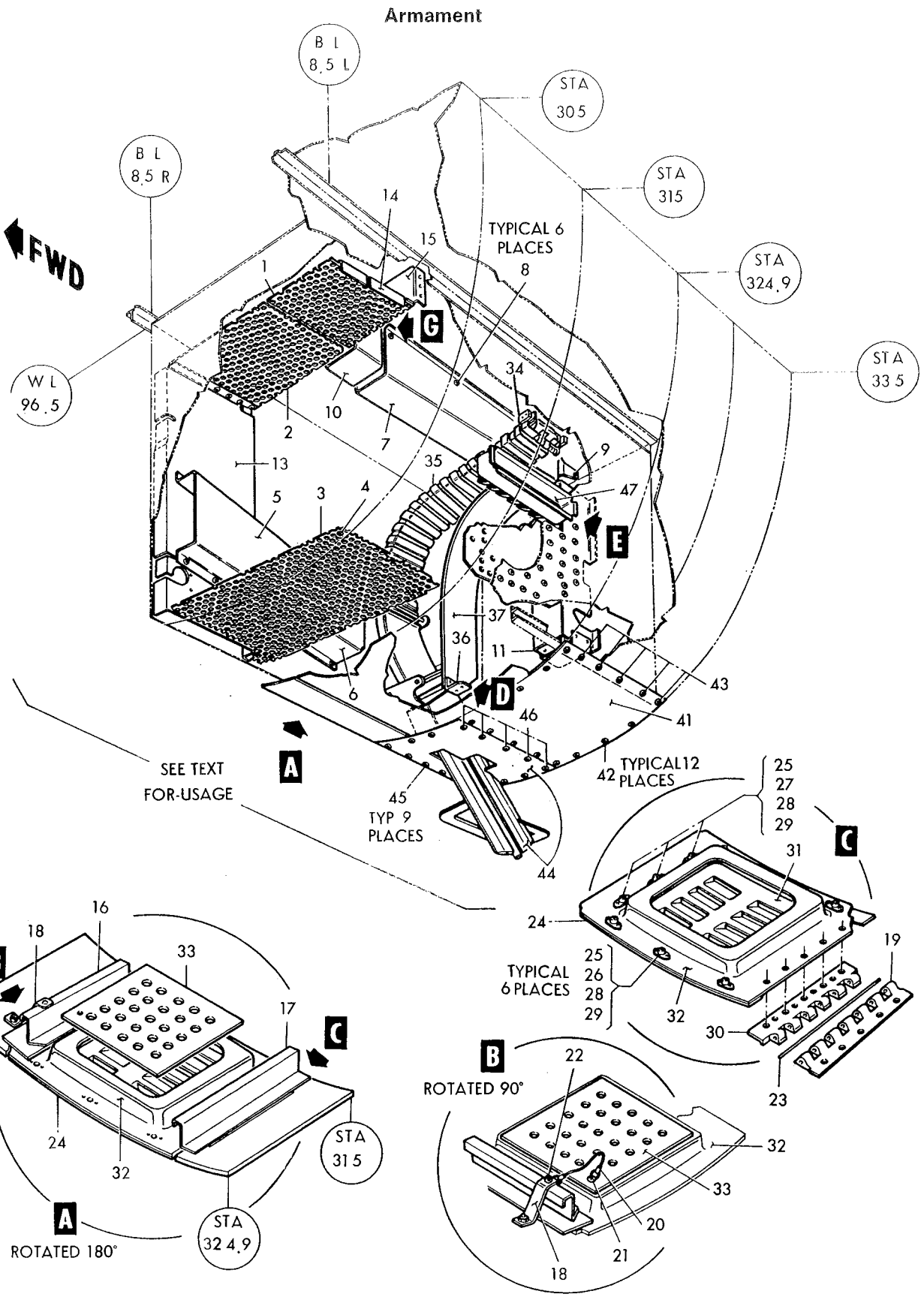

Figure 230–Gun Debris Container and Ejection Chutes (Sheet 1 of 4)

Armament

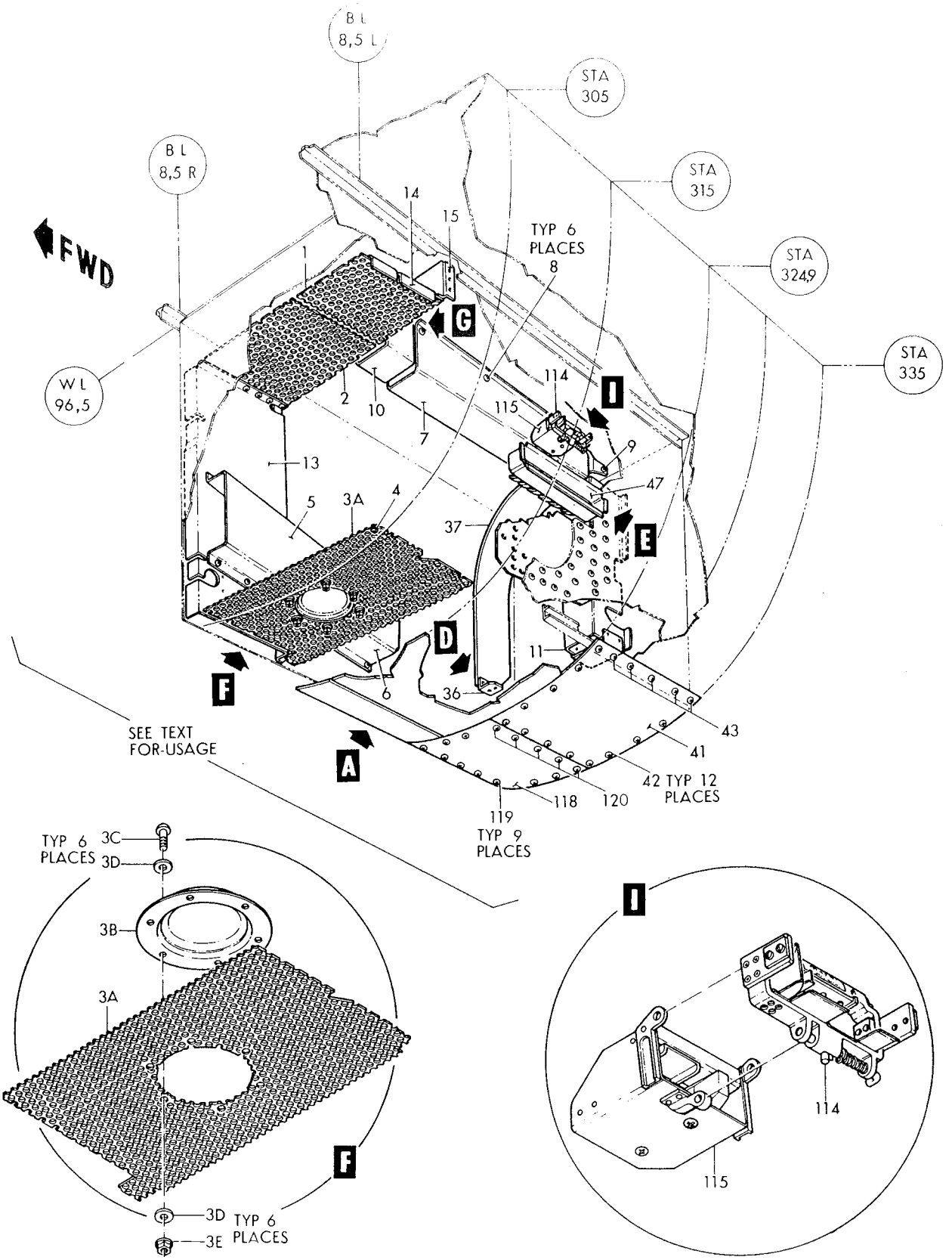

Figure 230-Gun Debris Container and Ejection Chutes (Sheet 2 of 4)

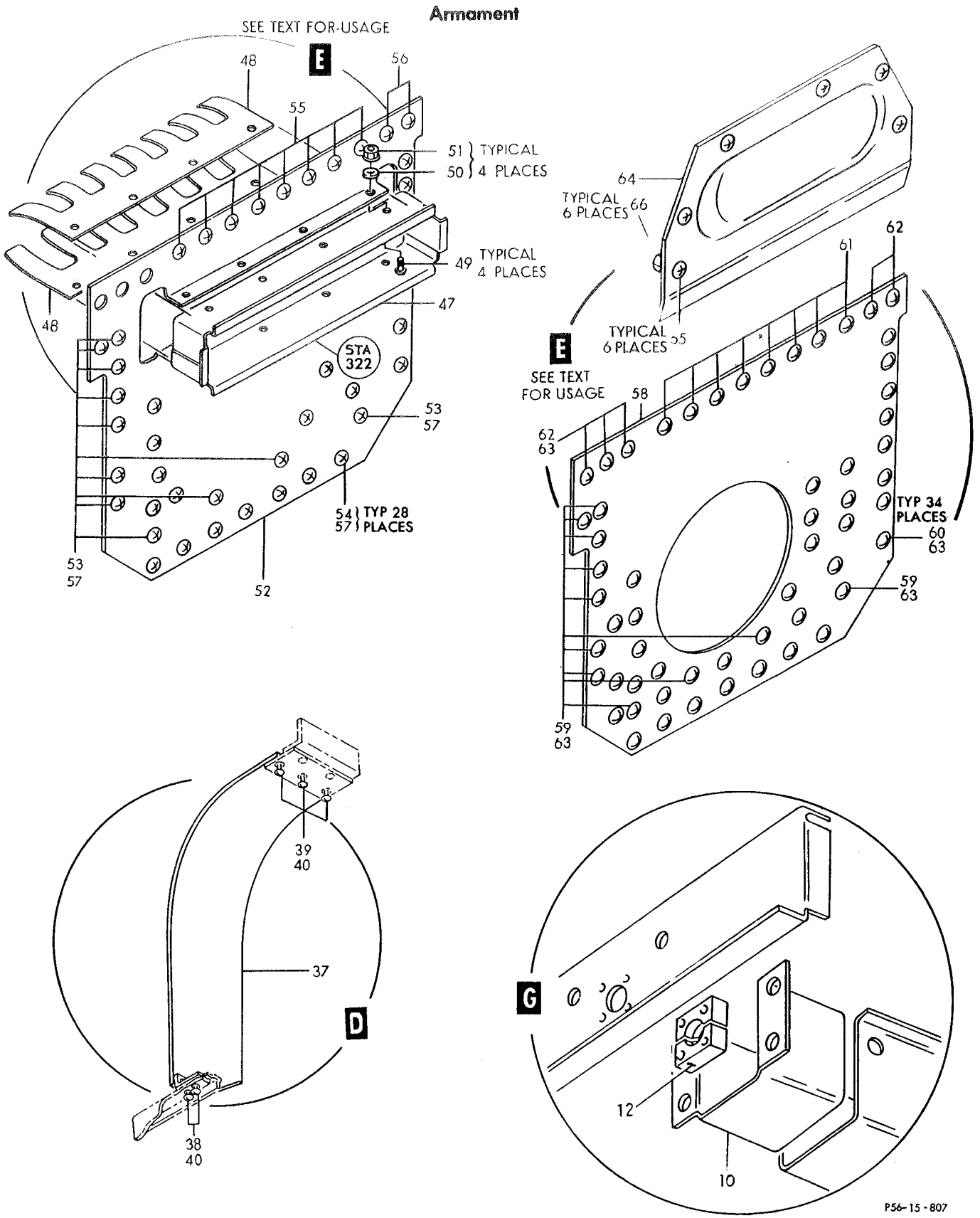

Figure 230—Gun Debris Container and Ejection Chutes (Sheet 3 of 4)

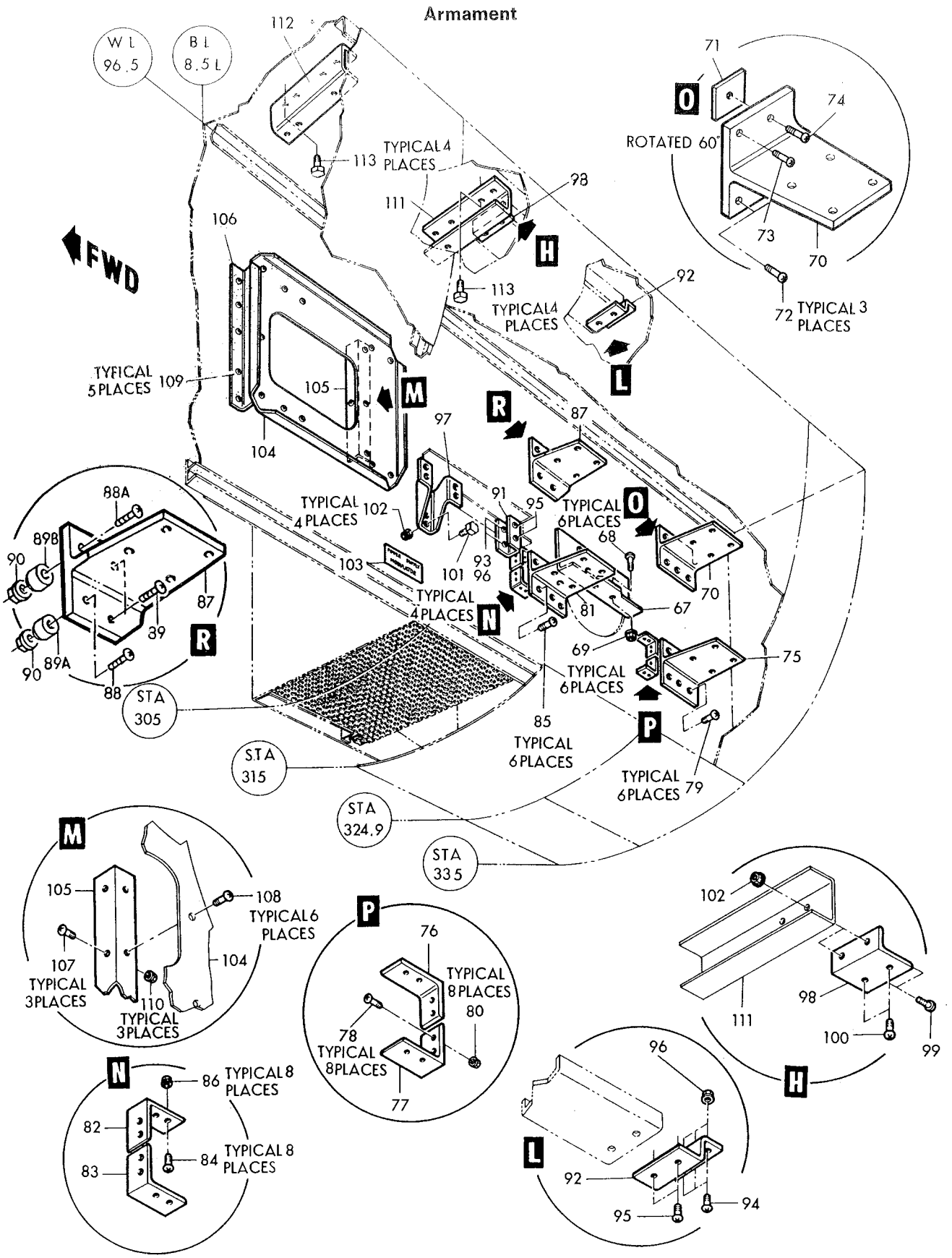

Figure 230–Gun Debris Container and Ejection Chutes (Sheet 4 of 4)

Figura e particolare	NDR	1	2	3	4	5	6	7	DENOMINAZIONE	Quant.	Codice applicab.
									Attaching Parts		
230	AN520-10R14								SCREW (88044)	4	
	MS21042L3								NUT (96906)	4	
	783269-103								ANGLE INSTL, case stowage compartment *(see fig. 30 for reqd)*	REF	
-13	783272-1								DUCT ASSY, case stowage air dump electronic compartment	1	
	783269-105								SUPPORT INSTL, case stowage compartment (LH only) *(see fig. 30 for reqd)*	REF	
-14	783421-1								SUPPORT ASSY, air discharge duct BL 8.5L and electronic compartment	1	
-15	783424-1								SUPPORT ASSY, fus sta 313 cabin and electronic compartment air discharge duct	1	
	774977-1								PANEL INSTL, fus sta 315 to 324 case clean out access (NHA 849141-101)	1	6701-6740
	774977-101								PANEL INSTL, fus sta 315 to 324 case clean out access (NHA 849141-101)	1	6741-
-16	774704-1								INTERCOSTAL ASSY, fus sta 315 to 324 access panel	1	
-17	774707-1								INTERCOSTAL, fus sta 315 left side access panel	1	
-18	774789-1								BRACE, fus sta 324 door stop	1	
-19	774955-1	D.							HINGE, fus sta 315 to 324 upper case clean out door half	1	
									Attaching Parts		
	NAS517-3-3								SCREW (80205)	5	
	MS21042L3								NUT (96906)	5	
-20	8717								CHAIN ASSY (86831)	1	
									Attaching Parts		
-21	NAS623-3-3								SCREW (80205)	1	
-22	NAS623-3-4								SCREW (80205)	1	
	AN960D10								WASHER (88044)	1	
-23	774977-9								PIN, hinge	1	
-24	774958-1	E.							DOOR ASSY, fus sta 315 to 324 case clean out *(see fig. 61)*	1	6701-6740
	774958-101								DOOR ASSY, fus sta 315 to 324 case clean out *(see fig. 61)*	1	6741-
-25	244-16								RECEPTACLE, camloc (71286) (reqd on 774977-1 and 774977-101)	9	
-26	4002-5								STUD, camloc (71286)	6	
-27	4002-6								STUD, camloc (71286)	3	
-28	4002G								GROMMET, camloc (71286)	9	
-29	R4G								RING, snap (71286)	9	
	774957-1								HINGE ASSY, fus sta 315 to 324 lower case clean out door half	1	
-30	774956-1								HINGE, fus sta 315 to 324 lower case clean out door half	1	
									Attaching Parts		
	NAS517-3-3								SCREW (80205)	5	
	MS21042L3								NUT (96906)	5	
-31	774958-3	E.							SPOTWELD ASSY, fus sta 315 to 324 case clean out door	1	6701-6740
	774958-103	F.							SPOTWELD ASSY, fus sta 315 to 324 case clean out door	1	
-32	774959-1								FRAME ASSY, fus sta 315 to 324 case clean out door	1	
-33	774960-1								COVER, fus sta 315 to 324 case clean out door	1	
	778849-501	G.							CHUTE INSTL, T76 link *(see fig. 228 for reqd)*	REF	6701-6760
-34	1312B3112	G.							ADAPTER, 20 mm ejection chute (76793) (Lockheed spec dwg 601036-3) (see T.O. 11W1-2-9-3)	1	6701-6760
-35	0728C3111	G.							CHUTE, 20 mm ammunition flexible link (76793) (Lockheed spec dwg 601039-5) (see LR5-14404-232-3)	1	6701-6760
-36	780473-1	G.							SUPPORT ASSY, T76 link	1	6701-6760
									Attaching Parts		
	AN520-10R8	G.							SCREW (88044)	2	6701-6760
	AN960D10	G.							WASHER (88044)	2	6701-6760
-37	779353-501	G.							SHIELD ASSY, T76 link	1	6701-6760
									Attaching Parts		
-38	2600-7	G.							STUD, camloc (71286)	2	6701-6760
-39	2600-8	G.							STUD, camloc (71286)	3	6701-6760
-40	2600SW	G.							WASHER, camloc (71286)	5	6701-6760

Figura e particolare	NDR	1 2 3 4 5 6 7	DENOMINAZIONE	Quant.	Codice applicab.
230	778180-503	.	PANEL INSTL, fus sta 324 to 348 link ejection chute (NHA 849141-101) *(see fig. 98)*	1	
	778180-501	C.	PANEL INSTL, fus sta 324 to 348 link ejection chute (NHA 849141-101)	1	
-41	778180-23	. .	PANEL, fus sta 324 to 348 link ejection chute	1	
			Attaching Parts		
-42	NAS517-3-2	. .	SCREW (80205)	12	
-43	NAS517-3-3	. .	SCREW (80205)	5	
	778115-1	G. .	CHUTE INSTL, link ejection	1	6701-6760
-44	778115-47	G. . .	CHUTE ASSY, link ejection (NHA 850191-101)	1	6701-6760
			Attaching Parts		
-45	NAS517-3-2	G. . .	SCREW (80205) (NHA 850191-101)	9	6701-6760
-46	NAS517-3-3	G. . .	SCREW (80205) (NHA 850191-101)	5	6701-6760
	MS21042L3	G. . .	NUT (96906)	1	6701-6760
	779004-1	C.	CHUTE IKSTL, gun debris stub case (LH only) *(see fig. 38 for reqd)*	REF	
-47	774634-13	C. .	SPOTWELD ASSY, gun debris stub case chute	1	
-48	774792-1	C. .	CATCH, case stowage stub case chute spring	2	
			Attaching Parts		
-49	NAS517-3-2	C. .	SCREW (80205)	4	
-50	AN960D10	C. .	WASHER (88044)	4	
-51	MS21042L3	C. .	NUT (96906)	4	
-52	778935-1	C. .	COVER, gun stub case chute	1	
			Attaching Parts		
-53	NAS517-3-2	C. .	SCREW (80205)	11	
-54	NAS623-3-2	C. .	SCREW (80205)	28	
-55	NAS623-3-4	C. .	SCREW (80205)	8	
-56	NAS623-3-6	C. .	SCREW (80205)	2	
	AN960D10	C. .	WASHER (88044)	49	
-57	MS21042L3	C. .	NUT (96906)	39	
	850191-105	C.	CONVERSION KIT, gun to fuel tanks *(see fig. 260 for reqd)*	REF	
-58	778935-3	A. .	COVER, gun stub case chute	1	
			Attaching Parts		
-59	NAS517-3-2	A. .	SCREW (80205)	11	
-60	NAS623-3-2	A. .	SCREW (80205)	34	
-61	NAS623-3-4	A. .	SCREW (80205)	8	
-62	NAS623-3-6	A. .	SCREW (80205)	5	
	AN960D10	A. .	WASHER (88044)	58	
-63	MS21042L3	A. .	NUT (96906)	48	
-64	793490-1	B. .	COVER, link ejection chute pan	1	
			Attaching Parts		
-65	NAS603-6	B. .	SCREW (80205)	6	
-66	MS21042L3	B. .	NUT (96906)	6	
	NAS623-3-2	. .	SCREW (80205)	7	
	850688-103	D.	STRUCTURE INSTL, gun bay sparrow *(see fig. 30 for reqd)*	REF	
-67	851779-101	D. .	COVER, gun stub case chute	1	
			Attaching Parts		
-68	NAS623-3-2	D. .	SCREW (80205)	6	
-69	MS21042L3	D. .	NUT (96906)	6	
-70	850689-101	D. .	MOUNTING BRACKET, sparrow transmitter	1	
-71	850690-101	D. .	FILLED	1	
			Attaching Parts		
-72	NAS623-3-7	D. .	SCREW (80205)	3	
-73	NAS623-3-8	D. .	SCREW (80205)	1	
-74	NAS623-3-9	D. .	SCREW (80205)	1	

Figura e particolare	NDR	1 2 3 4 5 6 7	DENOMINAZIONE	Quant.	Codice applicab.
230-75	850694-101	D.	MOUNTING BRACKET, sparrow transmitter	1	
-76	850700-101	D.	CLIP	1	
-77	850700-102	D.	CLIP	1	
			Attaching Parts		
-78	NAS623-3-3	D.	SCREW (80205)	8	
-79	NAS623-3-7	D.	SCREW (80205)	6	
-80	MS21042L3	D.	NUT (96906)	8	
-81	850703-101	D.	MOUNTING BRACKET, sparrow transmitter	1	
-82	850701-101	D.	CLIP	1	
-83	850701-102	D.	CLIP	1	
			Attaching Parts		
-84	NAS623-3-3	D.	SCREW (80205)	8	
-85	NAS623-3-7	D.	SCREW (80205)	6	
-86	MS21042L3	D.	NUT (96906)	8	
-87	850706-101	D.	MOUNTING BRACKET, sparrow transmitter	1	
			Attaching Parts		
-88	NAS623-3-18	D.	SCREW (80205) *(see fig. 226)*	1	
-88A	NAS623-4-18	D.	SCREW (80205) *(see fig. 226)*	1	
-89	NAS623-4-22	D.	SCREW (80205)	2	
-89A	850707-101	D.	SPACER	1	
-89B	850707-103	D.	SPACER	1	
-90	MS21042L4	D.	NUT (96906)	1	
	850753-103	D.	STRUCTURE INSTL, gun bay sparrow power supply modulator *(see fig. 30 for reqd)*	REF	
-91	850747-101	D.	BRACKET, power supply modulator instl	1	
-92	850750-101	D.	BRACKET, power supply modulator instl	1	
			Attaching Parts		
-93	NAS1103-6	D.	BOLT (80205)	2	
-94	NAS623-3-3	D.	SCREW (80205)	3	
-95	NAS623-3-4	D.	SCREW (80205)	4	
-96	MS21042L3	D.	NUT (96906)	5	
-97	850748-101	D.	BRACKET, power supply modulator instl	1	
-98	850751-101	D.	BRACKET, power supply modulator instl	1	
			Attaching Parts		
-99	NAS623-3-3	D.	SCREW (80205)	2	
-100	NAS623-3-4	D.	SCREW (80205)	2	
-101	NAS1103-6	D.	BOLT (80205)	4	
-102	MS21042L3	D.	NUT (96906)	6	
-103	850752-101	D.	DECAL, power supply modulator	1	
	850890-103	D.	STRUCTURE INSTL, klystron tuners and firing control relay box *(see fig. 30 for reqd)*	REF	
-104	850891-101	D.	PAN, fire control relay box mounting	1	
-105	850894-101	D.	BRACKET, fire control relay box mounting	1	
-106	850895-101	D.	BRACKET, fire control relay box mounting	1	
			Attaching Parts		
-107	NAS623-3-1	D.	SCREW (80205)	3	
-108	NAS623-3-2	D.	SCREW (80205)	6	
-109	NAS623-3-4	D.	SCREW (80205)	5	
-110	MS21042L3	D.	NUT (96906)	3	
-111	850898-101	D.	BRACKET, tuning drive mounting	1	
-112	850899-101	D.	BRACKET, tuning drive mounting	1	
			Attaching Parts		
-113	NAS1103-4	D.	BOLT (80205)	8	

Figura e particolare	NDR	1 2 3 4 5 6 7 DENOMINAZIONE	Quant.	Codice applicab.
230	850191-101	C. CONVERSION KIT, sparrow to gun *(see fig. 260 for reqd)*	REF	
	FL0677-101	H. . CHUTE INSTL, link ejection (A0019)	1	
-114	1312B3112	H. . ADAPTER, 20 mm ejection chute (76793) (Lockheed spec dwg 601036-3) (see T.O. 11W1-2-9-3)	1	
-115	FL0676-101	H. . CHUTE, link ejection (A0019)	1	
-118	FL0679-101	H. . COVER, chute ejection (A0019)	1	
		Attaching Parts		
-119	NAS517-3-2	H. . SCREW (80205)	9	
-120	NAS517-3-3	H. . SCREW (80205)	5	

A - All parts marked with letter A serve also to install fuel tanks in basic aircraft in lieu of bay conversion kit (NHA 777707-1) *(see fig. 38)*
B - All parts marked with letter B serve also to install fuel tanks in basic aircraft in lieu of bay conversion kit (NHA 775582-101) *(see fig. 38)*
C - Only for FB
D - Only for AWX
E - Removed per AA.1F-104-OT-647
F - Reqd per AA.1F-104-OT-647
G - Only for FB - Removed per AA.1F-104-OT-719A
H - Only for FB - Reqd per AA.1F-104-OT-719A
I - Only for AWX - Reqd per AA.1F-104-OT-759B
L - Only for FB - Reqd per AA.1F-104-OT-759B
M - Only for AWX - Removed per AA.1F-104-OT-759B
N - Only for FB - Removed per AA.1F-104-OT-759B

Figura e particolare	NDR	1 2 3 4 5 6 7 DENOMINAZIONE	Quant.	Codice applicab.
		WING PYLON EXTERNAL STORES MISCELLANEOUS EQUIPMENT		
231- 1	786545-1	A. JUMPER ASSY, pylon aero 7D rocket launcher *(see fig. 260 for reqd)*	REF	
- 2	CA3106B14S5SF42	A. . CONNECTOR, plug (aero 7D rocket laucher) (71468)	1	
- 3	CA2073-367	A. . CONNECTOR, receptacle (aero 7D rocket launcher) (71468)	1	
	793512-1	A. PISTON ASSY, pylon external stores *(see fig. 260 for reqd)*	REF	
- 4	MS28775-125	A. . PACKING (96906)	1	
- 5	790763-1	A. . SCREW, pylon store ejector piston	1	
- 6	MS28775-214	A. . PACKING (96906)	1	
- 7	790380-3	A. . PISTON, pylon external stores	1	
- 7A	LP565D428H8	A. . SCREW (03038)	1	
- 8	789012-1	A. NUT ASSY, pylon external stores retainer *(see fig. 260 for reqd)*	REF	
	789012-3	A. . NUT, pylon external stores retainer	1	
- 9	773603-1	A. . PELLET, pylon ejector piston locking	2	
-10	789508-1	A. WEIGHT ASSY, pylon stores balance *(see fig. 260 for reqd)*	REF	
-11	785423-3	A. BRACE ASSY, pylon external stores sway *(see fig. 260 for reqd)*	REF	
-12	785426-3	A. . BRACE, pylon external stores sway	1	
-13	785424-1	A. . FAIRING ASSY, pylon external stores sway brace	1	
-14	785424-2	A. . FAIRING ASSY, pylon external stores sway brace	1	
-15	782148-501	A. . BOLT ASSY, pylon external stores sway brace	2	
-16	NAS509-10	A. . NUT (80205)	2	
-17	793227-1	A. PLUG, rocket pod *(see fig. 260 for reqd)*	REF	
	851193-101	B. CONVERSION KIT, AIM-7N instl, BL104 pylon *(see fig. 260 for reqd)*	REF	
-18	107149A1	B. . LAUNCHER, sparrow AIM-7E (A1615) (alternate to 299509) (Lockheed spec dwg 671452-101) (see AA11-107149A1-4)	2	
	299509	B. . LAUNCHER, sparrow AIM-7E (49956) (alternate to 107149A1) (Lockheed spec dwg 671452-101)	REF	
	ARD446-1	B. . CARTRIDGE, stores ejection (aerno 93-0363) (89945) (see T.O. 11A6-1-7)	4	
-19	MAU-50/A	B. . BOMB RACK	2	
-20	3220-1	B. . EXPLOSIVE BOLT (06331)	4	
-21	MS20002C14	B. . WASHER (96906)	4	
-22	LS1588C16	B. . WASHER (36659)	4	

A - Only for FB
B - Only for AWX

Armament

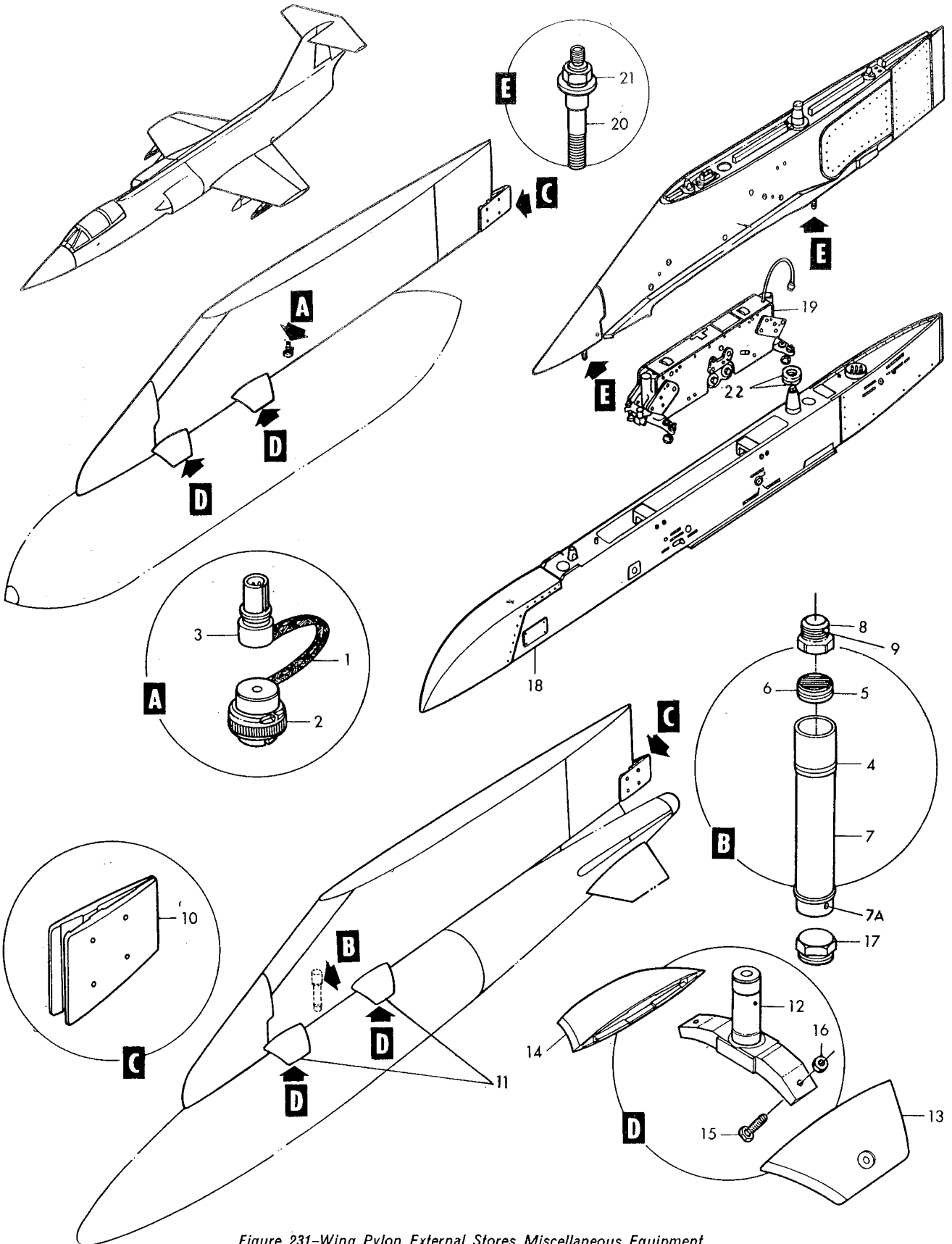

Figure 231–Wing Pylon External Stores Miscellaneous Equipment

Figura e particolare	NDR	1 2 3 4 5 6 7 DENOMINAZIONE	Quant.	Codice applicab.
		NOSE LANDING GEAR COMPLETE		
232	849176-101	. STRUT INSTL, nose landing gear (NHA 849141-101)	1	6701-6820
	849176-105	. STRUT INSTL, nose landing gear (NHA 849141-101)	1	6821-6865
	849176-109	. STRUT INSTL, nose landing gear (NHA 849141-101)	1	6866-
- 1	766926-1	. . CYLINDER ASSY, NLG uplock (see T.O. 9H2-3-41-3) *(see fig. 116)*	1	
		Attaching Parts		
- 2	NAS1104-8	. . BOLT (80205)	4	
- 3	AN960-416	. . WASHER (88044)	8	
- 4	MS21042L4	. . NUT (96906)	4	
- 5	MS20392-3C17	. . PIN (96906)	2	
- 6	AN960-416L	. . WASHER (88044)	2	
	MS24665-132	. . COTTER PIN (96906)	2	
- 7	771946-1	. . MATCHED LINKS, NLG uplock cylinder	1	
	771946-3	. . . LINK, NLG uplock cylinder (match comp do not stk sep)	2	
	MS24665-353	. . COTTER PIN (96906)	1	
- 8	AN320-10	. . NUT (88044)	1	
- 9	AN960-1016	. . WASHER (88044)	3	
-10	AN960-1016L	. . WASHER (88044)	1	
-11	762445-3	. . SPACER, NLG hook	1	
-12	762445-4	. . SPACER, NLG hook	1	
-13	762451	. . PIN, NLG uplock	1	
-14	772941-1	. . HOOK ASSY, NLG uplock *(see fig. 86)*	1	
-15	772941-3	. . . HOOK, NLG uplock	1	
-16	MS15001-1	. . . FITTING (lubrication) (96906)	2	
-17	726209-3	. . . BEARING, uplock hook	2	
	MS24665-283	. . COTTER PIN (96906)	3	
-18	AN320-6	. . NUT (88044)	3	
-19	AN960-616	. . WASHER (88044)	7	
-20	AN960-616L	. . WASHER (88044)	1	
-21	NAS1106-14D	. . BOLT (80205)	1	
-22	NAS1106-17D	. . BOLT (80205)	1	
-23	NAS1106-22D	. . BOLT (80205)	1	
-24	773435-1	. . LEVER, NLG downlock	1	
-25	771179-1	. . CYLINDER ASSY, NLG actuating (see T.O. 9H2-2-36-23) *(see fig. 116)*	1	
-26	MS21042L4	. . NUT (96906)	1	
-27	NAS623-4-22	. . SCREW (80205)	1	
-29	MS15001-1	. . FITTING (lubrication) (96906)	2	
-30	726062	. . PLUG, mounting pin	2	
-31	786307-1	. . SHAFT, NLG trunnion bearing	2	
-32	789274-1	. . SHIM, NLG trunnion	4	
-33	761233-505	. . STRUT ASSY, NLG drag *(see fig. 233)*	1	
	849176-103	. . STRUT ASSY, NLG	1	6701-6820
	849176-107	. . STRUT ASSY, NLG	1	6821-6865
	849176-111	. . STRUT ASSY, NLG	1	6866-
-34	849175-101	. . . STRUT ASSY, NLG shock (see T.O. 4S2-35-4)	1	6701-6820
	849175-105	. . . STRUT ASSY, NLG shock (see separate pub. when available)	1	6821-6865
	849175-109	. . . STRUT ASSY, NLG shock (see separate pub. when available)	1	6866-
-35	NAS1106-70D	. . . . BOLT (80205)	1	
-35A	AN960D616	A. . . . WASHER (88044)	1	
-36	MS21042L6	. . . . NUT (96906)	1	
-37	762006	. . . . SCREW, NLG shock	1	
-38	AN316-5R	. . . . NUT (88044)	1	
-39	AN320-8	. . . . NUT (88044)	1	
	MS24665-285	. . . . COTTER PIN (96906)	1	
-40	AN310-5	. . . . NUT (88044)	1	
-41	762005	. . . . WASHER, NLG shock	1	
	MS24665-134	. . . . COTTER PIN (96906)	1	
-42	MS28889-1	. . . . VALVE (96906)	1	
	MS24665-283	. . . . COTTER PIN (96906)	1	

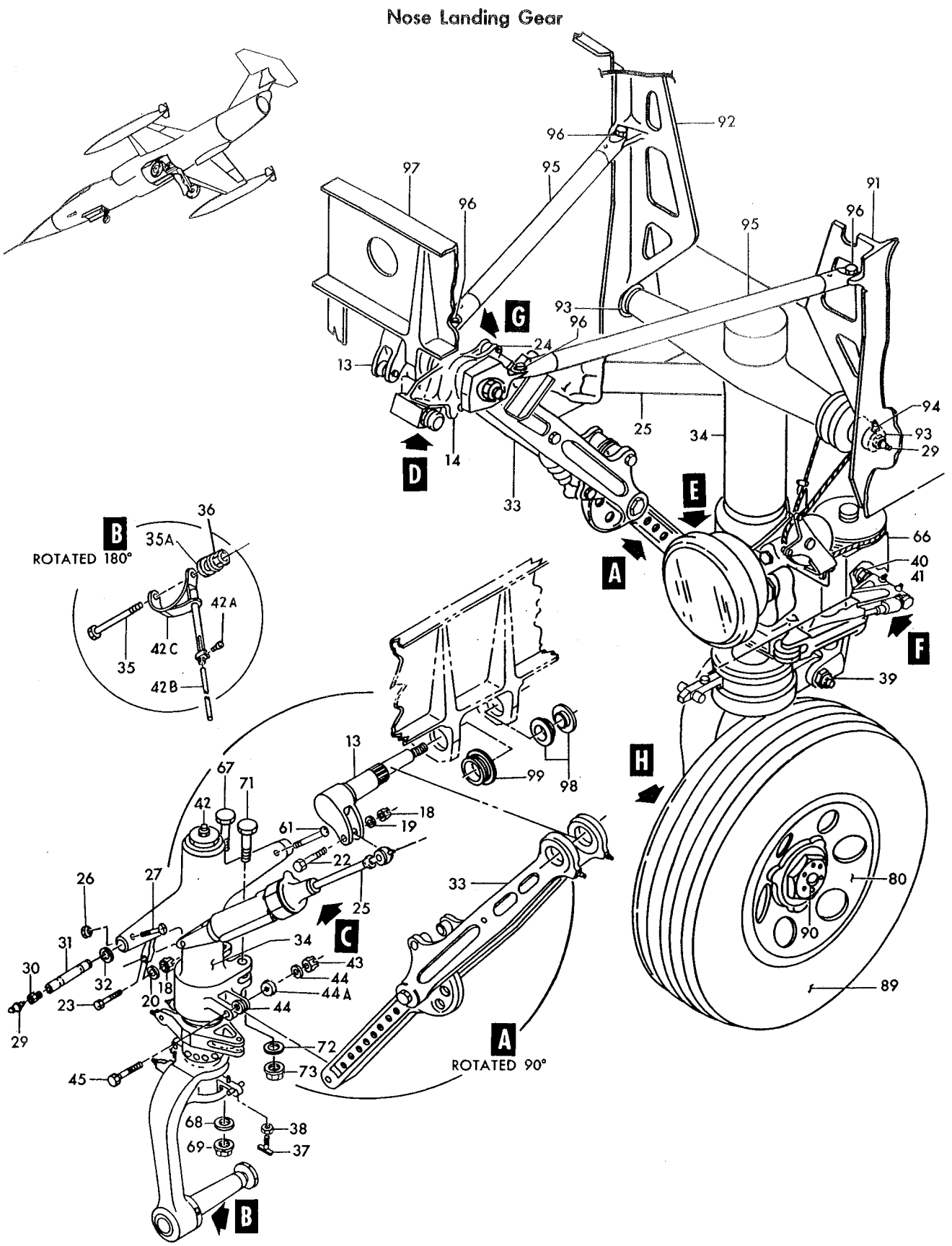

Figure 232—Nose Landing Gear Complete (Sheet 1 of 3)

Nose Landing Gear

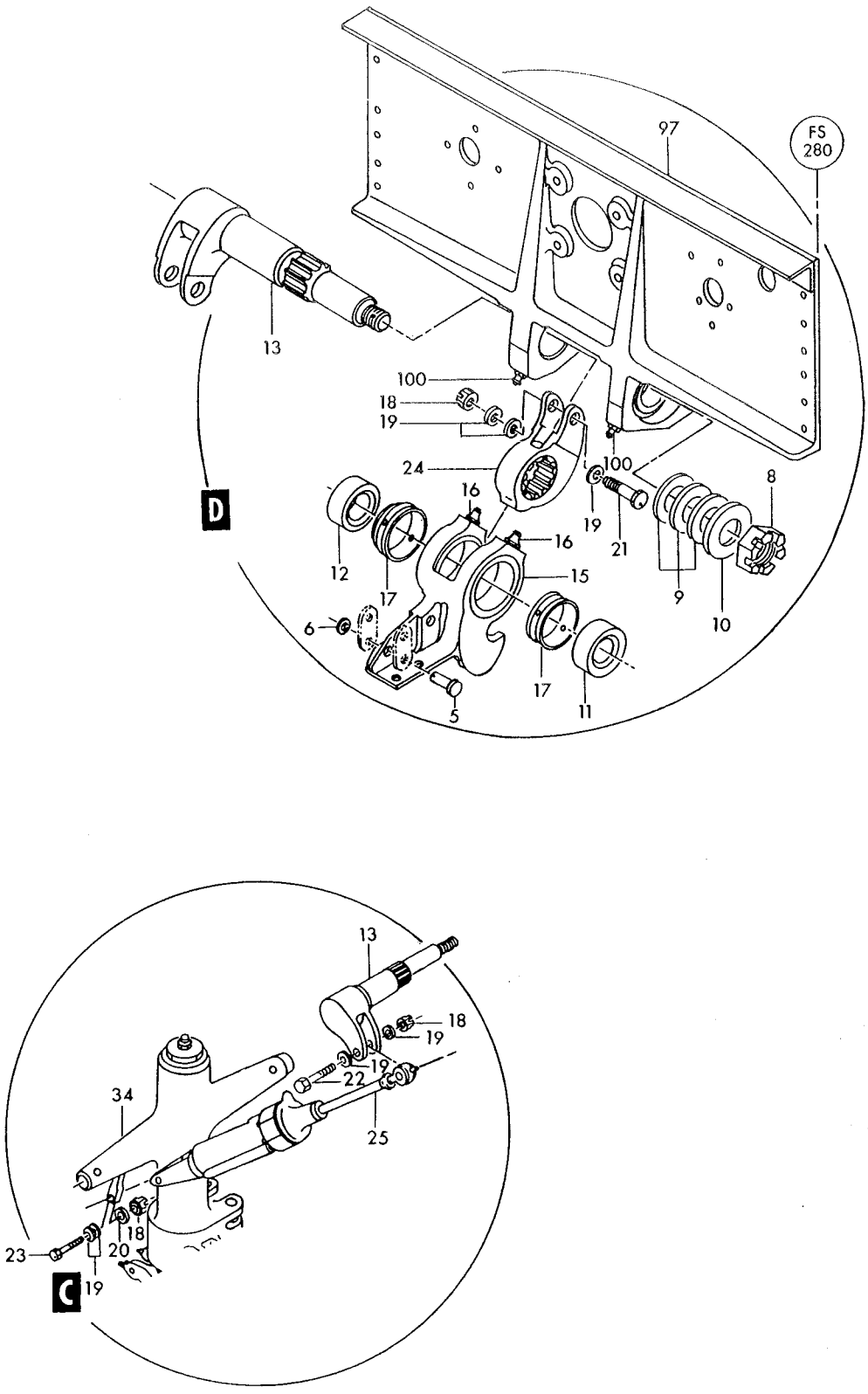

Figure 232—Nose Landing Gear Complete (Sheet 2 of 3)

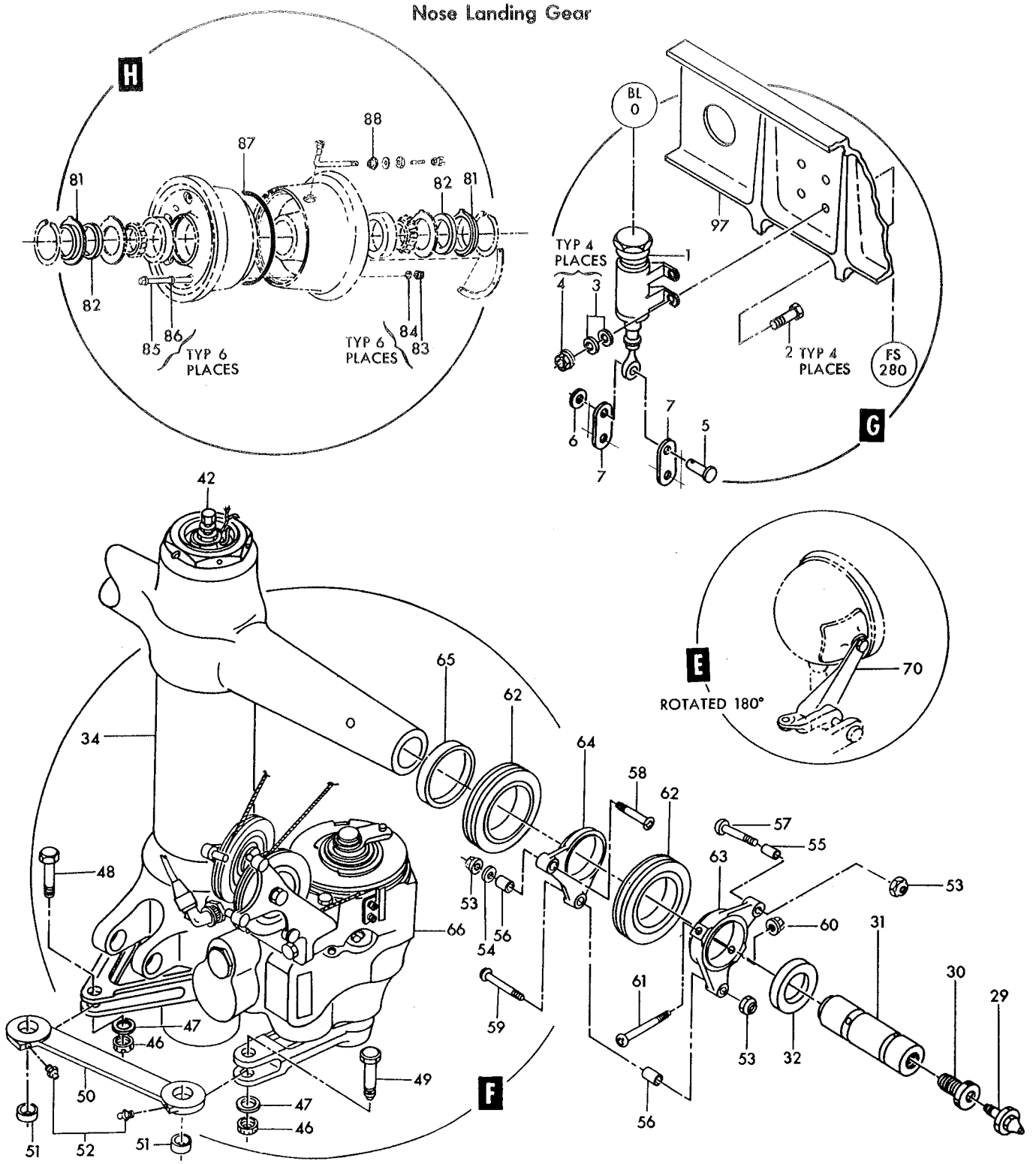

Figure 232— Nose Landing Gear Complete (Sheet 3 of 3)

Figura e particolare	NDR	DENOMINAZIONE	Quant.	Codice applicab.
232	849152-101	STATIC GROUND ASSY, NLG	1	6701-6790
-42A	AN502-10-8	SCREW (88044)	1	6701-6790
-42B	797644-101	ROD, static ground	1	6701-6790
-42C	849152-103	CRADLE, weldment	1	6701-6790
-43	AN320-7	NUT (88044)	1	
-44	AN960-716L	WASHER (88044)	2	
-44A	AN960-716	WASHER (88044)	1	6721-
-45	726159-3	BOLT, NLG drag strut	1	
-46	AN320-5	NUT (88044)	2	
-47	AN960-516	WASHER (88044)	2	
-48	NAS1105-12D	BOLT (80205)	1	
-49	NAS1105-14D	BOLT (80205)	1	
	761876	LINK ASSY, NLG steering	1	
-50	761876-3	LINK	1	
-51	LS5	BEARING, roller (73134)	2	
-52	NAS516-1	FITTING (80205)	2	
-53	MS21042L3	NUT (96906)	3	
-54	AN960D10	WASHER (88044)	1	
-55	NAS42DD6-36	SPACER (80205)	1	6701-6840
	NAS42DD6-30	SPACER (80205)	1	6841-
-56	NAS42DD6-40	SPACER (80205)	2	
-57	NAS623-3-14	SCREW (80205)	1	6701-6840
	NAS623-3-12	SCREW (80205)	1	6841-
-58	NAS623-3-16	SCREW (80205)	1	
-59	NAS623-3-20	SCREW (80205)	1	
-60	MS21042L4	NUT (96906)	1	
-61	NAS623-4-26	SCREW (80205)	1	
-62	762020	PULLEY ASSY, NLG trunnion *(see fig. 233)*	2	
-63	762018	SPACER, NLG trunnion pulley outer	1	
-64	762017	SPACER, NLG trunnion duter pulley	1	
-65	762019	SPACER, NLG trunnion inner pulley	1	
-66	8156-5	STEER DAMPER ASSY, NLG (A1384) (81400) (Lockheed spec dwg 668457-1) (see T.O. 4SA3-5-14) *(see fig. 116 and 236)*	1	
	5667-3	CABLE ASSY (A1384) (81400)	1	
		Attaching Parts		
-67	NAS1107-34D	BOLT (80205)	1	
-68	AN960-716	WASHER (88044)	1	
-69	MS21042L7	NUT (96906)	1	
	762117	LIGHT INSTL, taxi *(see fig. 199)*	1	
-70	762118	BRACKET, taxing light *(see fig. 199)*	1	
		Attaching Parts		
-71	NAS1107-36D	BOLT (80205)	1	
-72	AN960-716L	WASHER (88044)	1	
-73	MS21042L7	NUT (96906)	1	
	789425-1	PLUMBING INSTL, NLG *(see fig. 116)*	1	
	784691-5	WHEEL INSTL, nose landing gear (NHA 849138-101)	1	
	783440-101	WHEEL AND TIRE ASSY, 18X5-5 type VII static load 6200 lb	1	
-80	3-1018-3	WHEEL ASSY, 18X5-5 type VII static load 6200 lb (A2142) (97153) (Lockheed spec dwg 660186-101) (see T.O. 4W3-7-1063)	1	
		Partial Breakdown Follows		
-81	B56-210	RETAINER, offset felt (25472)	2	
-82	277-77	FELT, preformed mechanical (25472)	2	
-83	42FW624	NUT, external wrenching self-locking (56878)	6	
-84	MS20002-6	WASHER (96906)	6	
-85	NAS146-79	BOLT (80205)	6	
-86	MS20002C6	WASHER (96906)	6	
-87	AN6230B40	PACKING (88044)	1	
-88	TRRG43	GROMMET (25472)	1	

Figura e particolare	NDR	DENOMINAZIONE 1 2 3 4 5 6 7	Quant.	Codice applicab.
232-89	18X5X5	TIRE, tipe VII 14 ply rating static load 6200 lb (MIL-C-5041) (af dwg 59D513 and 60B501) (A0043) (25472) (Lockheed spec dwg 660187-3)	1	
-90	AN502-10-10	SCREW (88044)	1	
	760151-101	SUPPORT INSTL, NLG (LH only) *(see fig. 30 for reqd)*	REF	
	760151-3	SUPPORT ASSY, NLG	1	
-91	760033L	SUPPORT ASSY, NLG	1	
-92	760033R	SUPPORT ASSY, NLG	1	
-93	BSSR16004G	BEARING, self-aligning spherical (81376)	1	
-94	MS15001-3	FITTING (lubrication) (96906)	1	
-95	760042	TUBE ASSY, NLG drag link support	2	
		Attaching Parts		
-96	AN176H12	BOLT (88044)	4	
	AN960D616	WASHER (88044)	4	
	AN310-6	NUT (88044)	4	
		*		
	760151-25	SUPPORT ASSY, NLG	1	
-97	761283	SUPPORT ASSY, NLG drag link	1	
-98	726056-3	BUSHING, NLG link support	2	
-99	726057-3	BUSHING, NLG link support	1	
-100	MS15001-1	FITTING (lubrication) (96906)	2	

A - Reqd per AA.1F-104-OT-669A

Figura e particolare	NDR	DENOMINAZIONE 1 2 3 4 5 6 7	Quant.	Codice applicab.
		NOSE LANDING GEAR DRAG STRUT		
233- 1	761233-505	STRUT ASSY, NLG drag *(see fig. 232 for reqd)*	REF	
	MS24665-287	COTTER PIN (96906)	1	
- 2	AN320-8	NUT (88044)	1	
- 3	AN960-816	WASHER (88044)	2	
- 4	728397-1	BOLT, drag strut apex	1	
- 5	766982-501	STRUT ASSY, NLG lower drag	1	
- 6	726161-3	BEARING, drag strut lower	2	
- 7	726162-3	BEARING, drag strut upper	2	
- 8	MS15001-1	FITTING (lubrication) (96906)	3	
	MS24665-134	COTTER PIN (96906)	4	
- 9	AN320-5	NUT (88044)	2	
-10	AN960-516	WASHER (88044)	4	
-11	726210-3	BOLT, NLG drag strut	1	
-12	726210-4	BOLT, NLG drag strut	1	
-13	762393	ROD ASSY, downlock connecting	1	
-14	726206-3	BUSHING, connecting rod	2	
-14A	AN535-6-4	SCREW (88044)	2	
-15	MS21042L4	NUT (96906)	1	
-16	726514-3	BOLT, NLG downlock switch adjusting	1	
-17	AN320-4	NUT (88044)	1	
-18	AN960-416	WASHER (88044)	2	
-19	726211-3	BOLT, NLG drag strut	1	
-20	762231	LATCH ASSY, NLG doorlock	1	
-21	AN310-5	NUT (88044)	1	
-22	AN960-516	WASHER (88044)	1	
-23	AN175H32	BOLT (88044)	1	
-24	762091	STOP ASSY, NLG downlock	1	
-25	762093	NUT, downlock stop	1	
-26	762094	CYLINDER, downlock stop	1	
-27	762092	PISTON, NLG downlock stop	1	
-28	726282-3	SPRING, downlock stop	1	
-29	726281-3	EYEBOLT ASSY, NLG downlock stop	1	
-30	NAS513-6	WASHER (80205)	1	
-31	NAS509-6	NUT (80205)	1	
-32	726284-3	SPACER, downlock stop	1	
-33	762178	STRUT ASSY, NLG upper drag RH	1	
-34	726190-3	BUSHING, upper drag strut	1	
-35	726193-3	BEARING, upper drag strut	2	
-36	MS15001-1	FITTING (lubrication) (96906)	1	
-37	762177	STRUT ASSY, NLG upper drag LH	1	
-38	726189-3	BEARING, NLG drag strut	2	
-39	726190-3	BUSHING, upper drag strut	1	
-40	MS15001-1	FITTING (lubrication) (96906)	1	
-41	772940-1	BRACKET, NLG downlock switch	1	
		Attaching Parts		
-42	NAS623-3-11	SCREW (88044)	2	
-43	AN960-10	WASHER (88044)	2	
-44	MS21042L3	NUT (96906)	2	
		*		
-45	786002-1	SAFETY ASSY, NLG down position *(see fig. 261 for reqd)*	REF	

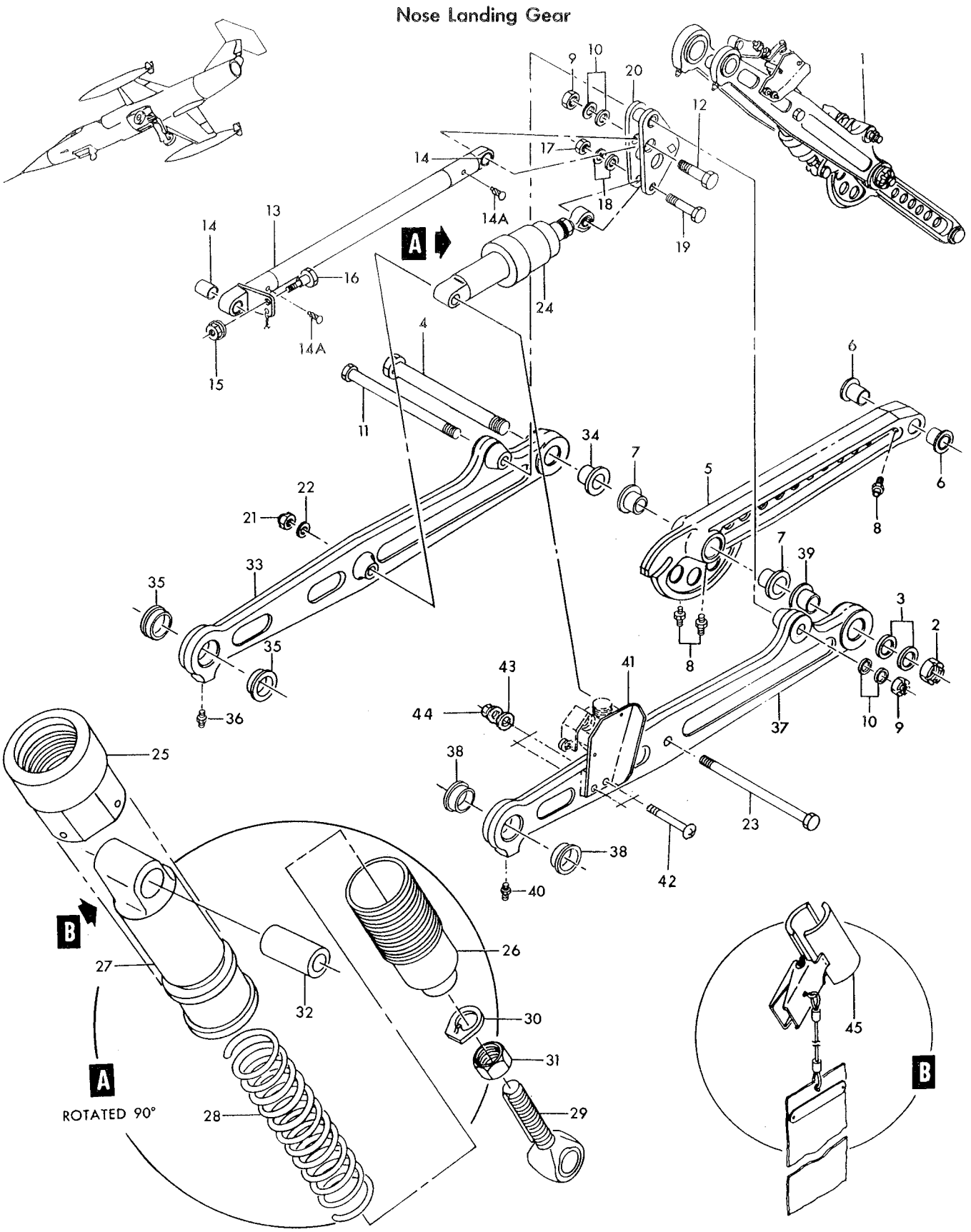

Figure 233—Nose Landing Gear Drag Strut

Figura e particolare	NDR	DENOMINAZIONE	Quant.	Codice applicab.
		NOSE LANDING GEAR DOORS AND ACTUATING MECHANISM		
234	779386-501	DOOR OPERATING MECHANISM INSTL, NLG (NHA 849141-101)	1	
-1	MS21042L4	NUT (96906)	2	
-2	AN174H11A	BOLT (88044)	2	
-3	MS21042L6	NUT (96906)	2	
-4	AN176H35	BOLT (88044)	2	
	779386-7	MECHANISM ASSY, NLG door operating	1	
-5	726167	SLEEVE, NLG door operating mechanism arm	2	
-6	MS21042L5	NUT (96906)	3	
-7	MS20002-5	WASHER (96906)	2	
-8	AN5-21	BOLT (88044)	1	
-9	726166	SLEEVE, NLG door operating mechanism cam holder	1	
-10	AN960C616	WASHER (88044)	1	
-11	764896	BOLT ASSY, NLG door operating mechanism shoulder	2	
-12	764896-3	BOLT, NLG door operating mechanism	1	
-13	MS15001-1	FITTING (lubrication) (96906)	1	
-14	MS21042L4	NUT (96906)	2	
-15	AN174H17A	BOLT (88044)	2	
-16	762384-4	TURNBUCKLE ASSY, NLG door operating mechanism	2	
-17	BRE4095L2	BEARING, rod end (81376)	2	
-18	MS21042L6	NUT (96906)	2	
-19	726172	TURNBUCKLE, NLG door mechanism	1	
-20	52-1650-02	NUT, self-looking flush (72962)	2	
-21	NAS517-3-31	SCREW (80205)	2	
	785448-1	ARM ASSY, NLG door operating mechanism	2	
-22	MS21042L4	NUT (96906)	1	
-23	NAS428-4-16	BOLT (80205)	1	
-24	AN316-4R	NUT (88044)	1	
-25	NAS516-1	FITTING (lubrication) (80205)	1	
	785448-3	ARM ASSY, NLG door operating mechanism	1	
-26	785448-5	ARM, NLG door operating mechanism	1	
-27	726169	BUSHING, NLG door operating mechanism arm	2	
-28	726170	BUSHING, NLG door operating mechanism arm pivot	2	
-29	MS21042L4	NUT (96906)	2	
-30	AN960-416	WASHER (88044)	2	
-31	AN24-16A	BOLT (88044)	2	
-32	726163	BUSHING, NLG operating mechanism	2	
-33	780167-1	CARTRIDGE ASSY, NLG door	2	
-34	780163-1	PISTON ASSY, NLG door spring cartridge	1	
-35	726180	BUSHING, NLG door spring piston	1	
-36	780164-3	SPACER, NLG door cartridge	1	
-37	LS1369-9	SNAP RING (36659)	1	
-38	MS28776-9	SCRAPER (96906)	1	
-39	780166-3	SPRING, NLG door cartridge	1	
-40	780165-3	CYLINDER, NLG door spring	1	
-41	779244-1	CAM ASSY, NLG door operating mechanism	2	
-42	MS15001-1	FITTING (lubrication) (96906)	1	
-43	779245-1	CAM, NLG door mechanism	1	
		Attaching Parts		
-44	NAS1203-6	SCREW (80205)	10	
-45	NAS1203-7	SCREW (80205)	2	
-46	AN960D10	WASHER (88044)	10	
-47	MS21042L3	NUT (96906)	12	
		*		
	779244-4	CAM HOLDER ASSY, NLG door operating mechanism	1	
-48	779244-3	CAM holder, NLG door operating mechanism	1	
-49	726168	BUSHING, NLG door operating mechanism cam holder	2	
	760787-501	DOOR INSTL, nose landing gear (NHA 849141-101)	1	
-50	MS25083-2BB2	JUMPER (96906)	2	
-51	MS25083-2BB3	JUMPER (96906)	2	

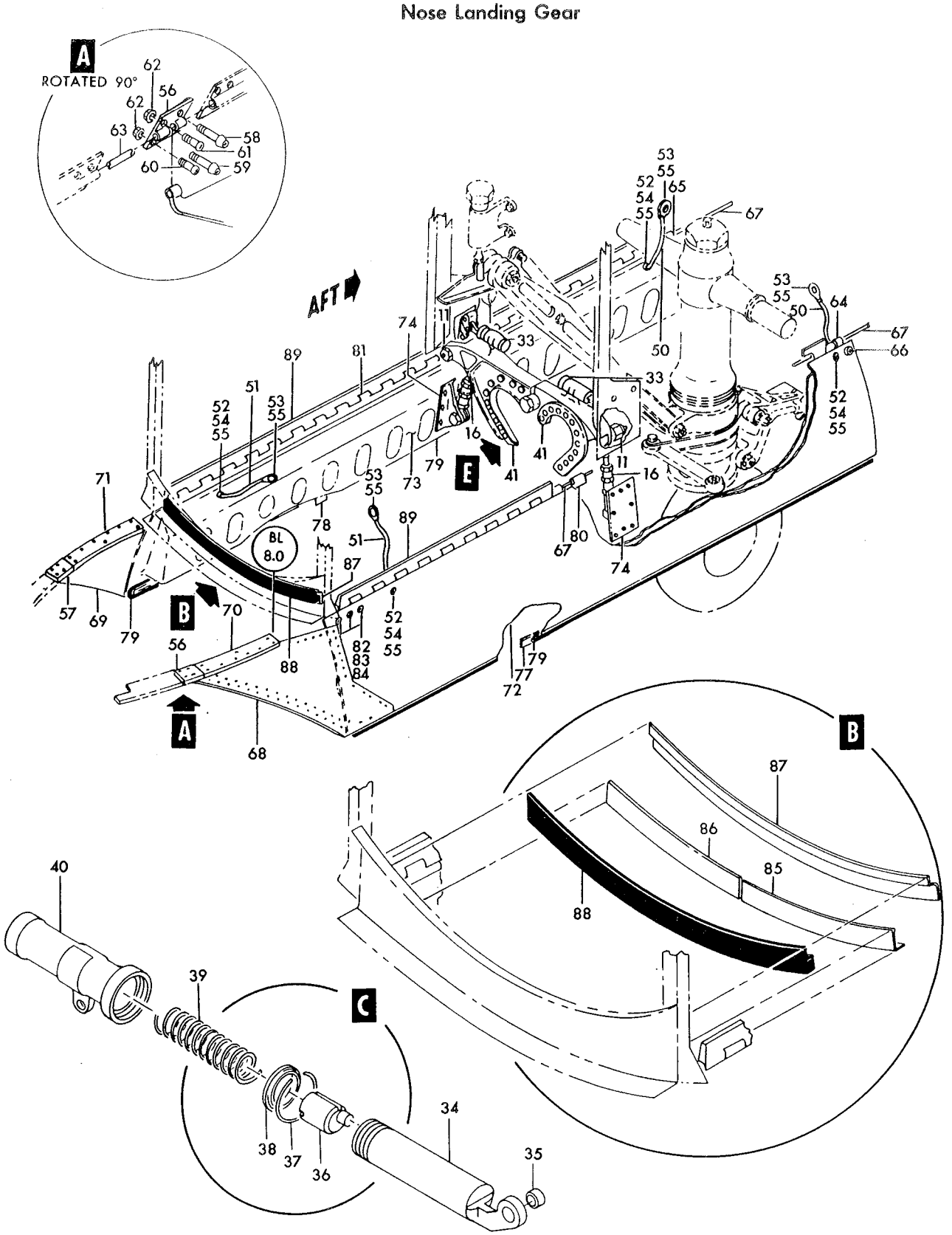

Figure 234—Nose Landing Gear Doors and Actuating Mechanism (Sheet 1 of 2)

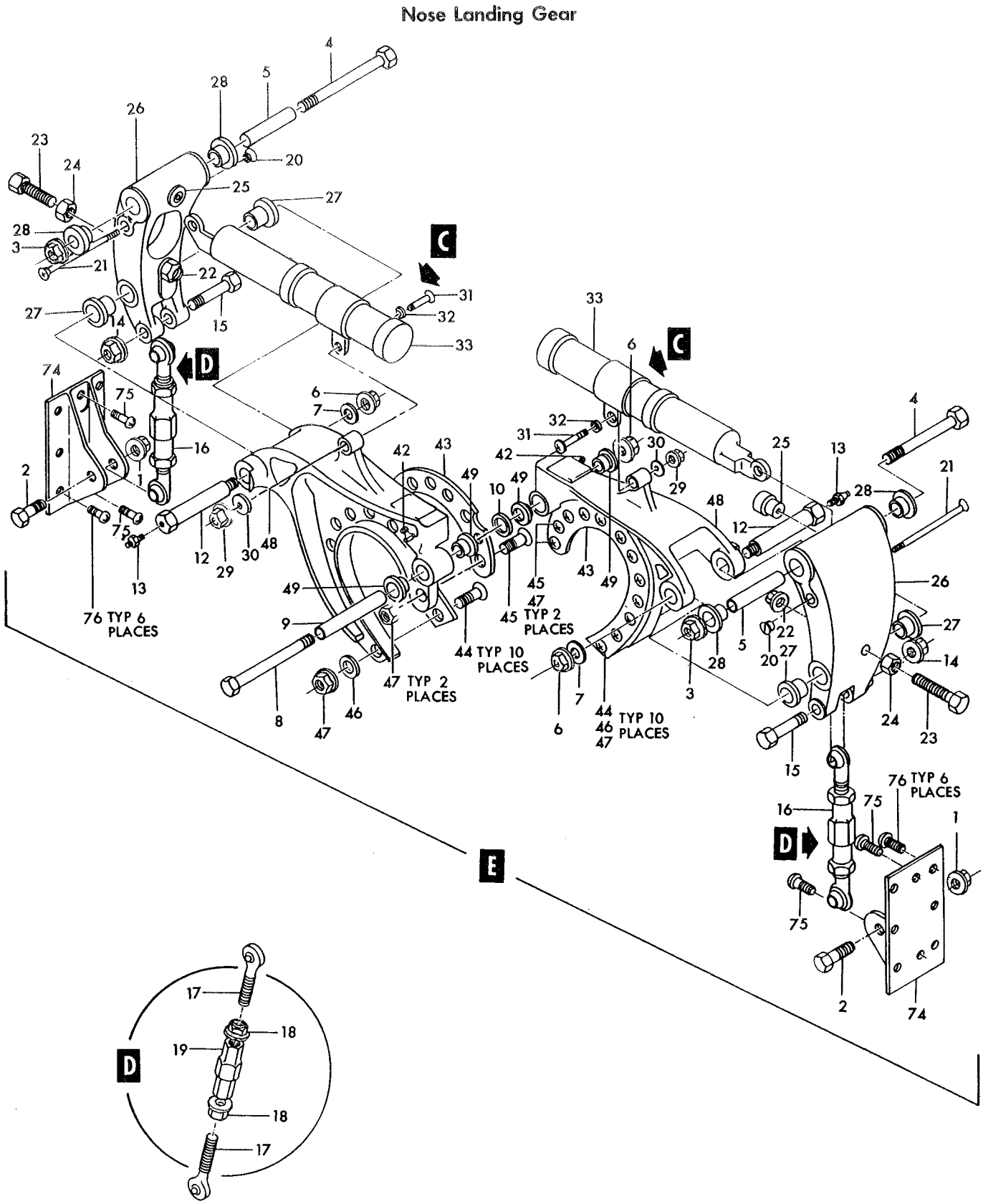

Figure 234—Nose Landing Gear Doors and Actuating Mechanism (Sheet 2 of 2)

Figura e particolare	NDR	DENOMINAZIONE	Quant.	Codice applicab.
		Attaching Parts		
234-52	NAS1203-4	SCREW (80205)	1	
-53	AN520-10R8	SCREW (88044)	1	
-54	AN960D10	WASHER (88044)	1	
-55	MS21042L3	NUT (98906)	2	
-56	784599-1	HINGE, runway barrier tape deflector (LH)	1	
-57	784599-2	HINGE, runway barrier tape deflector (RH)	1	
		Attaching Parts		
-58	F200-5	JO-BOLT (98524)	1	
-59	F200-7	JO-BOLT (98524)	1	
-60	NAS517-3-3	SCREW (80205)	1	
-61	NAS517-3-4	SCREW (80205)	1	
-62	MS21042L3	NUT (96906)	2	
-63	760787-27	PIN, NLG deflector hinge	2	
-64	760787-55	RETAINER, NLG hinge pin (LH)	1	
-65	760787-56	RETAINER, NLG hinge pin (RH)	1	
		Attaching Parts		
-66	AN507-832R8	SCREW (88044)	1	
	AN960D8	WASHER (88044)	1	
	MS21042L08	NUT (96906)	1	
-67	760787-16	PIN, NLG door hinge	2	
-68	776441-1	DEFLECTOR ASSY, runway barrier tape (LH)	1	
-69	776441-2	DEFLECTOR ASSY, runway barrier tape (RH)	1	
-70	784600-1	FAIRING, runway barrier deflector hinge	1	
-71	784600-2	FAIRING, runway barrier deflector hinge	1	
-72	760787-33	DOOR ASSY, NLG (LH)	1	
-73	760787-34	DOOR ASSY, NLG (RH)	1	
-74	761648-3	FITTING, NLG door	1	
		Attaching Parts		
-75	NAS623-3-2	SCREW (80205)	2	
-76	NAS623-3-4	SCREW (80205)	6	
-77	760787-8L	RETAINER, NLG door seal	1	
-78	760787-8R	RETAINER, NLG door seal	1	
-79	760787-11	SEAL, NLG door	1	
-80	785048-1	HALF HINGE, NLG door LH	1	
-81	785048-2	HALF HINGE, NLG door RH	1	
		Attaching Parts		
-82	NAS1203-5	SCREW (80205)	3	
-83	AN960D10	WASHER (88044)	3	
-84	MS21042L3	NUT (96906)	3	
-85	760787-9L	STRIKER, NLG door LH	1	
-86	760787-9R	STRIKER, NLG door RH	1	
	760787-5	SEAL INSTL, NLG door *(see fig. 30 for reqd)*	REF	
-87	760787-13	RETAINER, NLG door seal	1	
-88	760787-10	SEAL, NLG door	1	
-89	760251	HALF HINGE, NLG door *(see fig. 38 for reqd)*	REF	

Figura e particolare	NDR	DENOMINAZIONE 1 2 3 4 5 6 7	Quant.	Codice applicab.
		NOSE LANDING GEAR STEERING CONTROLS FUSELAGE STATION 205 TO 270		
235-1	761026L	HORN, rudder control *(see fig. 65 for reqd)*	REF	
-2	761026R	HORN, rudder control *(see fig. 65 for reqd)*	REF	
-3	760475-3L	BRACKET ASSY, fus sta 209 flight control pulley *(see fig. 83 for reqd)*	REF	6701-6720
	760475-103	BRACKET ASSY, fus sta 209 flight control pulley LH *(see fig. 83 for reqd)*	REF	6721-
-4	760475-3R	BRACKET ASSY, fus sta 209 flight control pulley *(see fig. 83 for reqd)*	REF	6701-6720
	760475-104	BRACKET ASSY, fus sta 209 flight control pulley RH *(see fig. 83 for reqd)*	REF	6721-
	772092-1	SPRING INSTL, nose steering overload (LH) *(see fig. 63 for reqd)*	REF	
	772092-3	SPRING INSTL, nose steering overload (RH) *(see fig. 63 for reqd)*	REF	
-5	772091-1	TUBE, nose steering overload	1	
-6	AN742D24	CLAMP (88044)	2	
		Attaching Parts		
-7	AN501A10-16	SCREW (88044)	1	
-8	AN502-10-14	SCREW (88044)	1	
-9	LS607-14	SPACER, phenolic nose steering overload (36659)	1	
-10	LS607-10	SPACER, phenolic nose steering overload (36659)	1	
	MS27130-20K	NUT (96906)	1	
		✡		
	772089-1	SPRING ASSY, nose steering overload (LH)	1	6701-6725
	772089-101	SPRING ASSY, nose steering overload (LH)	1	6726-
	772089-3	SPRING ASSY, nose steering overload (RH)	1	
-11	772093-5	CABLE ASSY, forward LH nose wheel steering *(see fig. 236)*	1	6701-6725
	772093-145	CABLE ASSY, forward LH nose wheel steering *(see fig. 236)*	1	6726-
-11A	772093-9	CABLE ASSY, forward RH nose wheel steering *(see fig. 236)*	1	
-12	MS20668-4	TERMINAL (96906) (reqd on 772093-9)	1	
	MS20668-4	TERMINAL (96906) (reqd on 772093-5)	1	
-13	AN669S4RH	TERMINAL (88044)	1	
-14	772089-7	PIN, nose wheel steering	1	
-15	772089-5	SPRING ASSY, nose wheel steering	1	
-16	771984-1	SPRING, nose steering overload	1	
-17	772088-1	TUBE ASSY, nose steering overload spring	1	
-18	772090-1	RETAINER, nose steering overload spring	1	
-19	MS20664C4	TERMINAL (96906)	1	
	772093-1	CABLE ASSY, nose steering overload spring	1	
-20	772093-3	CABLE	1	
-21	LCB125	CABLE END (83548)	1	
	761565L	PULLEY INSTL, fus sta 249 nose wheel steering controls *(see fig. 63 for reqd)*	REF	
	761565R	PULLEY INSTL, fus sta 249 nose wheel steering controls *(see fig. 63 for reqd)*	REF	
-22	761565-5	PULLEY ASSY, fus sta 249 nose wheel steering controls	1	
-23	761565-6	PULLEY ASSY, fus sta 249 nose wheel steering controls	1	
		Attaching Parts		
	NAS623-3-4	SCREW (80205)	4	
	AN960D10	WASHER (88044)	4	
	MS21042L3	NUT (96906)	4	
		✡		
-24	NAS1105-14D	BOLT (80205)	1	
-25	AN960D516	WASHER (88044)	3	
-26	AN320-5	NUT (88044)	1	
	MS24665-134	COTTER PIN (96906)	1	
-27	NAS427K13	PIN (80205)	1	
-28	MS20220-1	PULLEY (96906)	1	
-29	761564L	BRACKET ASSY, fus sta 249 nose wheel steering controls (LH)	1	
	761564R	BRACKET ASSY, fus sta 249 nose wheel steering control (RH)	1	
	761968L	GUIDE INSTL, fus sta 255 cable *(see fig. 63 for reqd)*	REF	
	761968R	GUIDE INSTL, fus sta 255 cable *(see fig. 63 for reqd)*	REF	
-30	761966	GUIDE, nose wheel steering cable	2	
		Attaching Parts		
	AN515-8R14	SCREW (88044)	2	
	AN960D8	WASHER (88044)	2	
	MS21042L08	NUT (96906)	2	
		✡		

Nose Landing Gear

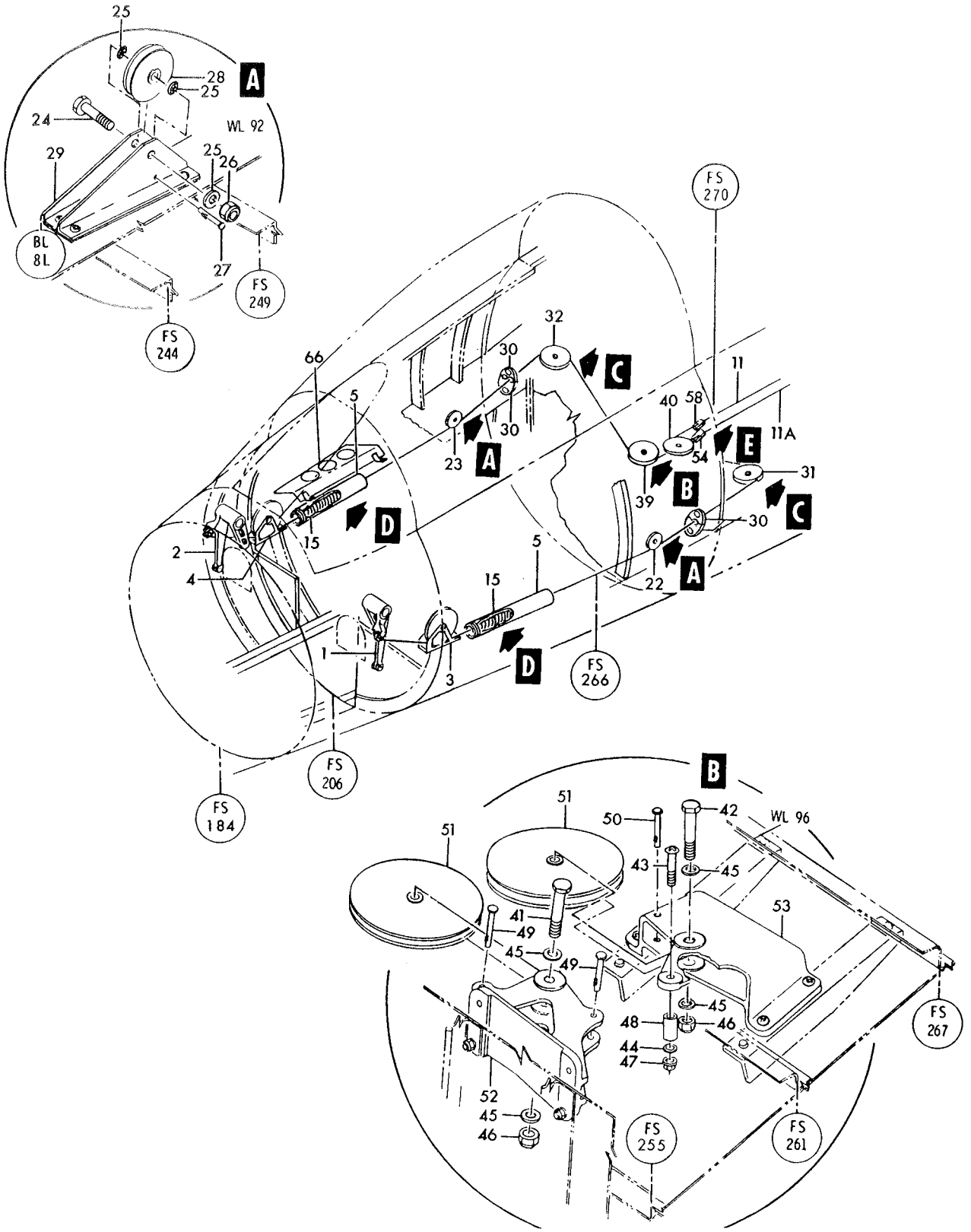

Figure 235—Nose Landing Gear Steering Controls Fuselage Station 205 to 270 (Sheet 1of 2)

Nose Landing Gear

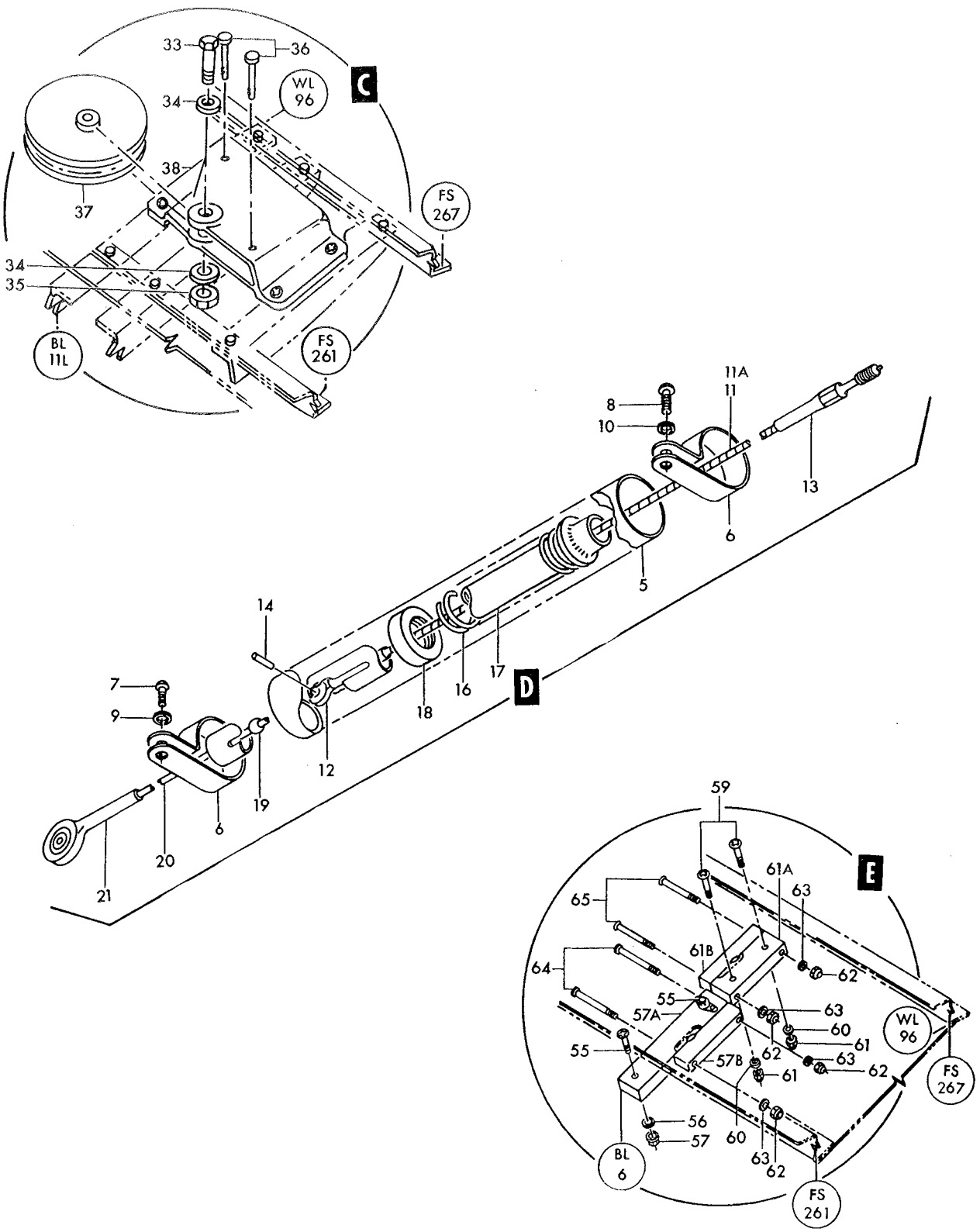

Figure 235—Nose Landing Gear Steering Controls Fuselage Station 205 to 270 (Sheet 2 of 2)

Figura e particolare	NDR	1 2 3 4 5 6 7 DENOMINAZIONE	Quant.	Codice applicab.
235	761047-3L	BRACKET INSTL, fus sta 264 nose wheel steering control *(see fig. 63 for reqd)*	REF	6701-6740
	761047-101	BRACKET INSTL, fus sta 264 nose wheel steering control *(see fig. 63 for reqd)*	REF	6741-
	761047-3R	BRACKET INSTL, fus sta 264 nose wheel steering control *(see fig. 63 for reqd)*	REF	
-31	761047-9	BRACKET ASSY, nose wheel steering control	1	6701-6740
	761047-103	BRACKET ASSY, nose wheel steering control	1	6741-
-32	761047-10	BRACKET ASSY, nose wheel steering control	1	
		Attaching Parts		
	NAS623-3-7	SCREW (80205)	4	
	AN960D10	WASHER (88044)	4	
	MS21042L3	NUT (96906)	4	
-33	NAS1105-20D	BOLT (80205)	1	6701-6740
	NAS1205-20D	BOLT (80205)	1	6741-
-34	AN960D516	WASHER (88044)	2	6701-6740
	AN960D516	WASHER (88044)	1	6741-
-35	AN320-5	NUT (88044)	1	
	MS24665-134	COTTER PIN (96906)	1	
-36	NAS427K16	PIN (80205)	2	
-37	MS20220-3	PULLEY (96906)	1	
-38	761049L	BRACKET, nose steering (LH)	1	6701-6740
	761049-101	BRACKET, nose steering (LH)	1	6741-
	761049R	BRACKET, nose steering (RH)	1	
	761558-5	BRACKET INSTL, fus sta 261 nose wheel steering control pulley *(see fig. 63 for reqd)*	REF	
			REF	
-39	761558-11	BRACKET ASSY, control	1	
-40	761558-13	BRACKET ASSY, control	1	
		Attaching Parts		
	NAS623-3-6	SCREW (80205)	4	
	AN960D10	WASHER (88044)	8	
	MS21042L3	NUT (96906)	4	
-41	NAS1105-19D	BOLT (80205) (reqd on 761558-11)	1	
-42	NAS1105-24D	BOLT (80205) (reqd on 761558-13)	1	
-43	AN520-10R20	SCREW (88044) (reqd on 761558-13)	1	
-44	AN960D10	WASHER (88044) (reqd on 761558-13)	1	
-45	AN960D516	WASHER (88044)	2	
-46	AN320-5	NUT (88044)	1	
	MS24665-134	COTTER PIN (96906)	1	
-47	MS21042L3	NUT (96906) (reqd on 761558-13)	1	
-48	NAS43DD3-48	SPACER (80205) (reqd on 761558-13)	1	
-49	NAS427K16	PIN (80205) (reqd on 761558-11)	2	
-50	NAS427K20	PIN (80205) (reqd on 761558-13)	1	
-51	MS20220-3	PULLEY (96906)	1	
-52	761557	BRACKET, nose steering control (reqd on 761558-11)	1	
-53	761556	BRACKET, nose steering control (reqd on 761558-13)	1	
	763923-3	FAIRLEAD INSTL, fus sta 261 to 267 nose wheel steering cable *(see fig. 63 for reqd)*	REF	
-54	763924	FAIRLEAD ASSY, fus sta 261 nose steering cable	1	
		Attaching Parts		
-55	AN515-8R12	SCREW (88044)	2	
-56	AN960D8	WASHER (88044)	1	
-57	MS21042L08	NUT (96906)	1	
-57A	763924-3	FAIRLEAD, nose wheel steering cable (match comp do not stk sep)	1	
-57B	763924-4	FAIRLEAD, nose wheel steering cable (match comp do not stk sep)	1	
-58	763954	FAIRLEAD ASSY, fus sta 267 nose steering cable	1	
		Attaching Parts		
-59	AN515-8R12	SCREW (88044)	2	
-60	AN960D8	WASHER (88044)	2	
-61	MS21042L08	NUT (96906)	2	

Figura e particolare	NDR	1 2 3 4 5 6 7 DENOMINAZIONE	Quant.	Codice applicab.
235-61A	763954-3	. . . FAIRLEAD, nose steering cable (match comp do not stk sep) . .	1	
-61B	763954-4	. . . FAIRLEAD, nose steering cable (match comp do not stk sep) . .	1	
-62	MS21042L08	. . NUT (96906)	4	
-63	AN960D8	. . WASHER (88044)	4	
-64	AN515-8R26	. . SCREW (88044)	2	
-65	AN507-832R26	. . SCREW (88044)	2	
	776561-1	. COVER INSTL, RH fus sta 212 to 225 control cable *(see fig. 30 for reqd)* .	REF	
-66	776562-1	. . COVER ASSY, RH fus sta 212 to 225 control cable	1	
		Attaching Parts		
	AN520-10R8	. . SCREW (88044)	2	
	AN960D10	. . WASHER (88044)	2	
	MS21042L3	. . NUT (96906)	2	
	AN742D24	. . CLAMP (88044)	2	
		Attaching Parts		
	NAS623-3-4	. . SCREW (80205)	1	
	AN960D10	. . WASHER (88044)	1	
	MS21042L3	. . NUT (96906)	1	

Figura e particolare	NDR	1 2 3 4 5 6 7 DENOMINAZIONE	Quant.	Codice applicab.
		NOSE LANDING GEAR STEERING CONTROLS FUSELAGE STATION 270 TO 310		
236- 1	772093-5	. CABLE ASSY, fwd LH nose wheel steering *(see fig. 235 for reqd)*	REF	6701-6725
	772093-145	. CABLE ASSY, fwd LH nose wheel steering *(see fig. 235 for reqd)*	REF	6726-
- 2	772093-9	. CABLE ASSY, fwd RH nose wheel steering *(see fig. 235 for reqd)*	REF	
	784220-11	. CABLES INSTL, nose steering fligt control *(see fig. 63 for reqd)*	REF	
- 3	RA2258-4	. . TERMINAL, quick disconnect (80097)	2	
- 4	NAS649B32S	. . BARREL, turnbuckle (80205)	2	
- 5	772093-81	. . CABLE ASSY, nose wheel	1	
- 6	772093-13	. . CABLE ASSY, nose wheel	1	
	MS20664C4	. . . TERMINAL (96906)	1	
	NAS650S4LH	. . . TERMINAL (80205)	1	
	761554-7	. BRACKET INSTL, fuselage station 300 nose wheel steering pulley *(see fig. 63 for reqd)*	REF	
- 7	761554-3	. . BRACKET ASSY, nose steering pulley	1	
		Attaching Parts		
	NAS623-3-6	. . SCREW (80205)	4	
	AN960D10	. . WASHER (88044)	4	
		*		
- 8	NAS427K31	. . . PIN (80205)	2	
- 9	NAS623-3-14	. . . SCREW (80205)	2	
-10	NAS1105-36D	. . . BOLT (80205)	1	
-11	AN25-40	. . . BOLT (88044)	1	
-12	AN960D10	. . . WASHER (88044)	2	
-13	AN960D516	. . . WASHER (88044)	3	
-14	MS21042L3	. . . NUT (96906)	2	
-15	MS21042L5	. . . NUT (96906)	2	
-16	NAS43DD3-40	. . . SPACER (80205)	2	
-17	NAS43DD5-58	. . . SPACER (80205)	2	
-18	MS20220-3	. . . PULLEY (96906)	2	
-19	761555	. . . BRACKET, nose steering control	1	
	784143-101	. BULKHEAD ASSY, fuselage station 305 lower (LH only) *(see fig. 30 for reqd)*	REF	6701-6765
	784143-103	. BULKHEAD ASSY, fuselage station 305 lower (LH only) *(see fig. 30 for reqd)*	REF	6766-
	770932-1	. . PULLEY INSTL, lower fuselage station 305 nose steering *(see fig. 30 for reqd)*	REF	
-20	770932-5	. . . PULLEY ASSY, nose steering	1	
		Attaching Parts		
	NAS623-3-5	. . . SCREW (80205)	4	
	AN960D10	. . . WASHER (88044)	4	
-21	770932-9	. . . SHIM, nose steering	AR	
	MS21042L3	. . . NUT (96906)	4	
		*		
-22	NAS427K17	. . . . PIN (80205)	3	
-23	NAS623-3-30	. . . . SCREW (80205)	1	
-24	NAS1105-18D	. . . . BOLT (80205)	1	
-25	AN960D10	. . . . WASHER (88044)	2	
-26	AN960D516	. . . . WASHER (88044)	1	
-27	MS21042L3	. . . . NUT (96906)	1	
-28	MS21042L5	. . . . NUT (96906)	1	
-29	NAS43DD3-46	. . . . SPACER (80205)	1	
-30	NAS43DD3-52	. . . . SPACER (80205)	1	
-31	AN960-516L	. . . . WASHER (88044)	6	
-32	MS20220A2	. . . . PULLEY (96906)	1	
-33	770932-3	. . . . ANGLE ASSY, nose steering	1	
-34	852081-101	A. . CHANNEL, antivibration	1	
		Attaching Parts		
-35	NAS602-10	A. . SCREW (80205)	4	
-36	AN960C8	A. . WASHER (88044)	4	
		*		
-38	NAS427K17	A. . PIN (80205)	1	
-39	784143-105	A. . SHIM	1	
-40	784143-107	A. . SHIM	1	
-41	761020	. PULLEY ASSY, NLG trunnion *(see fig. 232 for reqd)*	REF	
-42	8156-5	. STEER DAMPER ASSY, NLG (81400) (Lockheed spec dwg 668457-1) (see T.O. 4SA3-5-14) *(see fig. 232 for reqd)*	REF	

A - Reqd per AA.1F-104-OT-691B

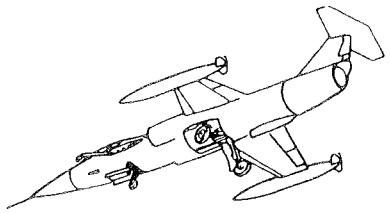

Nose Landing Gear

Figure 236—Nose Landing Gear Steering Controls Fuselage Station 270 to 310

Figura e particolare	NDR	DENOMINAZIONE 1 2 3 4 5 6 7	Quant.	Codice applicab.
		MAIN LANDING GEAR COMPLETE		
237	849161-101	. MAIN LANDING GEAR INSTL (LH) (NHA 849140-101)	1	6701-6740
	849161-109	. MAIN LANDING GEAR INSTL (LH) (NHA 849140-101)	1	6741-6753
	849161-121	. MAIN LANDING GEAR INSTL (LH) (NHA 849140-101)	1	6754-
	849161-102	. MAIN LANDING GEAR INSTL (RH) (NHA 849140-101)	1	6701-6740
	849161-110	. MAIN LANDING GEAR INSTL (RH) (NHA 849140-101)	1	6741-6753
	849161-122	. MAIN LANDING GEAR INSTL (RH) (NHA 849140-101)	1	6754-
- 1	849161-103	. . STRUT ASSY, MLG (LH) *(see fig. 238)*	1	6701-6740
	849161-113	. . STRUT ASSY, MLG (LH) *(see fig. 238)*	1	6741-6753
	849161-123	. . STRUT ASSY, MLG (LH) *(see fig. 238)*	1	6754-
	849161-104	. . STRUT ASSY, MLG (RH) *(see fig. 238)*	1	6701-6740
	849161-114	. . STRUT ASSY, MLG (RH) *(see fig. 238)*	1	6741-6753
	849161-124	. . STRUT ASSY, MLG (RH) *(see fig. 238)*	1	6754-
- 2	760718	. . PIN ASSY, MLG	1	
		Attaching Parts		
	AN502-416-10	. . SCREW (88044)	1	
- 3	760719	. . . PIN, MLG mounting	1	
- 4	726062	. . . PLUG, mounting pin	1	
- 5	MS15001-4	. . . FITTING (lubrication) (96906)	1	
- 6	760938L	. . FITTING, upper liquid spring	1	6701-6815
	760938-101	. . FITTING, upper liquid spring LH	1	6816-
	760938R	. . FITTING, upper liquid spring	1	6701-6815
	760938-102	. . FITTING, upper liquid spring RH	1	6816-
- 7	784939-1	. . PIN, upper liquid spring	1	
- 8	761001	. . BOLT, upper liquid spring	1	6701-6840
	761001-101	. . BOLT, upper liquid spring	1	6841-
- 9	MS20002-14	. . WASHER (96906)	1	
-10	AN320-14	. . NUT (88044)	1	
	MS24665-359	. . COTTER PIN (96906)	1	
-11	1439L000-503	. . SPRING ASSY, MLG liquid (A2142) (75662) (Lockheed spec dwg 668456-105) (see T.O. 4SA8-6-3)	1	
	794494-1	. . BOLT ASSY, liquid spring (LH)	1	
	794494-2	. . BOLT ASSY, liquid spring (RH)	1	
-12	794494-3	. . . BOLT (LH)	1	
	794494-4	. . . BOLT (RH)	1	
-13	RRT90C	. . . RING, retainer (80756)	1	
-14	BSSR6700G	. . . BEARING, self-aligning spherical (81376)	1	
-15	NAS516-1	. . . FITTING (80205)	1	
-16	MS20002-14	. . WASHER (96906)	1	
-17	NAS1022A14	. . NUT (80205)	1	
-18	726387-3	. . BOLT, liquid spring	1	
-19	797142-1	. . WASHER, MLG liquid spring lower	1	
-20	AN320-14	. . NUT (88044)	1	
	MS24665-359	. . COTTER PIN (96906)	1	
	771678-1	. . LINK ASSY, MLG liquid spring lower	1	6701-6815
	771678-101	. . LINK ASSY, MLG liquid spring lower	1	6816-
-21	771678-3	. . . LINK (make from 771677-1)	1	6701-6815
	771678-103	. . . LINK (make from 771677-1)	1	6816-
-22	762259	. . . BUSHING, lower link assy liquid spring	2	
-23	MS15001-1	. . . FITTING (lubrication) (96906)	1	
-24	850134-101	. . FITTING ASSY, MLG plumbing	1	
-25	850133-101	. . . BODY, MLG plumbing (make from 850132-101)	1	
-26	850135-101	. . . BOLT, MLG plumbing	1	
-27	MS28775-110	. . . PACKING (96906)	1	
-28	AN932D1	. . . PLUG (88044)	1	
-29	AN932-1	. . . PLUG (88044)	1	
-30	726066	. . . ELBOW, MLG plumbing *(see fig. 119 and 121)*	1	
-31	MS28775-011	. . . PACKING (96906)	2	
-32	LS4565-6	. . . RING, backup (36659)	2	
-33	AN960D416	. . . WASHER (88044)	1	

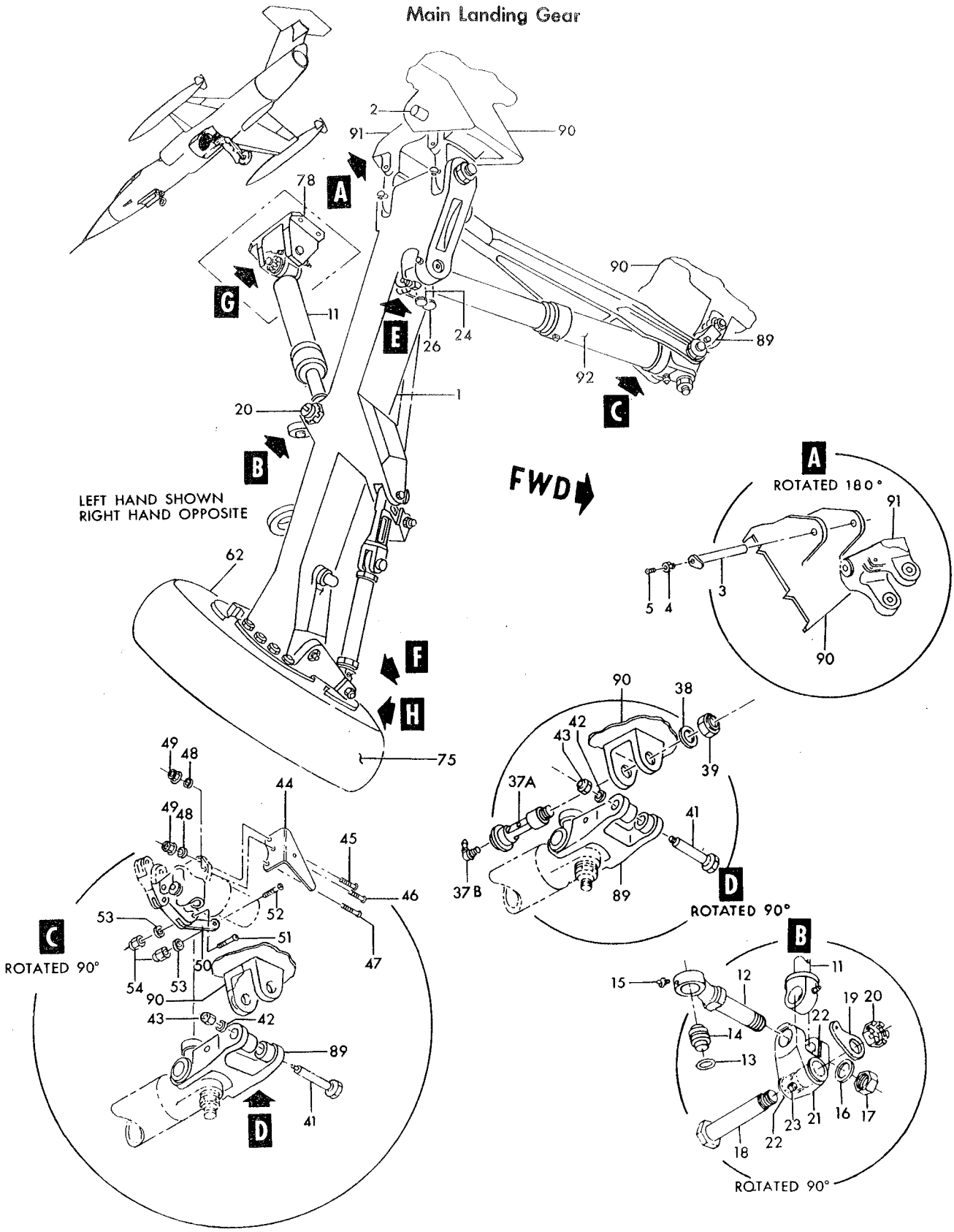

P56.15 202

Figure 237— Main Landing Gear Complete (Sheet 1 of 2)

Main Landing Gear

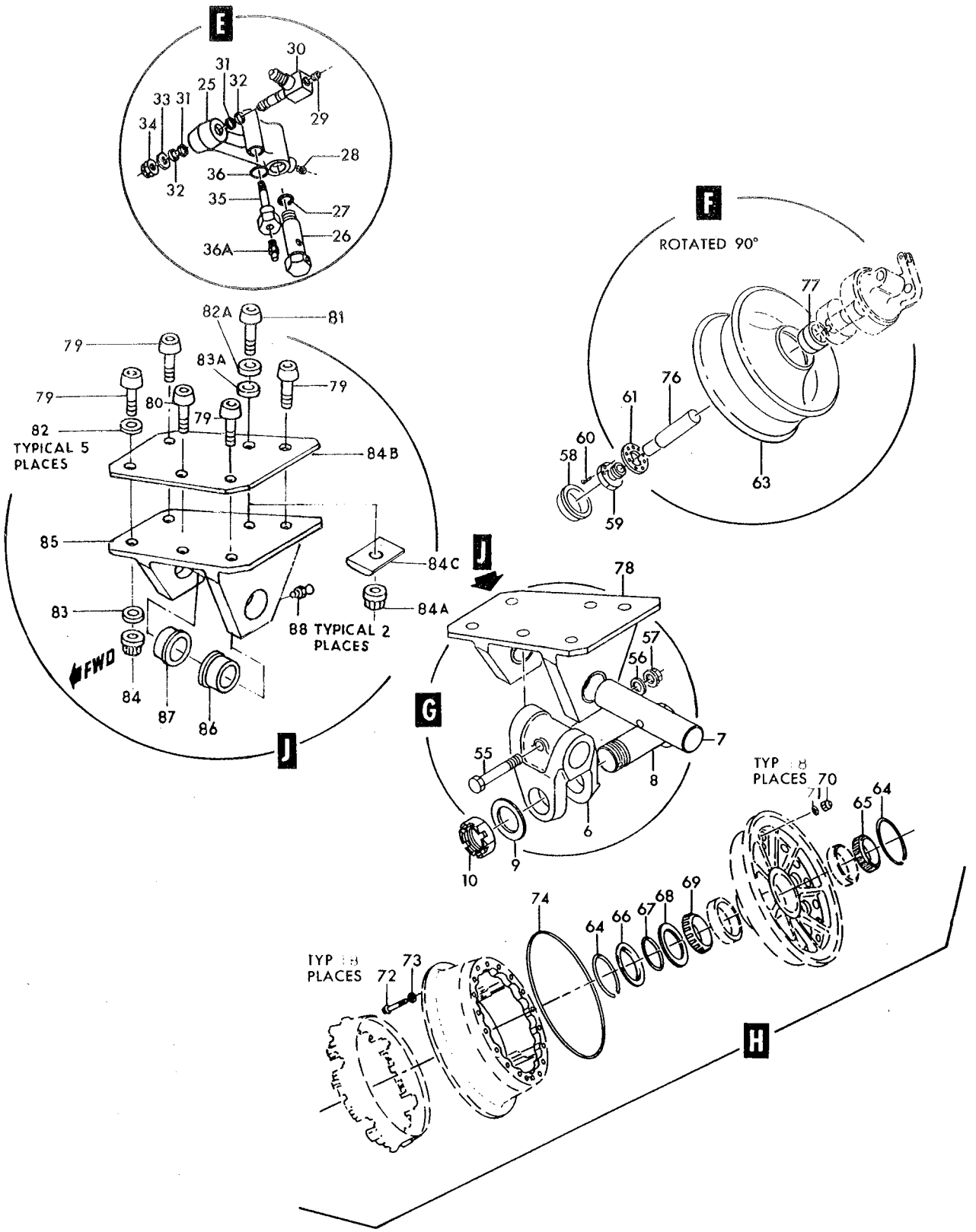

P56-16-245

Figure 237— Main Landing Gear Complete (Sheet 2 of 2)

Figura e particolare	NDR	DENOMINAZIONE	Quant.	Codice applicab.
237-34	AN310-4	NUT (88044)	1	
	MS24665-134	COTTER PIN (96906)	1	
-35	850136-101	BOLT, MLG plumbing attachment	1	
-36	MS28775-110	PACKING (96906)	1	
-36A	MS15001-1	FITTING (lubrication) (96906)	1	
-37A	796198-1	PIN ASSY, MLG drag link mount	1	
-37B	MS15001-4	FITTING (lubrication) (96906)	1	
-38	AN960-1616	WASHER (88044)	1	
-39	AN320-16	NUT (88044)	1	
	MS24665-359	COTTER PIN (96906)	1	
-41	796197-1	BOLT, MLG drag link	1	
-42	AN960-816	WASHER (88044)	1	
-43	NAS1022A8	NUT (80205)	1	
-44	760811L	BRACKET, MLG downlock switch (LH)	1	
	764912	BRACKET, MLG downlock switch (RH)	1	
		Attaching Parts		
-45	NAS623-3-8	SCREW (80205)	1	
-46	AN501A10-12	SCREW (88044)	1	
-47	AN501A10-10	SCREW (88044)	1	
-48	AN960-10	WASHER (88044)	2	
-49	MS21043-3	NUT (96906)	2	
-50	760813-101	ACTUATOR, lock switch	1	
-51	AN23-15	BOLT (88044)	1	
-52	AN23-10	BOLT (88044)	1	
-53	AN960-10	WASHER (88044)	2	
-54	AN320-3	NUT (88044)	2	
	MS24665-132	COTTER PIN (96906)	2	
-55	NAS1104-20	BOLT (80205)	1	
-56	AN960-416	WASHER (88044)	1	
-57	MS21042L4	NUT (96906)	1	
	792849-3	WHEEL INSTL, MLG (NHA 849138-101)	1	
-58	785473-1	CAP ASSY, hub wheel MLG	2	
-59	785092-1	NUT, MLG wheel	2	
-60	AN502-10-6	SCREW (88044)	2	
	AN960-10L	WASHER (88044)	2	
-61	760518	WASHER, MLG wheel nut lock	2	
-62	792867-1	WHEEL AND TIRE ASSY, MLG	2	6701-6765
	792867-101	WHEEL AND TIRE ASSY, MLG	2	6766-
-63	153715-1	WHEEL, 26X8-0 type VIII (A1384) (06848) (Lockheed spec dwg 660189-1) (see T.O. 4W1-8-13)	1	
		Partial Breakdown Follows		
-64	109S44	RING, retaining	2	
-65	385A	BEARING, cone and roller	1	
-66	148762	RETAINER, felt (60038)	1	
-67	108S104	WASHER, felt	1	
-68	107S32	WASHER, retainer	1	
-69	39250	BEARING, cone and 21 roller (60038)	1	
-70	Z3840T070	NUT, self-locking (72962)	18	
-71	MS20002-7	WASHER (96906)	18	
-72	MS21250-07020	BOLT (96906)	18	
-73	MS20002C7	WASHER (96906)	18	
-74	152878	PACKING, preformed (06848)	1	
-75	26X8-0-14	TIRE, type VIII 16 ply rating MLG (MIL-C-50418) (AF dwg 608501 and 61D3001) (A0043) (00198) (Lockheed spec dwg 660190-1)	1	6701-6765
	23889063	TIRE, tubeless, 18 ply rating MLG (AF81D3001E) (A0043) (Lockheed spec dwg 740719-101) (see sep. publ. whn avail.)	1	6766-
-76	251445	GENERATOR UNIT, (G5) anti-skid brake (A0210) (see sep. pub. whn avail) (alternate to 9532445)	2	

Figura e particolare	NDR	DENOMINAZIONE 1 2 3 4 5 6 7	Quant.	Codice applicab.
237	9532445	. . GENERATOR UNIT, (G5) anti-skid brake (73842) (Lockheed spec dwg 662133-1) (see T.O. 4BA8-14-3) (alternate to 251445)	REF	
-77	798624-101	. . SPACER, MLG axle	2	
-78	760980-501	. FITTING ASSY, liquid spring support (LH) *(see fig. 40 for reqd)*	REF	
	760980-502	. FITTING ASSY, liquid spring support (RH) *(see fig. 40 for reqd)*	REF	
		Attaching Parts		
-79	MS20005-14	. BOLT (96906)	4	
-80	MS20005-16	. BOLT (96906)	1	
-81	MS20004-18	. BOLT (96906)	1	
-82	MS20002C5	. WASHER (96906)	5	
-82A	MS20002C4	. WASHER (96906)	1	
-83	MS20002-5	. WASHER (96906)	5	
-83A	MS20002-4	. WASHER (96906)	1	
-84	EB054	. NUT (72962)	5	
-84A	EB048	. NUT (72962)	1	
-84B	761060-3	. SHIM	1	
-84C	727158-1	. SPACER	1	
-85	760980-5	. . FITTING, liquid spring support (LH)	1	
	760980-6	. . FITTING, liquid spring support (RH)	1	
-86	760981-3	. . BUSHING, support liquid spring fitting	1	
-87	760981-4	. . BUSHING, support liquid spring fitting	1	
-88	MS15001-1	. . FITTING (96906)	2	
-89	784857-1	. LINK ASSY, MLG drag strut *(see fig. 238 for reqd)*	REF	6701-6753
	784857-101	. LINK ASSY, MLG drag strut *(see fig. 238 for reqd)*	REF	6754-
-90	783170-1	. KEELSON ASSY, fus sta 422 to 489 *(see fig. 55 for reqd)*	REF	
-91	760674L	. YOKE ASSY, MLG *(see fig. 238 for reqd)*	REF	
	760674R	. YOKE ASSY, MLG *(see fig. 238 for reqd)*	REF	
-92	849162-101	. CYLINDER ASSY, MLG drag strut (LH) (see AA9-849162-4) *(see fig. 238 for reqd)*	REF	6701-6740
	849162-107	. CYLINDER ASSY, MLG drag strut (LH) (see sep pub. whn avail) *(see fig. 238 for 238 reqd)*	REF	6741-6753
	849162-115	. CYLINDER ASSY, MLG drag strut (LH) (see sep pub. whn avail) *(see fig. 238 for reqd)*	REF	6754-
	849162-102	. CYLINDER ASSY, MLG drag strut (RH) (see AA9-849162-4) *(see fig. 238 for reqd)*	REF	6741-6740
	849162-108	. CYLINDER ASSY, MLG drag strut (RH) (see sep pub. whn avail) *(see fig. 238 for reqd)*	REF	6741-6753
	849162-116	. CYLINDER ASSY, MLG drag strut (RH) (see sep pub. whn avail) *(see fig. 238 for reqd)*	REF	6754-

Figura e particolare	NDR	1 2 3 4 5 6 7 DENOMINAZIONE	Quant.	Codice applicab.
		MAIN LANDING GEAR DRAG STRUT		
238- 1	849161-103	STRUT ASSY, MLG (LH) *(see fig. 237 for reqd)*	REF	6701-6740
	849161-113	STRUT ASSY, MLG (LH) *(see fig. 237 for reqd)*	REF	6741-6753
	849161-123	STRUT ASSY, MLG (LH) *(see fig. 237 for reqd)*	REF	6754-
	849161-104	STRUT ASSY, MLG (RH) *(see fig. 237 for reqd)*	REF	6701-6740
	849161-114	STRUT ASSY, MLG (RH) *(see fig. 237 for reqd)*	REF	6741-6753
	849161-124	STRUT ASSY, MLG (RH) *(see fig. 237 for reqd)*	REF	6754-
	793003-101	A. PLUMBING INSTL, LH landing gear assy *(see fig. 119)*	1	6701-6790
	793003-103	B. PLUMBING INSTL, LH landing gear assy *(see fig. 119)*	1	
	793004-101	A. PLUMBING INSTL, RH landing gear assy *(see fig. 121)*	1	6701-6790
	793004-103	B. PLUMBING INSTL, RH landing gear assy *(see fig. 121)*	1	
- 2	851332-101	ACTUATOR, MLG ground air safety switch (LH)	1	
	798477-101	SUPPORT, MLG actuating cylinder hose (RH)	1	
- 3	AN502-416-10	SCREW (88044)	2	
- 4	2602310-1	BRAKE, MLG wheel (A1384) (06848) (Lockheed spec dwg 671560-101) (see sep pub whn avail)	1	
		Attaching Parts		
- 5	NAS1106-11D	BOLT (80205)	6	
- 6	NAS1106-17D	BOLT (80205)	1	
	AN960-616L	WASHER (88044)	7	
	AN960-616L	WASHER (88044)	7	6701-6740
	AN960-616	WASHER (88044)	7	6741-
	MS21042L6	NUT (96906)	7	
- 7	849159-101	MAIN LANDING GEAR ASSY (LH)	1	6701-6740
	849159-111	MAIN LANDING GEAR ASSY (LH)	1	6741-6753
	849159-121	MAIN LANDING GEAR ASSY (LH)	1	6754-
	849159-102	MAIN LANDING GEAR ASSY (RH)	1	6701-6740
	849159-112	MAIN LANDING GEAR ASSY (RH)	1	6741-6753
	849159-122	MAIN LANDING GEAR ASSY (RH)	1	6754-
- 8	MS20392-3C87	PIN (96906)	1	
- 8A	852832-103	WASHER, MLG drag strut	2	6754-
	MS24665-132	COTTER PIN (96906)	2	
- 9	849164-101	PIN, MLG cylinder attaching	1	
-10	MS20392-2C33	PIN (96906)	1	
-11	784807-1	PIN, MLG	1	
-12	849159-103	LEG ASSY, MLG (LH)	1	6701-6740
	849159-109	LEG ASSY, MLG (LH)	1	6741-
	849159-104	LEG ASSY, MLG (RH)	1	6701-6740
	849159-110	LEG ASSY, MLG (RH)	1	6741-
-13	AN320-7	NUT (36659)	2	
-14	AN320-7	NUT (36659)	2	
	MS24665-285	COTTER PIN (96906)	3	
	MS24665-283	COTTER PIN (96906)	2	
-15	AN960D716	WASHER (88044)	5	
-16	LS9313P7-24	BOLT (36659)	3	
-17	LS9313P7-26	BOLT (36659)	1	
-18	NAS1106-32D	BOLT (80205)	1	
-19	LS4893-6C	RETAINER, barrel nut (36659)	1	
-20	SL40-624	NUT, self-locking (97393)	1	
-21	SS48172	PLUG, button (61864)	1	
-22	760517	C. KINGPIN, MLG axle	1	
-23	MS15001-1	FITTING (lubrication) (96906)	1	
-24	784889-1	AXLE, MLG (LH)	1	
	784889-2	AXLE, MLG (RH)	1	
-25	760596-3	ROD ASSY, MLG lower	1	
	760596-4	ROD ASSY, MLG lower	1	
-26	760594-3L	ROD END, MLG position	1	
	760594-3R	ROD END, MLG position	1	
-27	760594-5	ROD END, MLG position	1	

Main Landing Gear

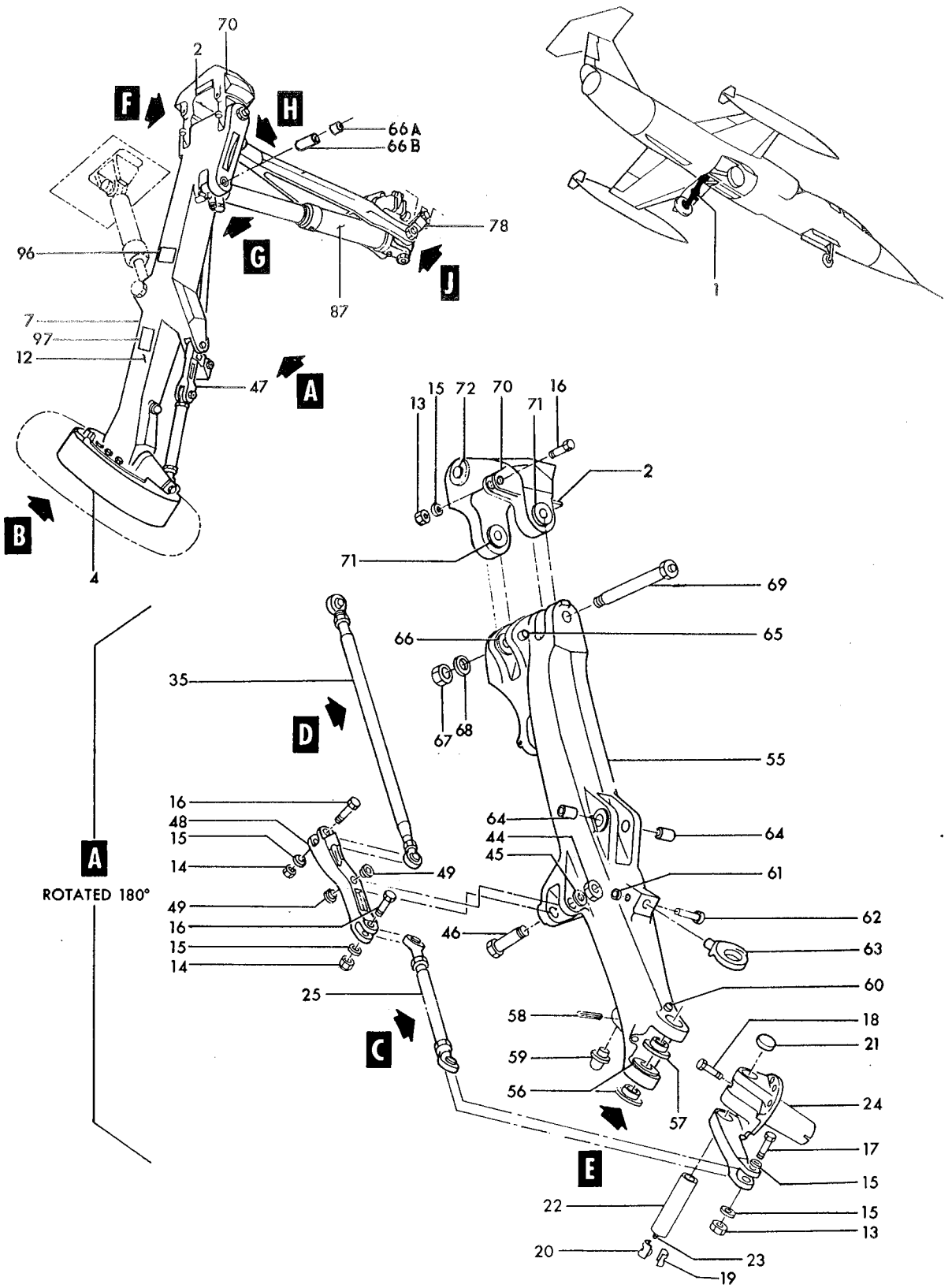

Figure 238— Main Landing Gear Drag Strut (Sheet 1 of 3)

Main Landing Gear

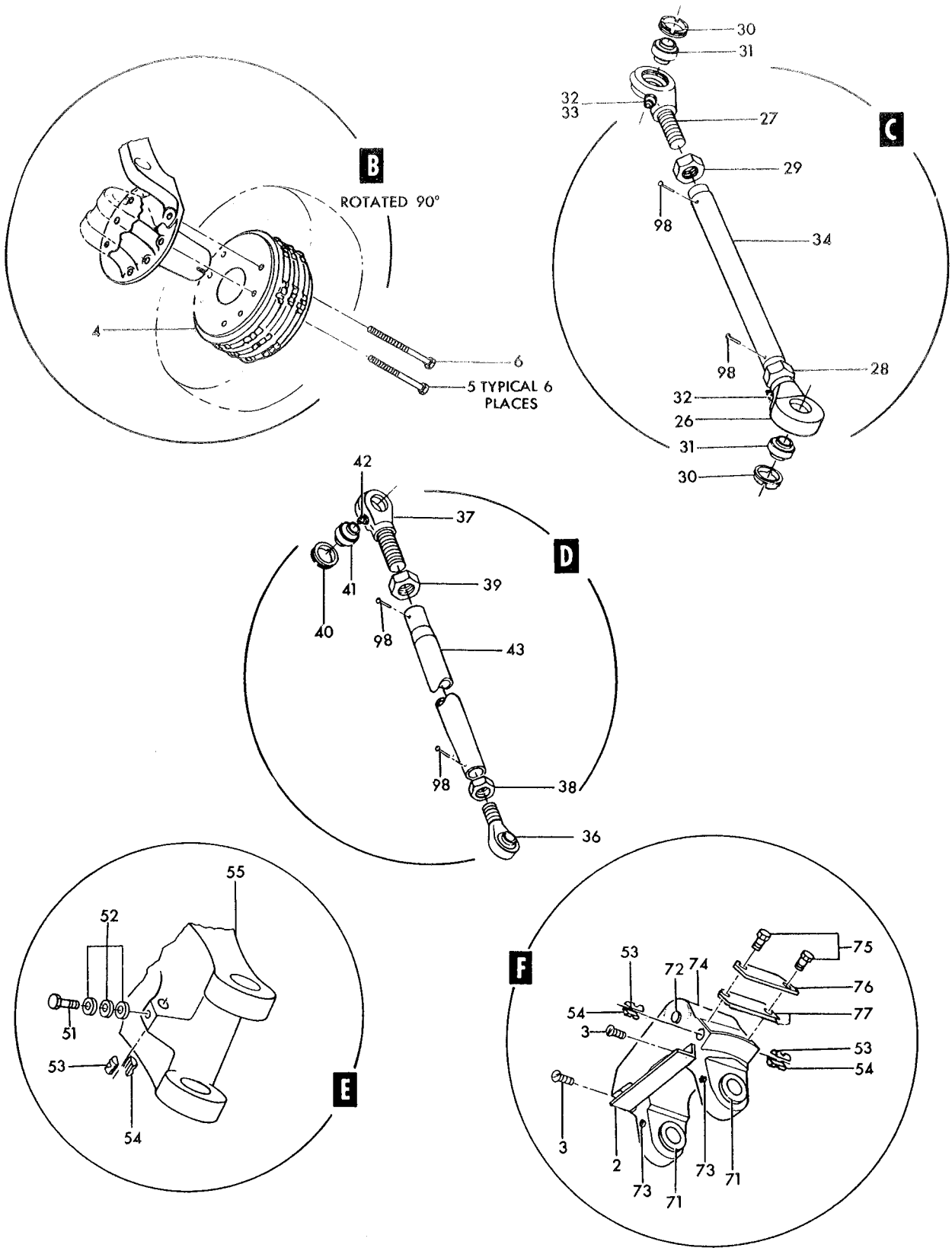

Figure 238—Main Landing Gear Drag Strut (Sheet 2 of 3)

Main Landing Gear

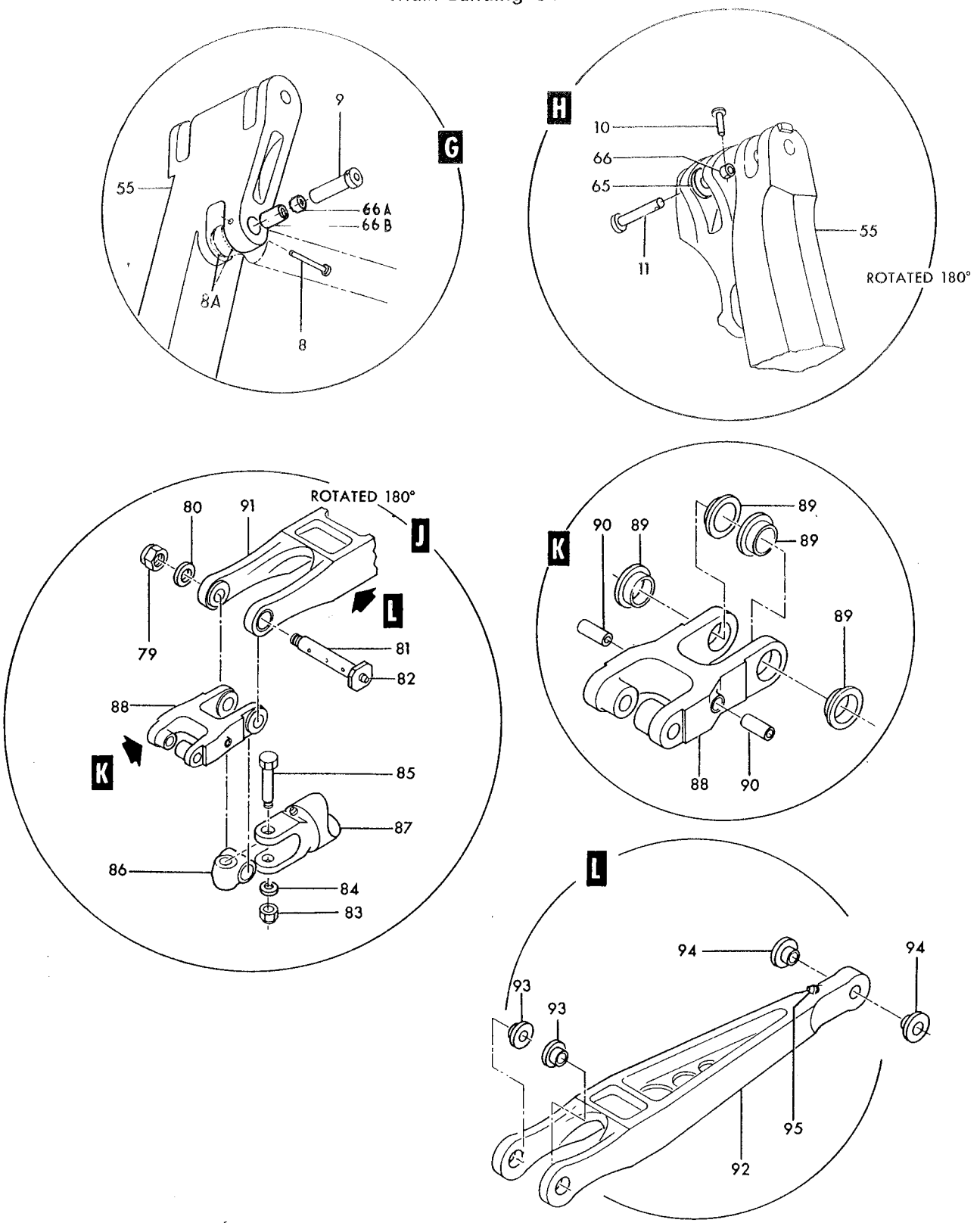

Figure 238—Main Landing Gear Drag Strut (Sheet 3 of 3)

Figura e particolare	NDR	DENOMINAZIONE	Quant.	Codice applicab.
238	760594-6	ROD END, MLG position	1	
-28	AN316-12R	NUT (88044)	1	
-29	AN316-12L	NUT (88044)	1	
-30	760598	RING, wheel position rod	2	
-31	BHDR7525G	BEARING, ball (81376)	2	
-32	MS15001-1	FITTING (lubrication) (96906)	1	
-33	1851	FITTING, flush (lubrication) (95879)	1	
-34	760595	TUBE ASSY, MLG position	1	
-35	850065-101	ROD ASSY, MLG upper (LH)	1	6701-6790
	850065-103	ROD ASSY, MLG upper (LH)	1	6791-
	850065-102	ROD ASSY, MLG upper (RH)	1	6701-6790
	850065-104	ROD ASSY, MLG upper (RH)	1	6791-
-36	BRE7290L	BEARING, rod end (81376)	1	
-37	760594-4L	ROD END, MLG position	1	6701-6790
	760594-5	ROD END, MLG position	1	6791-
	760594-4R	ROD END, MLG position	1	6701-6790
	760594-6	ROD END, MLG position	1	6791-
-38	AN316-8R	NUT (88044)	1	
-39	AN316-12L	NUT (88044)	1	
-40	760598	RING, wheel position rod	1	
-41	BHDR7295G	BEARING, ball (81376)	1	
-42	MS15001-1	FITTING (lubrication) (96906)	1	6701-6790
	1851	FITTING (lubrication) (95879)	1	6791-
-43	850061-101	ROD, MLG upper	1	
-44	AN320-8	NUT (88044)	1	
-45	AN960-816L	WASHER (88044)	1	
-46	850070-105	BOLT	1	
-47	850072-101	BELLCRANK ASSY, MLG position (LH)	1	
	850072-102	BELLCRANK ASSY, MLG position (RH)	1	
-48	850072-103	BELLCRANK (LH)	1	
	850072-104	BELLCRANK (RH)	1	
-49	726064	BUSHING, MLG bellcrank	2	
-51	728656-1	BOLT	1	
-52	AN960-416L	WASHER (88044)	3	
-53	LS4893-4	RETAINER, barrel nut (36659)	3	
-54	2752-048	NUT, barrel (72962)	3	
	849160-101	LEG ASSY, MLG (LH)	1	
	849160-102	LEG ASSY, MLG (RH)	1	
-55	849160-103	LEG, MLG (LH)	1	
	849160-104	LEG, MLG (RH)	1	
-56	761006	BUSHING, MLG axle pin	2	
-57	761005	BUSHING, MLG axle pin	1	
-58	NAS561P6-24	PIN (80205)	1	
-59	761002	LUG, MLG jacking	1	
-60	MS15001-1	FITTING (lubrification) (96906)	1	
-61	AN960-416	WASHER (88044)	1	
-62	726720-3	PIN, MLG clevis	1	
-63	760997	RING, MLG towing	1	
-64	LS3859R14-30	BUSHING, line ream (36659)	2	
-65	784810-1	BUSHING, MLG drag link outboard	1	
-66	784809-1	BUSHING, MLG drag link inboard	1	
-66A	849193-101	BUSHING, main landing gear	1	
-66B	849193-103	BUSHING, main landing gear	1	
	MS24665-132	COTTER PIN (96906)	1	
-67	NAS1022A14	NUT (80205)	1	
-68	AN960D1416	WASHER (88044)	1	
-69	760998	PIN, MLG retraction pivot	1	
-70	760674L	YOKE ASSY, MLG *(see fig. 237)*	1	
	760674R	YOKE ASSY, MLG *(see fig. 237)*	1	
-71	726063	BUSHING, MLG yoke lower	4	

Figura e particolare	NDR	1	2	3	4	5	6	7	DENOMINAZIONE	Quant.	Codice applicab.
238-72	726065					.			BUSHING, MLG yoke	2	
-73	MS15001-4					.			FITTING (lubrication) (96906)	2	
-74	760674-3L					.			YOKE, MLG	1	
	760674-3R					.			YOKE, MLG	1	
-75	NAS428-4-7				.				BOLT (80205)	2	
-76	762716				.				PLATE, bumber MLG yoke	1	
-77	762715				.				SHIM, bumper plate	2	
-78	849159-105			.					LINK ASSY, MLG drag (LH)	1	6701-6740
	849159-115			.					LINK ASSY, MLG drag (LH)	1	6741-6753
	849159-123			.					LINK ASSY, MLG drag (LH)	1	6754-
	849159-106			.					LINK ASSY, MLG drag (RH)	1	6701-6740
	849159-116			.					LINK ASSY, MLG drag (RH)	1	6741-6753
	849159-124			.					LINK ASSY, MLG drag (RH)	1	6754-
-79	NAS1022A17				.				NUT (80205)	1	
-80	AN960D1616				.				WASHER (88044)	1	
	784854-1				.				BOLT ASSY, MLG lower drag link	1	
-81	784854-3				.				BOLT, MLG drag link	1	
-82	MS15001-11				.				FITTING (lubrication) (96906)	1	
-83	NAS1022A12				.				NUT (80205)	1	
-84	AN960D1216				.				WASHER (88044)	1	
-85	760723				.				BOLT, MLG drag strut cylinder	1	
-86	784855-1				.				UNIVERSAL, MLG drag strut	1	
-87	849162-101				.				CYLINDER ASSY, MLG drag strut (LH) (see AA9-849162-4) *(see fig. 118 and 237)*	1	6701-6740
	849162-107				.				CYLINDER ASSY, MLG drag strut (LH) (see sep pub. whn avail) *(see fig. 118 and 237)*	1	6741-6753
	849162-115				.				CYLINDER ASSY, MLG drag strut (RH) (see sep pub. whn avail) *(see fig. 118 and 237)*	1	6754-
	849162-102				.				CYLINDER ASSY, MLG drag strut (RH) (see AA9-849162-4) *(see fig. 120 and 237)*	1	6701-6740
	849162-108				.				CYLINDER ASSY, MLG drag strut (RH) (see sep pub. whn avail) *(see fig. 120 and 237)*	1	6741-6753
	849162-116				.				CYLINDER ASSY, MLG drag strut (RH) (see sep pub. whn avail) *(see fig. 120 and 237)*	1	6754-
-88	784857-1				.				LINK ASSY, MLG drag strut *(see fig. 237 and 241)*	1	6701-6753
	784857-101				.				LINK ASSY, MLG drag strut *(see fig. 237 and 241)*	1	6754-
-89	784859-1				.				BUSHING, MLG drag strut link	4	
-90	LS3859R4-12				.				BUSHING, line ream (36659)	2	
-91	784805-5				.				LINK ASSY, MLG upper drag	1	
-92	784805-7				.				LINK, MLG drag (make from 784853-1)	1	
-93	784860-1				.				BUSHING, MLG upper drag link fwd	2	
-94	784808-1				.				BUSHING, MLG upper drag link aft	2	
-95	MS15001-1				.				FITTING (lubrication) (96906)	1	
-96	792849-11			.					STRIP, MLG strut	1	
-97	792849-13			.					STRIP, MLG strut	1	
-98	MS20615M4-20		.						RIVET (96906) (NHA 792849-5 and 792849-6)	4	

A - Removed per AA.1F-104-OT-714A
B - Reqd per AA.1F-104-OT-714A
C - Modified per AA.1F-104-OT-785

Figura e particolare	NDR	1 2 3 4 5 6 7 DENOMINAZIONE	Quant.	Codice applicab.
		MAIN LANDING GEAR FORWARD DOORS		
239	793432-109	. DOOR INSTL, MLG fwd (LH) (NHA 849140-101)	1	6701-6720
	793432-111	. DOOR INSTL, MLG fwd (LH) (NHA 849140-101)	1	6721-6815
	793432-115	. DOOR INSTL, MLG fwd (LH) (NHA 849140-101)	1	6816-
	793432-110	. DOOR INSTL, MLG fwd (RH) (NHA 849140-101)	1	6701-6720
	793432-112	. DOOR INSTL, MLG fwd (RH) (NHA 849140-101)	1	6721-6815
	793432-116	. DOOR INSTL, MLG fwd (RH) (NHA 849140-101)	1	6816-
- 1	MS25083-1BB6	. . JUMPER (96906)	2	
		Attaching Parts		
	NAS623-3-2	. . SCREW (80205)	2	
- 2	793432-107	. . DOOR ASSY, MLG fwd *(see fig. 61)*	1	6701-6720
	793432-113	. . DOOR ASSY, MLG fwd *(see fig. 61)*	1	6721-6815
	793432-117	. . DOOR ASSY, MLG fwd *(see fig. 61)*	1	6816-
	793432-108	. . DOOR ASSY, MLG fwd *(see fig. 61)*	1	6701-6720
	793432-114	. . DOOR ASSY, MLG fwd *(see fig. 61)*	1	6721-6815
	793432-118	. . DOOR ASSY, MLG fwd *(see fig. 61)*	1	6816-
		Attaching Parts		
- 3	NAS623-3-4	. . SCREW (80205)	16	
- 4	NAS623-3-6	. . SCREW (80205)	11	
- 5	NAS623-3-7	. . SCREW (80205)	9	
- 6	NAS623-3-8	. . SCREW (80205)	2	
- 7	NAS623-4-6	. . SCREW (80205)	1	
- 8	MS20004-22	. . BOLT (96906)	8	
		*		
	797746-1	. . . FITTING ASSY, MLG fwd door	1	
- 9	797746-3	. . . . FITTING, MLG fwd door	1	
	797746-2	. . . FITTING ASSY, MLG fwd door	1	
	797746-4	. . . . FITTING, MLG fwd door	1	
-10	763602	. . . HINGE PIN, MLG fwd door	1	
-11	763132L	. . . HINGE, MLG fwd door fwd	1	
	763132R	. . . HINGE, MLG fwd door fwd	1	
-12	763133L	. . . HINGE, MLG fwd door center	1	
	763133R	. . . HINGE, MLG fwd door center	1	
-13	763134L	. . . HINGE, MLG fwd door aft	1	
	763134R	. . . HINGE, MLG fwd door aft	1	
-14	771371-1	. . . HINGE, MLG fwd door fwd	1	
	771371-2	. . . HINGE, MLG fwd door fwd	1	
		Attaching Parts		
-15	NAS623-3-5	. . . SCREW (80205)	2	
-16	NAS1203-4	. . . SCREW (80205)	4	
-17	NAS1203-5	. . . SCREW (80205)	2	
-18	NAS1203-6	. . . SCREW (80205)	4	
-19	NAS1203-7	. . . SCREW (80205)	4	
-20	ASCT509T6-5	. . . LOCKBOLT, stump type (29666)	4	
-21	AN960D10	. . . WASHER (88044)	16	
-22	MS21042L3	. . . NUT (96906)	16	
		*		
-23	771370-1	. . . HINGE, MLG fwd door center (LH)	1	
	771370-2	. . . HINGE, MLG fwd door center (RH)	1	
		Attaching Parts		
-24	ASCT509T6-5	. . . LOCKBOLT, stump type (29666)	10	
-25	F200-6	. . . JO BOLT (98524)	38	
-26	F200-7	. . . JO BOLT (98524)	2	
-27	771372-1	. . . HINGE, MLG fwd door aft (LH)	1	
	771372-2	. . . HINGE, MLG fwd door aft (RH)	1	
		Attaching Parts		
-28	NAS1203-4	. . . SCREW (80205)	7	
-29	NAS1203-6	. . . SCREW (80205)	1	
-30	NAS1203-7	. . . SCREW (80205)	4	
-31	NAS1203-8	. . . SCREW (80205)	2	

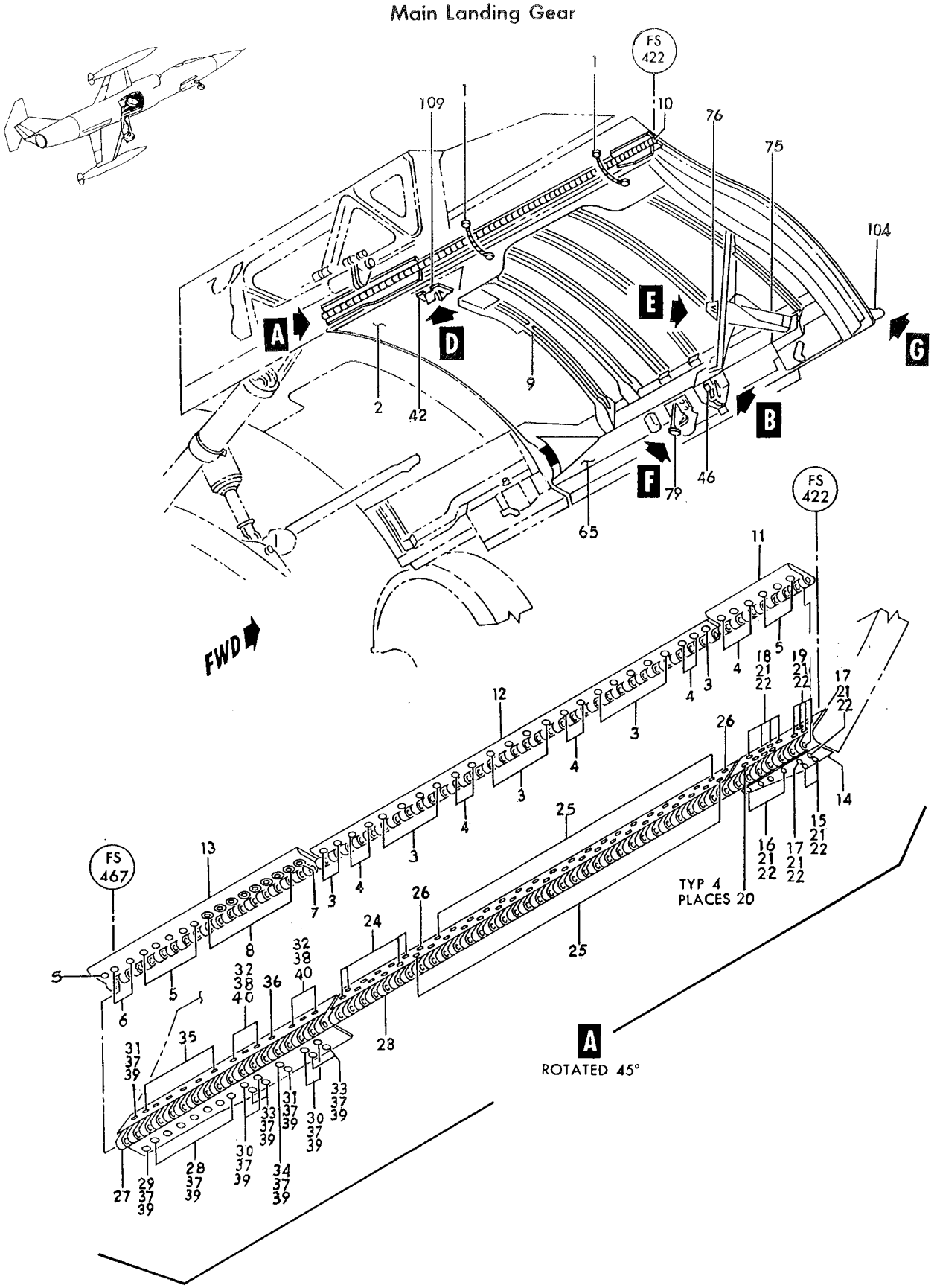

Figure 239—Main Landing Gear Forward Doors (Sheet 1 of 2)

Main Landing Gear

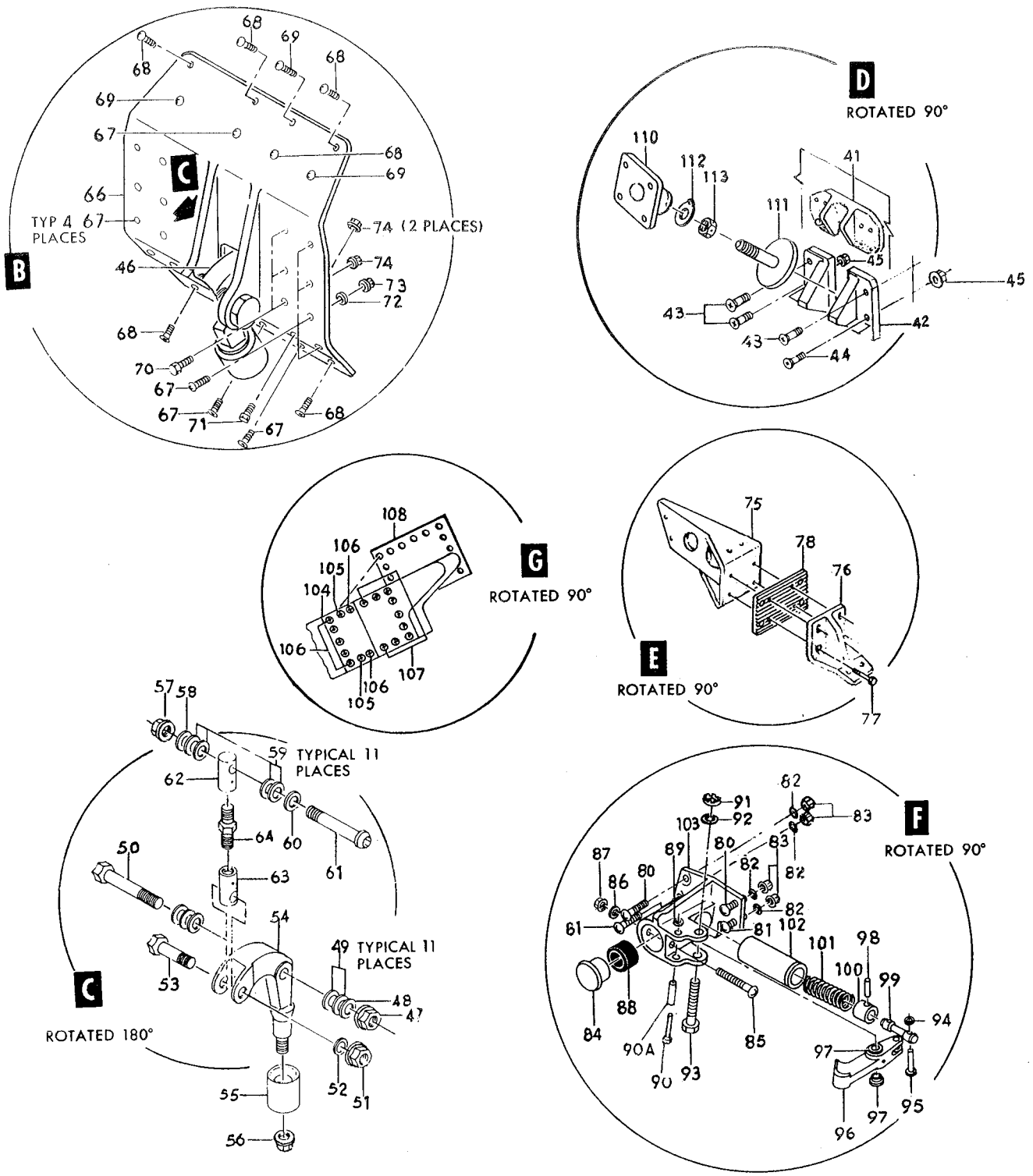

Figure 239—Main Landing Gear Forward Doors (Sheet 2 of 2)

Figura e particolare	NDR	1	2	3	4	5	6	7	DENOMINAZIONE	Quant.	Codice applicab.
239-32	NAS1204-8								SCREW (80205)	AR	
-33	NAS623-3-7								SCREW (80205)	4	
-34	NAS623-3-8								SCREW (80205)	1	
-35	ASCT509T6-6								LOCKBOLT, stump type (29666)	6	
-36	ASCT509T8-8								LOCKBOLT, stump type (29666)	1	
-37	AN960D10								WASHER (88044)	19	
-38	AN960D416								WASHER (88044)	6	
-39	MS21042L3								NUT (96906)	19	
-40	MS21042L4								NUT (96906)	6	
									*		
-41	852037-101								SEAT, MLG fwd door stop (LH)	1	
	852037-102								SEAT, MLG fwd door stop (RH)	1	
-42	777206-1								SEAT ASSY, MLG fwd door stop (match comp do not stk sep)	1	
	777206-2								SEAT ASSY, MLG fwd door stop (match comp do not stk sep)	1	
									Attaching Parts		
-43	NAS623-4-8								SCREW (80205)	3	
-44	NAS423-4-11								SCREW (80205)	1	
-45	MS21042L4								NUT (96906)	4	
									*		
	777206-3								SEAT, MLG fwd door stop (reqd on 777206-1)	1	
	777206-4								SEAT, MLG fwd door stop (reqd on 777206-2)	1	
	777206-5								SEAT, MLG fwd door stop (reqd on 777206-1)	1	
	777206-6								SEAT, MLG fwd door stop (reqd on 777206-2)	1	
-46	793474-1								LEVER ASSY, MLG fwd door latch	1	
-47	MS21042L7								NUT (96906)	1	
-48	AN960-716								WASHER (88044)	1	
-49	AN960-716L								WASHER (88044)	11	
-50	AN7-21								BOLT (88044)	1	
-51	MS21042L5								NUT (96906)	1	
-52	AN960-516								WASHER (88044)	1	
-53	AN175H12								BOLT (88044)	1	
-54	793469-1								LEVER, MLG fwd door roller position	1	
-55	762474								ROLLER ASSY, MLG door latch	1	
									Attaching Parts		
-56	MS21042L4								NUT (96906)	1	
									*		
-57	MS21042L5								NUT (96906)	1	
-58	MS20002-5								WASHER (96906)	1	
-59	AN960-516L								WASHER (88044)	11	
-60	MS20002C5								WASHER (96906)	1	
-61	MS20005-22								BOLT (96906)	1	
-62	793473-1								TERMINAL, MLG fwd door latch turnbuckle	1	
-63	793473-3								TERMINAL, MLG fwd door latch turnbuckle	1	
-64	793472-1								TURNBUCKLE, MLG door latch	1	
-65	793432-35								BEAM ASSY, MLG fwd door *(see fig. 61)*	1	
	793432-36								BEAM ASSY, MLG fwd door *(see fig. 61)*	1	
-66	793426-2								BRACKET, MLG fwd door latch lever (LH)	1	
	793426-1								BRACKET, MLG fwd door latch lever (RH)	1	
									Attaching Parts		
-67	NAS623-3-4								SCREW (80205)	11	
-68	NAS623-3-6								SCREW (80205)	6	
-69	NAS623-3-7								SCREW (80205)	3	
-70	NAS1104-6								BOLT (80205)	6	
-71	NAS1104-7								BOLT (80205)	2	
-72	AN960D10								WASHER (88044)	8	
-73	MS21042L3								NUT (96906)	8	
-74	MS21042L4								NUT (96906)	8	
									*		
-75	797790-1								FITTING ASSY, MLG fwd uplock support	1	
	797790-2								FITTING ASSY, MLG fwd door uplock support	1	

Figura e particolare	NDR	1 2 3 4 5 6 7 DENOMINAZIONE	Quant.	Codice applicab.
239	797775-1	BRACKET ASSY, MLG fwd door support	1	6701-6815
	797775-101	BRACKET ASSY, MLG fwd door support	1	6816-
-76	797775-3	. BRACKET, MLG fwd door uplock support	1	
		Attaching Parts		
-77	NAS1104-12	. BOLT (80205)	4	
	AN960-416	. WASHER (88044)	8	
	MS21042L4	. NUT (96906)	4	
		*		
	797787-1	. PAD, MLG fwd door support bracket	1	6701-6815
	797787-101	. PAD, MLG fwd door support bracket	1	6816-
		Attaching Parts		
	AN515-6R8	. SCREW (88044)	2	
	AN960D6	. WASHER (88044)	2	
	MS21042L6	. NUT (96906)	2	
		*		
-78	762695	PLATE, MLG fwd door uplock support	1	
-79	763068-101	BUMPER ASSY, MLG fwd door (LH)	1	6701-6720
	763068-103	BUMPER ASSY, MLG fwd door (LH)	1	6721-
	763068-102	BUMPER ASSY, MLG fwd door (RH)	1	6701-6720
	763068-104	BUMPER ASSY, MLG fwd door (RH)	1	6721-
		Attaching Parts		
-80	AN502-416-14	SCREW (88044)	2	
-81	NAS623-4-7	SCREW (80205)	2	
-82	AN960D416	WASHER (88044)	4	
-83	MS21042L4	NUT (96906)	4	
		*		
-84	797795-1	. ANVIL, MLG fwd door bumper	1	
		Attaching Parts		
-85	NAS623-3-20	. SCREW (80205)	1	
-86	AN960-10L	. WASHER (88044)	1	
-87	MS21042L3	. NUT (96906)	1	
		*		
-88	726363-3	. BUMPER, MLG fwd door	1	
-89	AN960D10	. WASHER (88044)	1	
-90	MS20392-2C39	. PIN (96906)	1	
-90A	NAS43HT3-40	. SPACER (80205)	1	6721-
-91	AN320-4	. NUT (88044)	1	
	MS24665-132	. COTTER PIN (96906)	3	
-92	AN960-416	. WASHER (88044)	1	
-93	NAS1104-16D	. BOLT (80205)	1	
-94	AN960-10L	. WASHER (88044)	1	
-95	MS20392-2C17	. PIN (96906)	1	
-96	799272-101	. HOOK ASSY, MLG fwd door *(see fig. 241)*	1	
-97	726360-3	. . BEARING, MLG fwd door hook	2	
	NAS516-1	. . FITTING (lubrication) (80205)	1	
	763068-3	. PISTON ASSY, MLG fwd door	1	
-98	726362-3	. . WRIST PIN, MLG fwd door hook	1	
-99	763072	. . ROD, MLG fwd door hook	1	
-100	763076	. . PISTON, MLG fwd door	1	
-101	726361-3	. SPRING, MLG fwd door hook	1	
-102	763074	. BARREL, MLG fwd door spring	1	
-103	763069L	. BODY, MLG fwd door bumper	1	
	763069R	. BODY, MLG fwd door bumper	1	
-104	784430-1	CATCH, runway barrier cable (LH)	1	
	784430-2	CATCH, runway barrier cable (RH)	1	
		Attaching Parts		
-105	NAS1203-4	SCREW (80205)	2	
-106	NAS1203-5	SCREW (80205)	7	
-107	NAS1203-6	SCREW (80205)	9	

Figura e particolare	NDR	1 2 3 4 5 6 7 DENOMINAZIONE	Quant.	Codice applicab.
239-108	760215-133	DOOR, fwd MLG (LH) *(see fig. 61 for reqd)*	REF	
	760215-134	DOOR, fwd MLG (RH) *(see fig. 61 for repd)*	REF	
-109	763955	STOP ASSY, MLG fwd door *(see fig. 61 for reqd)*	REF	
-110	763956	. . SOCKET, MLG fwd door stop	1	
-111	763957	. . BUMPER, MLG fwd door stop	1	
-112	NAS513-8	. . WASHER (80205)	1	
-113	NAS509-8	. . NUT (80205)	1	

Figura e particolare	NDR	DENOMINAZIONE	Quant.	Codice applicab.
		MAIN LANDING GEAR AFT DOORS		
240	793518-101	DOOR INSTL, MLG aft (NHA 849140-101)	1	
	793518-102	DOOR INSTL, MLG aft (NHA 849140-101)	1	
- 1	793518-103	DOOR ASSY, MLG aft (LH)	1	
	793518-104	DOOR ASSY, MLG aft (RH)	1	
		Attaching Parts		
- 2	NAS623-3-4	SCREW (80205)	5	
- 3	NAS623-3-5	SCREW (80205)	1	
- 4	NAS623-3-7	SCREW (80205)	8	
- 5	NAS623-4-12	SCREW (80205)	10	
- 6	762653	HINGE PIN, MLG aft door	1	
- 7	762654L	HINGE, MLG aft door fwd	1	
	762654R	HINGE, MLG aft door fwd	1	
- 8	762655L	HINGE, MLG aft door center	1	
	762655R	HINGE, MLG aft door center	1	
- 9	762656L	HINGE, MLG aft door aft	1	
	762656R	HINGE, MLG aft door aft	1	
-10	771952-1	HINGE, MLG aft door (LH)	1	
	771952-2	HINGE, MLG aft door (RH)	1	
-11	762658L	FITTING ASSY, MLG aft door actuator	1	
	762658R	FITTING ASSY, MLG aft door actuator	1	
		Attaching Parts		
-12	NAS623-4-6	SCREW (80205)	6	
	AN960D416	WASHER (88044)	6	
	MS21042L4	NUT (96906)	6	
-13	726274-3	BUSHING, MLG aft door fitting	2	
-14	MS15001-1	FITTING (lubrication) (96906)	2	
-15	763149	BRACKET, MLG aft door roller lever	1	
		Attaching Parts		
-16	NAS1104-10	BOLT (80205)	1	
-16A	NAS1104-12	BOLT (80205)	1	
-17	NAS1104-16	BOLT (80205)	2	
-18	NAS1104-18	BOLT (80205)	2	
	AN960D416	WASHER (88044)	6	
	MS21042L4	NUT (96906)	6	
-19	763230	LEVER ASSY, MLG aft door	1	
-20	MS21042L7	NUT (96906)	1	
-21	AN960-716L	WASHER (88044)	8	
-22	AN7-21	BOLT (96906)	1	
-23	MS21042L4	NUT (96906)	1	
-24	AN960-516L	WASHER (88044) (6 to 9 reqd) (use odd washer on nut side only)	AR	
-25	726334-3	BOLT, MLG door lever	1	
-26	763150	LEVER, MLG aft door latch	1	
-27	MS21042L4	NUT (96906)	1	
-28	762474	ROLLER ASSY, MLG door latch	1	
-29	AN316-8R	NUT (88044)	1	
-30	NAS460-816	WASHER (80205)	1	
-30A	763230-101	WASHER (make from LS1785-816)	1	
-31	761927	CAP, MLG door latch lever	1	
-32	761928	SOCKET, MLG door latch lever	1	
-33	761926	LINK, MLG door latch lever	1	
-34	760216-61	DOOR, MLG inspection (LH)	1	
	760216-62	DOOR, MLG inspection (RH)	1	
		Attaching Parts		
-35	NAS517-3-2	SCREW (80205)	22	
-36	NAS517-3-3	SCREW (80205)	14	

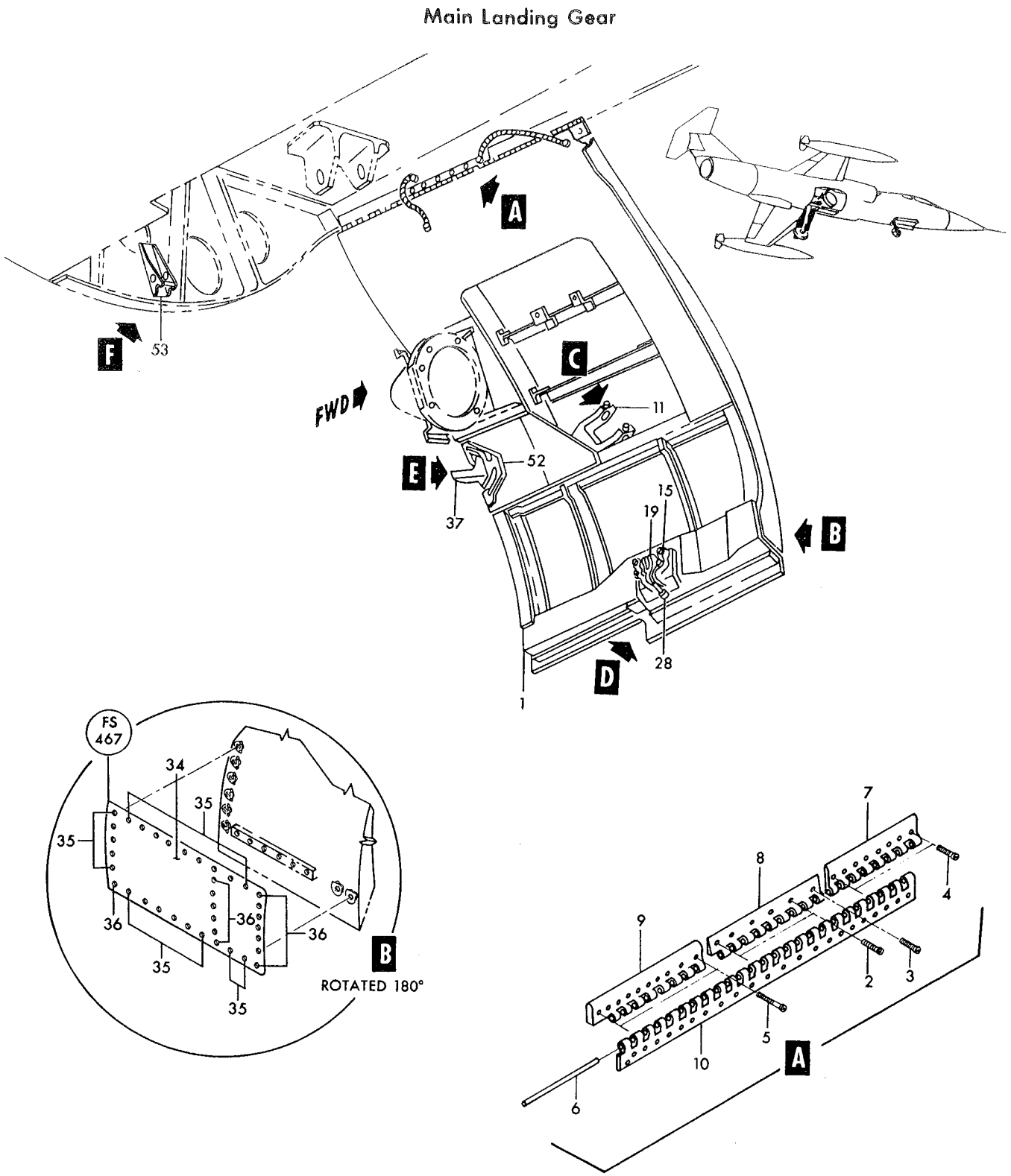

Figure 240—Main Landing Gear Aft Doors (Sheet 1 of 2)

Main Landing Gear

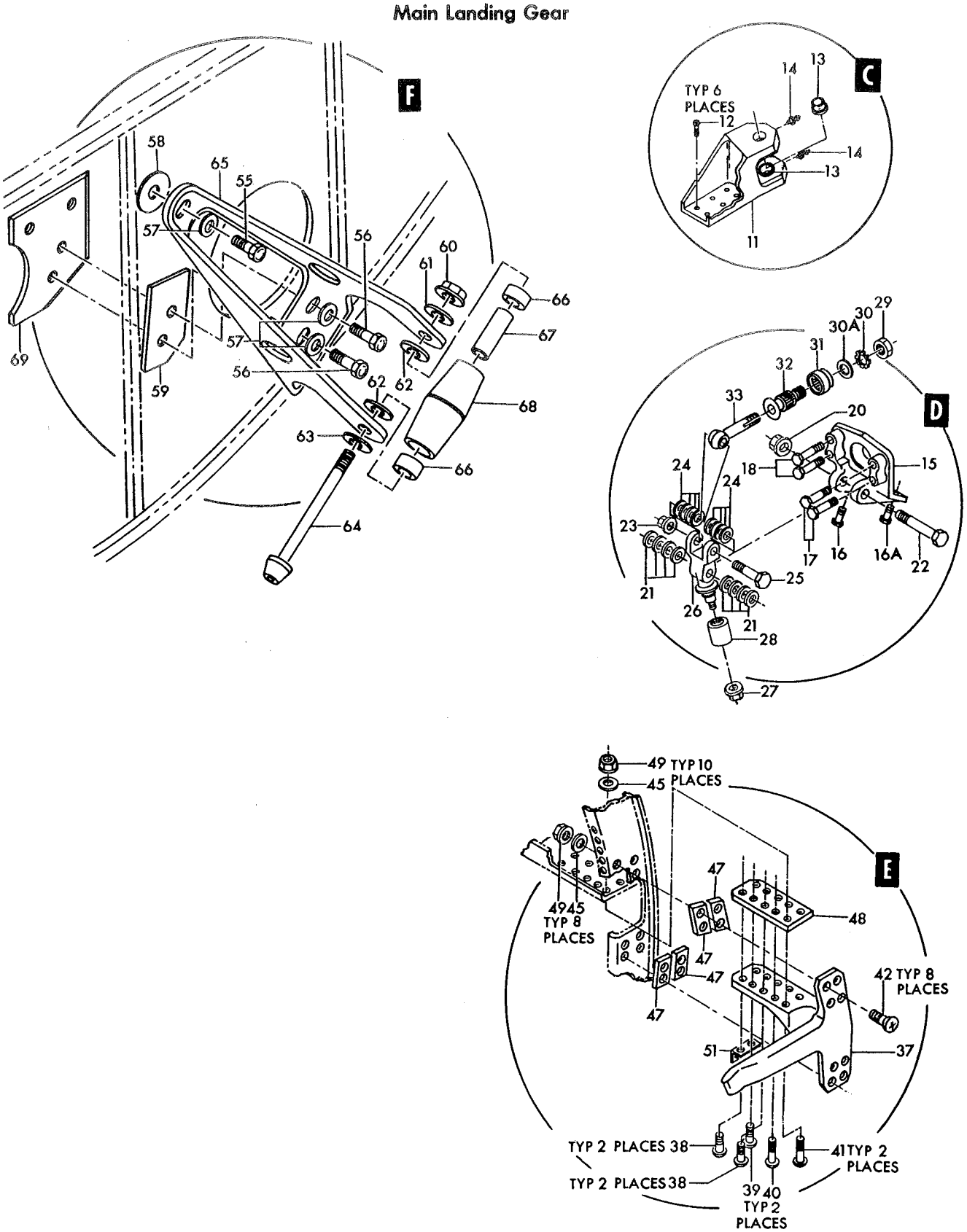

Figure 240—Main Landing Gear Aft Doors (Sheet 2 of 2)

Figura e particolare	NDR	1 2 3 4 5 6 7 DENOMINAZIONE	Quant.	Codice applicab.
240	761738-3L	BRACKET INSTL, landing light *(see fig. 199)*	1	
	761738-3R	BRACKET INSTL, landing light *(see fig. 199)*	1	
-37	798312-101	GUIDE, MLG aft door (LH)	1	
	798312-102	GUIDE, MLG aft door (RH)	1	
		Attaching Parts		
-38	NAS623-3-7	SCREW (80205)	4	
-39	NAS623-3-5	SCREW (80205)	2	
-40	NAS623-3-10	SCREW (80205)	2	
-41	NAS623-3-12	SCREW (80205)	2	
-42	NAS1203-4	SCREW (80205)	8	
-45	AN960D10	WASHER (88044)	18	
-47	798343-101	FILLER, aft MLG door	4	
-48	798308-101	FILLER, aft MLG door (maximum 3)	AR	
-49	MS21042L3	NUT (96906)	18	
-51	798332-101	CLIP, aft MLG door (LH)	1	
	798332-102	CLIP, aft MLG door (RH)	1	
		Attaching Parts		
	NAS623-3-3	SCREW (80205)	2	
	AN960D10	WASHER (88044)	2	
	MS21042L3	NUT (96906)	2	
-52	798311-101	GUSSET, MLG aft door (LH)	1	
	798311-102	GUSSET, MLG aft door (RH)	1	
		Attaching Parts		
	NAS1203-6	SCREW (80205)	6	
	AN960D10	WASHER (88044)	6	
	MS21042L3	NUT (96906)	6	
	798262-101	BRACKET INSTL, station 489 bulkhead roller (NHA 849140-101)	1	6701-6765
	798262-107	BRACKET INSTL, station 489 bulkhead roller (NHA 849140-101)	1	6766-
	798262-102	BRACKET INSTL, station 489 bulkhead roller (NHA 849140-101)	1	6701-6765
	798262-108	BRACKET INSTL, station 489 bulkhead roller (NHA 849140-101)	1	6766-
-53	798262-103	BRACKET ASSY, station 489 bulkhead roller (LH)	1	6701-6765
	798262-109	BRACKET ASSY, station 489 bulkhead roller (LH)	1	6766-
	798262-104	BRACKET ASSY, station 489 bulkhead roller (RH)	1	6701-6765
	798262-110	BRACKET ASSY, station 489 bulkhead roller (RH)	1	6766-
		Attaching Parts		
-55	NAS1103-12	BOLT (80205)	1	
-56	NAS1103-14	BOLT (80205)	2	
-57	LS881-4	WASHER, plain (36659)	3	
-58	798266-101	SHIM, station 489 bulkhead roller (maximum 18)	AR	
-59	798267-101	SHIM, station 489 bulkhead roller (maximum 18)	AR	
-60	MS21042L4	NUT (96906)	1	
-61	AN960D416	WASHER (88044)	1	
-62	AN960D416L	WASHER (88044)	AR	
-63	MS20002C4	WASHER (96906)	1	
-64	MS20004-42	BOLT (96906)	1	
-65	798263-101	BRACKET, station 489 bulkhead roller (LH)	1	6701-6765
	798263-103	BRACKET, station 489 bulkhead roller (LH)	1	6766-
	798263-102	BRACKET, station 489 bulkhead roller (RH)	1	6701-6765
	798263-104	BRACKET, station 489 bulkhead roller (RH)	1	6766-
	798264-105	ROLLER ASSY, station 489 bulkhead bracket	1	
-66	NAS505-4	BEARING (80205)	2	
-67	798264-107	SPACER, station 489 bulkhead bracket	1	
-68	798264-109	ROLLER, station 489 bulkhead bracket	1	
	798262-105	ATTACHMENT INSTL, station 489 bulkhead roller *(see fig. 31 for reqd)*	REF	
	798262-106	ATTACHMENT INSTL, station 489 bulkhead roller *(see fig. 31 for reqd)*	REF	
-69	798265-101	PLATE ASSY, station 489 bulkhead roller (LH)	1	
	798265-102	PLATE ASSY, station 489 bulkhead roller (RH)	1	
		Attaching Parts		
	NAS517-3-4	SCREW (80205)	2	

Figura e particolare	NDR	DENOMINAZIONE 1 2 3 4 5 6 7	Quant.	Codice applicab.
		MAIN LANDING GEAR DOORS ACTUATING MECHANISM		
241	792848-103	DOOR MECHANISM INSTL, MLG (NHA 849140-101)	1	6701-6740
	792848-107	DOOR MECHANISM INSTL, MLG (NHA 849140-101)	1	6741-6815
	792848-109	DOOR MECHANISM INSTL, MLG (NHA 849140-101)	1	6816-6865
	792848-111	DOOR MECHANISM INSTL, MLG (NHA 849140-101)	1	6866-
	792848-105	DOOR MECHANISM INSTL, MLG fwd	1	6701-6865
	792848-113	DOOR MECHANISM INSTL, MLG fwd	1	6866-
	792848-106	DOOR MECHANISM INSTL, MLG fwd	1	6701-6865
	792848-114	DOOR MECHANISM INSTL, MLG fwd	1	6866-
- 1	788593-501	CYLINDER ASSY, MLG fwd door (see T.O. 9H2-2-36-13) *(see fig. 118 and 120)*	1	6701-6865
	788593-101	CYLINDER ASSY, MLG fwd door (see T.O. 9H2-2-36-13) *(see fig. 118 and 120)*	1	6866-
- 3	794360-1	PIN, MLG fwd door cylinder	1	
- 4	794361-1	KEEPER, MLG fwd door cylinder pin	1	
	794361-2	KEEPER, MLG fwd door cylinder pin	1	
		Attaching Parts		
- 5	NAS623-3-5	SCREW (80205)	2	
	MS21042L3	NUT (96906)	2	
		*		
- 6	AN960-1016L	WASHER (4 to 9 as reqd) (88044)	AR	
- 7	763065-101	STOP ASSY, MLG fwd door	1	
	763065-102	STOP ASSY, MLG fwd door	1	
- 8	763065-3L	STOP, MLG fwd door	1	
	763065-3R	STOP, MLG fwd door	1	
- 9	799273-101	PLATE, MLG fwd door stop	1	
-10	AN507-1032R12	SCREW (88044)	2	
-11	MS21042L3	NUT (96906)	2	
-12	AN310-4	NUT (88044)	1	
-13	AN24-23	BOLT (88044)	1	
-14	726835-3	ROLLER, MLG door	1	
-15	AN310-4	NUT (88044)	3	
-16	AN4-33	BOLT (88044)	1	
-17	AN4-45	BOLT (88044)	1	
-18	AN4-52	BOLT (88044)	1	
-19	763067	LINK ASSY, MLG fwd door stop actuating	1	
-20	BSSR4425G	BEARING, self-aligning spherical (81376)	2	
-21	NAS516-1	FITTING (lubrication) (80205)	2	
-22	AN960-10	WASHER (88044)	2	
-23	MS20392-2C13	PIN (96906)	2	
-24	794533-1	LINK ASSY, MLG door switch	1	
	762260-13	DOOR MECHANISM INSTL, MLG aft (LH)	1	
	762260-14	DOOR MECHANISM INSTL, MLG aft (RH)	1	
-25	797841-1	ROD ASSY, MLG aft door (LH)	1	
	797841-2	ROD ASSY, MLG aft door (RH)	1	
-27	797840-1	ROD, MLG aft door (LH)	1	
	797840-2	ROD, MLG aft door (RH)	1	
-32	797841-3	CLEVIS ASSY, MLG aft door rod	1	
-33	797839-1	CAP, MLG aft door rod	1	
-34	797834-1	CLEVIS ASSY, MLG aft door rod	1	
-35	797881-101	DECAL, MLG aft door rod clevis	1	
-36	797880-1	SPRING, MLG aft door rod	1	
-37	797836-1	BOLT, MLG aft door rod	1	
-38	798254-1	CYLINDER, MLG aft door rod	1	
-39	AN320-6	NUT (88044)	2	
-40	AN960-616	WASHER (88044)	2	
-41	AN960D616	WASHER (88044)	1	
-42	726246	BOLT, MLG aft door rod	1	
-43	NAS1106-28D	BOLT (80205)	1	
-44	762252	PIN, MLG aft door rod	1	

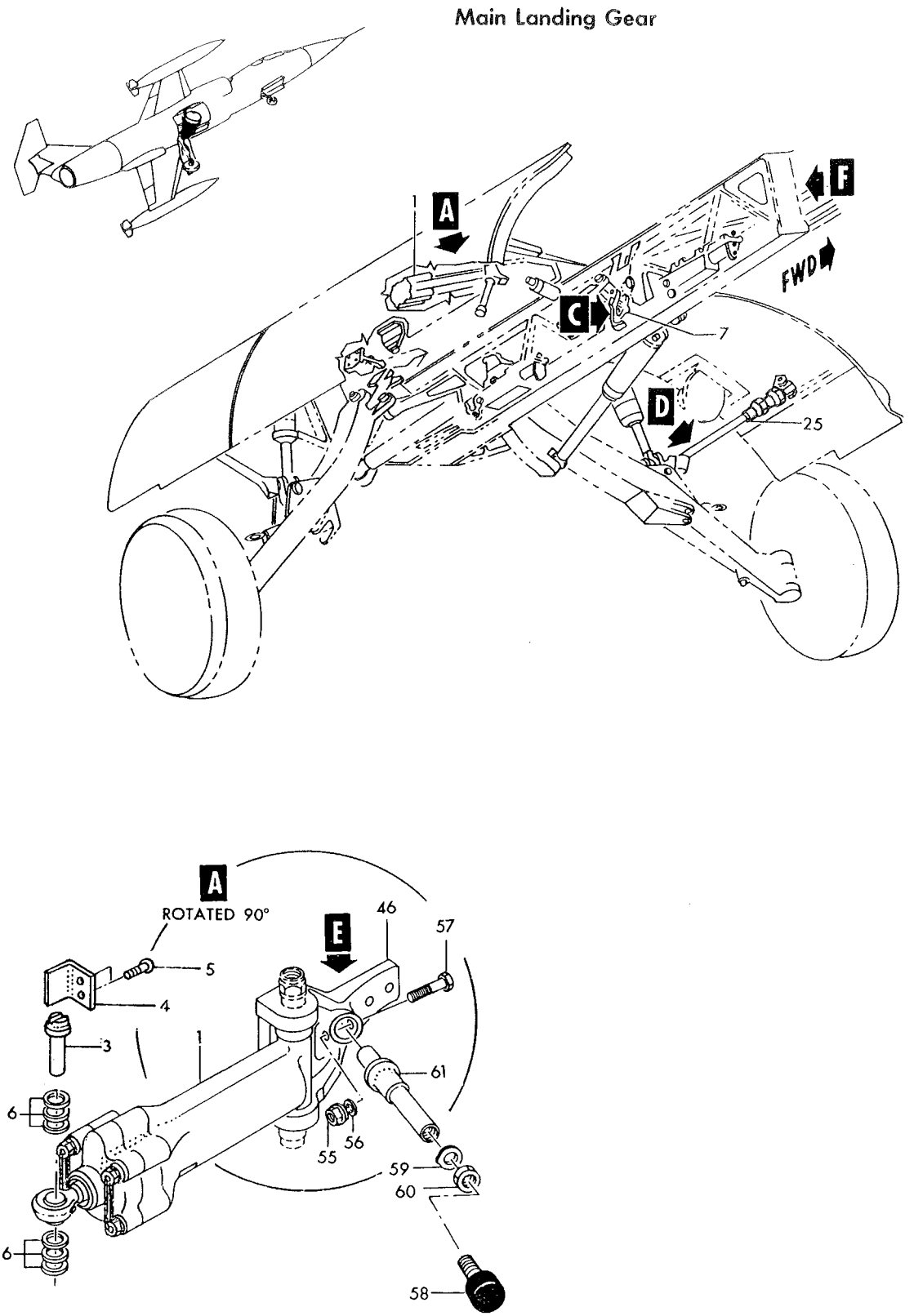

P56-14-247

Figure 241—Main Landing Gear Doors Actuating Mechanism (Sheet 1 of 2)

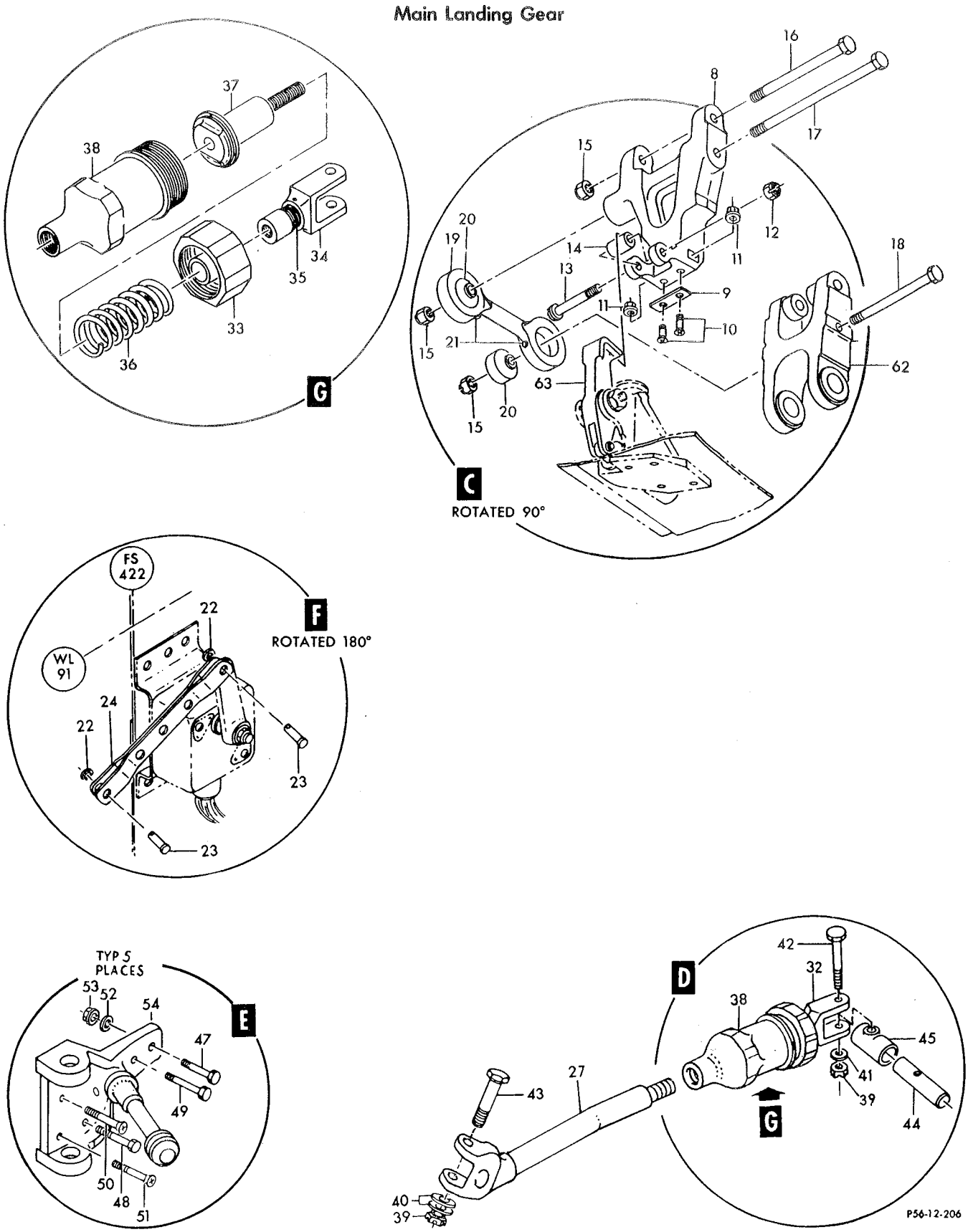

Figure 241—Main Landing Gear Doors Actuating Mechanism (Sheet 2 of 2)

Figura e particolare	NDR	DENOMINAZIONE 1 2 3 4 5 6 7	Quant.	Codice applicab.
241-45	762251	UNIVERSAL, MLG aft door rod	1	
	762260-5	LATCH INSTL, MLG door *(see fig. 242)*	1	6701-6740
	762260-101	LATCH INSTL, MLG door *(see fig. 242)*	1	6741-6815
	762260-105	LATCH INSTL, MLG door *(see fig. 242)*	1	6816-
-46	794527-7	BRACKET ASSY, MLG fwd door (LH) *(see fig. 40 for reqd)*	REF	
	794527-8	BRACKET ASSY, MLG fwd door (RH) *(see fig. 40 for reqd)*	REF	
		Attaching Parts		
-47	NAS1105-12D	BOLT (80205)	1	
-48	NAS1105-13D	BOLT (80205)	1	
-49	NAS1105-15D	BOLT (80205)	1	
-50	NAS1155-10	SCREW (80205)	1	
-51	NAS1155-14	SCREW (80205)	1	
-52	AN960D516	WASHER (88044)	5	
-53	MS21042L5	NUT (96906)	5	
-54	788638-1	BRACKET, MLG fwd door cylinder (LH)	1	
	788638-2	BRACKET, MLG fwd door cylinder (RH)	1	
-55	MS21042L4	NUT (96906)	1	
-56	AN960D416	WASHER (88044)	1	
-57	NAS1104-20	BOLT (80205)	1	
-58	794438-101	BUMPER ASSY, MLG upstop	1	
-59	NAS513-8	WASHER (80205)	1	
-60	NAS509-8	NUT (80205)	1	
-61	798255-103	SUPPORT, MLG upstop (LH)	1	
	798255-104	SUPPORT, MLG upstop (RH)	1	
-62	784857-1	LINK ASSY, MLG drag strut *(see fig. 238 for reqd)*	REF	6701-6753
	784857-101	LINK ASSY, MLG drag strut *(see fig. 238 for reqd)*	REF	6754-
-63	799272-101	HOOK ASSY, MLG fwd door *(see fig. 239 for reqd)*	REF	

Figura e particolare	NDR	DENOMINAZIONE 1 2 3 4 5 6 7	Quant.	Codice applicab.
		MAIN LANDING GEAR DOOR MECHANISM LATCHES		
242	762260-5	. LATCH INSTL, MLG door mechanism *(see fig. 241 for reqd)*	REF	6701-6740
	762260-101	. LATCH INSTL, MLG door mechanism *(see fig. 241 for reqd)*	REF	6741-6815
	762260-105	. LATCH INSTL, MLG door mechanism *(see fig. 241 for reqd)*	REF	6816-
- 1	763247-4	. . BRACKET ASSY, MLG manual release *(see fig. 88)*	1	
- 2	762260-6L	. . LATCH ASSY, MLG fwd door *(see fig. 88)*	1	6701-6815
	762260-107	. . LATCH ASSY, MLG fwd door *(see fig. 88)*	1	6816-
- 3	762260-6R	. . LATCH ASSY, MLG fwd door *(see fig. 88)*	1	6701-6815
	762260-108	. . LATCH ASSY, MLG fwd door *(see fig. 88)*	1	6816-
- 4	762260-7L	. . LATCH ASSY, MLG aft door *(see fig. 88)*	1	6701-6740
	762260-103	. . LATCH ASSY, MLG aft door *(see fig. 88)*	1	6741-6815
	762260-109	. . LATCH ASSY, MLG aft door *(see fig. 88)*	1	6816-
- 5	762260-7R	. . LATCH ASSY, MLG aft door *(see fig. 88)*	1	6701-6740
	762260-104	. . LATCH ASSY, MLG aft door *(see fig. 88)*	1	6741-6815
	762260-110	. . LATCH ASSY, MLG aft door *(see fig. 88)*	1	6816-
		Attaching Parts		
- 6	AN176H33	. . BOLT (88044)	2	
- 7	AN174H32A	. . BOLT (88044)	1	
- 8	AN960D616	. . WASHER (88044)	2	
- 9	AN960-416	. . WASHER (88044)	1	
-10	MS21042L6	. . NUT (96906)	2	
-11	MS21042L4	. . NUT (96906)	1	
-12	AN320-3	. . . NUT (88044)	1	
-13	AN960-10	. . . WASHER (fwd latches only) (88044)	1	
-14	726259-3	. . . BOLT, MLG door latch (fwd latches only)	1	
-15	AN310-4	. . . NUT (2 reqd fwd, 1 reqd aft) (88044)	AR	
-16	AN960-416L	. . . WASHER (88044)	8	
-17	763391-4	. . . ACTUATOR, MLG door switch (fwd latches only)	1	6701-6815
	852402-103	. . . ACTUATOR, MLG door switch (fwd latches only)	1	6816-
-18	763391-3	. . . ACTUATOR, MLG door switch (aft latches only)	1	6701-6815
	852402-101	. . . ACTUATOR, MLG door switch (aft latches only)	1	6816-
-19	761908-101	. . . FITTING, MLG aft door latch (aft latches only)	1	6701-6740
	761908-103	. . . FITTING, MLG aft door latch (aft latches only)	1	6741-
-20	761899	. . . FITTING, MLG fwd door latch (fwd latches only)	1	
-21	AN280H204	. . . KEY (fwd latches only) (88044)	1	
-22	770686-17	. . . LATCH ASSY, MLG door (LH) (see T.O. 16L1-4-7-3) *(see fig. 118 and 119)*	1	
	770686-18	. . . LATCH ASSY, MLG door (RH) (see T.O. 16L1-4-7-3) *(see fig. 120)*	1	

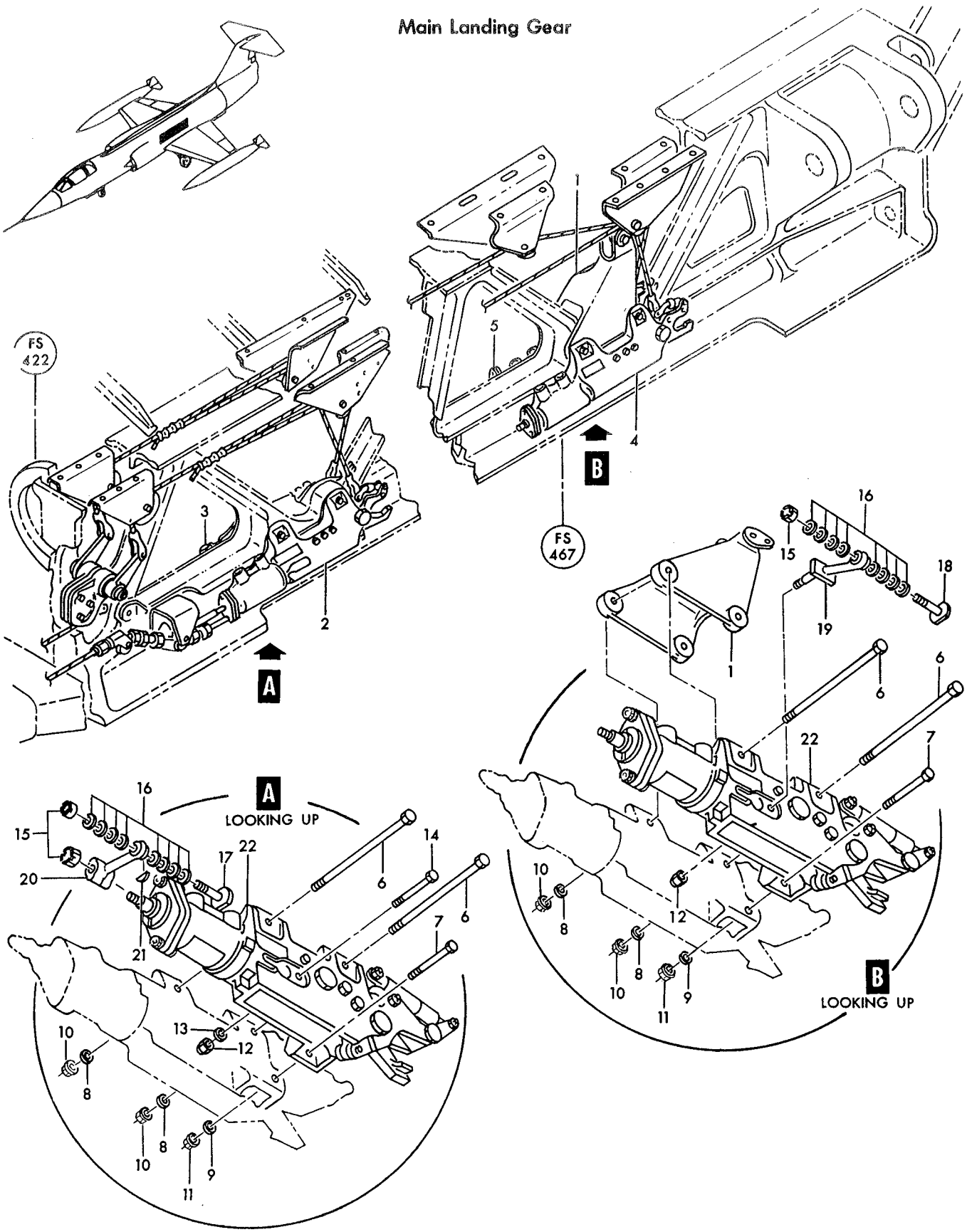

Figure 242—Main Landing Gear Door Mechanism Latches

Figura e particolare	NDR	1 2 3 4 5 6 7 DENOMINAZIONE	Quant.	Codice applicab.
		POWER PLANT		
243	850313-101	. POWER PLANT INSTALLATION (NHA 849071-101)	1	6701-6790; 6831-
	852778-101	A. POWER PLANT INSTALLATION (NHA 849071-101)	1	6791-6830
- 1	850710-101	. . SHAFT AND HANDLE ASSY, main engine mount (LH) *(see fig. 251)*	1	
	850710-102	. . SHAFT AND HANDLE ASSY, main engine mount (RH) *(see fig. 251)*	1	
- 2	760932-101	. . LEAF INSTL, forward thrust engine mount *(see fig. 251)*	1	
	760932-102	. . LEAF INSTL, forward thrust engine mount *(see fig. 251)*	1	
	780045-101	. . SHIM INSTL, engine mount (LH) *(see fig. 251)*	AR	
	780045-102	. . SHIM INSTL, engine mount (RH) *(see fig. 251)*	AR	
	780045-103	. . SHIM INSTL, engine mount (LH) *(see fig. 251)*	AR	
	780045-104	. . SHIM INSTL, engine mount (RH) *(see fig. 251)*	AR	
	780045-105	. . SHIM INSTL, engine mount (LH) *(see fig. 251)*	AR	
	780045-106	. . SHIM INSTL, engine mount (RH) *(see fig. 251)*	AR	
	780045-107	. . SHIM INSTL, engine mount (LH) *(see fig. 251)*	AR	
	780045-108	. . SHIM INSTL, engine mount (RH) *(see fig. 251)*	AR	
	780045-109	. . SHIM INSTL, engine mount (LH) *(see fig. 251)*	AR	
	780045-110	. . SHIM INSTL, engine mount (RH) *(see fig. 251)*	AR	
	MM1501	. . CATCH, quick release (91927) *(see fig. 252)*	1	
- 3	AN815-12D	. . UNION (88044)	1	
	AN5H11A	. . BOLT (88044) *(see fig. 245)*	6	
	AN960-516L	. . WASHER (88044) *(see fig. 245)*	6	
	460-015-40	. . GASK-O-SEAL (83259) *(see fig. 245)*	1	
- 4	777215-7	. . DIPSTICK INSTL, engine oil tank *(see fig. 248)*	1	
	850312-101	. . ENGINE ASSY, F104S turbojet	1	6701-6790; 6831;
	852777-105	A. . ENGINE ASSY, F104S turbojet	1	6791-6830
- 5	J79GE-19	. . . ENGINE, aircraft turbojet (07482)	1	
	850312-103	. . . KIT ASSY, Q.E.C. (pack up) *(see fig. 244, 245 and 246)*	1	6701-6790; 6831-
	852777-107	A. . . KIT ASSY, Q.E.C. (pack up) *(see fig. 244, 245 and 246)*	1	6791-6830
	1000-00-300-1	. . . . RADIATOR SOURCE, nucleonic oil quantity indicating system (24494) (Lockheed spec dwg 740287-101) *(see fig. 248)*	1	6701-6740
	1000-00-200-1	. . . . BRIDLE ASSY, nucleonic oil quantity indicating system (24494) (Lockheed spec dwg 740288-101) *(see fig. 248)*	1	6701-6740
	1000-00-400	. . . . DETECTOR, nucleonic oil quantity indicating system (24494) (Lockheed spec dwg 740350-101) *(see fig. 248)*	1	6701-6740
	849007-103	. . . . BRACKET, nucleonic oil quantity indicating system, electrical recp *(see fig. 248)*	1	6701-6740
	851478-101	. . . . SHIELD, radiation detector *(see fig. 248)*	1	6701-6740
- 6	777215-9	. . . . FITTING INSTL, engine oil tank dipstick *(see fig. 248)*	1	
- 7	28B23-15A	. . . . GENERATOR, (G2000) turbine driven A.C. (A2547) (see sep. pub. whn avail.) *(see fig. 244)*	2	
- 8	2CM9ABB6	. . . . GENERATOR, tachometer (97424) (Lockheed spec dwg 620730-1) (see T.O. 5E5-3-33-3)	1	
		Attaching Parts		
- 9	AN960D416L	. . . . WASHER (88044)	4	
-10	MS21042L4	. . . . NUT (96906)	4	
-11	764140	. . . . FAIRING ASSY, engine starter *(see fig. 253)*	1	
-12	589835	. . . . STARTER, (E23) aircraft engine pneumatic (A0076) (73030) (Lockheed spec dwg 632234-103) (see T.O. 2JA3-13-14) *(see fig. 253)*	1	
-13	764165-105	. . . . DISCONNECT INSTL, engine starter *(see fig. 253)*	1	
-14	763297	. . . . ADAPTER INSTL, engine forward face *(see fig. 254)*	1	
-15	761167-17	. . . . ELBOW INSTL, primary heat exchanger *(see fig. 153)*	1	
-16	784222-7	. . . . DUCT INSTL, 17th stage seal leakage air *(see fig. 247)*	1	
-17	784222-8	. . . . DUCT INSTL, 17th stage seal leakage air *(see fig. 247)*	1	
-19	771956-3	. . . . ELBOW INSTL, engine boundary layer control *(see fig. 12)*	1	
-21	776085-103	. . . . PUMP INSTL, engine oil tank hand *(see fig. 250)*	1	
-22	780171-1	. . . . HANGER ASSY, front engine mount *(see fig. 251)*	1	
-23	761723	. . . . SEAL, front engine mount *(see fig. 251)*	1	

A - Only per partial incorporation of SPU system

Power Plant

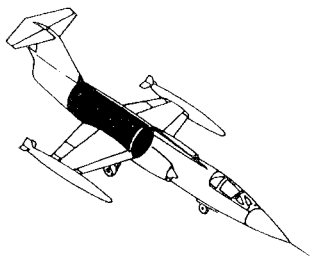

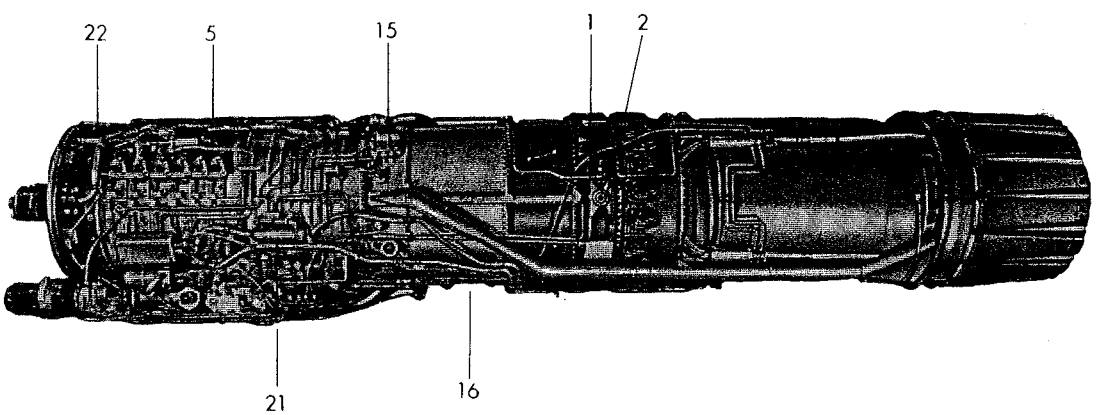

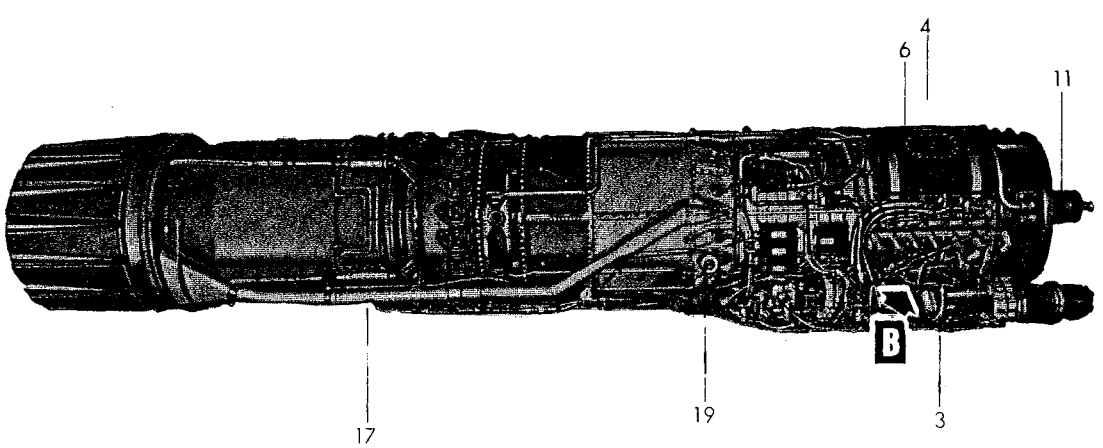

Figure 243-Power Plant (Sheet 1 of 2)

Power Plant

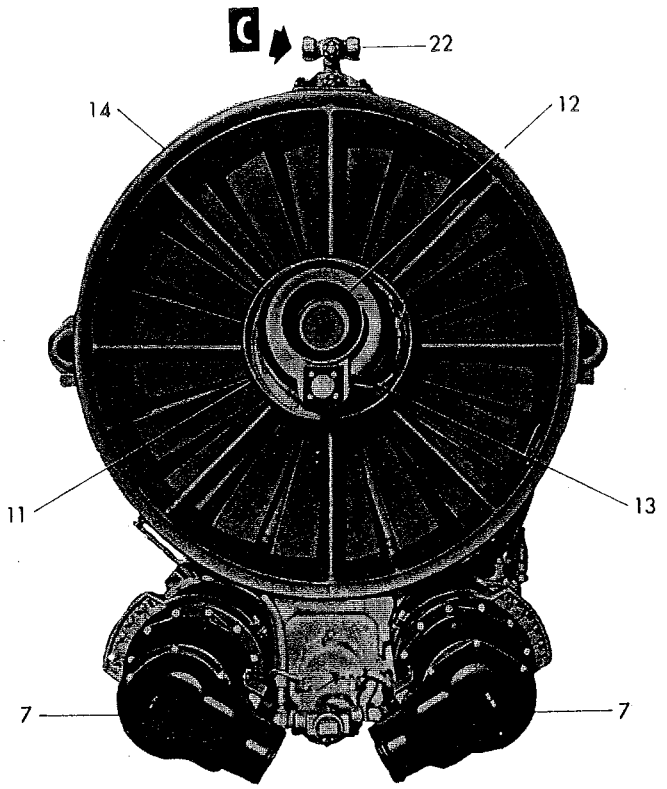

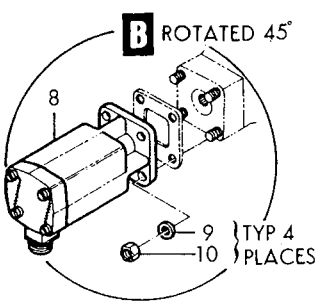

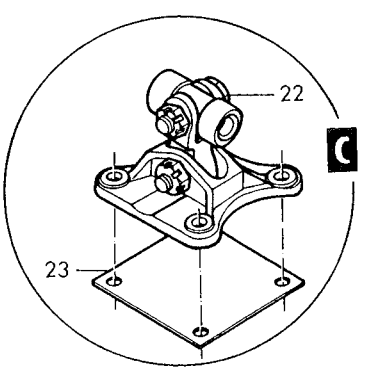

Figure 243-Power Plant (Sheet 2 of 2)

Figura e particolare	NDR	1	2	3	4	5	6	7	DENOMINAZIONE	Quant.	Codice applicab.
									POWER PLANT ELECTRICAL		
244	850312-103								KIT ASSY, Q.E.C. (pack up) *(see fig. 243 for reqd)*	REF	6701-6790; 6831-
	852777-107	C.							KIT ASSY, Q.E.C. (pack up) *(see fig. 243 for reqd)*	REF	6791-6830
- 1	28B23-15A								GENERATOR, (G2000) turbine driven A.C. (A2547) (see sep. pub. whn avail.) *(see fig. 243 for reqd)*	REF	
									Attaching Parts		
- 2	MS20002-6								WASHER (96906)	6	
- 3	1801-064								NUT (72962)	6	
									———— * ————		
- 4	MS9136-01								GASKET (96906) *(see fig. 245 and 253)*	2	
	849919-101								ELECTRICAL INSTL, power plant *(see fig. 253)*	1	
- 5	849598-101								HARNESS ASSY, oil pressure and fuel flow transmitter	1	
- 6	MS3100K22-19P								CONNECTOR, (J57) receptacle (P-21 disconnect) (96906)	1	
	MS3057-12A								ADAPTER (96906)	1	
									Attaching Parts		
	AN500A4-8								SCREW (88044)	4	
	MS21042L04								NUT (96906)	4	
									———— * ————		
- 7	MS3108K14S2S								CONNECTOR, (P113) plug (fuel flow transmitter) (96906)	1	
	MS3057-6A								ADAPTER (96906)	1	
- 8	TA716SS6F	A.							CLAMP (84971)	1	6701-6740
- 9	TA604SS4T								CLAMP (84971)	1	
-10	TA604SS5T								CLAMP (84971)	1	
-11	TA716SS2F								CLAMP (84971)	1	
-12	TA716SS3F	A.							CLAMP (84971)	9	6701-6740
-13	TA716SS4F								CLAMP (84971)	12	
-14	TA716SS5F								CLAMP (84971)	7	
-14A	TA716SS5F	A.							CLAMP (84971)	2	6701-6740
-15	TA716SS7F								CLAMP (84971)	2	
-16	TA716SS10F								CLAMP (84971)	1	
-17	TA716SS12F								CLAMP (84971)	1	
-18	TA716SS15F								CLAMP (84971)	3	
-19	TA716SS17F								CLAMP (84971)	2	
-20	TA716SS24F	A.							CLAMP (84971)	2	6701-6740
-20A	TA716SS10F	B.							CLAMP (84971)	1	
									Attaching Parts		
-21	LS9682C8								SCREW (36659)	9	
-21A	LS9682C8	A.							SCREW (36659)	5	6701-6740
-21B	LS9682C8	B.							SCREW (36659)	1	
-22	MS21043-5								NUT (96906)	2	
-23	MS21043-3								NUT (96906)	9	
-23A	MS21043-3	A.							NUT (96906)	5	6701-6740
-23B	MS21043-3	B.							NUT (96906)	1	
									———— * ————		
-24	9115-22C2A								TRANSMITTER, (TR3) fuel flow (A1996) (99251) (Lockheed spec dwg 620731-1) (see T.O. 5L13-2-8-24)	1	
									Attaching Parts		
-25	NAS1004-14								BOLT (80205)	3	
-26	AN960D416								WASHER (88044)	9	
-27	MS21043-4								NUT (96906)	3	
									———— * ————		
-28	MS29512-16								PACKING (96906)	2	

A - Removed per NOQIS SYSTEM
B - Reqd per AA.1F-104S-OT-164
C - Only per partial incorporation of SPU system

Power Plant

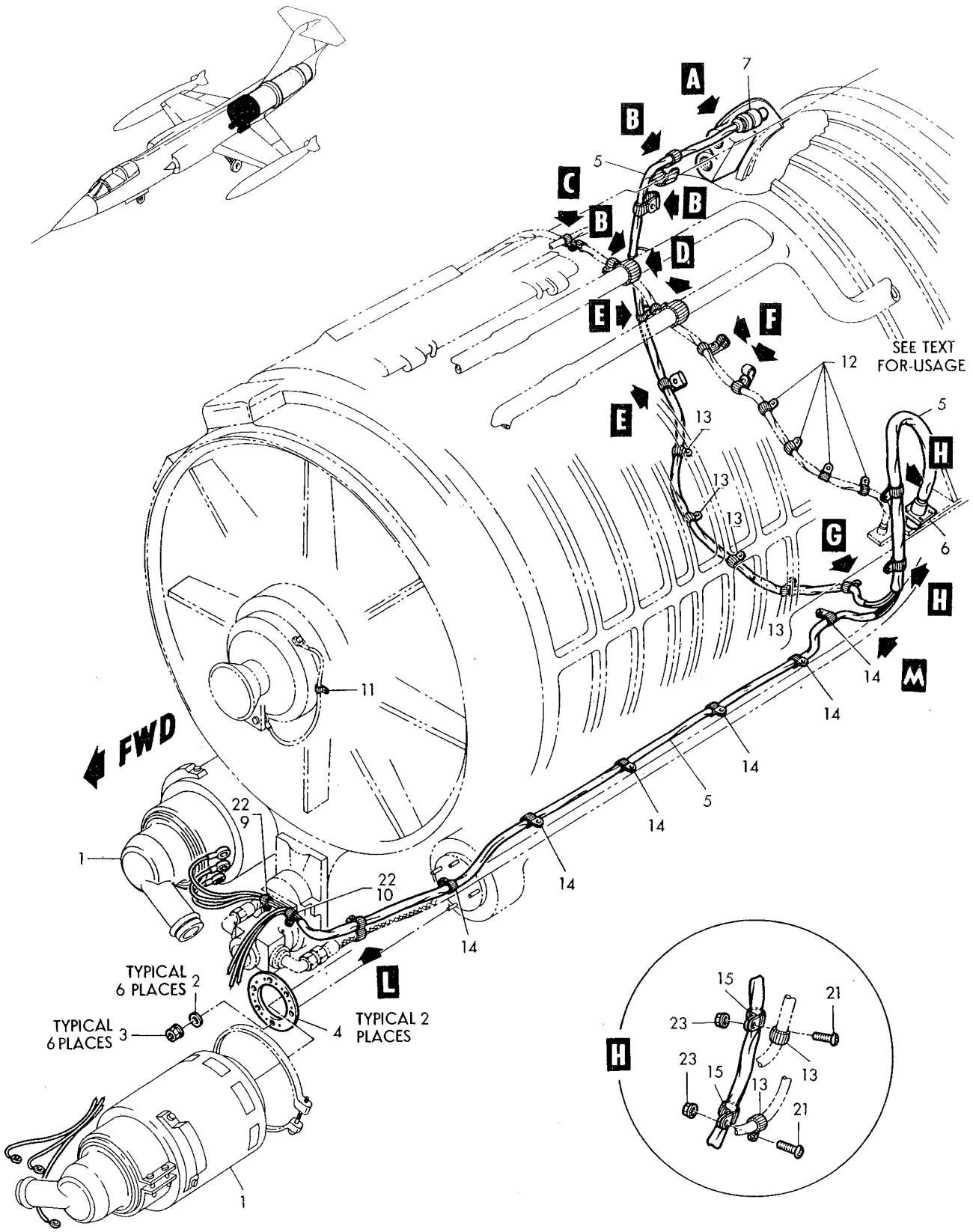

Figure 244–Power Plant Electrical (Sheet 1 of 2)

Power Plant

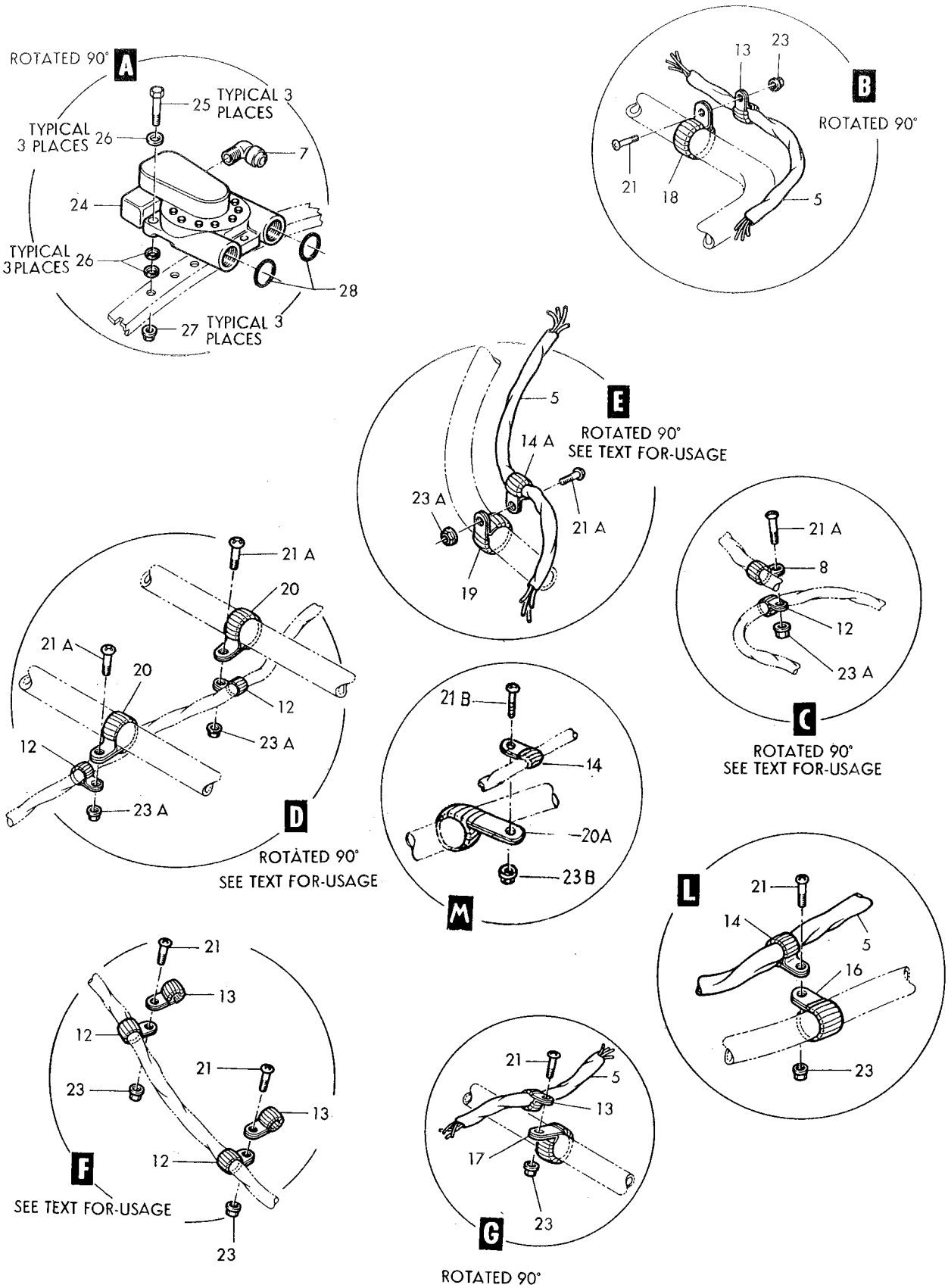

Figure 244–Power Plant Electrical (Sheet 2 of 2)

Figura e particolare	NDR	1 2 3 4 5 6 7 DENOMINAZIONE	Quant.	Codice applicab.
		POWER PLANT PLUMBING		
245	850312-103	. KIT ASSY, Q.E.C. (pack up) *(see fig. 243 for reqd)*	REF	6701-6790; 6831-
	852777-107	D. KIT ASSY, Q.E.C. (pack up) *(see fig. 243 for reqd)*	REF	6791-6830
-1	MS9136-01	. . GASKET (96906) *(see fig. 244 and 253)*	2	
-2	55032	. . PUMP, engine driven hydraulic (A1384) (75250) (Lockheed spec dwg 668418-3) (see T.O. 9H4-2-73-4)	2	
		Attaching Parts		
-3	MS20002-6	. . WASHER (96906)	6	
-4	1801-064	. . NUT, 550 degree light hex (72962)	6	
-5	601000-4-0094	. . HOSE ASSY, medium pressure (No. 1 pump seal drain) (00624)	1	
-6	601000-4-0112	. . HOSE ASSY, medium pressure (No. 2 pump seal drain) (00624)	1	
-7	AN834-4D	. . TEE (88044)	1	
-8	AN833-4D	. . ELBOW (88044)	1	
-9	LS4634-4	. . GASKET, straight threau tube fitting (36659) (whn exh use NAS1596-4)	2	
	NAS1596-4	. . PACKING (80205) (use LS4634-4 until exh)	REF	
-10	LS4764-4	. . RING, teflon hydraulic backup (36659)	2	
-11	AN6289-4	. . NUT (88044)	2	
-12	3305-6	C. . COUPLING HALF, quick disconnect female (00624) (Lockheed spec dwg 668430-3) *(see fig. 124)*	2	
	3301-6	. . . COUPLING HALF, quick disconnect female (00624)	1	
		Partial Breakdown Follows		
	22559-114	. . . . GASKET (00624)	1	
	22558-14	. . . . PACKING (00624)	1	
-13	R9800-6-0222	. . HOSE ASSY, hydraulic (No. 1 pump case fill and drain) (50599) *(see fig. 124)*	1	6701-6790; 6831-
-13A	MS8001G232A	D. . HOSE ASSY, hydraulic (No. 1 pump case fill and drain) (96906) *(see fig. 124)*	1	6791-6830
-14	R9800-6-0145	. . HOSE ASSY, hydraulic (No. 2 pump case fill and drain) (50599) *(see fig. 124)*	1	6701-6790; 6831-
-14A	MS8001G306A	D. . HOSE ASSY, hydraulic (No. 2 pump case fill and drain) (96906) *(see fig. 124)*	1	6791-6830
-15	LS4634-6	. . GASKET, straight thread tube fitting (36659) (whn exh use NAS1596-6)	4	
	NAS1596-6	. . PACKING (80205) (use LS4634-6 until exh)	REF	
-16	MS21908D6	. . ELBOW (96906)	1	
-16A	MS21908D6	. . ELBOW (96906)	1	6701-6790; 6831-
-16B	MS21907D6	D. . ELBOW (96906)	1	6791-6830
-17	LS4764-6	. . RING, teflon hydraulic backup (36659)	2	
-18	AN6289D6	. . NUT (88044)	2	
-19	330202-12	. . COUPLING quick disconnect male (00624) (Lockheed spec dwg 668429-7) *(see fig. 124)*	2	
		Partial Breakdown Follows		
	MS28774-025	. . . GASKET (96906)	1	
	MS28775-025	. . . PACKING (96906)	1	
	MS28774-212	. . . GASKET (96906)	1	
	MS28775-212	. . . PACKING (96906)	1	
-20	MS21924D12	A. . UNION (96906)	1	6701-6765
	MS21924-12	B. . UNION (96906)	1	6701-6790; 6831-
-21	AN941D12	. . ELBOW (88044)	1	6701-6790; 6831-
-22	AN6289D12	. . NUT (88044)	1	6701-6790; 6831-
-23	LS4764-12	. . RING, teflon hydraulic backup (36659)	1	6701-6790; 6831-
-24	LS4634-12	. . GASKET, straight thread tube fitting (36659) (whn exh use NAS1596-12)	3	
-24A	LS4634-12	. . GASKET, straight thread tube fitting (36659) (whn exh use NAS1596-12)	1	6701-6790; 6831-
	NAS1596-12	. . PACKING (80205) (use LS4634-12 until exh)	REF	
-24B	852718-101	D. . COUPLING, pump pressure	2	6791-6830
-25	370211-20	. . COUPLING HALF, quick disconnect male (00624) (Lockheed spec dwg 668429-11)	2	
-26	LS4634-20	. . GASKET, straight thread tube fitting (36659) (whn exh use NAS1596-20)	4	
	NAS1596-20	. . PACKING (80205) (use LS4634-20 until exh)	REF	
-27	728335-1	. . ELBOW, pump suction	2	
-28	LS4764-20	. . RING, teflon hydraulic backup (36659)	2	
-29	AN6289D20	. . NUT (88044)	2	
-29A	LS7358SST5	. . CLAMP, cushioned synthetic oil and fuel resistant loop (36659) *(see fig. 249)*	2	6741-

Power Plant

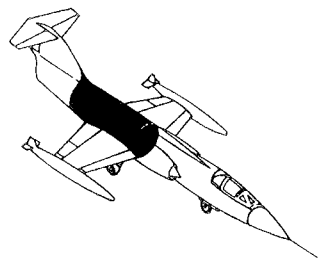

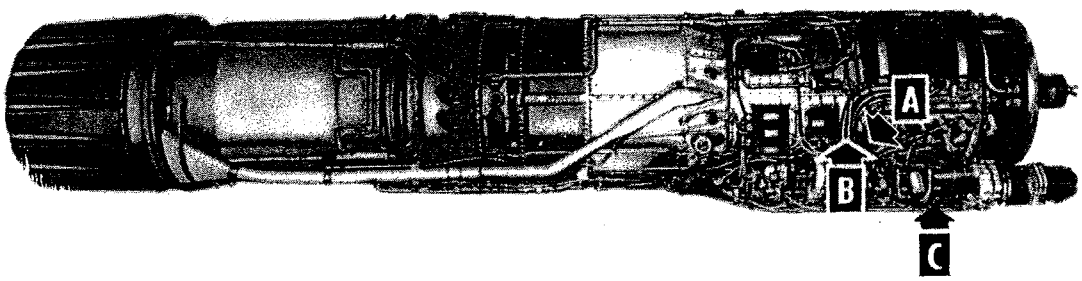

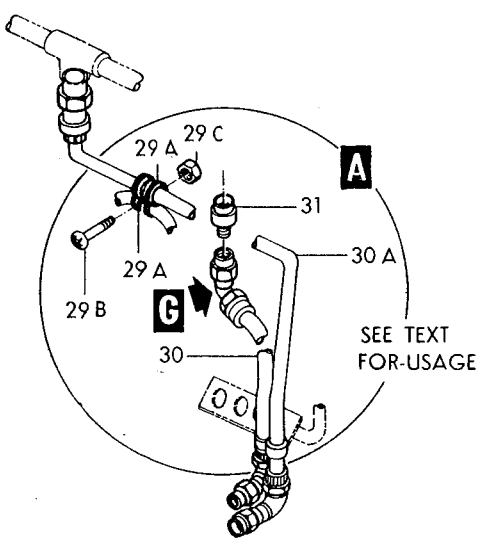

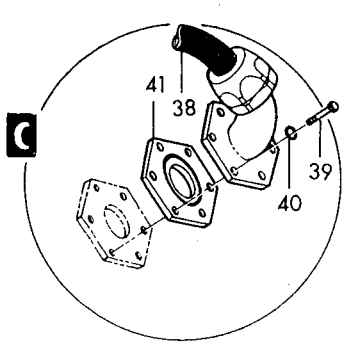

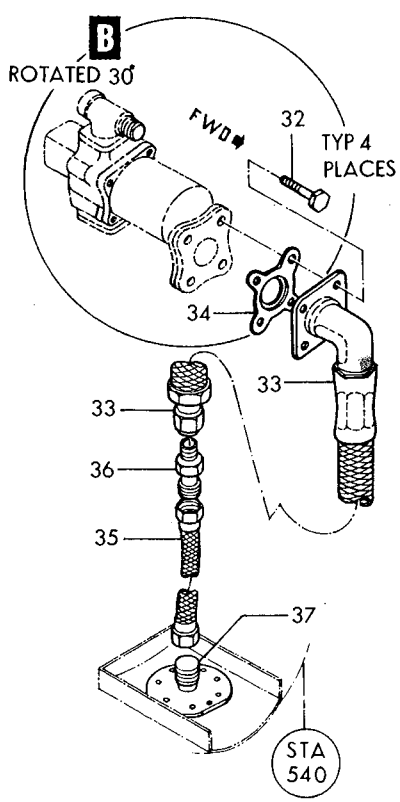

Figure 245-Power Plant Plumbing (Sheet 1 of 3)

Power Plant

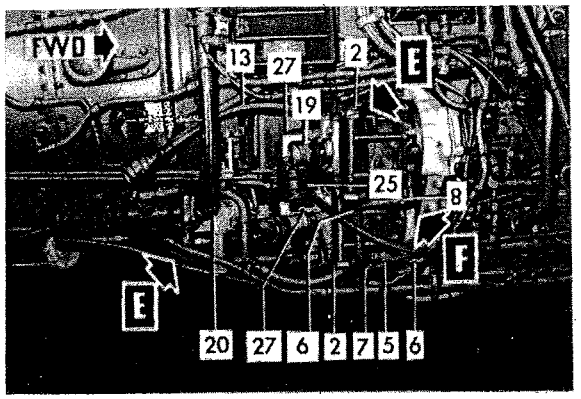

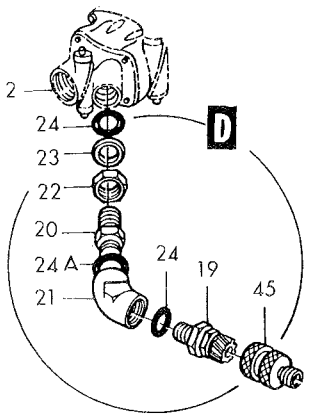

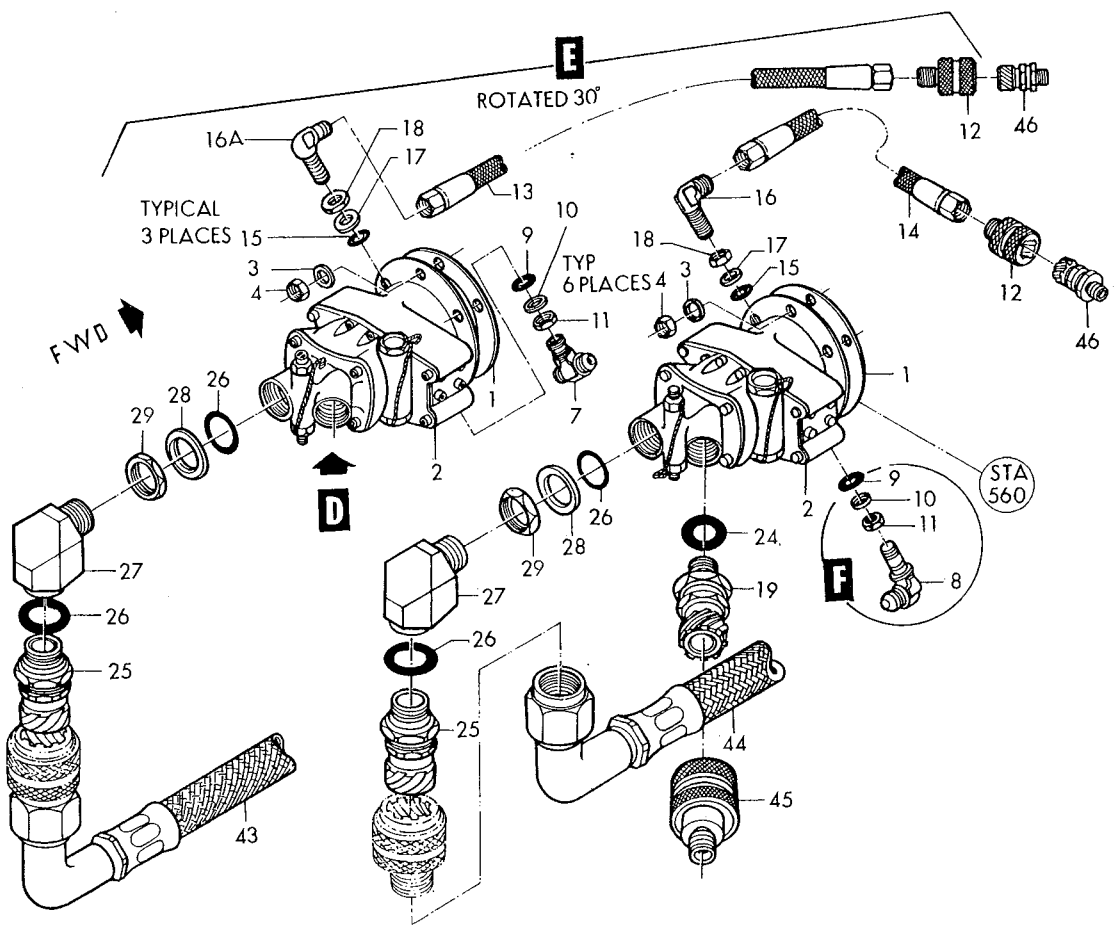

Figure 245-Power Plant Plumbing (Sheet 2 of 3)

Power Plant

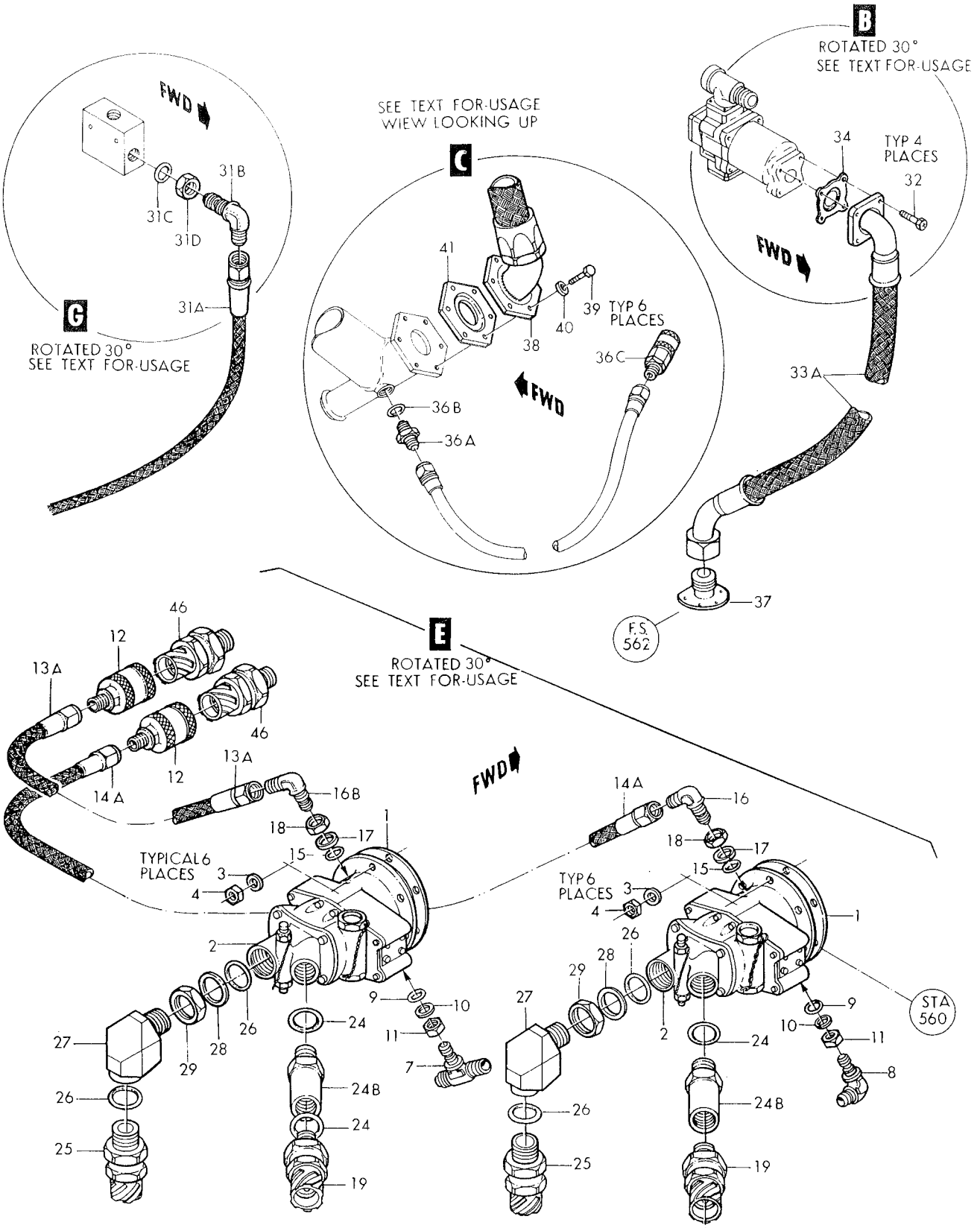

Figure 245-Power Plant Plumbing (Sheet 3 of 3)

Figura e particolare	NDR	1 2 3 4 5 6 7	DENOMINAZIONE	Quant.	Codice applicab.
			Attaching Parts		
245-29B	AN520-10R6	. .	SCREW (88044)	1	6741-
-29C	MS21042L3	. .	NUT (96906)	1	6741-
-30	R3826CC4-0132-0	. .	HOSE ASSY, oil pressure transmitter (50599) *(see fig. 249)*	1	6701-6790; 6831-
-30A	R3806CC4-0250	. .	HOSE ASSY, engine hydraulic pressure (50599) *(see fig. 249)*	1	6741-
-31	AN815-4C	. .	UNION (88044)	1	6701-6790; 6831-
-31A	MS8000E484A	D. .	HOSE ASSY, oil pressure transmitter (96906) *(see fig. 249)*	1	6791-6830
-31B	R294P04D	D. .	UNION (24446)	1	6791-6830
-31C	5140-534051-191	D. .	O-RING (02697)	1	6791-6830
-31D	MS9200-04	D. .	NUT (96906)	1	6791-6830
-32	AN3H5A	. .	BOLT (88044)	4	
-33	R20414-3	. .	HOSE ASSY, oil vent (50599)	1	6701-6790; 6831-
-33A	400109H0287C142	D. .	HOSE ASSY, oil vent (78570)	1	6701-6830
-34	460-715-16	. .	GASK-O-SEAL (83259)	1	
-35	785201-121	. .	TUBE ASSY, oil tank vent	1	6701-6790; 6831-
-36	AN815-16D	. .	UNION (88044)	1	6701-6790; 6831
-36A	AN815-6S	D. .	UNION (88044)	1	6791-6830
-36B	MS29512-06	D. .	PACKING (96906)	1	6791-6830
-36C	4573-2	D. .	COUPLER (78557)	1	6791-6830
-37	726646-3	.	FITTING, engine overboard 1 inch drain *(see fig. 113 for reqd)*	REF	
			Attaching Parts		
	NAS517-3-2	.	SCREW (80205)	6	
-38	028-601602R0185	.	HOSE ASSY, strainer to pump (00624) (Lockheed spec dwg 751000-3) *(see fig. 112 for reqd)*	REF	
-39	AN5H11A	.	BOLT (88044) *(see fig. 243 for reqd)*	REF	
-40	AN960-516L	.	WASHER (88044) *(see fig. 243 for reqd)*	REF	
-41	460-015-40	.	GASK-O-SEAL (83259) *(see fig. 243 for reqd)*	REF	
-43	R4705E0350L087	.	HOSE ASSY, hydraulic (No. 1 pump suction) (50599) *(see fig. 123 for reqd)*	REF	6701-6790; 6831-
-44	R9836-20-0280-108	.	HOSE ASSY, hydraulic (No. 2 pump suction) (50599) *(see fig. 123 for reqd)*	REF	6701-6790; 6831-
-45	3305-12	.	COUPLING HALF, quick disconnect female (00624) (Lockheed spec dwg 668430-7) *(see fig. 124 for reqd)*	REF	
-46	330202-6	C.	COUPLING HALF, quick disconnect male (00624) (Lockheed spec dwg 668429-3) *(see fig. 124 for reqd)*	REF	

A - Removed per AA.1F-104S-OT-142A
B - Reqd per AA.1F-104S-OT-142A
C - All parts marked with letter C serve also to install partial incorporation of SPU system
D - Only per partial incorporation of SPU system

Figura e particolare	NDR	1	2	3	4	5	6	7	DENOMINAZIONE	Quant.	Codice applicab.
									POWER PLANT DRAINS		
246	850312-103			.					KIT ASSY, Q.E.C. (pack up) *(see fig. 243 for reqd)*	REF	6701-6790; 6831-
	852777-107			A.					KIT ASSY, Q.E.C. (pack up) *(see fig. 243 for reqd)*	REF	6791-6830
									✲		
-5	98623			.	.				HOSE ASSY, fuel drain (78570) (Lockheed spec dwg 750481-3) (alternate to 102800)	1	
	102800			.	.				HOSE ASSY, fuel drain (96142) (Lockheed spec dwg 750481-3) (alternate to 98623)	REF	
-6	726565-3			.	.				FITTING, engine main combustion drain	1	
									Attaching Parts		
-7	AN502-10-6			.	.				SCREW (88044)	4	
									✲		
-8	750487-3			.	.				GASKET, fuel drain seal	2	
-9	X218-6			.	.				CLAMP, loop type support cushioned (78570)	4	
-10	X218-8			.	.				CLAMP, loop type support cushioned (78570)	2	
									Attaching Parts		
-11	AN520C10R8			.	.				SCREW (88044)	3	
-11A	NAS43HT3-16			.	.				SPACER (80205)	1	
-12	MS21043-3			.	.				NUT (96906)	3	
									✲		
-13	789009-109			.	.				TUBE ASSY, afterburner fuel drain	1	
-14	727847-1			.	.				FITTING, afterburner fuel drain	1	
									Attaching Parts		
-15	AN502-10-6			.	.				SCREW (88044)	4	6701-6790; 6831-
	MS35276-261			A.	.				SCREW (96906)	4	6791-6830
									✲		
-16	AN824-6C			.	.				TEE (88044)	1	6701-6790; 6831-
-17	775107-39			.	.				TUBE ASSY, turbine fuel drain	1	6701-6790; 6831-
-18	AN837-4C			.	.				ELBOW (88044)	1	6701-6790; 6831-
-19	AN924-4C			.	.				NUT (88044)	1	6701-6790; 6831-
-20	LS5041-4			.	.				PACKING, synthetic oil resistant (36659)	1	6701-6790; 6831-
-21	LS7357SST6			.	.				CLAMP (36659)	3	6701-6790; 6831-
-22	LS7357SST7			.	.				CLAMP (36659)	1	6701-6790; 6831-
-23	LS7357SST8			.	.				CLAMP (36659)	1	6701-6790; 6831-
-24	LS7357SST12			.	.				CLAMP (36659)	1	6701-6790; 6831-
									Attaching Parts		
	NAS1096-3-8			.	.				SCREW (80205)	3	6701-6790; 6831-
	MS21042L3			.	.				NUT (96906)	3	6701-6790; 6831-
									✲		
-25	R3805CC4-0370			.	.				HOSE ASSY (00624)	1	6701-6790; 6831-
-25A	MS8000E230A			A.	.				HOSE ASSY (96906)	1	6791-6830
-26	AN784D8			.	.				TEE (88044)	1	
-27	AN893-3D			.	.				BUSHING (88044)	1	
-28	LS5041-15			.	.				PACKING ,synthetic oil resistant (36659)	1	
-29	AN924-4D			.	.				NUT (88044)	1	
-30	AN833-4D			.	.				ELBOW (88044)	1	6701-6790; 6831-
-30A	AN815-4D			A.	.				UNION (88044)	1	6791-6830
-31	601000-4-0112			.	.				HOSE ASSY, medium pressure (No. 2 pump seal drain) (00624) *(see fig. 245 for reqd)*	REF	
-31A	LS7357SST5			A.	.				CLAMP (36659)	6	6791-6830
-31B	LS7357SST7			A.	.				CLAMP (36659)	4	6791-6830
-31C	LS7357SST10			A.	.				CLAMP (36659)	3	6791-6830
-31D	LS7357SST6			A.	.				CLAMP (36659)	1	6791-6830
									Attaching Parts		
-31E	LS9682C8			A.	.				SCREW (36659)	7	6791-6830
-31F	MS21043-3			A.	.				NUT (96906)	7	6791-6830
									✲		
-32	785218-27			.					TUBE ASSY, system No. 2 hydraulic pressure *(see fig. 124 for reqd)*	REF	6701-6790; 6831-
	784267-515			.					PLUMBING INSTL, engine compartment *(see fig. 113 for reqd)*	REF	6701-6815
	784267-107			.					PLUMBING INSTL, engine compartment *(see fig. 113 for reqd)*	REF	6816-

Power Plant

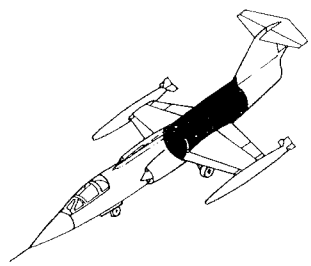

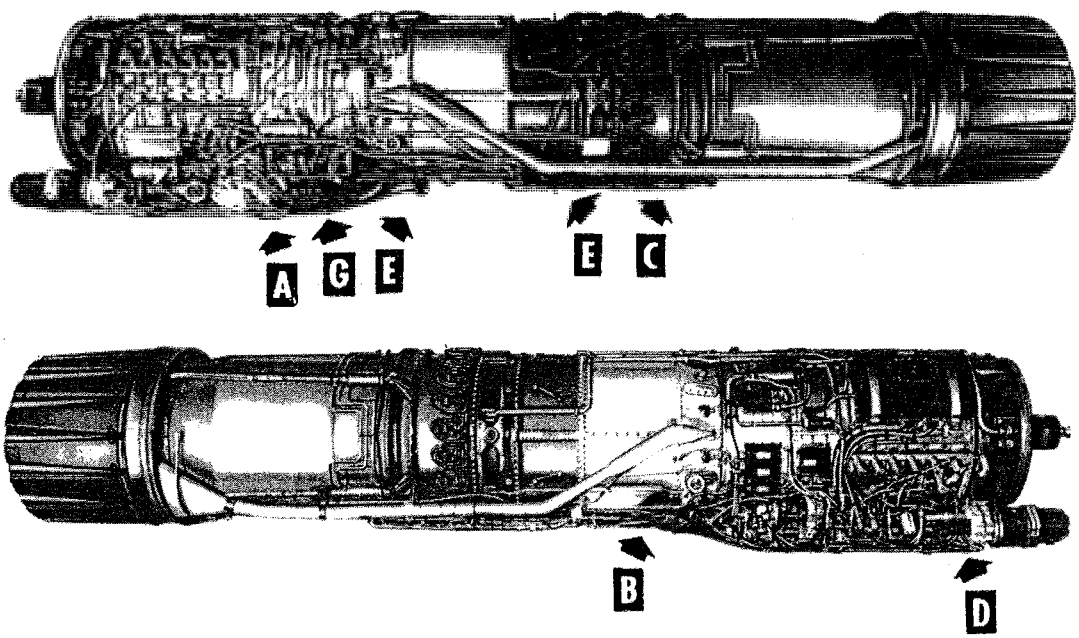

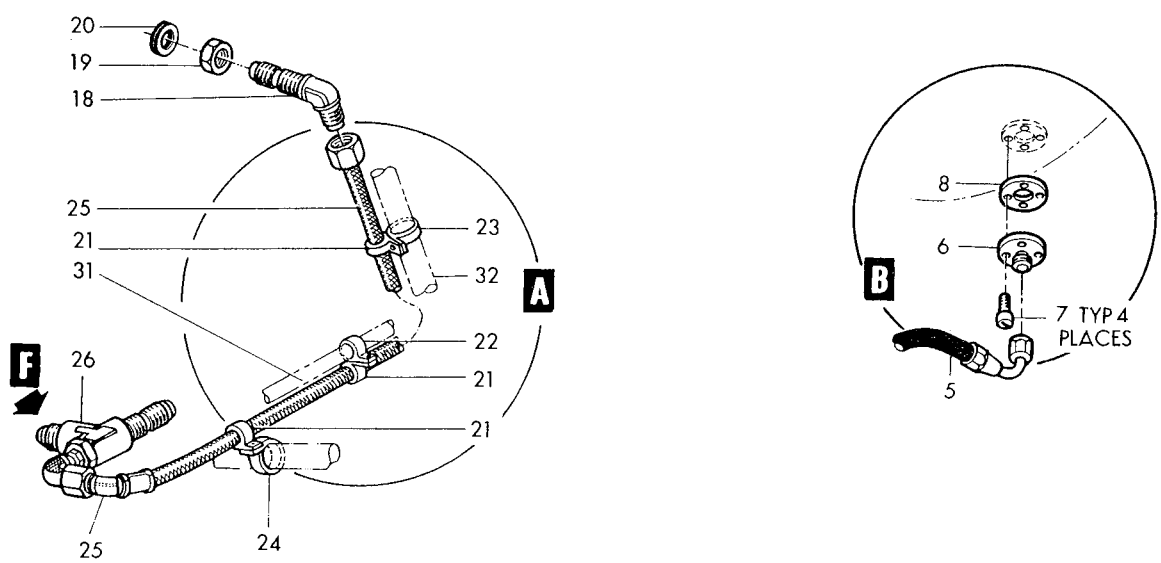

Figure 246-Power Plant Drains (Sheet 1 of 3)

Power Plant

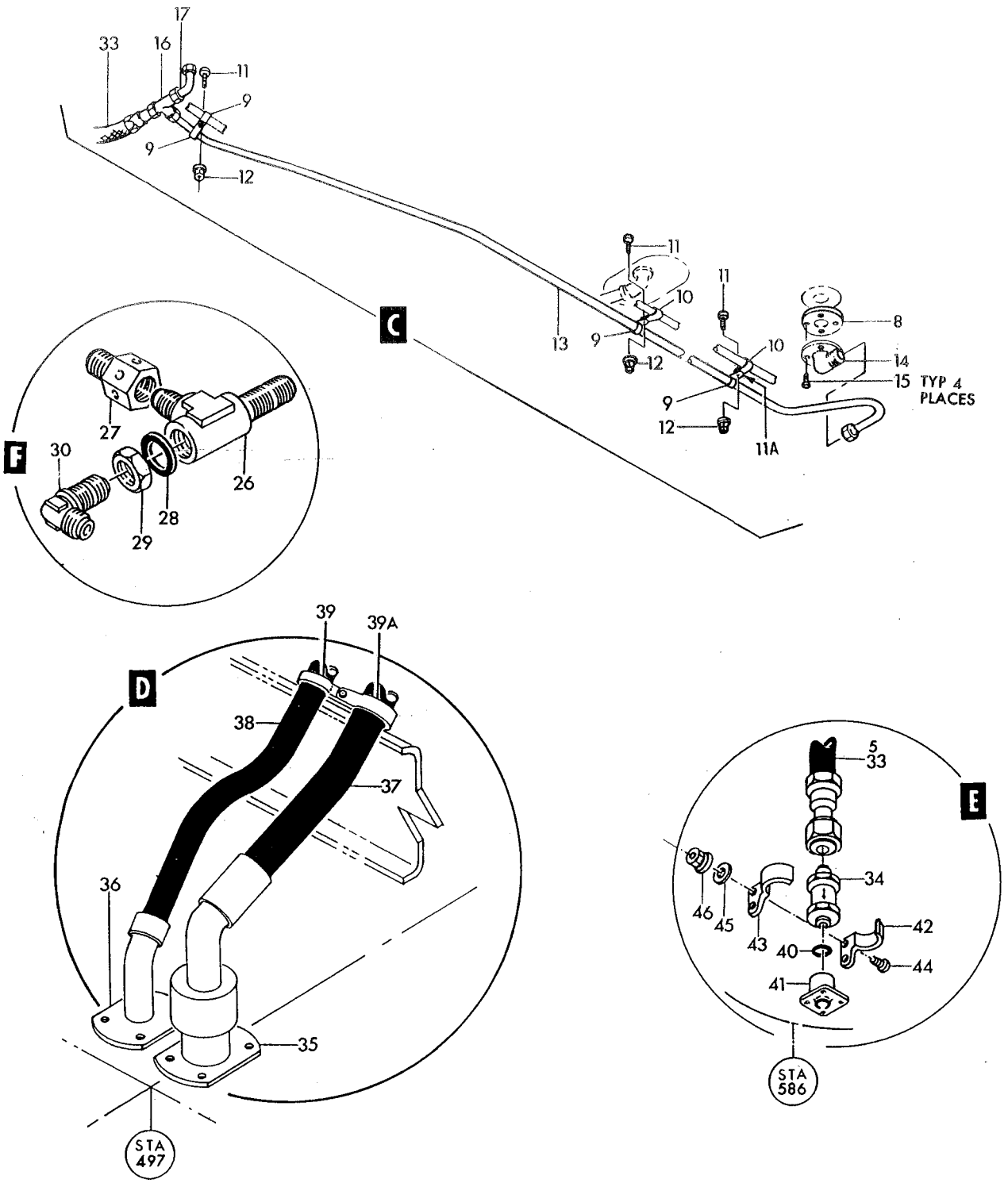

P56-15-821

Figure 246— Power Plant Drains (Sheet 2 of 3)

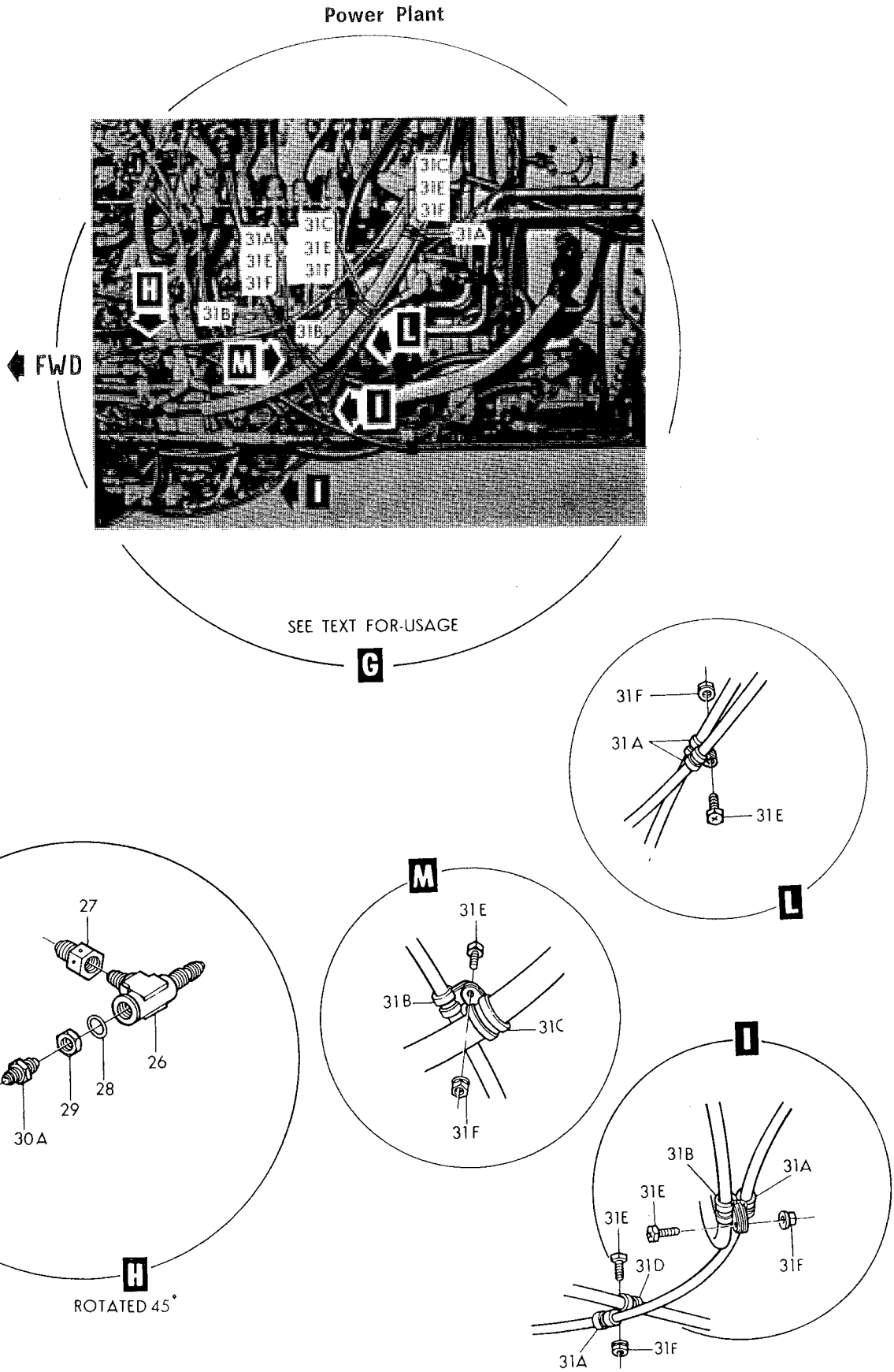

Figure 246-Power Plant Drains (Sheet 3 of 3)

Figura e particolare	NDR	DENOMINAZIONE	Quant.	Codice applicab.
246-33	98619	HOSE ASSY, afterburner and turbine fuel drain (78570) (Lockheed spec dwg 751306-1) (alternate to 800480)	1	
	800480	HOSE ASSY, afterburner and turbine fuel drain (96142) (Lockheed spec dwg 751306-1) (alternate to 98619)	REF	
-34	P7-526	VALVE, automatic fuel drain (91816) (Lockheed spec dwg 634043-1)	2	
-35	726645-4	FITTING, overboard drain	1	
-36	728630-1	FITTING, overboard drain	1	
-37	601002-12D0250	HOSE ASSY, medium pressure (overboard drain fitting) (00624)	1	
-38	090-601054J0300	HOSE ASSY, medium pressure (overboard drain fitting) (00624)	1	
-39	LS7357SST11	CLAMP, synthetic oil and fuel resistant cushioned loop (36659)	1	
-39A	LS7357SST15	CLAMP, synthetic oil and fuel resistant cushioned loop (36659)	1	
		Attaching Parts		
	AN520-10R10	SCREW (88044)	1	
	AN960D10	WASHER (88044)	1	
	MS21042L3	NUT (80205)	1	
		*		
-40	3297-402-6	PACKING, O ring (81400)	2	
	784267-501	FITTING INSTL, engine compartment *(see fig. 42 for reqd)*	REF	
-41	728433-1	FITTING, fuel overboard drain	2	
	764233	CLAMP ASSY, engine drain valve support	2	
-42	764233-3L	CLAMP, engine drain valve support	1	
-43	764233-3R	CLAMP, engine drain valve support	1	
		Attaching Parts		
-44	NAS623-3-5	SCREW (80205)	2	
-45	AN960D10	WASHER (88044)	2	
-46	MS21042L3	NUT (96906)	2	
		*		

A - Only per partial incorporation of SPU system

Figura e particolare	NDR	DENOMINAZIONE	Quant.	Codice applicab.
		17TH STAGE SEAL LEAKAGE AIR DUCTS		
247	784222-7	DUCT INSTL, 17th stage seal leakage air *(see fig. 243 for reqd)*	REF	
	784222-8	DUCT INSTL, 17th stage seal leakage air *(see fig. 243 for reqd)*	REF	
- 1	771978-3	BRACKET ASSY, 17th stage leakage air duct engine	1	
		Attaching Parts		
- 2	MS9034-27	BOLT (96906) (furnished with engine)	4	
	Z1200-048	NUT (72962) (furnished with engine)	4	
		——————☼——————		
- 3	771799-1	HINGE, inboard 17th stage leakage air duct	1	
- 4	771978-5	PIN, inboard 17th stage leakage air duct	1	
- 5	771800-1	HINGE, outboard 17th stage leakage air duct	1	
- 6	771978-7	PIN, outboard 17th stage leakage air duct	1	
- 7	771801-1	CLAMP ASSY, 17th stage leakage air duct	1	
- 8	NAS1003-22A	BOLT (80205)	1	
	AN363C1032	NUT (88044)	1	
- 9	778994-1	ELBOW, 17th stage leakage air duct LH	1	
	778994-2	ELBOW, 17th stage leakage air duct RH	1	
		Attaching Parts		
-10	NAS1004-3	BOLT (80205)	8	
-11	MS21043-4	NUT (96906)	8	
		——————☼——————		
-12	AN501AC10-10	SCREW (88044)	1	
-13	AN960C10L	WASHER (88044)	2	
-14	778998-1	SPACER, 17th stage leakage air duct	1	
-15	MS20500-1032	NUT (96906)	1	
-16	780742-1	DUCT ASSY, 17th stage leakage air seal LH	1	
	780742-2	DUCT ASSY, 17th stage leakage air seal RH	1	
-17	782553-1	BRACKET, 17th stage seal leakage duct LH	1	
	782553-2	BRACKET, 17th stage seal leakage duct RH	1	
		Attaching Parts		
-18	MS9035-14	BOLT (96906) (furnished with engine)	3	
-19	MS9035-16	BOLT (96906)	2	
-20	AN960C516	WASHER (88044)	2	
-21	AN960C516L	WASHER (88044)	2	
	Z1200-054	NUT (72962) (furnished with engine)	3	
		——————☼——————		
-22	782554-1	DUCT ASSY, 17th stage seal leakage LH	1	
	782554-2	DUCT ASSY, 17th stage seal leakage RH	1	
		Attaching Parts		
-23	AN520C10R8	SCREW (88044)	3	
-24	AN960C10L	WASHER (88044)	6	
-25	MS21042L3	NUT (96906)	3	

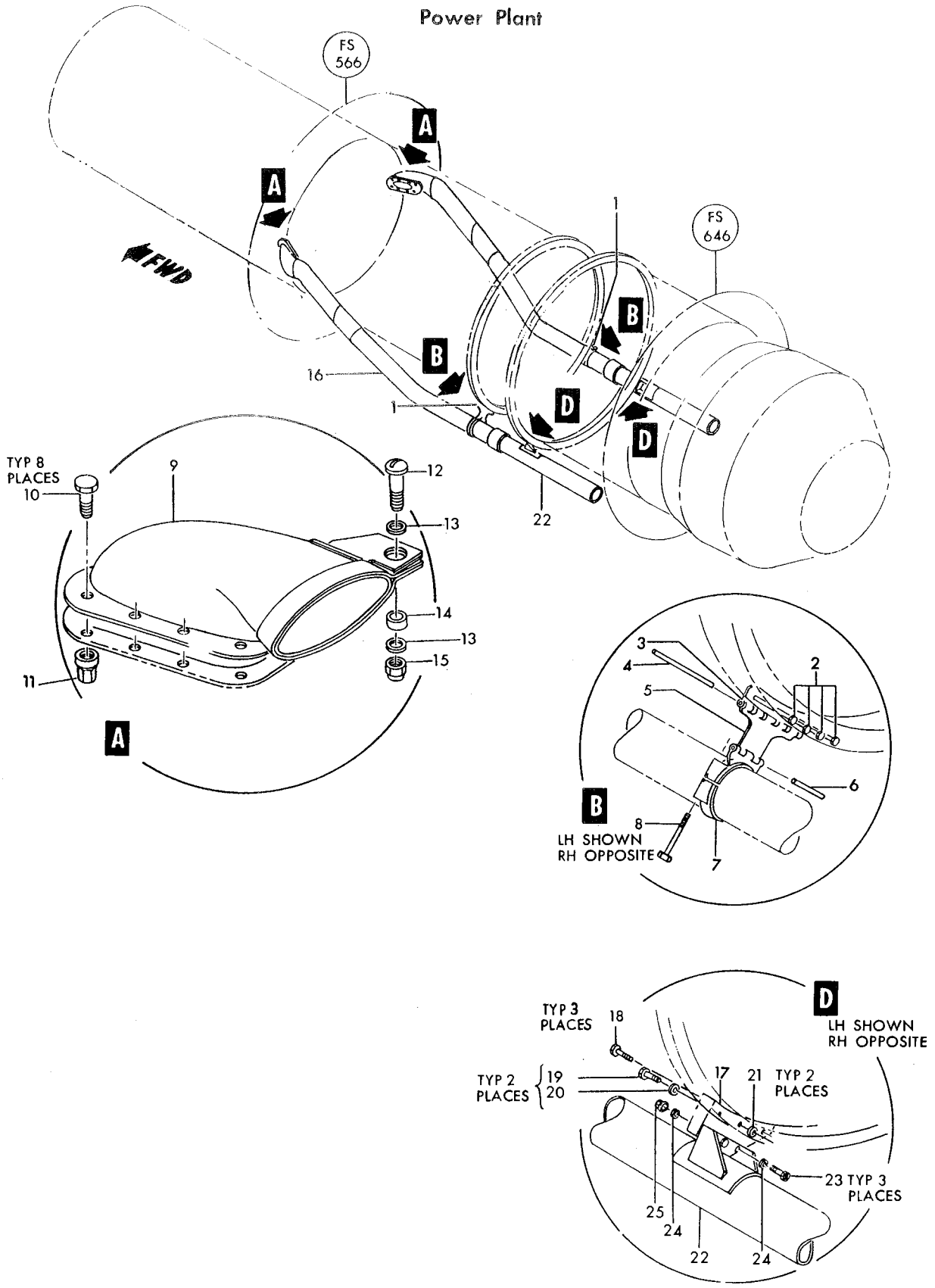

Figure 247—17th Stage Seal Leakage Air Ducts

Figura e particolare	NDR	DENOMINAZIONE 1 2 3 4 5 6 7	Quant.	Codice applicab.
		ENGINE OIL TANK DIPSTICK AND NUCLEONIC OIL QUANTITY DETECTOR		
248	777220-1	. DOOR INSTL, dipstick access (fus sta 527 to 533) *(see fig. 31 for reqd)* .	REF	
- 1	777219-503	. . DOOR ASSY, dipstick access *(see fig. 59)*	1	
		Attaching Parts		
- 2	NAS517-3-2	. . SCREW (80205)	3	
		——————☼——————		
	777219-17	. . . DOOR ASSY, dipstick access	1	
- 3	777222-3	. . . . HALF HINGE, dipstick access door	1	
- 4	4002-4	. . . STUD, camloc (71286)	3	
- 5	4002G	. . . GROMMET, camloc (71286)	3	
- 6	R4G	. . . RING, camloc (71286)	3	
- 7	777219-11	. . . PIN, dipstick access door hinge	1	
- 8	777222-1	. . . HALF HINGE, dipstick access door	1	
	783457-1	. . . INDICATOR ASSY, engine oil tank dipstick	1	
- 9	783457-3	. . . . INDICATOR, engine oil tank dipstick	1	
-10	777224-3	. . . . HALF HINGE, dipstick indicator	1	
-11	777220-5	. . FITTING ASSY, dipstick	1	
-12	783438-1	. . . NUT, dipstick fitting	1	
-13	777217-3	. . . CUP, dipstick fitting	1	
		Attaching Parts		
	NAS1096-3-8	. . . SCREW (80205)	3	
		——————☼——————		
-14	783437-1	. . . CHANNEL ASSY, dipstick fitting	1	
	777215-7	. DIPSTICK INSTL, engine oil tank *(see fig. 243 for reqd)*	REF	
-15	783439-1	. . DIPSTIK ASSY, engine oil tank	1	
-16	NAS509-4	. . . NUT (80205)	1	
	784759-1	. . . TERMINAL, engine oil tank dipstick	2	
	783439-3	. . . HANDLE ASSY, engine oil tank	1	
-17	NAS561P2-8	. . . . PIN (80205)	1	
-18	783435-1	. . . . SCREW, engine oil tank dipstick	1	
-19	783436-1	. . . . HANDLE, engine oil tank dipstick	1	
-20	783439-7	. . . FLANGE, engine oil tank dipstick	1	
-21	AN924-8C	. . NUT (88044)	1	
-22	LS5041-6	. . PACKING, synthetic oil resistant (36659)	1	
-23	728269-1	. . FITTING, engine oil tank dipstick	1	
-24	601915-6D0084	. . HOSE ASSY, medium pressure (00624) (Lockheed spec dwg 740016-1)	1	
	777215-9	. FITTING INSTL, engine oil tank dipstick *(see fig. 243 for reqd)*	REF	
-25	728078-3	. . FITTING, engine oil tank dipstick	1	
-26	LS5041-5	. . PACKING, synthetic oil resistant (36659)	1	
-27	1000-00-300-1	. RADIATION SOURCE, nucleonic oil quantity indicating system (24494) (Lockheed spec dwg 740287-101) *(see fig. 243 for reqd)*	REF	6701-6740
-28	1000-00-200-1	. BRIDLE ASSY, nucleonic oil quantity indicating system (24494) (Lockheed spec dwg 740288-101) *(see fig. 243 for reqd)*	REF	6701-6740
-29	1000-00-400	. DETECTOR, nucleonic oil quantity indicating system (24494) (Lockheed spec dwg 740350-101) *(see fig. 243 for reqd)*	REF	6701-6740
-30	849007-103	. BRACKET, nucleonic oil quantity indicating system electrical recp *(see fig. 243 for reqd)*	REF	6701-6740
-31	851478-101	. SHIELD, radiation detector *(see fig. 243 for reqd)*	REF	6701-6740

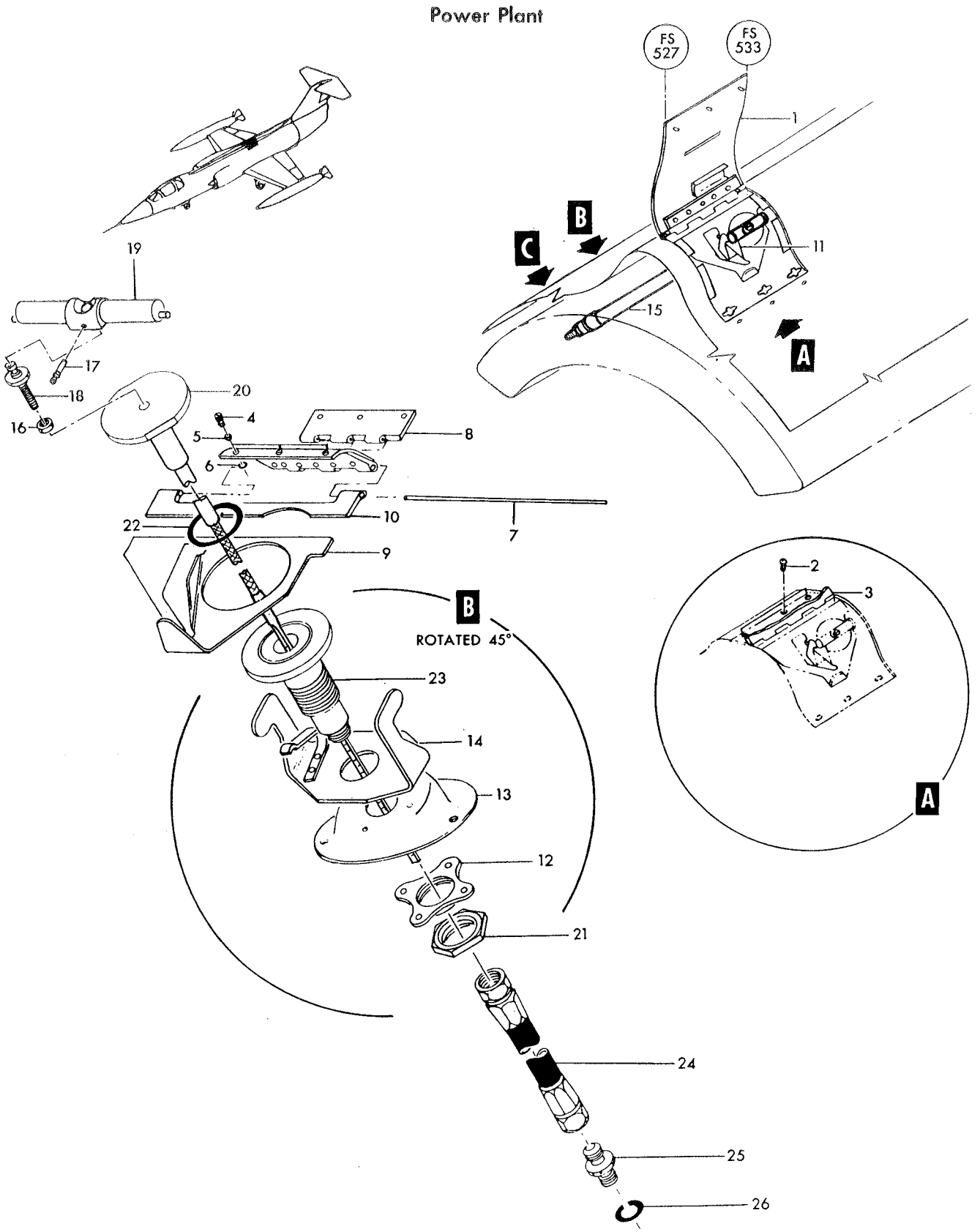

Figure 248—Engine Oil Tank Dipstick and Nucleonic Oil Quantity Detector (Sheet 1 of 2)

Power Plant

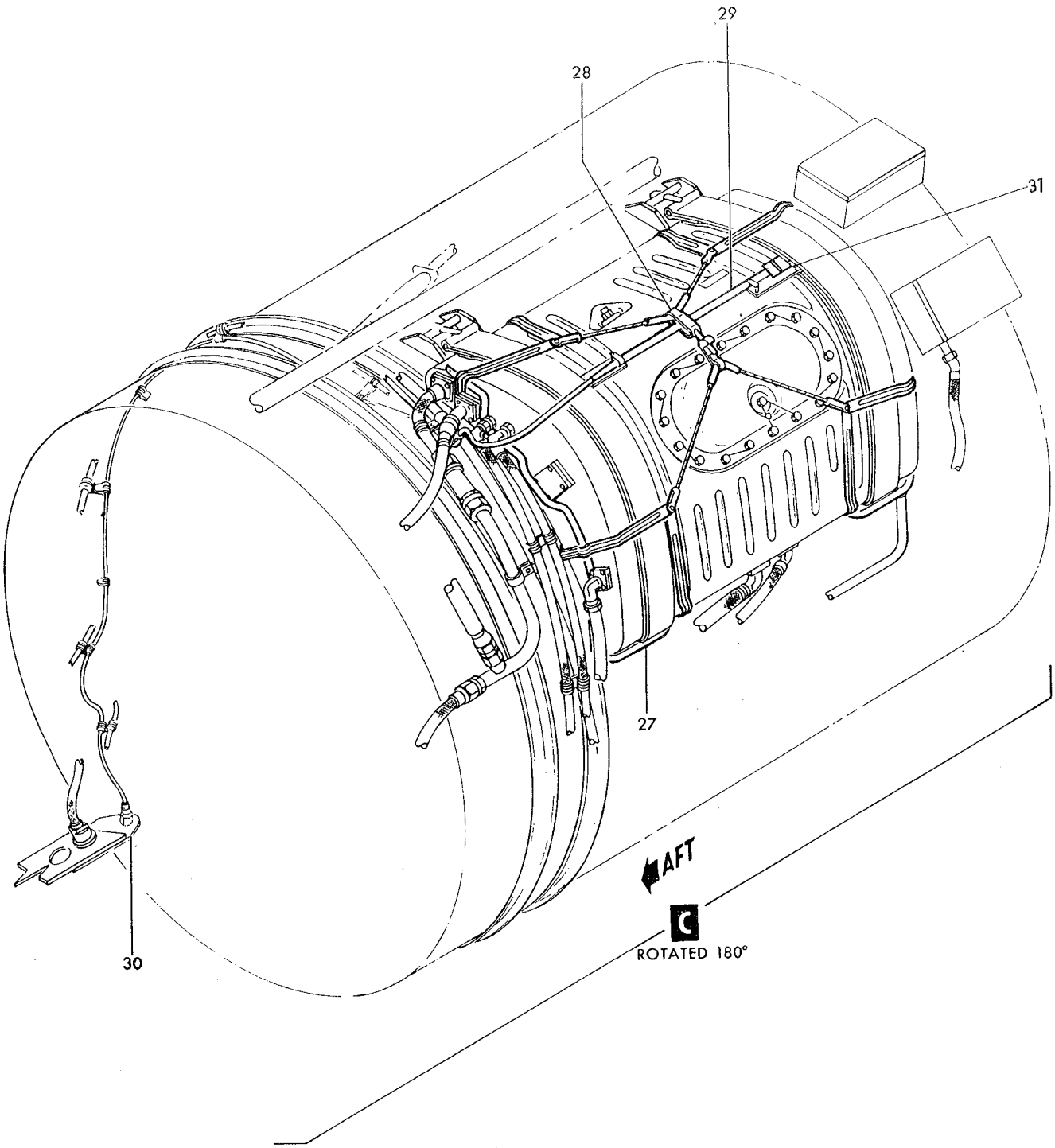

Figure 248—Engine Oil Tank Dipstick and Nucleonic Oil Quantity Detector (Sheet 2 of 2)

Figura e particolare	NDR	1 2 3 4 5 6 7 DENOMINAZIONE	Quant.	Codice applicab.
		ENGINE OIL TRANSMITTER AND TRANSDUCER		
249	851107-101	. TRANSMITTER INSTL, engine oil *(see fig. 31 for reqd)*	REF	6701-6765
	785829-107	. TRANSMITTER INSTL, engine oil *(see fig. 31 for reqd)*	REF	6766-6790; 6831-
	785829-5	. . TRANSDUCER ASSY, engine oil	1	6766-6790; 6831
- 1	42005-2	. . . SWITCH (E26) engine oil pressure (98505) (09049) (Lockheed spec dwg 634175-5)	1	6766-6790; 6831-
		Attaching Parts		
	NAS623-3-2	. . . SCREW (80205)	2	6766-6790; 6831-
- 2	AN924-4C	. . . NUT (88044)	2	6766-6790; 6831-
- 3	AN833-4C	. . . ELBOW (88044)	1	6766-6790; 6831-
- 4	AN837-4C	. . . ELBOW (88044)	1	6766-6790; 6831-
- 5	LS5041-4	. . . PACKING, synthetic oil resistant (36659)	2	6766-6790; 6831-
	785829-103	. . TRANSMITTER ASSY, engine oil	1	6701-6765
	785829-109	. . TRANSMITTER ASSY, engine oil	1	6766-6790; 6831-
- 6	7724-30C5-1	. . . TRANSMITTER, (TR2) oil pressure (02987) (Lockheed spec dwg 620732-101) (see T.O. 5P5-3-32-14)	1	6701-6790; 6831-
- 7	AN815-4C	. . . UNION (88044)	2	6701-6765
- 7A	AN815-4C	. . . UNION (88044)	1	6766-6790; 6831-
- 7B	AN833-4C	B. . . ELBOW (88044)	1	6701-6790; 6831-
- 7C	AN924-4C	B. . . NUT (88044)	1	6701-6790; 6831-
- 8	LS5041-4	. . . PACKING, synthetic oil resistant (36659)	2	6701-6790; 6831-
- 9	797067-1	. . NUT, jam (drilled)	1	6701-6790; 6831-
-10	781289-1	. . BRACKET	1	6701-6790; 6831-
-11	TA4C74S6T	. . CLAMP, loop type support cushioned (84971)	1	6766-6790; 6831-
-12	TA4C74S4T	. . CLAMP, loop type support cushioned (84971)	1	6766-6790; 6831-
		Attaching Parts		
-13	AN520-10R8	. . SCREW (88044)	1	6766-6790; 6831-
	MS21042L3	. . NUT (96906)	1	6766-6790; 6831-
-14	779274-45	. . TUBE ASSY, engine oil pressure vent	1	6766-6790; 6831-
-15	726495-3	. . FITTING, overboard drain	1	6766-6790; 6831-
-16	R3806CC4-0250	. HOSE ASSY, engine hydraulic pressure (50599) *(see fig. 245 for reqd)*	REF	6741-
-17	LS7358SST5	. CLAMP, cushioned synthetic oil and fuel resistant loop (36659) *(see fig. 245 for reqd)*	REF	6741-
	849867-101	. HARNESS ASSY, fus sta 490 firewall connector *(see fig. 194 for reqd)*	REF	6741-
-18	CA3106K10SL4S	. . CONNECTOR, (P112) plug (engine oil lever transducer) (71468)	1	6741-
	MS3057-4A	. . ADAPTER (96906)	1	6741-
-19	R3826CC4-0132-0	. HOSE ASSY, oil pressure transmitter (50599) *(see fig. 245 for reqd)*	REF	6701-6790; 6831-
-19A	MS8000E484A	C. HOSE ASSY, oil pressure transmitter (96906) *(see fig. 245 for reqd)*	REF	6791-6830
	849542-101	. HARNESS ASSY, oil pressure transmitter *(see fig. 194 for reqd)*	REF	6701-6790; 6831-
	852299-101	. HARNESS ASSY, P-312 to oil press XMTR and hyd gen s/o valve *(see fig. 192 for reqd)*	REF	6791-6830
-20	MS3106K14S2S	. . CONNECTOR, (P139) plug (oil pressure transmitter) (96906)	1	
	MS3057-6A	. . ADAPTER (96906)	1	
	852770-101	C. STARTER POWER UNIT INSTL	1	6791-6830
-21	726495-3	C. . FITTING, over board drain	2	6791-6830
-22	AN929-4	C. . CAP ASSY (88044)	2	6791-6830
	852807-101	C. TRANSMITTER INSTL, engine oil *(see fig. 31 for reqd)*	REF	6791-6830
-23	7724-30C5-1	C. . TRANSMITTER, (TR2) oil pressure (02987) (Lockheed spec dwg 620732-101) (see T.O. 5P5-3-32-14)	1	6791-6830
-24	AN833-4S	C. . ELBOW (88044)	1	6791-6830
-25	AN837-4S	C. . ELBOW (88044)	1	6791-6830
-26	AN924-4S	C. . NUT (8844)	2	6791-6830
-27	NAS1595-4	C. . PACKING (80205)	2	6791-6830
-28	852806-101	C. . BRACKET ASSY	1	6791-6830
	852313-101	C. TRANSDUCER INSTL, engine oil *(see fig. 31 for reqd)*	REF	6791-6830
	852313-103	C. . TRANSDUCER ASSY, engine oil	1	6791-6830
-29	AN833-4C	C. . . ELBOW (88044)	1	6791-6830
-30	AN837-4C	C. . . ELBOW (88044)	1	6791-6830

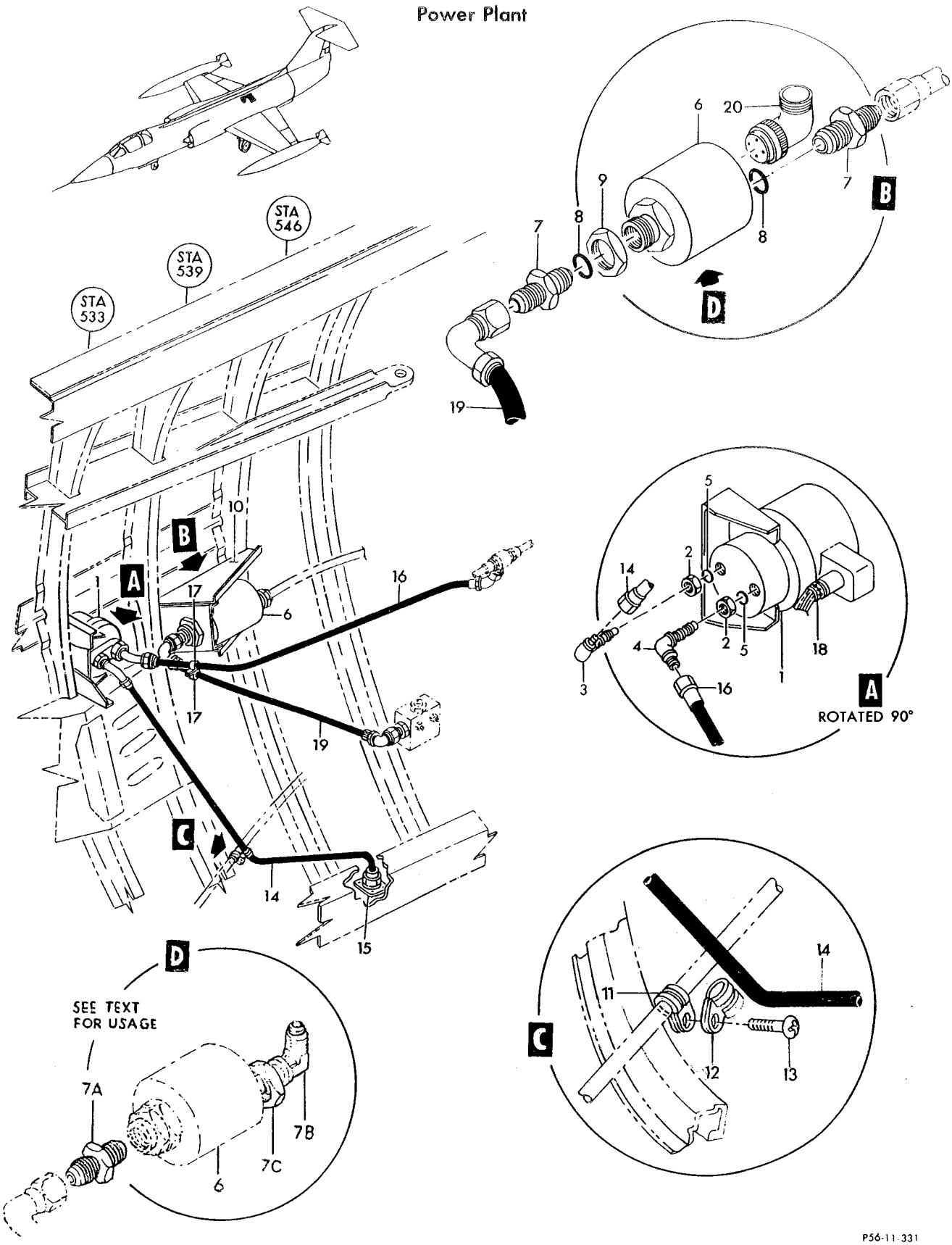

Figure 249—Engine Oil Transmitter and Transducer (Sheet 1 of 2)

Power Plant

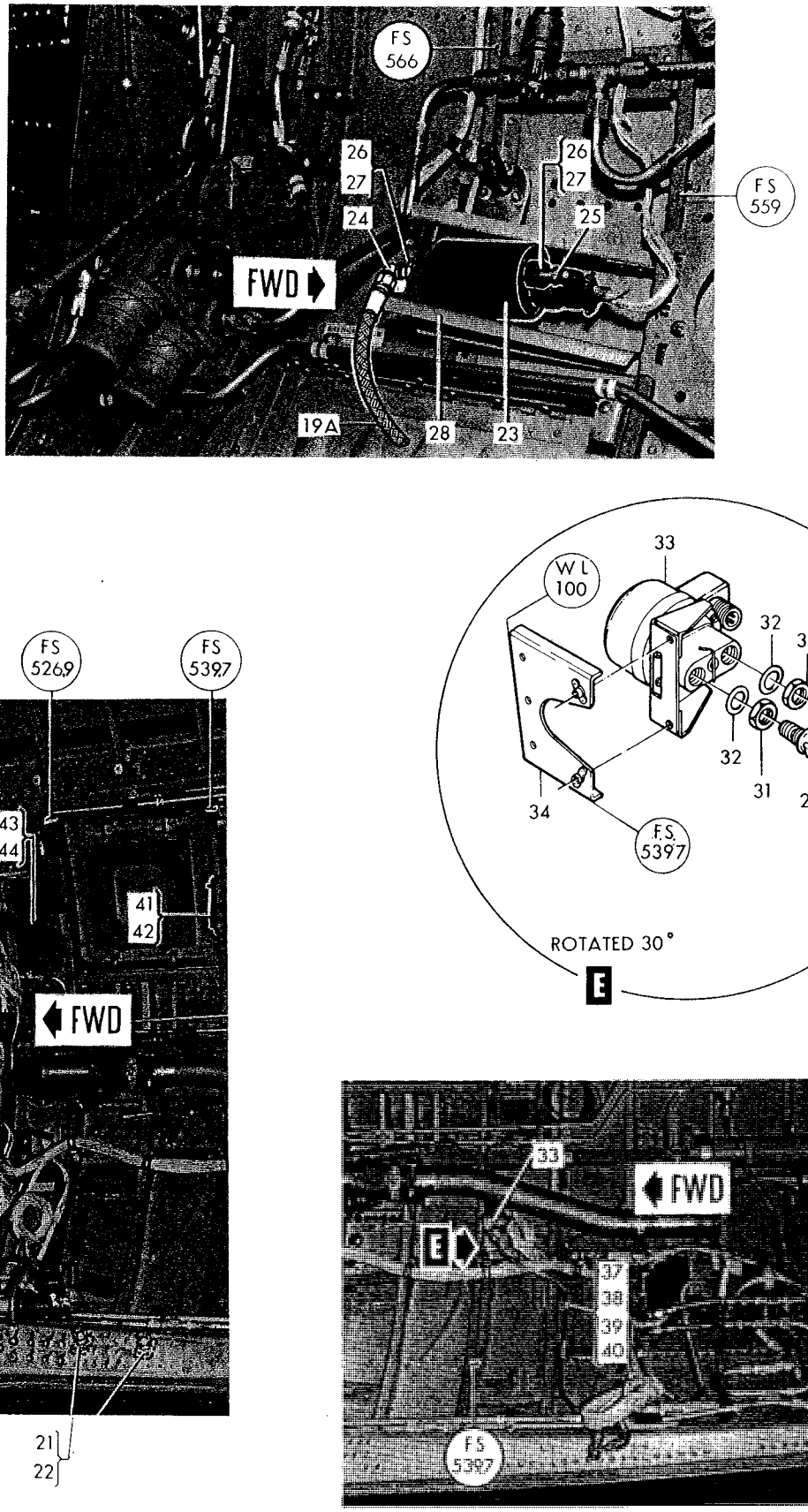

Figure 249-Engine Oil Transmitter and Transducer (Sheet 2 of 2)

Figura e particolare	NDR	1 2 3 4 5 6 7 DENOMINAZIONE	Quant.	Codice applicab.
			2	6791-6830
249-31	AN924-4C	C. . . NUT (88044)	2	6791-6830
-32	NAS1595-4	C. . . PACKING (80205)		
-33	42005-2	C. . SWITCH, (E26) engine oil pressure (98505) (09049) (Lockheed spec dwg 634175-5)	1	6791-6830
		Attaching Parts		
	NAS623-3-2	C. . SCREW (80205)	2	6791-6830
		*		
			1	6791-6830
-34	852312-101	C. . SUPPORT ASSY, transducer	1	6791-6830
-35	779274-135	C. . TUBE ASSY, engine oil pressure vent	1	6791-6830
-36	726495-3	C. . FITTING, overboard drain	1	6791-6830
-37	TA4C74S4T	C. . CLAMP, loop type support cushioned (84971)		
		Attaching Parts		
-38	NAS603-16P	C. . SCREW (80205)	1	6791-6830
-39	NAS43DD3-32	C. . SPACER (80205)	1	6791-6830
-40	MS21042L3	C. . NUT (96906)	1	6791-6830
		*		
	851958-103	C. DUCT INSTL, exhaust	1	6791-6830
-41	852682-101	C. . BRACKET, exhaust duct gimbal support	1	6791-6830
-42	NAS43HT3-38	C. . SPACER (80205)	2	6791-6830
-43	852772-101	C. . ANGLE, fus sta 520 to 526	1	6791-6830
-44	852773-101	C. . INTERCOSTAL, fus sta 520 to 526	1	6791-6830

B - Reqd per AA.1F-104S-OT161
C - Only per partial incorporation of SPU system

Figura e particolare	NDR	1 2 3 4 5 6 7 DENOMINAZIONE	Quant.	Codice applicab.
		ENGINE OIL TANK HAND PUMP		
250	776085-103	. PUMP INSTL, engine oil tank hand *(see fig. 243 for reqd)*	REF	
- 1	776084-1	. . BRACKET ASSY, pump	1	
		Attaching Parts		
- 2	NAS1004-2	. . BOLT (80205)	4	
- 3	AN960C416L	. . WASHER (88044)	4	
- 4	MS21043-4	. . NUT (96906)	4	
- 5	776080-1	. . . NAMEPLATE, engine oil tank fill	1	
- 6	314545	. . PUMP, hydraulic hand (A0809) (00502) (Lockheed spec dwg 634210-1) (1012221-2 is an alternate) (see T.O. 9H4-4-5-23)	1	
	1012221-2	. . PUMP, hydraulic hand (77068) (Lockheed spec dwg 634210-1) (alternate for 314545) (see CR9-104-905-3)	REF	
		Attaching Parts		
- 7	AN4-26A	. . BOLT (88044)	2	
- 8	AN960D416	. . WASHER (88044)	2	
- 9	AC1914-6	. . FILTER ASSY, engine oil tank pump (A0303) (01414) (Lockheed spec dwg 634211-1) (alternate for 62445) (see T.O. 9H3-3-44-3)	1	
	62445	. . FILTER ASSY, engine oil tank pump (81321) (Lockheed spec dwg 634211-1) (alternate to AC1914-6) (see T.O. 7J2-17-3)	REF	
-10	727922-1	. . FITTING, 90 degree elbow	1	
-11	AN832-6D	. . UNION (88044)	1	
-12	LS5041-5	. . PACKING, synthetic oil resistant (36659)	3	
-13	AN924-6D	. . NUT (88044)	2	
-14	NAS551-8D	. . BOLT (80205)	1	
-15	NAS552-8D	. . ELBOW (80205)	1	
-16	LS5041-28	. . PACKING, synthetic oil resistant (36659)	1	
-17	LS5041-15	. . PACKING, synthetic oil resistant (36659)	1	
-18	CR3800-8-0240	. . HOSE ASSY, medium pressure (oil fill) (50599) (CR3800-8-0254 is preferred spare)	1	
	CR3800-8-0254	. . HOSE ASSY, medium pressure (oil fill) (50599) (preferred spare for CR3800-8-0240)	REF	
-19	727683-3	. . UNION, reducer flared tube 1/2 to 3/8 inch	1	
-20	AN924-8	. . NUT (88044)	1	
-21	850815-101	. . BRACKET, oil tank	1	
-22	AN960D416	. . WASHER (88044)	2	
-23	R3806-6-0110	. . HOSE ASSY, medium pressure (oil overflow) (50599)	1	

Power Plant

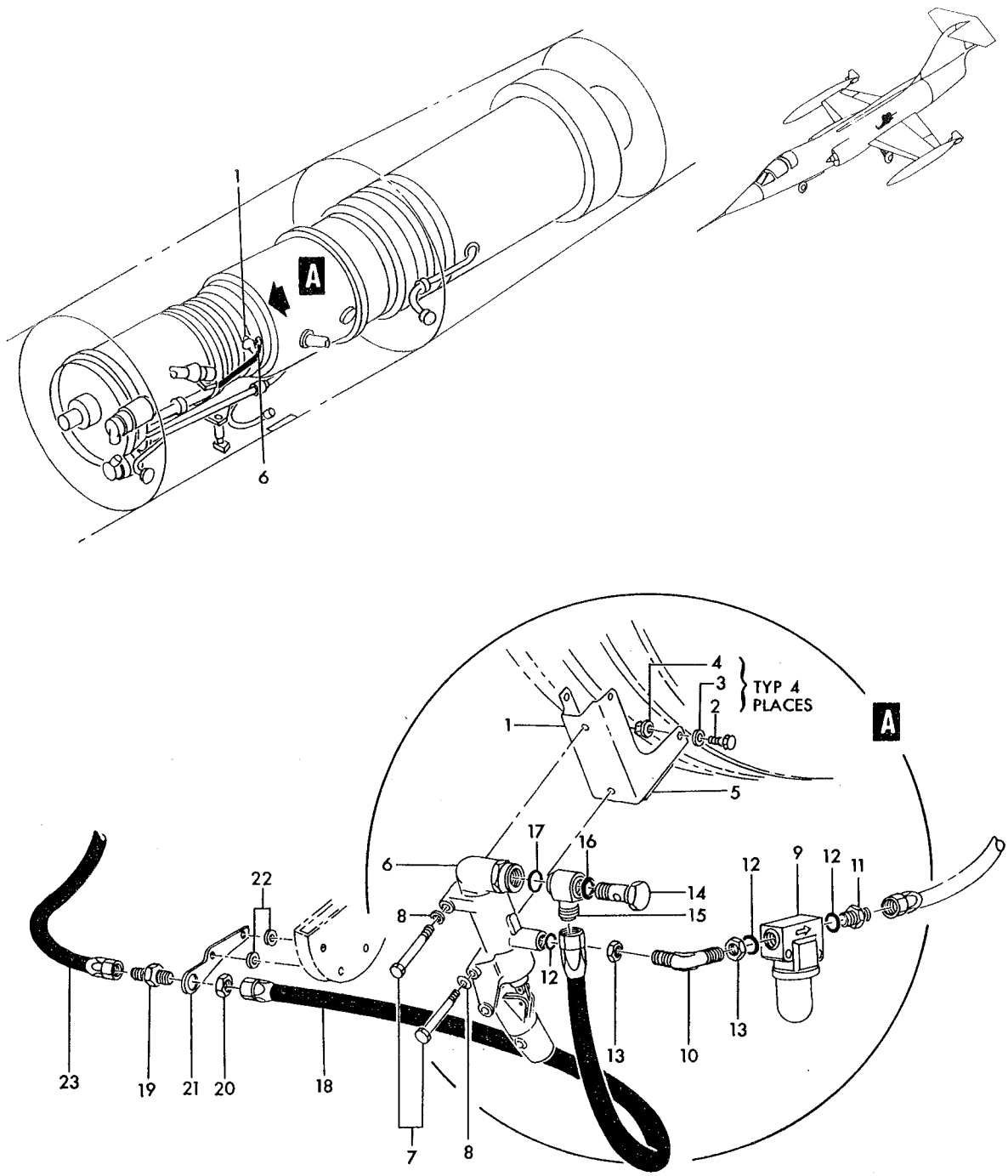

Figure 250 – Engine Oil Tank Hand Pump

Figura e particolare	NDR	DENOMINAZIONE 1 2 3 4 5 6 7	Quant.	Codice applicab.
		POWER PLANT MOUNTS		
251	786600-105	BULKHEAD ASSY, forward section fus sta 614 (LH) *(see fig. 42 for reqd)*	REF	
	760933-3	FITTING INSTL, side thrust engine mount	1	
-1	761563	FITTING, engine mount upper rear	1	
		Attaching Parts		
-2	ALPPHT8-6	LOCKBOLT, pull type (29666)	10	
-3	ACT509HT8-8	LOCKBOLT, pull type (29666)	4	
-4	ACT509HT8-7	LOCKBOLT, pull type (29666)	2	
-5	ACT509HT8-9	LOCKBOLT, pull type (29666)	2	
-6	ALPPHT6-6	LOCKBOLT, pull type (29666)	2	
-7	NAS1204-10	SCREW (80205)	4	
	LCR8	COLLAR, tension (29666)	18	
	LCR6	COLLAR, tension (29666)	2	
	AN960-416	WASHER (88044)	4	
	MS21042L4	NUT (96906)	4	
	785010-101	FITTING INSTL, upper aft side load engine mount (NHA 849071-101)	1	
-8	785010-103	FITTING ASSY, engine upper aft side load mount	1	
-9	785008-1	WEDGE, engine upper aft side load mount	1	
-10	785009-1	FITTING, engine upper aft side load mount	1	
-11	785007-1	BLOCK, engine upper aft side load mount	1	
-12	785007-2	BLOCK, engine upper aft side load mount	1	
-14	NAS428H5-20	BOLT (80205)	2	
-15	NAS428H4-6	BOLT (80205)	1	
-16	AN960-516	WASHER (88044)	2	
-17	NAS509-4	NUT (80205)	1	
-18	780171-1	HANGER ASSY, front engine mount *(see fig. 243 for reqd)*	REF	
		Attaching Parts		
-19	AN7H7A	BOLT (88044)	4	
-20	MS20002-7	WASHER (96906)	4	
-21	761690	BRACKET, front engine mount	1	
-22	761691	FORK, front engine mount	1	
-23	NAS1110-26D	BOLT (80205)	2	
-24	MS20002-10	WASHER (96906)	8	
-25	AN320-10	NUT (88044)	2	
	MS24665-355	COTTER PIN (96906)	2	
-26	780170-1	TRUNNION, front engine mount	1	
-27	780169-1	ROLLER, front engine mount	2	
-28	MS16624-1062	RING (96906)	2	
	763297	ADAPTER INSTL, engine forward face *(see fig. 243 for reqd)*	REF	
-29	763297-3	ADAPTER ASSY, engine forward face	1	
-30	763297-4	RING, adapter	2	
-31	420-75-3175SH	CLAMP, standard T bolt (98625)	1	
-32	AN507-1032R8	SCREW (88044)	18	
	760932L	MOUNT INSTL, fus sta 614 bulkhead forward thrust engine *(see fig. 31 for reqd)*	REF	
	760932R	MOUNT INSTL, fus sta 614 bulkhead forward thrust engine *(see fig. 31 for reqd)*	REF	
-33	760932-4	SHIM, forward thrust engine mount	1	
-34	760932-5	SHIM, forward thrust engine mount	1	
	760932-101	LEAF INSTL, forward thrust engine mount *(see fig. 243 for reqd)*	REF	
	760932-102	LEAF INSTL, forward thrust engine mount *(see fig. 243 for reqd)*	REF	
-35	761461L	LEAF, main engine mount outboard	1	
	761461R	LEAF, main engine mount outboard	1	
-36	761460-101	LEAF, main engine mount inboard	1	
-37	NAS1108-22D	BOLT (80205)	2	
-38	AN960-816L	WASHER (88044)	2	
-39	AN320-8	NUT (88044)	2	
-40	726023	EYEBOLT, main engine mount inboard	1	
-41	NAS1107-14D	BOLT (80205)	1	
-42	NAS1107-20D	BOLT (80205)	1	

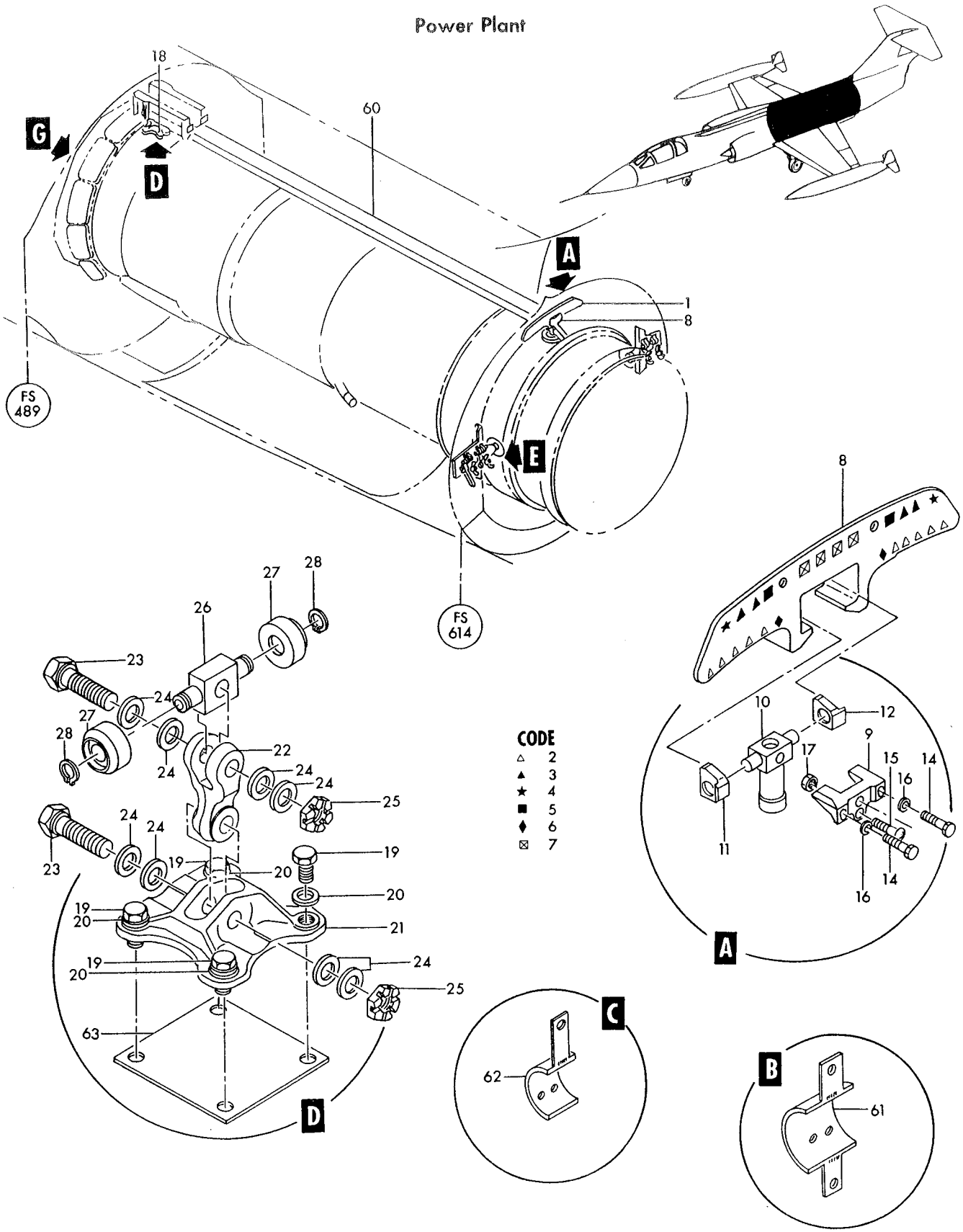

Figure 251— Power Plant Mounts (Sheet 1 of 2)

Power Plant

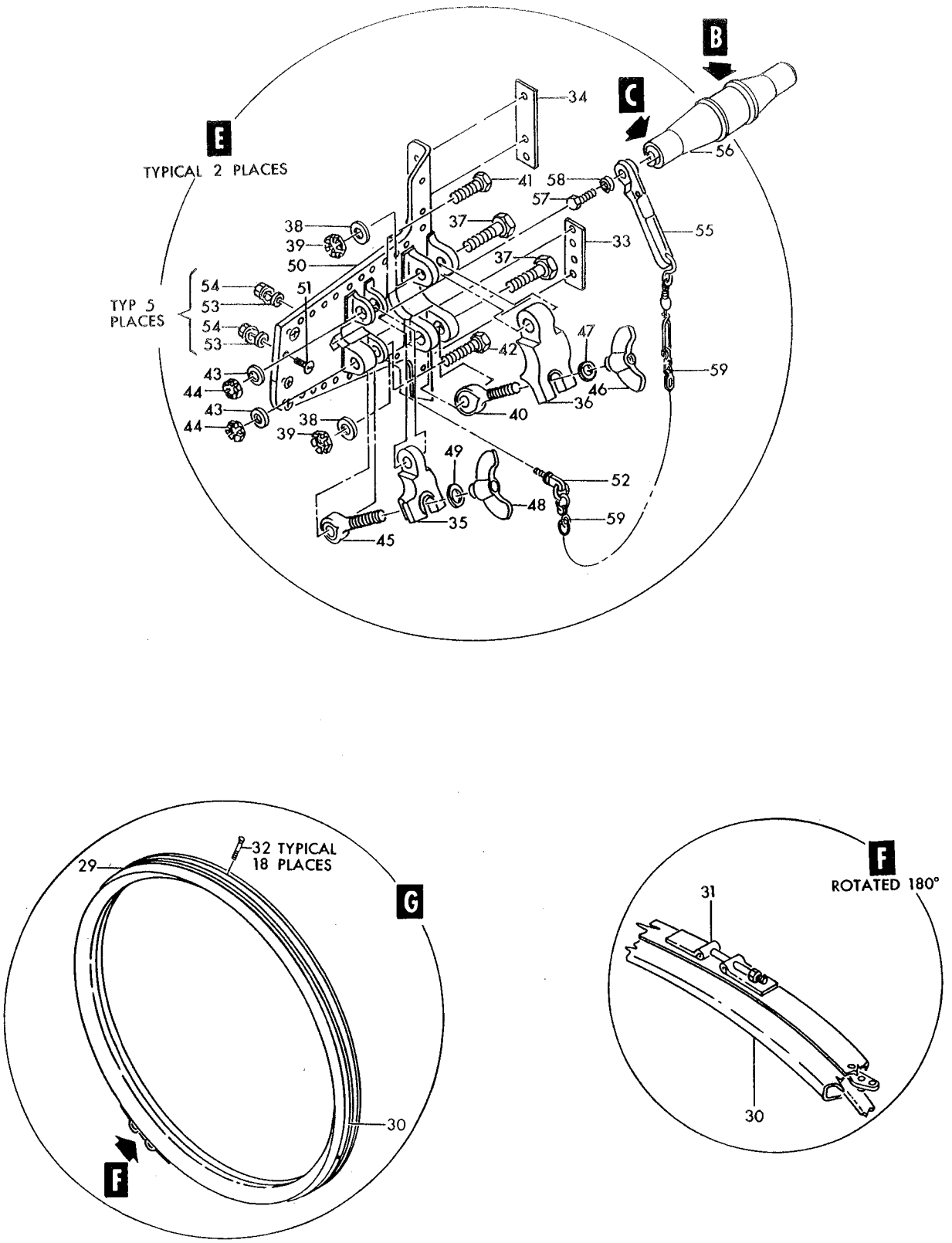

Figure 251— Power Plant Mounts (Sheet 2 of 2)

Figura e particolare	NDR	DENOMINAZIONE	Quant.	Codice applicab.
251-43	AN960-716L	WASHER (88044)	2	
-44	AN320-7	NUT (88044)	2	
-45	726024	EYEBOLT, main engine mount outboard	1	
-46	726025-4	WING NUT, main engine mount	1	
-47	726026	WASHER, main engine mount inboard	1	
-48	726025-3	WING NUT, main engine mount	1	
-49	726027	WASHER, outboard main engine mount spherical	1	
	760932-501	FITTING INSTL, fus sta 614 bulkhead engine mount (LH) *(see fig. 58 for reqd)*	REF	
	760932-502	FITTING INSTL, fus sta 614 bulkhead engine mount (RH) *(see fig. 58 for reqd)*	REF	
-50	776722-1	FITTING, engine side mount LH	1	
	776722-2	FITTING, engine side mount RH	1	
-51	NAS517-3-4	SCREW (80205)	4	
-52	AN42B5A	EYEBOLT (88044)	1	
-53	AN960-10	WASHER (88044)	5	
-54	MS21042L3	NUT (96906)	5	
	850710-101	SHAFT AND HANDLE ASSY, main engine mount (LH) *(see fig. 243 for reqd)*	REF	
	850710-102	SHAFT AND HANDLE ASSY, main engine mount (RH) *(see fig. 243 for reqd)*	REF	
-55	761569L	HANDLE, main engine mount LH	1	
	761569R	HANDLE, main engine mount RH	1	
-56	850709-101	SHAFT, main engine mount	1	
-57	AN4H6A	BOLT (88044)	1	
-58	AN960-416L	WASHER (88044)	1	
-59	RS106-120	CHAIN, main engine mount (86831)	1	
-60	775057-7	TRACK, engine guide rail *(see fig. 252 for reqd)*	REF	
	780045-101	SHIM INSTL, engine mount (LH) *(see fig. 243 for reqd)*	REF	
	780045-103	SHIM INSTL, engine mount (LH) *(see fig. 243 for reqd)*	REF	
	780045-105	SHIM INSTL, engine mount (LH) *(see fig. 243 for reqd)*	REF	
	780045-107	SHIM INSTL, engine mount (LH) *(see fig. 243 for reqd)*	REF	
	780045-109	SHIM INSTL, engine mount (LH) *(see fig. 243 for reqd)*	REF	
-61	776619-101	SHIM ASSY, engine mount inboard	AR	
	780044-101	SHIM ASSY, engine mount inboard	AR	
	780044-103	SHIM ASSY, engine mount inboard	AR	
	780044-105	SHIM ASSY, engine mount inboard	AR	
	780044-107	SHIM ASSY, engine mount inboard	AR	
		Attaching Parts		
	AN507-832R10	SCREW (88044)	2	
	AN960-8	WASHER (88044)	2	
	MS21042L08	NUT (96906)	2	
	780045-102	SHIM INSTL, engine mount (RH) *(see fig. 243 for reqd)*	REF	
	780045-104	SHIM INSTL, engine mount (RH) *(see fig. 243 for reqd)*	REF	
	780045-106	SHIM INSTL, engine mount (RH) *(see fig. 243 for reqd)*	REF	
	780045-108	SHIM INSTL, engine mount (RH) *(see fig. 243 for reqd)*	REF	
	780045-110	SHIM INSTL, engine mount (RH) *(see fig. 243 for reqd)*	REF	
-62	776620-101	SHIM ASSY, engine mount outboard	AR	
	780043-1	SHIM ASSY, engine mount outboard	AR	
	780043-3	SHIM ASSY, engine mount outboard	AR	
	780043-5	SHIM ASSY, engine mount outboard	AR	
	780043-7	SHIM ASSY, engine mount outboard	AR	
		Attaching Parts		
	AN507-832R10	SCREW (88044)	1	
	AN960-8	WASHER (88044)	1	
	MS21042L08	NUT (96906)	1	
-63	761723	SEAL, front engine mount *(see fig. 243 for reqd)*	REF	

Figura e particolare	NDR	DENOMINAZIONE 1 2 3 4 5 6 7	Quant.	Codice applicab.
		POWER PLANT GUIDE RAIL		
252	775057-1	GUIDE RAIL INSTL, engine *(see fig. 31 for reqd)*	REF	
	775057-5	TRACK ASSY, engine guide rail	1	
-1	775057-7	TRACK, engine guide rail *(see fig. 251 for reqd)*	1	
-2	761693-3L	SUPPORT, fus sta 527 engine guide rail	1	
-3	761693-3R	SUPPORT, fus sta 527 engine guide rail	1	
-4	761693-4L	SUPPORT, fus sta 533 engine guide rail	1	
-5	761693-4R	SUPPORT, fus sta 533 engine guide rail	1	
-6	761693-5L	SUPPORT, fus sta 540 engine guide rail	1	
-7	761693-5R	SUPPORT, fus sta 540 engine guide rail	1	
-8	761693-6L	SUPPORT, fus sta 546 engine guide rail	1	
-9	761693-6R	SUPPORT, fus sta 546 engine guide rail	1	
-10	761693-7L	SUPPORT, fus sta 553 engine guide rail	1	
-11	761693-7R	SUPPORT, fus sta 553 engine guide rail	1	
-12	775666-1	SUPPORT, fus sta 559 engine guide rail	1	
-13	761693-8R	SUPPORT, fus sta 559 engine guide rail	1	
-14	775665-1	BRACE, fus sta 566 engine guide rail	1	
-15	775665-2	BRACE, fus sta 566 engine guide rail	1	
-16	775664-1	BRACE, fus sta 566 engine guide rail	1	
-17	775667-1	SUPPORT, fus sta 573 engine guide rail	1	
-18	761693-10R	SUPPORT, fus sta 573 engine guide rail	1	
-19	761693-11L	SUPPORT, fus sta 586 engine guide rail	1	
-20	761693-11R	SUPPORT, fus sta 586 engine guide rail	1	
-21	761693-12L	SUPPORT, fus sta 593 engine guide rail	1	
-22	761693-12R	SUPPORT, fus sta 593 engine guide rail	1	
-23	761693-13L	SUPPORT, fus sta 600 engine guide rail	1	
-24	761693-13R	SUPPORT, fus sta 600 engine guide rail	1	
-25	761693-14L	SUPPORT, fus sta 607 engine guide rail	1	
-26	761693-14R	SUPPORT, fus sta 607 engine guide rail	1	
-27	769610-1	CLIP, track support	1	
-28	769610-2	CLIP, track support	1	
		Attaching Parts		
-29	NAS1203-4	SCREW (80205)	1	
-30	MS21042L3	NUT (96906)	1	
		*		
-31	761694	ANGLE, engine guide rail	2	
		Attaching Parts		
-32	NAS1203-6	SCREW (80205)	2	
-33	NAS623-3-3	SCREW (80205)	2	
-34	MS21042L3	NUT (96906)	4	
		*		
	775057-3	CLIP INSTL, engine guide rail *(see fig. 31 for reqd)*	REF	
-35	769612-1	BRACKET, fitting retainer	1	
-36	769612-2	BRACKET, fitting retainer	1	
		Attaching Parts		
-37	NAS1203-12	SCREW (80205)	1	
	R3106T6-8	LOCKBOLT (29666)	2	
	R3106T6-13	LOCKBOLT (29666)	2	
	6LC2R6	COLLAR (29666)	4	
-38	MS21042L3	NUT (96906)	1	
-40	MM1501	CATCH, quick release (91927) *(see fig. 243 for reqd)*	REF	
	851052-101	FITTING INSTL, front engine mount (LH) *(see fig. 31 for reqd)*	REF	
-41	761236	FITTING, engine support forward	1	
-42	762184	SHIM, engine support forward	AR	
	761239	BRACKET ASSY, engine support forward	1	
-43	761239-3	ZEE, engine support forward	1	
-44	761239-4	ZEE, engine support forward	1	
-45	NAS1103-4	SCREW (80205)	12	
	MS21042L3	NUT (96906)	12	
-46	NAS1203-7	SCREW (80205)	2	
		*		

Power Plant

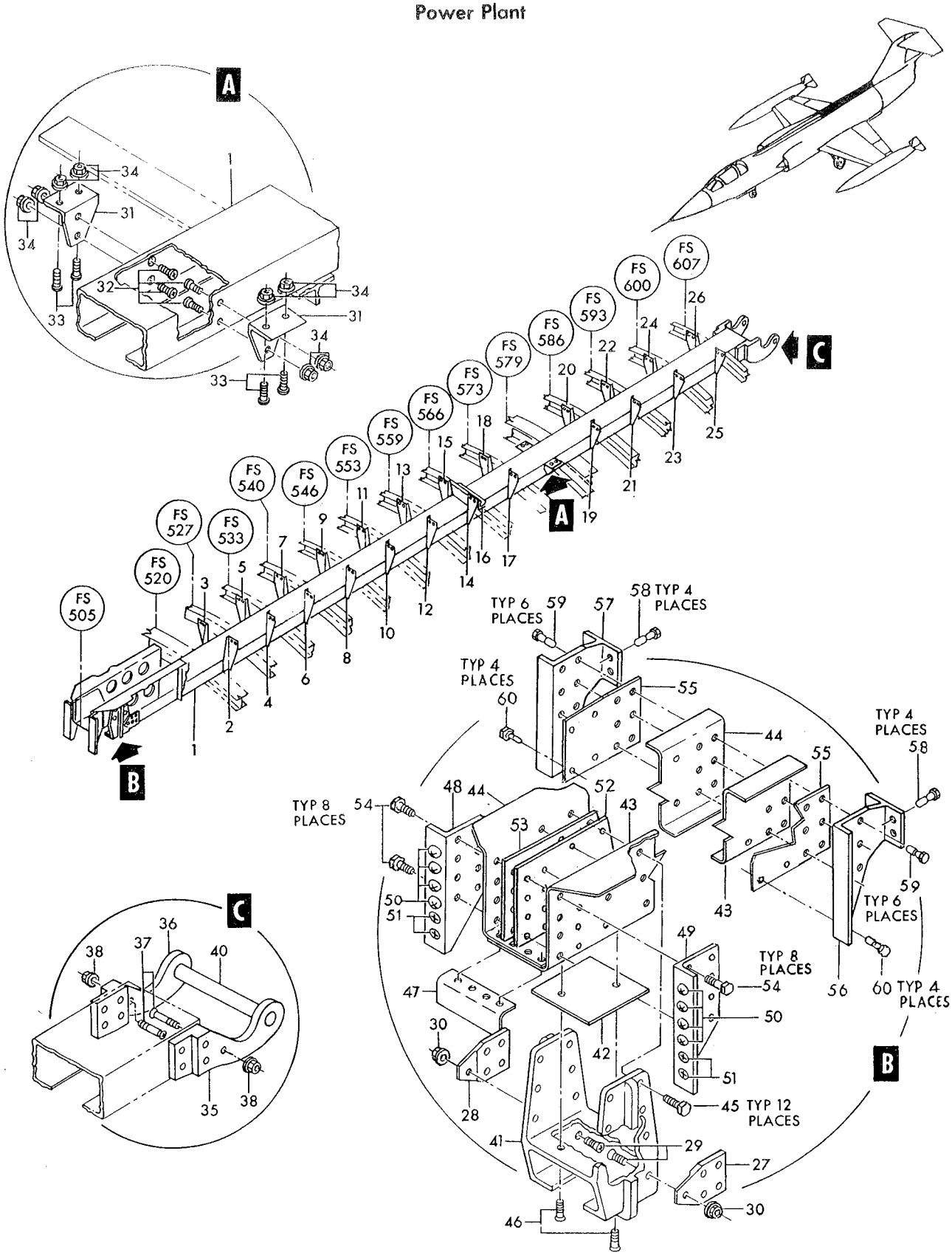

Figure 252 – Power Plant Guide Rail

Figura e particolare	NDR	1 2 3 4 5 6 7 DENOMINAZIONE	Quant.	Codice applicab.
252-47	761240	BRACE, forward engine	1	
-48	851053-101	ANGLE, front engine mount	1	
-49	851053-102	ANGLE, front engine mount	1	
		Attaching Parts		
-50	NAS623-3-6	SCREW (80205)	8	
-51	NAS1203-5	SCREW (80205)	4	
	AN960-10	WASHER (88044)	12	
	MS21042L3	NUT (96906)	12	
		*		
-52	851054-101	DOUBLER, front engine mount	1	
-53	851054-102	DOUBLER, front engine mount	1	
		Attaching Parts		
-54	NAS1104-6	BOLT (80205)	16	
	AN960-416	WASHER (88044)	16	
		*		
	851052-103	ANGLE INSTL, front engine mount (RH) *(see fig. 31 for reqd)*	REF	
-55	851055-101	DOUBLER, front engine mount	2	
-56	761237L	CLIP, forward engine support	1	
-57	761237R	CLIP, forward engine support	1	
		*		
-58	PP200-5	JO-BOLT (98524)	8	
-59	PP260-6	JO-BOLT (98524)	12	
-60	PP260-4	JO-BOLT (98524)	8	

Figura e particolare	NDR	1 2 3 4 5 6 7 DENOMINAZIONE	Quant.	Codice applicab.
		GENERATOR COOLING AND GROUND STARTER AIR DUCTS		
253	784341-503	TUBE INSTL, generator and alternator cooling (NHA 849140-101)	1	
- 1	789805-1	TUBE, generator air intake	1	
- 2	2487-32A	CLAMP ASSY, hot air (98159)	1	
		Attaching Parts		
	NAS623-3-2	SCREW (80205)	1	
	AN960D10	WASHER (88044)	1	
	MS21042L3	NUT (96906)	1	
- 3	2104-32	SEAL ASSY, standard aluminum (98159)	1	
- 4	AN735D32	CLAMP (88044)	1	
- 5	MS25083-1BB4	JUMPER (96906)	1	
		Attaching Parts		
	AN520-10R8	SCREW (88044)	1	
	AN960D10	WASHER (88044)	1	
	MS21042L3	NUT (96906)	1	
	784341-501	TUBE INSTL, generator and alternator cooling (NHA 849140-101)	1	6701-6812
	784341-101	TUBE INSTL, generator and alternator cooling (NHA 849140-101)	1	6813-
- 6	763700-13	TUBE ASSY, generator intake	1	
- 6A	NAS1395C10L	INSERT (80205)	1	
- 7	2487-32A	CLAMP ASSY, hot air (98159)	1	
		Attaching Parts		
	NAS623-3-2	SCREW (80205)	1	
	AN960D10	WASHER (88044)	1	
	MS21042L3	NUT (96906)	1	
- 8	2104-32	SEAL ASSY, standard aluminum (98159)	1	
- 9	AN735D32	CLAMP (88044)	1	
-10	MS25083-1BB4	JUMPER (96906)	1	
		Attaching Parts		
	AN520-10R8	SCREW (88044)	1	
	AN960D10	WASHER (88044)	1	
	MS21042L3	NUT (96906)	1	
-11	135C	TRANSDUCER, (R35) compressor inlet temperature (04274) (Lockheed spec dwg 622269-1)	1	6701-6750
	135L	TRANSDUCER, (R35) compressor inlet temperature (04274) (Lockheed spec dwg 622269-101)	1	6751-
-11A	AN900-10	GASKET (88044)	1	
	784341-5	ELBOW INSTL, generator and alternator cooling (NHA 849140-101)	1	
-12	763699R	ELBOW, generator air intake	1	
	784341-3	VALVE INSTL, generator and alternator cooling (NHA 849140-101)	1	
-13	784341-19	VALVE ASSY, generator and alternator cooling duct	1	
-14	784342-1	VALVE, generator and alternator air intake	1	
-15	784350-1	SHAFT, generator and alternator air intake valve	1	
-16	784345-1	COUNTERWEIGHT, generator and alternator air intake valve	1	
-17	784344-1	FLAP, generator and alternator air intake valve	1	
	851020-101	TUBE INSTL, generator and alternator cooling (NHA 849140-101)	1	
-18	850657-101	A. TUBE ASSY, alternator air intake *(see fig. 122)*	1	
	784348-1	B. TUBE ASSY, alternator air intake *(see fig. 122)*	1	
-19	2487-32A	CLAMP ASSY hot air (98159)	1	
		Attaching Parts		
	NAS623-3-2	SCREW (80205)	1	
	AN960D10	WASHER (88044)	1	
	MS21042L3	NUT (96906)	1	
-20	2104-32	SEAL ASSY, standard aluminum (98159)	1	
-21	2650-24	CLAMP ASSY, breakaway padded (98159)	2	

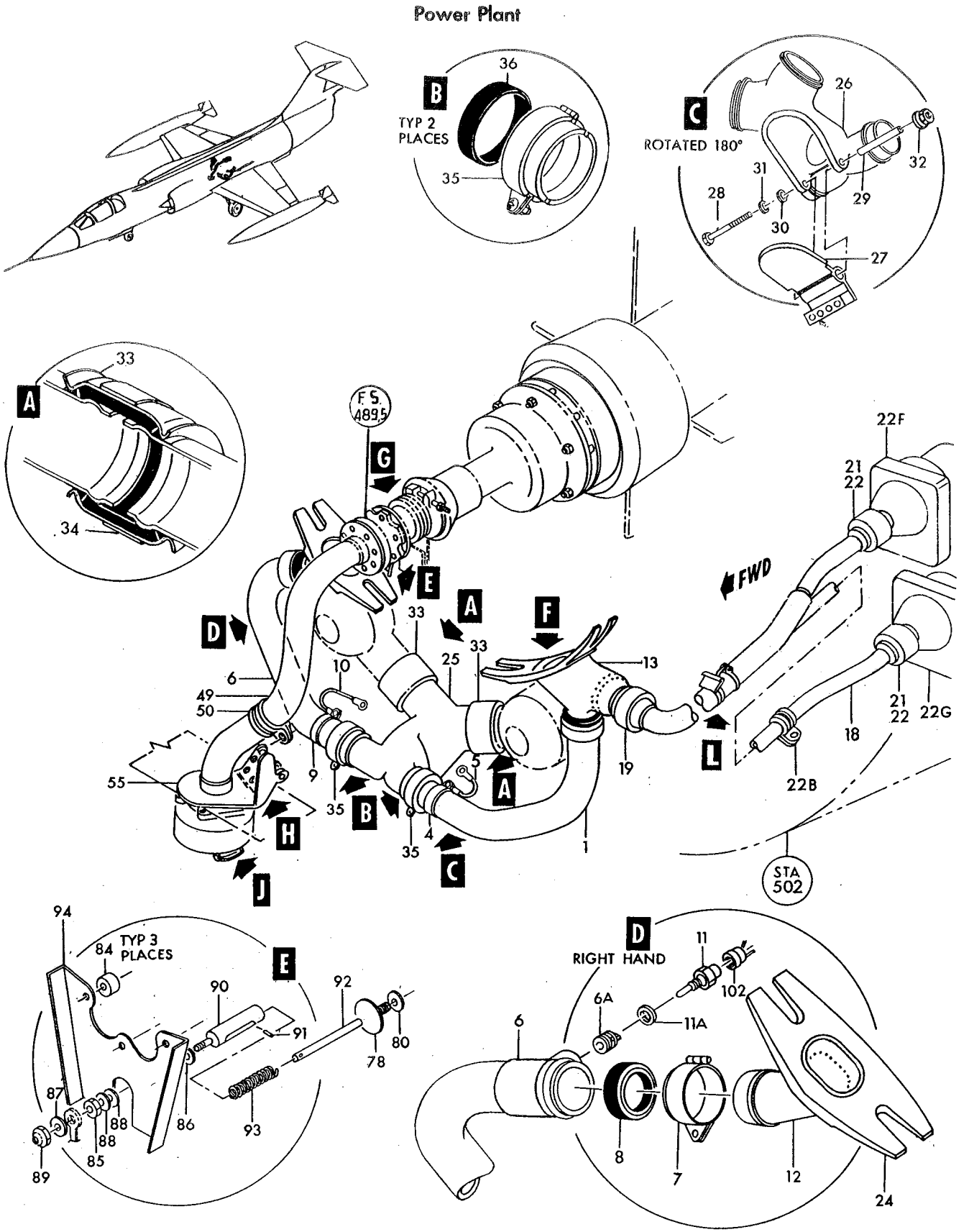

Figure 253 — Generator Cooling and Ground Starter Air Ducts (Sheet 1 of 3)

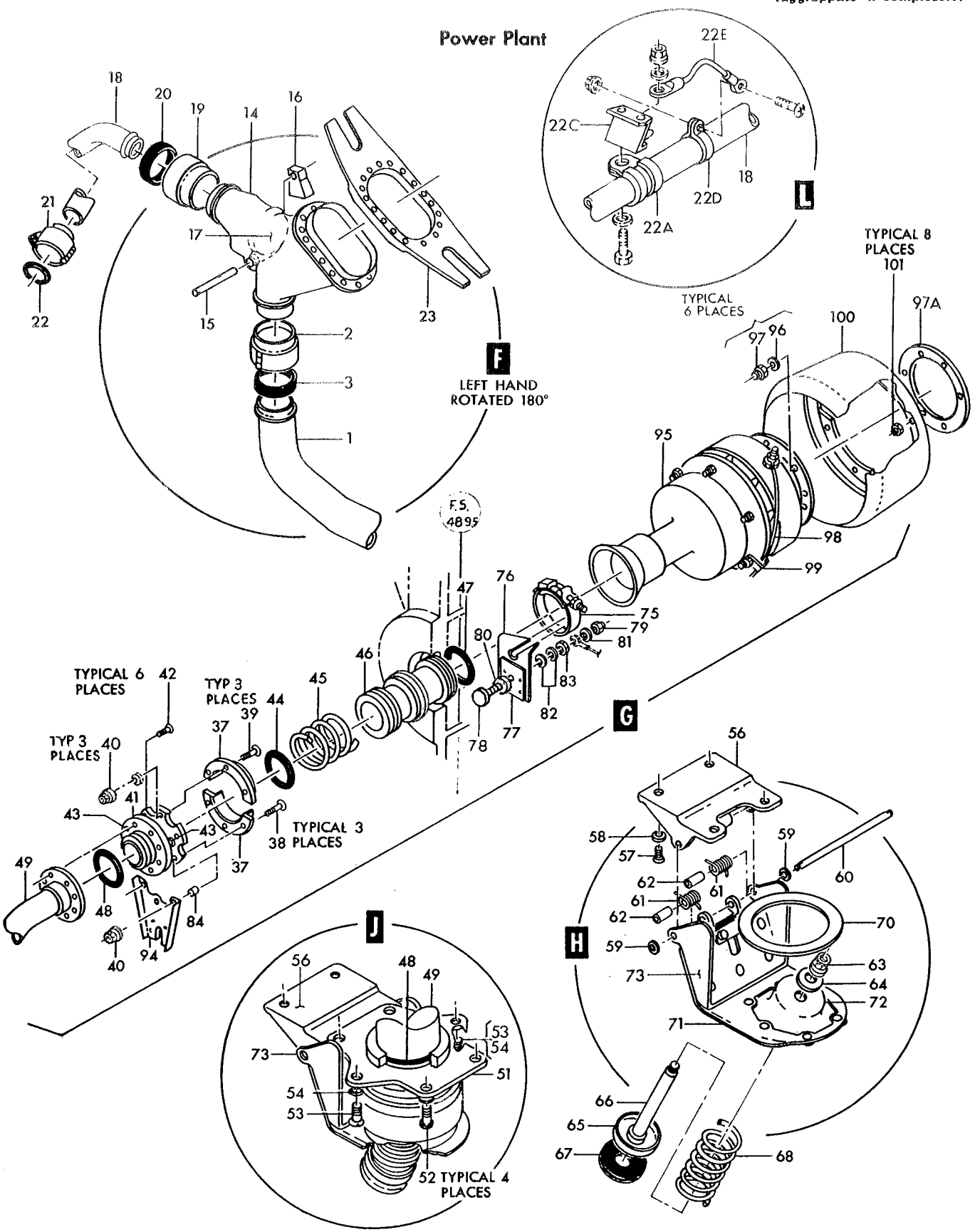

Figure 253—Generator Cooling and Ground Starter Air Ducts (Sheet 2 of 3)

Power Plant

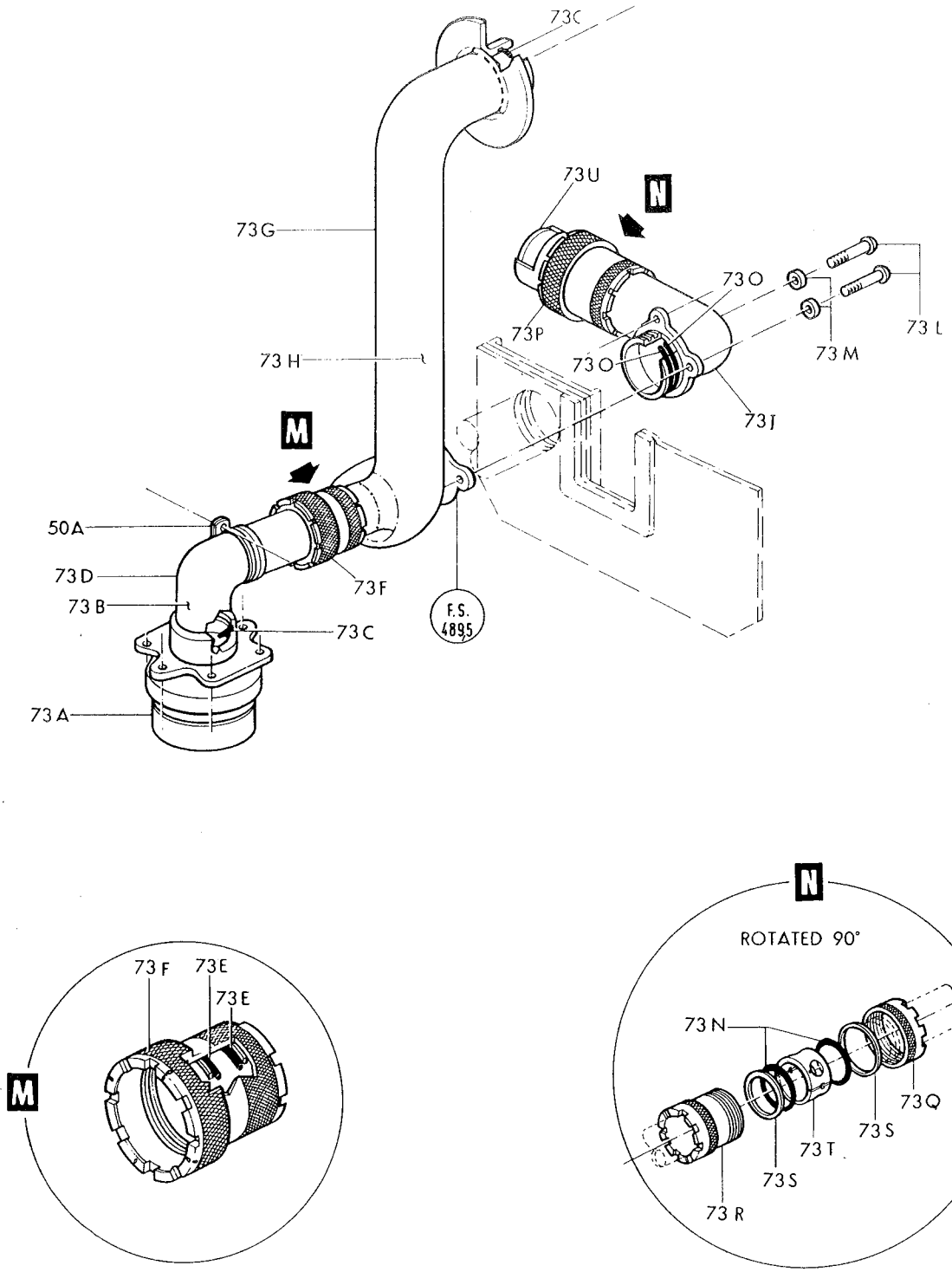

Figure 253-Generator Cooling and Ground Starter Air Ducts (Sheet 3 of 3)

Figura e particolare	NDR	1	2	3	4	5	6	7	DENOMINAZIONE	Quant.	Codice applicab.
									Attaching Parts		
253	NAS623-3-2								SCREW (80205)	4	
	AN960D10								WASHER (88044)	4	
	MS21042L3								NUT (96906)	4	
-22	2437-24								SEAL ASSY, hot air breakaway (98159)	2	
-22A	MS21919DG32								CLAMP (96906)	1	
-22B	MS21919DG24								CLAMP (96906)	1	
									Attaching Parts		
	NAS1096-3-10								SCREW (80205)	1	
	NAS1096-3-8								SCREW (80205)	1	
	AN960D10								WASHER (88044)	4	
	MS21042L3								NUT (96906)	2	
-22C	798305-101								BRACKET ASSY, alternator air intake duct	1	6701-6790
	798305-105								BRACKET ASSY, alternator air intake duct	1	6791-
									Attaching Parts		
	NAS603-8								SCREW (80205)	2	
-22D	AN735D32								CLAMP (88044)	1	
-22E	MS25083-2BB4								JUMPER (96906)	1	
									Attaching Parts		
	NAS603-8								SCREW (80205)	1	
	MS21042L3								NUT (96906)	1	
-22F	850931-103								ALTERNATOR INSTL, No. 1 system hydraulic driven *(see fig. 114 for reqd)*	REF	
-22G	850932-103								ALTERNATOR INSTL, No. 2 system hydraulic driven *(see fig. 114 for reqd)*	REF	
-23	784347-1								SUPPORT, generator and alternator cooling duct (LH) *(see fig. 51 for reqd)*	REF	
-24	763702R								SUPPORT, generator and alternator cooling duct (RH) *(see fig. 51 for reqd)*	REF	
	784341-1								VALVE INSTL, generator and alternator cooling (NHA 849071-101)	1	
-25	784341-17								VALVE ASSY, generator and alternator cooling duct	1	
-26	763701								VALVE, generator air intake	1	
-27	763724								FLAP ASSY, generator air intake	1	
-28	AN174H34A								BOLT (88044)	1	
-29	726433-3								BUSHING, air intake valve	1	
-30	AN960D416								WASHER (88044)	1	
-31	MS20002-4								WASHER (96906)	1	
-32	MS21042L4								NUT (96906)	1	
-33	56082								CLAMP, duct (98625) (Lockheed spec dwg 740004-1) (2217-312SH is an alternate)	2	
	2217-312SH								CLAMP, duct (94581) (Lockheed spec dwg 740004-1) (alternate for 56082)	REF	
-34	LS1611A12-10								HOSE, flexible air duct (36659)	2	
-35	2487-32A								CLAMP ASSY, hot air (98159)	2	
									Attaching Parts		
	NAS623-3-2								SCREW (80205)	1	
	AN960D10								WASHER (88044)	1	
	MS21042L3								NUT (96906)	1	
-36	2104-32								SEAL ASSY, standard aluminum (98159)	2	
	785808-1								DUCT INSTL, starter air inlet (NHA 849140-101)	1	6701-6790; 6831-
		C.							DUCT INSTL, starter air inlet (NHA 849140-101)	1	6791-6830
	785808-3								DUCT ASSY, starter air inlet	1	
-37	762994								FLANGE, air intake starter half	2	
									Attaching Parts		
-38	NAS623-3-9								SCREW (80205)	3	
-39	NAS623-3-2								SCREW (80205)	3	
-40	MS21042L3								NUT (96906)	3	
-41	761494								SUPPORT, air intake starter	1	

Figura e particolare	NDR	1 2 3 4 5 6 7 DENOMINAZIONE	Quant.	Codice applicab.
		Attaching Parts		
253-42	NAS623-3-11	D. . . SCREW (80205)	6	
-43	NAS517-3-9	D. . . SCREW (80205)	2	
-44	MS28775-330	. . . PACKING (96906)	1	
-45	726771-3	. . . SPRING, air intake starter adapter	1	
-46	764692	. . . FITTING, air intake starter adapter	1	
-47	MS28775-330	. . PACKING (96906)	1	
-48	MS28775-226	. . PACKING (96906)	2	6701-6790; 6831-
-49	762973	. . TUBE ASSY, air intake starter	1	6701-6790; 6831-
-50	TA732S32HR	. . CLAMP, loop type support (84971)	1	6701-6790; 6831-
-50A	TA4C74D32T	C. . CLAMP, loop type support (84971)	1	6791-6830
		Attaching Parts		
	NAS1096-3-8	. . SCREW (80205)	1	6701-6790; 6831-
	NAS623-3-14	C. . SCREW (80205)	1	6791-6830
	NAS43HT3-48	C. . SPACER (80205)	1	6791-6830
	MS21042L3	D. . NUT (96906)	1	
-51	773165-1	. . NIPPLE, starter air ground connector	1	6701-6790; 6831-
		Attaching Parts		
-52	NAS623-3-6	. . SCREW (80205)	4	6701-6790; 6831-
-53	NAS623-3-7	D. . SCREW (80205)	2	
-54	AN960D10	D. . WASHER (88044) (2 maximum)	AR	
	776635-1	D. . SHIM, air inlet starter connector cover inboard	AR	
	785807-5	. . COVER INSTL, starter air inlet connector	1	6701-6790; 6831-
		C. . COVER INSTL, starter air inlet connector	1	6791-6830
-55	785807-7	. . . COVER ASSY, starter air inlet connector	1	
-56	769205-1	. . . . BASE, starter air inlet cover connector	1	
		Attaching Parts		
-57	NAS623-3-4	D. . . . SCREW (80205)	2	
-58	AN960D10	D. . . . WASHER (88044) (2 maximum)	AR	
	776634-1	D. . . . SHIM, air inlet starter connector cover outboard	AR	
	MS24665-149	. . . . COTTER PIN (96906)	2	
-59	LS881-2	. . . . WASHER, plain aluminum (36659)	2	
-60	NAS427W60	. . . . PIN (80205)	1	
-61	727948-1	. . . . SPRING, starter connector cover	2	
-62	NAS43DD3-34	. . . . SPACER (80205)	2	
-63	MS21042L4	. . . . NUT (96906)	1	
-64	LS881-10	. . . . WASHER, plain aluminum (36659)	1	
-65	797632-1	. . . . BUMPER ASSY, starter connector cover	1	
-66	797632-3	. . . . BOLT, starter connector cover	1	
-67	797632-5	. . . . BUMPER, starter connector cover	1	
-68	727347-1	. . . . SPRING, starter connector cover outer	1	
	785587-1	. . . . COVER ASSY, starter air inlet connector	1	
	785587-3	. . . . . COVER ASSY, starter air inlet connector	1	
-70	769216-3	. . . . . SEAL, starter connector cover	1	
-71	784760-1	. . . . . COVER, starter connector	1	
-72	769213-1	. . . . FITTING, starter connector cover	1	
-73	769207-1	. . . . ARM, starter connector cover	1	
-73A	SM2332	C. . NIPPLE ASSY, air ground starter connector (A0303) (Lockheed spec dwg 672849-101)	1	6791-6830
-73B	LS7578B7	C. . DECAL, ident. (36659)	1	6791-6830
-73C	MS9068-226	C. . PACKING (96906)	2	6791-6830
-73D	785201-125	C. . TUBE ASSY, air intake starter elbow	1	6791-6830
-73E	MS9068-329	C. . PACKING (96906)	2	6791-6830
-73F	3605-32D	. . COUPLING ASSY, flexible (79326)	1	6791-6830
	852697-101	C. . TUBE ASSY, fwd of firewall starter air	1	6791-6830
-73G	852697-103	C. . . TUBE ASSY, fwd of firewall starter air	1	6791-6830

Figura e particolare	NDR	1 2 3 4 5 6 7 DENOMINAZIONE	Quant.	Codice applicab.
253-73H	LS7578B7	C. . . DECAL, ident. (36659)	1	6791-6830
-73I	852703-101	C. . TUBE ASSY, aft firewall starter air	1	6791-6830
		Attaching Parts		
-73L	NAS623-3-8	C. . SCREW (80205)	2	6791-6830
-73M	AN960C10L	C. . WASHER (88044)	2	6791-6830
-73N	MS9068-333	C. . PACKING (96906)	2	6791-6830
-73O	MS9068-145	C. . PACKING (96906)	2	6791-6830
-73P	3605-40D	C. . COUPLING, flexible (79326)	1	6791-6830
-73Q	3605-24D3	C. . . NUT ASSY (79326)	1	6791-6830
-73R	3601-24D1	C. . . BODY (79326)	1	6791-6830
-73S	3605-24D9	C. . . WASHER (79236)	2	6791-6830
-73T	3605-24D4	C. . . RETAINER HALF (79326)	2	6791-6830
-73U	FL0901-101	C. . CAP ASSY (A0019)	1	6791-6830
	764165-105	. DISCONNECT INSTL, engine starter *(see fig. 243 for reqd)*	REF	
-75	764165-103	. . CLAMP, engine starter disconnect assembly (98625)	1	
	764165-5	. . DISCONNECT ASSY, engine starter	1	
	764163	. . . BRACKET ASSY, engine starter disconnect	1	
-76	764163-3	. . . . BRACKET, engine starter disconnect	1	
-77	765145-1	. . . . INSULATOR, engine starter disconnect bracket	1	
-78	764162	. . . CONTACT DISC, engine starter disconnect	1	
-79	AN345-10	. . . NUT (88044)	1	
-80	AN960C416	. . . WASHER (88044)	1	
-81	AN935-10L	. . . WASHER (88044)	1	
-82	AN960-10L	. . . WASHER (88044)	2	
-83	22NM02	. . . NUT, self locking (72962)	1	
	764165-7	. DISCONNECT INSTL, (J92) engine starter *(see fig. 192 for reqd)*	REF	
-84	767206-1	. . SPACER, engine starter disconnect	3	
	764165-9	. . DISCONNECT ASSY, engine starter	1	
-85	22NM02	. . . NUT, self locking (72962)	1	
-86	AN960C416	. . . WASHER (88044)	1	
-87	AN935-10L	. . . WASHER (88044)	1	
-88	AN960-10L	. . . WASHER (88044)	2	
-89	AN345-10	. . . NUT (88044)	1	
	764160-3	. . . HOUSING ASSY, engine starter disconnect	1	
-90	764157-3	. . . . HOUSING, engine starter disconnect	1	
-91	NAS561P2-8	. . . . PIN (80205)	1	
-92	764158-3	. . . . BOLT, engine starter disconnect	1	
-93	726524-3	. . . . SPRING, engine starter disconnect	1	
-94	764161	. . . BRACKET ASSY, forward engine starter disconnect	1	
-95	589835	. STARTER, (E23) aircraft engine pneumatic (A0076) (73090) (Lockheed spec dwg 632234-103) (see T. O. 2JA3-13-14) *(see fig. 243 for reqd)*	REF	
		Attaching Parts		
-96	MS20002-6	. WASHER (96906)	6	
-97	1801-064	. NUT (72962)	6	
-97A	MS9136-01	. GASKET (96906)	1	
	784128-1	. ELECTRICAL INSTL, power plant *(see fig. 244 for reqd)*	REF	
-98	764187-1	. . HARNESS ASSY, engine starter	1	
-99	MS21919H2	. . CLAMP (96906)	1	
-100	764140	. FAIRING ASSY, engine starter *(see fig. 243 for reqd)*	REF	
		Attaching Parts		
-101	MS21042L4	. NUT (96906)	8	
	849538-101	. HARNESS ASSY, generator No. 2 to ammunition compartment *(see fig. 194 for reqd)*	REF	
-102	MS3106K12S3S	. . CONNECTOR, (P110) plug (engine temperature bulb) (96906)	1	
	MS3057-4A	. . ADAPTER (96906)	1	

A - Only for AWX - Modified per AA.1F-104S-OT-145A
B - Only for FB
C - Only per partial incorporation of SPU system
D - All parts marked with letter D serve also to install partial incorporation of SPU system

Figura e particolare	NDR		DENOMINAZIONE 1 2 3 4 5 6 7	Quant.	Codice applicab.
			ENGINE AIR BYPASS FLAPS AND STRUCTURE		
254	785323-107	A.	FLAP ASSY, air bypass *(see fig. 125 for reqd)*	REF	6701-6740
	851056-103	B.	FLAP ASSY, air bypass *(see fig. 125 for reqd)*	REF	6741-
- 1	766307-1		FRAME ASSY, engine air by-pass flap	1	
			Attaching Parts		
- 2	AN174H21A		BOLT (88044)	4	
- 3	RZA10766		STUD (83324)	20	
- 4	MS21043-3		NUT (96906)	20	
- 5	MS21042L4		NUT (96906)	4	
			☼		
- 6	763177-3L		CLIP, frame support	1	
- 7	763177-4R		CLIP, frame support	1	
- 8	763177-3R		CLIP, frame support	1	
- 9	763177-4L		CLIP, frame support	1	
-10	763371L		BRACE, frame support	7	
			Attaching Parts		
-11	NAS1203-4		SCREW (80205)	1	
-12	MS20004-6		BOLT (96906)	1	
-13	AN960D10		WASHER (88044)	1	
-14	MS20002C4		WASHER (96906)	1	
-15	MS21042L3		NUT (96906)	1	
			☼		
-16	763371R		BRACE, frame support	7	
			Attaching Parts		
-17	NAS1203-4		SCREW (80205)	1	
-18	MS20004-6		BOLT (96906)	1	
-19	AN960D10		WASHER (88044)	1	
-20	MS20002C4		WASHER (96906)	1	
-21	MS21042L3		NUT (96906)	1	
			☼		
-22	763175		HINGE, flap support	10	
-23	763178		SPLICE ASSY, frame support	1	
			Attaching Parts		
-24	NAS1203-4		SCREW (80205)	4	
-24A	NAS1203-5		SCREW (80205)	2	
-25	AN960D10		WASHER (88044)	6	
-26	MS21042L3		NUT (96906)	6	
			☼		
-27	771563-1		FRAME, air bypass flap support	1	
	771564-1		PANEL INSTL, lower engine air by-pass	1	
-28	771564-3		PANEL ASSY, lower engine air by-pass	1	
			Attaching Parts		
-29	AN174H22A		BOLT (88044)	4	
-30	AN174H23A		BOLT (88044)	4	
-31	MS21042L4		NUT (96906)	8	
			☼		
-32	763190L		BRACE, panel support	1	
-33	771560-1		BRACE, air by-pass panel	1	
-34	771560-2		BRACE, air by-pass panel	1	
-35	763190R		BRACE, panel support	1	
-36	772423-1		SHIM, air by-pass screen	2	
-37	772422-1		SHIM, air by-pass screen	2	
-38	771561-1		BEAM, lower engine air by-pass panel support	1	
-39	771562-1		PANEL, lower engine air by-pass	1	
			Attaching Parts		
-42	MS20004-6	A.	BOLT (96906)	1	6701-6740
-43	NAS1203-5	B.	SCREW (80205)	4	
-43A	NAS1203-3	A.	SCREW (80205)	1	6701-6740
-44	MS20002C4	A.	WASHER (96906)	1	6701-6740
-45	MS21042L3	B.	NUT (96906)	4	

Power Plant

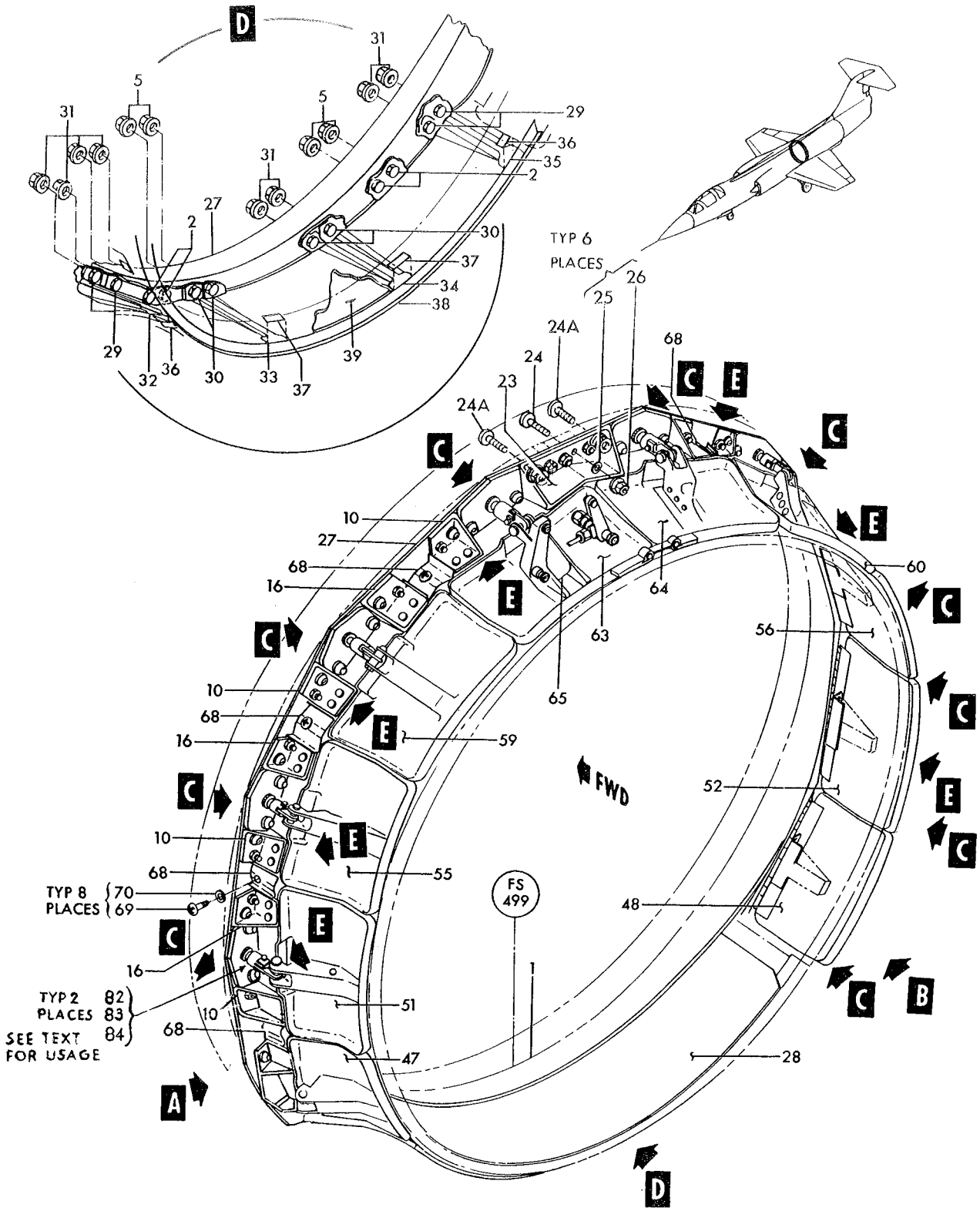

P56-12-824

Figure 254— Engine Air Bypass Flaps and Structure (Sheet 1 of 2)

Power Plant

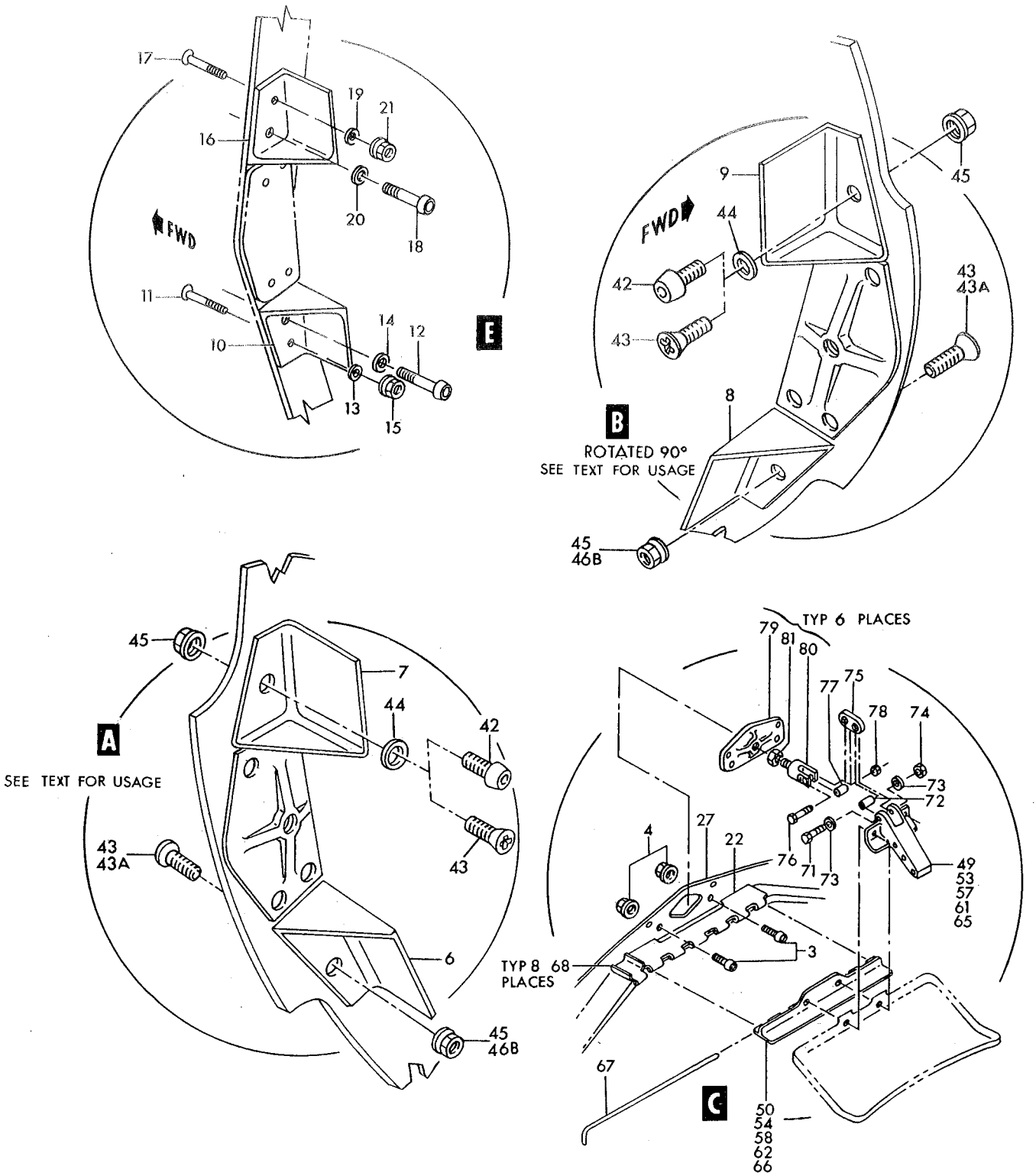

P56-11-364

Figure 254— Engine Air Bypass Flaps and Structure (Sheet 2 of 2)

Figura e particolare	NDR	1	2	3	4	5	6	7	DENOMINAZIONE	Quant.	Codice applicab.
254-46B	MS21042L3	A.							NUT (96906)	1	6701-6740
									*		
-47	763181L								FLAP ASSY, No. 1 air by-pass	1	
-48	763181R								FLAP ASSY, No. 1 air by-pass	1	
-49	763179-3								FITTING, flap actuator	1	
-50	763174								HINGE, air by-pass flap	1	
-51	763182L								FLAP ASSY, No. 2 air by-pass	1	
-52	763182R								FLAP ASSY, No. 2 air by-pass	1	
-53	763179-4								FITTING, flap actuator	1	
-54	763174								HINGE, air by-pass flap	1	
-55	763183L								FLAP ASSY, No. 3 air by-pass	1	
-56	763183R								FLAP ASSY, No. 3 air by-pass	1	
-57	763179-5								FITTING, flap actuation	1	
-58	763174								HINGE, air by-pass flap	1	
-59	763184L								FLAP ASSY, No. 4 air by-pass	1	
-60	763184R								FLAP ASSY, No. 4 air by-pass	1	
-61	763179-6								FITTING, flap actuator	1	
-62	763174								HINGE, air by-pass flap	1	
-63	763185L								FLAP ASSY, No. 5 air by-pass	1	
-64	763185R								FLAP ASSY, No. 5 air by-pass	1	
-65	763179-7								FITTING, flap actuator	1	
-66	763174								HINGE, air by-pass flap	1	
-67	785323-5	A.							PIN, air by-pass hinge	10	6701-6740
	851056-105	B.							PIN, air by-pass hinge	10	
-68	779378-1								RETAINER, hinge pin	8	
									Attaching Parts		
-69	AN502-10-6								SCREW (88044)	1	
-70	AN960-10L								WASHER (88044)	1	
									*		
-71	NAS1104-14D								BOLT (80205)	10	
-72	726353								SPACER, flap link	10	
-73	727010-1								WASHER, air by-pass flap	20	
-74	AN320-4								NUT (88044)	10	
-75	726352								LINK, flap actuator	AR	
	778185-1	B.							LINK, flap actuator (NHA 785323-107 and 851056-103)	AR	
	778185-3	B.							LINK, flap actuator (NHA 785323-107 and 851056-103)	AR	
-76	NAS1103-7D	A.							BOLT (80205)	10	6701-6740
	NAS1103-6D	B.							BOLT (80205)	10	
-77	726354								SPACER, flap link	10	
-78	AN320-3								NUT (88044)	10	
	MS24665-134								COTTER PIN (96906)	20	
-79	785573-1								BASE, air by-pass	6	
-80	785574-1								FORK, air by-pass	6	
-81	H19466-3832								NUT, air by-pass (75237)	6	
-82	785573-1	A.							BASE, air by-pass	2	6701-6740
-83	785574-1	A.							FORK, air by-pass	2	6701-6740
-84	H19466-3832	A.							NUT, air by-pass (75237)	2	6701-6740

A - Removed per AA.1F-104S-OT-138
B - Reqd per AA.1F-104S-OT-138 and AA.1F-104-OT-781

Figura e particolare	NDR	DENOMINAZIONE	Quant.	Codice applicab.
		DRAG CHUTE DOOR		
255	762475-101	HINGE INSTL, drag chute (LH) *(see fig. 32 for reqd)*	REF	
	762475-102	HINGE INSTL, drag chute (RH) *(see fig. 32 for reqd)*	REF	
-1	762481L	HINGE ASSY, drag chute door LH	1	
-2	762481R	HINGE ASSY, drag chute door RH	1	
		Attaching Parts		
-3	NAS221-12	SCREW (80205)	4	
-4	MS20005-14	BOLT (96906)	1	
-5	MS20002-5	WASHER (96906)	1	
-6	MS20002C5	WASHER (96906)	1	
-7	LS2326-5S0-255	BUSHING, plain (36659)	1	
-8	AN960-716L	WASHER (88044)	1	
-9	ZEB1845-054	NUT (72962)	1	
	797273-101	DOOR INSTL, drag chute *(see fig. 32 for reqd)*	REF	6701-6790
	797273-107	DOOR INSTL, drag chute *(see fig. 32 for reqd)*	REF	6791-
-10	797273-103	DOOR ASSY, drag chute	1	6701-6790
	797273-109	DOOR ASSY, drag chute	1	6791-
-11	762475-6	PIN, hinge	1	
	776319-501	CONTAINER INSTL, drag chute	1	6701-6790
	776319-101	CONTAINER INSTL, drag chute	1	6791-
-12	776319-5	CONTAINER ASSY, drag chute	1	6701-6790
	776319-103	CONTAINER ASSY, drag chute	1	6791-
-12B	794608-1	PIN, deceleration parachute upper	2	
-13	762547	KEEPER, drag chute door	1	
-14	NAS623-3-1	SCREW (80205)	1	
-15	726218-3	SPRING, drag chute lower gate	1	
-16	726218-4	SPRING, drag chute lower gate	1	
	797272-101	DOOR ASSY, drag chute	1	
-16A	786931-3	PLATE, arrestor hook scuff	1	
-17	797270-1	BRACKET, drag chute LH	1	
-18	797270-2	BRACKET, drag chute RH	1	
-18A	794609-1	PIN, deceleration parachute lower	2	
-19	762484	HINGE, drag chute gate lower	1	
-20	769565-1	DOOR STOP, drag chute	1	
-21	769495-1	GUARD, drag chute door	1	
-22	MS27253-1	NAMEPLATE (96906)	1	
		Attaching Parts		
	AN515-3R4	SCREW (88044)	4	
	AN936A3	WASHER (under nut) (88044)	4	
	AN340-3	NUT (88044)	4	
-23	793128-1	DOOR ASSY, drag chute gate	1	
-25	793127-1	HINGE, upper drag chute gate	1	
-26	793126-3	HINGE, middle drag chute gate	1	
-27	726221-3	SPRING, drag chute gate upper	2	
-28	762480-7	PIN, drag chute	1	
-30	788087-1	BRACKET, drag chute gate roller	1	
-31	22K1-02	NUT, self-locking cap (72962)	1	
-32	AN960-10	WASHER (88044)	1	
-33	NAS623-3-14	SCREW (80205)	1	
-34	788088-1	ROLLER, drag chute gate	1	
	762477-11	STRUCTURE INSTL, drag chute door (LH) *(see fig. 32 for reqd)*	REF	
	762477-12	STRUCTURE INSTL, drag chute door (RH) *(see fig. 32 for reqd)*	REF	
-35	762477-8L	BRACKET ASSY, drag chute door LH	1	
-36	762477-8R	BRACKET ASSY, drag chute door RH	1	
	762477-10	ACTUATOR INSTL, drag chute door *(see fig. 32 for reqd)*	REF	
	762477-15	ACTUATOR INSTL, drag chute door *(see fig. 32 for reqd)*	REF	
-37	LS1673-3-15	PIN, retainer ring (36659)	1	
-38	AN960-10L	WASHER (88044)	3	

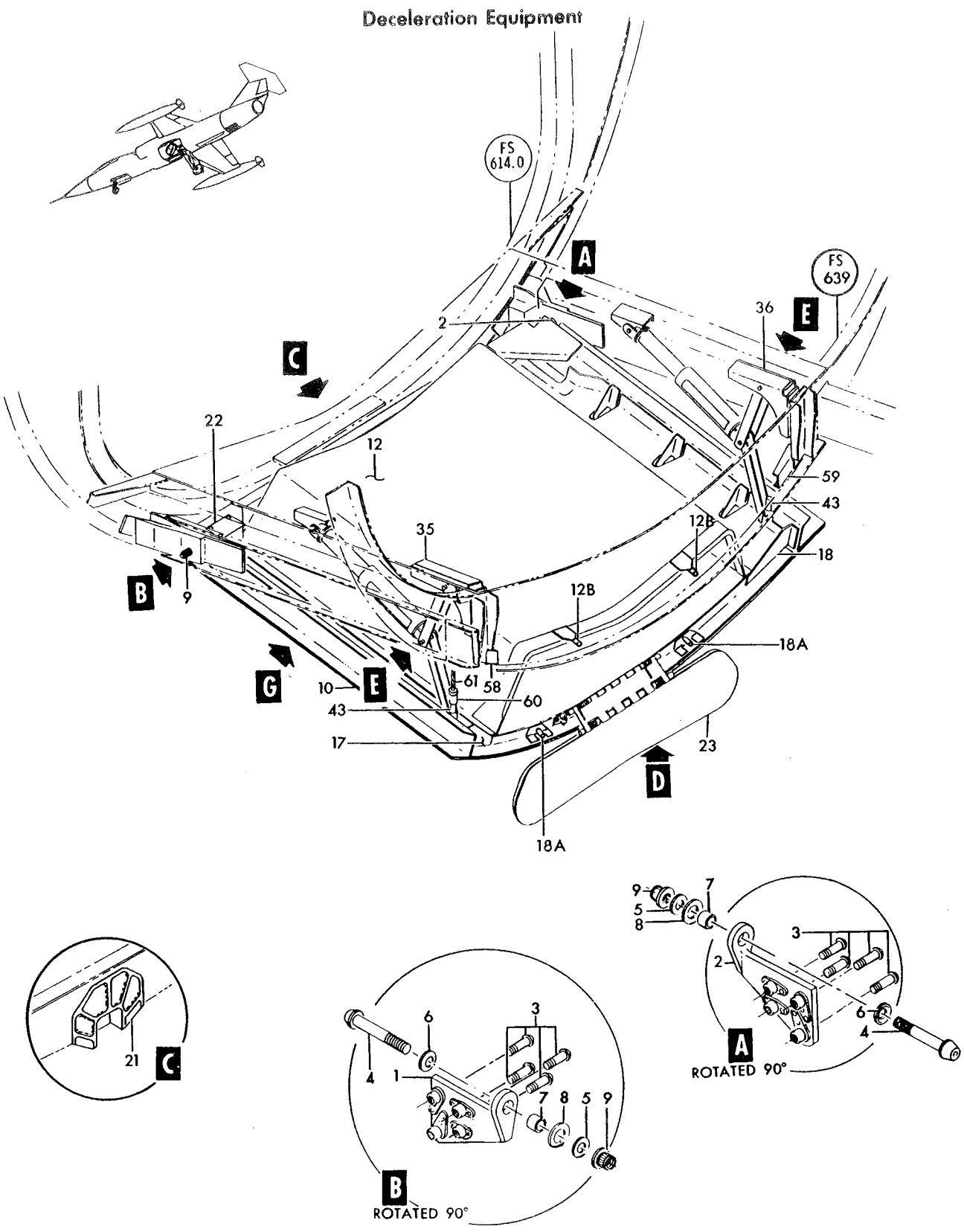

Figure 255— Drag Chute Door (Sheet 1 of 2)

Deceleration Equipment

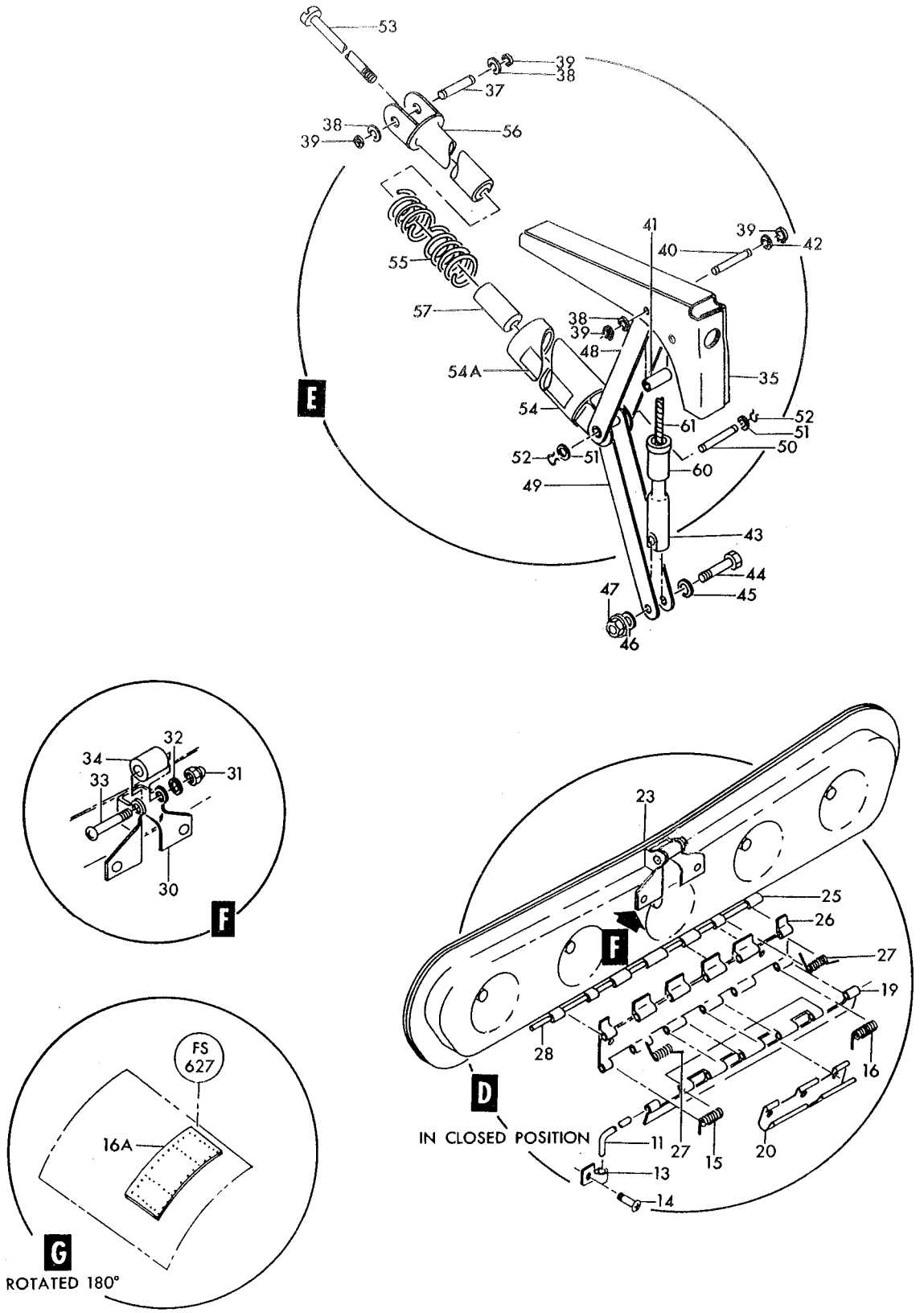

Figure 255— Drag Chute Door (Sheet 2 of 2)

Figura e particolare	NDR	1	2	3	4	5	6	7	DENOMINAZIONE	Quant.	Codice applicab.
255-39	MS16624-1018		.	.					RING (96906)	4	
-40	LS1673-3-18		.	.					PIN, retainer ring (36659)	1	
-41	NAS43DD3-46		.	.					SPACER (80205) (only 762477-10)	1	
	NAS43DD3-46	A.	.	.					SPACER (80205) (only 762477-15)	1	6701-6765
	NAS42DD6-46	B.	.	.					SPACER (80205) (only 762477-15)	1	
-42	AN960-10		.	.					WASHER (88044)	1	
-43	762479		.	.					TRUNNION, drag. chute actuator *(see fig. 257)* (only 762477-10)	1	
-44	NAS1104-14		.	.					BOLT (80205) (only 762477-10)	1	
-45	AN960-416L		.	.					WASHER (88044) (only 762477-10)	1	
-46	AN960-416		.	.					WASHER (88044) (only 762477-10)	1	
-47	MS21042L4		.	.					NUT (96906) (only 762477-10)	1	
	762477-9		.	.					ACTUATOR ASSY, drag chute door	1	
-48	762510		.	.	.				LINK, drag chute door upper	1	
-49	762511		.	.	.				LINK, drag chute door lower	1	
-50	LS1673-3-16		.	.	.				PIN, retainer ring (36659)	2	
-51	AN960-10L		.	.	.				WASHER (88044)	2	
-52	MS16624-1018		.	.	.				RING (96906)	1	
-53	726250-3		.	.	.				SCREW, drag chute door actuator	1	
	AN960D416		.	.	.				WASHER (88044)	1	
	AN310-4		.	.	.				NUT (88044)	1	
	MS24665-153		.	.	.				COTTER PIN (96906)	1	
-54	762512		.	.	.				FITTING ASSY, drag chute actuator	2	
-54A	764405		.	.	.	.			DECAL, drag chute actuator fitting warning	1	
-55	726222-3		.	.	.				SPRING, drag chute door actuator	1	
-56	762513		.	.	.				FITTING, drag chute actuator	1	
-57	762553		.	.	.				BUMPER, drag chute actuator	REF	
	783410-7		.						RING ASSY, fus sta 639 *(see fig. 32 for reqd)*	1	
-58	797271-1		.	.					BRACKET ASSY, drag chute door guide	1	
-59	797271-2		.	.					BRACKET ASSY, drag chute door guide	REF	
-60	762071		.						FITTING, drag chute latch bell *(see fig. 257 for reqd)*	REF	
-61	762636-3		.						CABLE, drag chute door retainer *(see fig. 257 for reqd)*		

A - Removed per AA.1F-104-OT-743A
B - Reqd per AA.1F-104-OT-743A

Figura e particolare	NDR	DENOMINAZIONE	Quant.	Codice applicab.
		DRAG CHUTE HOOK		
256	786598-101	HOOK INSTL, drag chute (NHA 849140-101)	1	
-1	771156-101	HOOK ASSY, drag chute	1	
		Attaching Parts		
-8	MS20004-4	BOLT (96906)	19	
-9	MS20004-6	BOLT (96906)	2	
-10	MS20004-8	BOLT (96906)	6	
-12	MS20002C4	WASHER (96906)	27	
-13	MS20002-4	WASHER (96906)	8	
-14	NAS1104-26	BOLT (80205)	1	
-15	NAS1104-25	BOLT (80205)	1	
-16	762945	BUSHING, drag chute hook	2	
-17	762493	WASHER, drag chute	1	
-18	MS21042L4	NUT (96906)	2	
-19	AN960-416	WASHER (88044)	2	
-20	762506	PIN, drag chute mechanism hook	1	
-21	NAS561P4-16	PIN (80205)	1	
-22	762504	PIN, drag chute inner	1	
-23	762505	PIN, drag chute outer	1	
-24	MS16624-1018	RING (96906)	2	
-25	MS16624-1056	RING (96906)	1	
-26	AN960-10L	WASHER (88044)	1	
-27	762503	PIN, drag chute latch	1	
-28	LS3859-3-8	BUSHING, plain (36659)	1	
-29	762500	LOCK, drag chute latch	1	
-30	764654	SHIM, laminated	1	
-31	771153-1	CAM ASSY, drag chute	1	
-32	776777-1	GUIDE, drag chute D ring	1	
		Attaching Parts		
	AN507-1032R6	SCREW (88044)	2	
-33	762494-101	CATCH ASSY, drag chute lock	1	
-34	762530	ADAPTER, drag chute mechanism	1	
-35	AN960D8	WASHER (88044)	1	
-36	MS21042L08	NUT (96906)	1	
-37	762497	ROLLER ASSY, drag chute mechanism	1	
-38	B10120H	RACE AND NEEDLE ASSY, bearing outer (60380)	1	
-39	762502-101	PIN, drag chute mechanism roller	1	
-40	772281-1	CATCH, drag chute lock	1	
-41	771155-1	ROCKER ASSY, drag chute mechanism	1	
-42	771155-3	ROCKER, drag chute mechanism	1	
-43	771154-1	ARM, drag chute lock	1	
-44	B10120H	RACE AND NEEDLE ASSY, bearing outer (60380)	1	
-45	NAS583-14	SCREW (80205)	1	
-46	MS21042L3	NUT (96906)	1	
-47	AN960-10L	WASHER (88044)	1	
-48	762499	LEVER ASSY, drag chute release mechanism	1	
-49	762597	LEVER, drag chute release mechanism	1	
-50	762501	PIN, drag chute lever	1	
-51	762529	PIN, drag chute lower	1	
	MS16624-1018	RING (96906)	1	
-52	762542	PIN, drag chute spring	1	
-53	762464-501	CARRIER ASSY, drag chute mechanism	1	
-54	762599	RETAINER, bearing drag chute	1	
-55	726233-5	SPRING, drag chute hock	1	
-56	726234-5	SPRING, drag chute rocker	2	
-57	777589-1	CLIP, drag chute mechanism rocker spring lower	1	
-58	773539-1	GUIDE ASSY, drag chute release mechanism	1	
-59	726232-3	SPRING, drag chute cable	1	

Deceleration Equipment

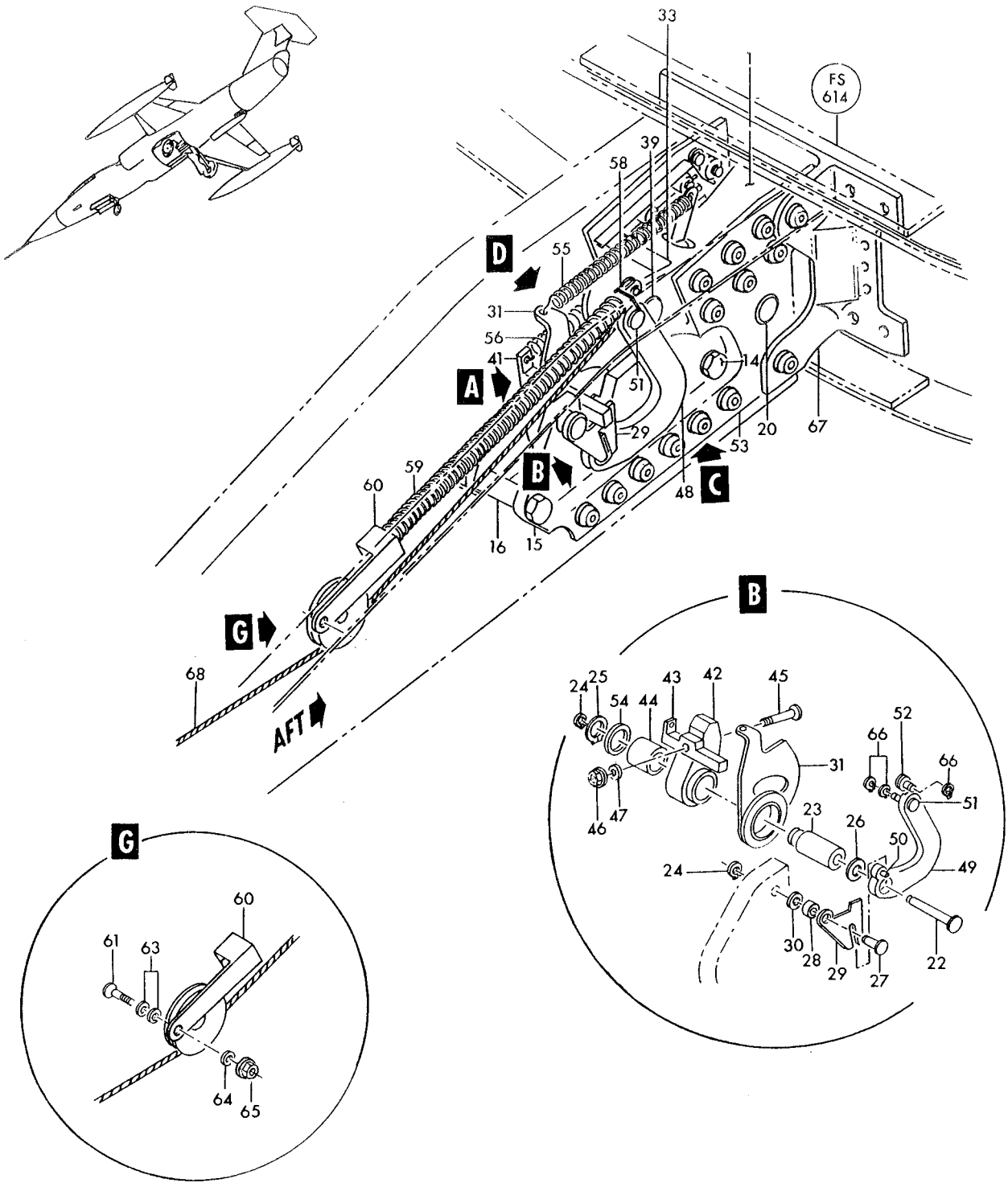

Figure 256— Drag Chute Hook (Sheet 1 of 2)

Deceleration Equipment

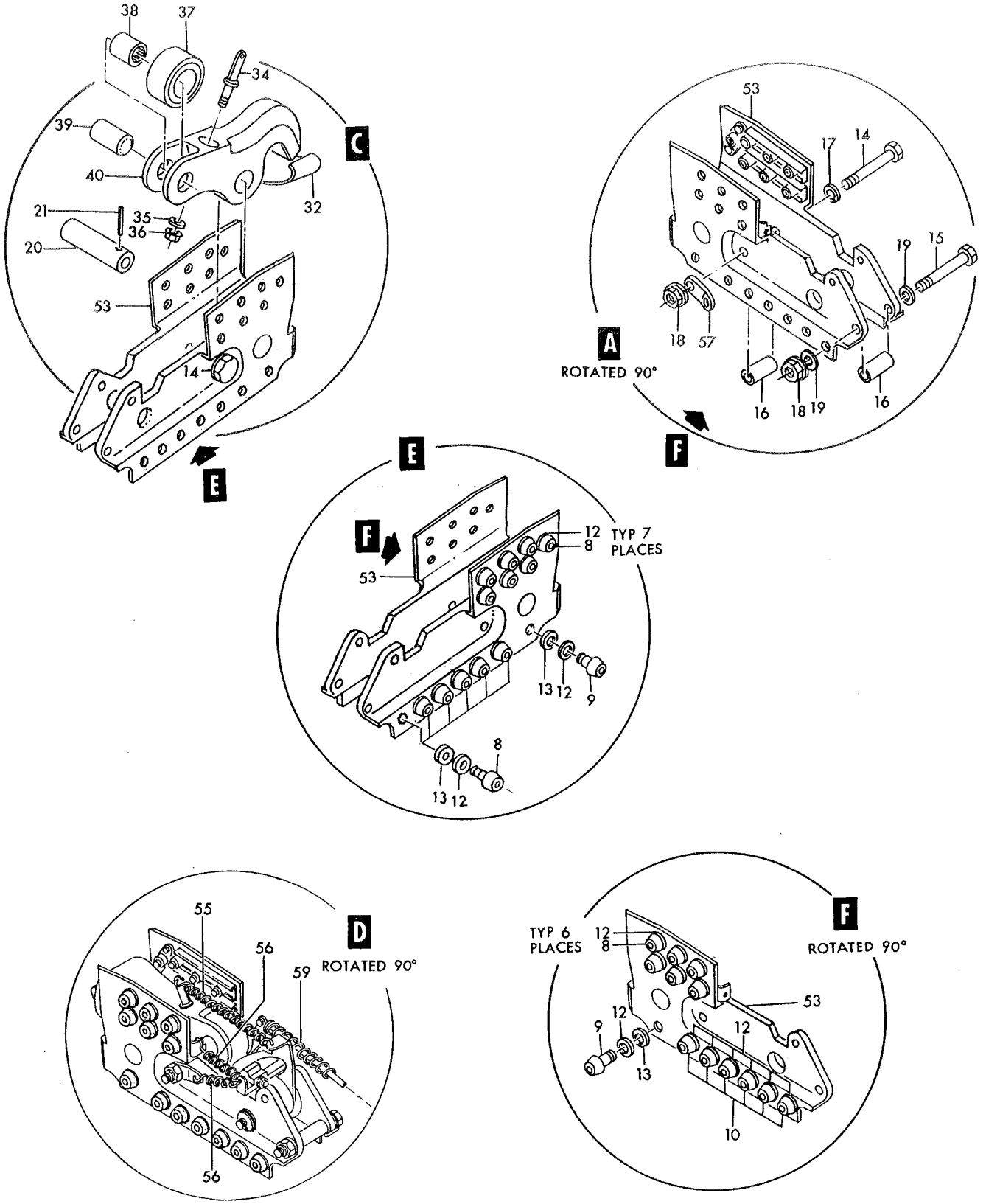

Figure 256—Drag Chute Hook (Sheet 2 of 2)

Loose Equipment

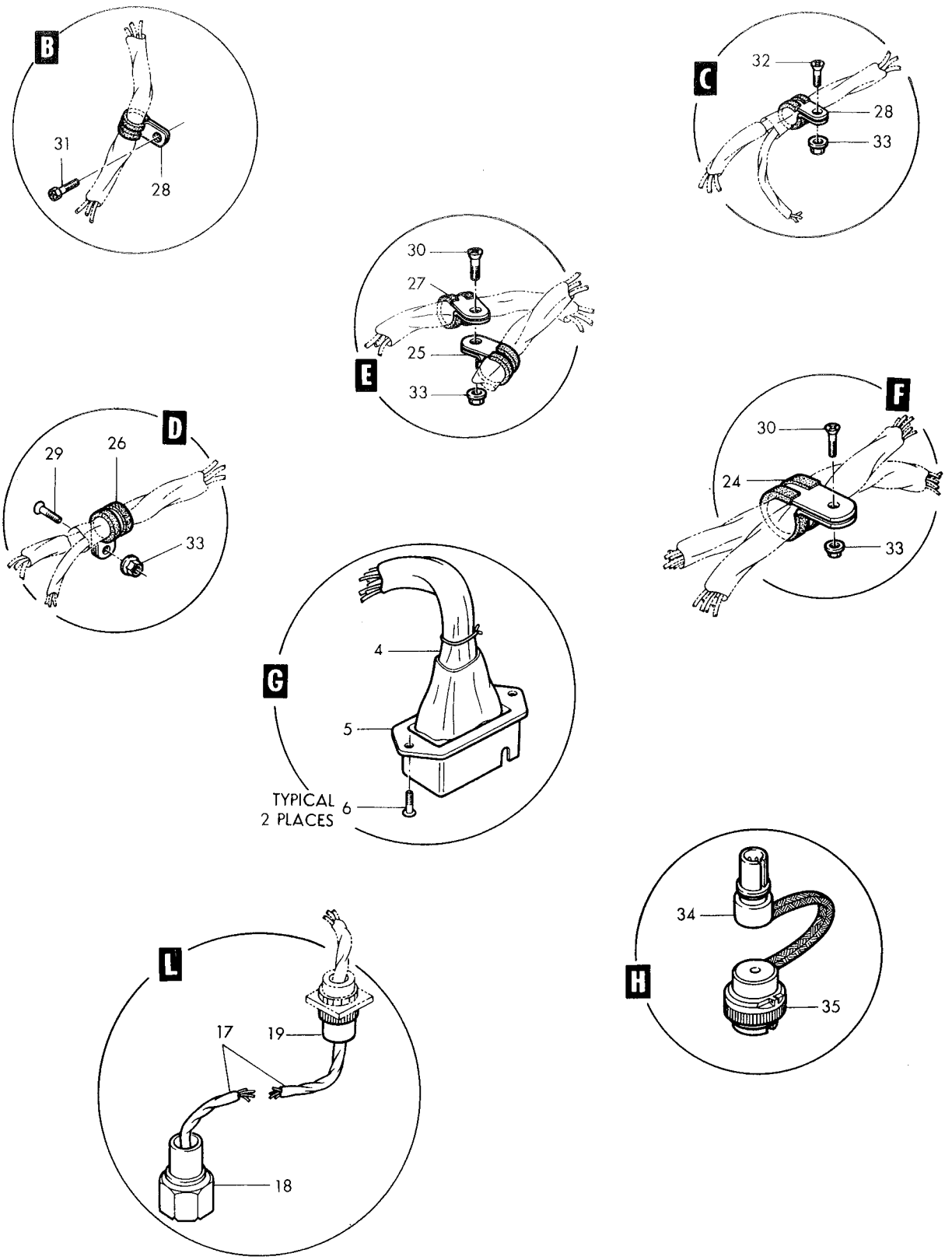

Figure 264–BL.104 Wing Pylon Electrical (Sheet 2 of 2)

Figura e particolare	NDR	1 2 3 4 5 6 7 DENOMINAZIONE	Quant.	Codice applicab.
264-34	CA3106B14S5PF23	A. . . CONNECTOR, plug (71468)	1	
-35	CA3106B14S5SF42	A. . . CONNECTOR, plug (71468)	1	
-36	MAU-50/A	A. . BOMB RACK	2	
-37	MKM0D1	A. . CARTRIGE, stores ejection (see T.O. 11A16-1-7)	2	
-38	ARD446-1	A. . CARTRIGE, stores ejection (aerno 93-0363) (89945) (see T.O. 11A6-1-7) .	2	

A - Only for FB

Figura e particolare	NDR	DENOMINAZIONE 1 2 3 4 5 6 7	Quant.	Codice applicab.
		BL22 FUSELAGE PYLON CONVERSION KIT		
265	849322-101	CONVERSION KIT, BL22 fuselage pylon *(see fig. 260 for reqd)*	REF	
	849346-101	FITTING ASSY, aft fus sta 396 pylon attach	2	
-1	849346-103	FITTING, aft fus sta 396 pylon attach	1	
-2	HSBG8A	BEARING (97613)	1	
-3	849347-101	NUT, aft fus sta 396 pylon attach fitting	2	
-4	728708-103	BOLT, fwd fus sta 396 pylon attach	2	
-5	MS20002C7	WASHER (96906)	2	
-6	728706-101	BOLT, aft fus sta 396 pylon attach	2	
-7	AN960-616	WASHER (88044)	2	
-8	AN320-6	NUT (88044).	2	
	MS24665-285	COTTER PIN (96906)	2	
	851938-113	PYLON ASSY, BL 22 fuselage (LH)	1	
	851938-114	PYLON ASSY, BL 22 fuselage (RH)	1	
-9	851938-103	SEAL	1	
-10	849345-101	BULKHEAD, fuselage pylon (LH)	1	
	849345-102	BULKHEAD, fuselage pylon (RH)	1	
		Attaching Parts		
-11	NAS623-3-2	SCREW (80205).	2	
-12	NAS623-3-3	SCREW (80205).	2	
-13	NAS1203-2	SCREW (80205).	7	
-14	NAS1203-3	SCREW (80205).	11	
-15	NAS1203-4	SCREW (80205).	4	
-18	LS3859F8-14	BUSHING (36659)	2	
-19	851936-101	FAIRING, aft fuselage pylon (LH)	1	
	851936-102	FAIRING, aft fuselage pylon (RH)	1	
-20	851936-107	DOOR, fuselage pylon (LH)	1	
	851936-108	DOOR, fuselage pylon (RH)	1	
		Attaching Parts		
-21	NAS1203-2	SCREW (80205).	13	
-22	NAS1203-3	SCREW (80205).	4	
-23	851936-117	SEAL, aft fuselage pylon	1	
-25	849319-101	BULKHEAD, fuselage pylon	1	
		Attaching Parts		
-26	NAS1203-3	SCREW (80205).	6	
-27	849321-101	COVER, BL22 fuselage pylon access	1	
		Attaching Parts		
-28	NAS514P832-8	SCREW (80205).	2	
-29	849318-101	BULKHEAD, fuselage pylon	1	
		Attaching Parts		
-30	NAS1204-3	SCREW (80205).	4	
-31	NAS1204-5	SCREW (80205).	2	
-32	849315-101	BULKHEAD, fuselage pylon	1	
		Attaching Parts		
-33	NAS623-3-6	SCREW (80205).	1	
-34	NAS623-3-10	SCREW (80205).	3	
-35	NAS1203-6	SCREW (80205).	3	
-36	NAS1203-7	SCREW (80205).	2	
-37	NAS1204-3	SCREW (80205).	4	
-38	NAS1204-7	SCREW (80205).	2	
-39	850999-101	SHIM	AR	
-40	849316-101	FAIRING, lower fuselage pycon	1	
		Attaching Parts		
-41	NAS1203-6	SCREW (80205).	6	

Loose Equipment

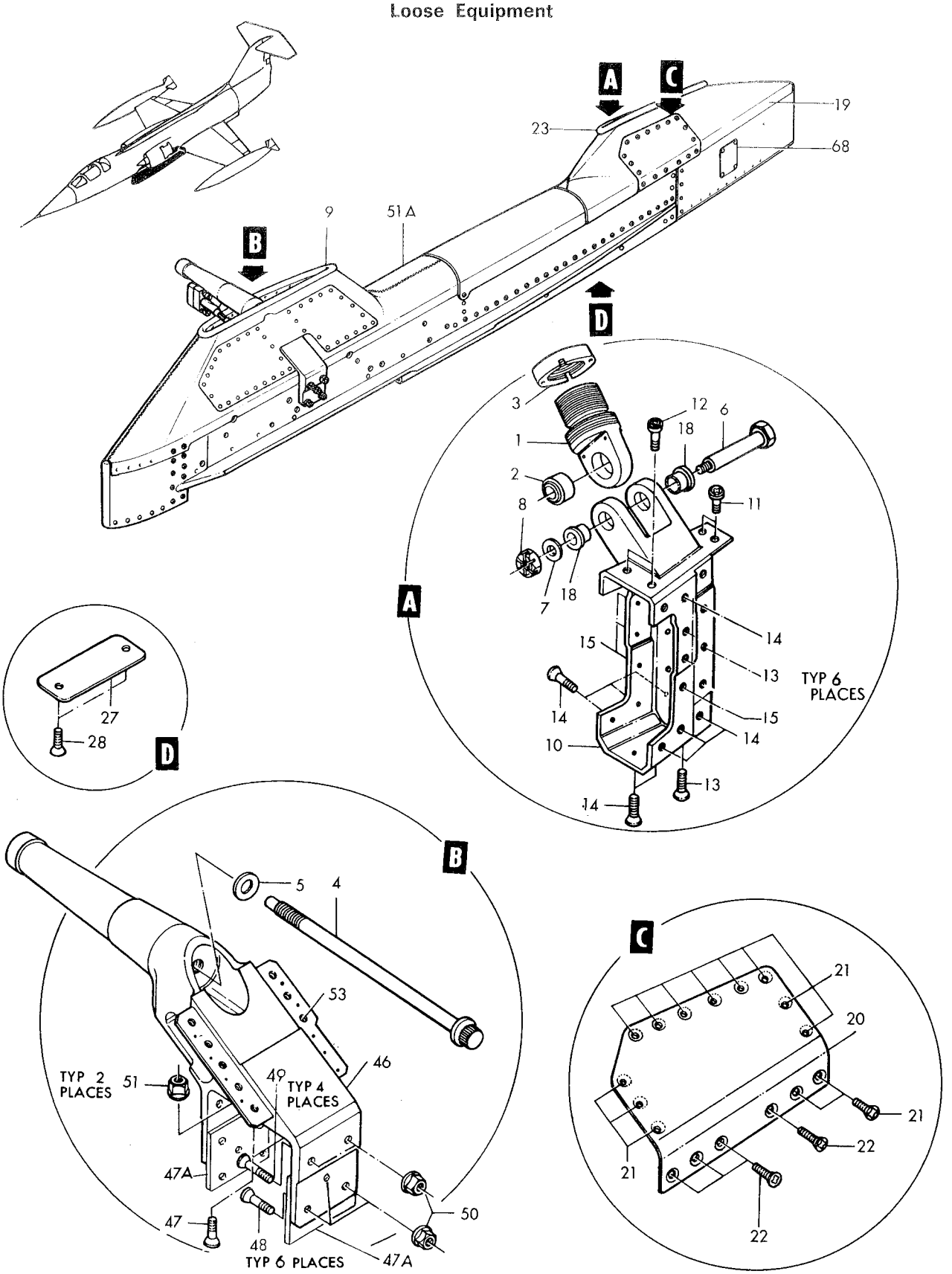

Figure 265–BL.22 Fuselage Pylon Conversion Kit (Sheet 1 of 3)

Loose Equipment

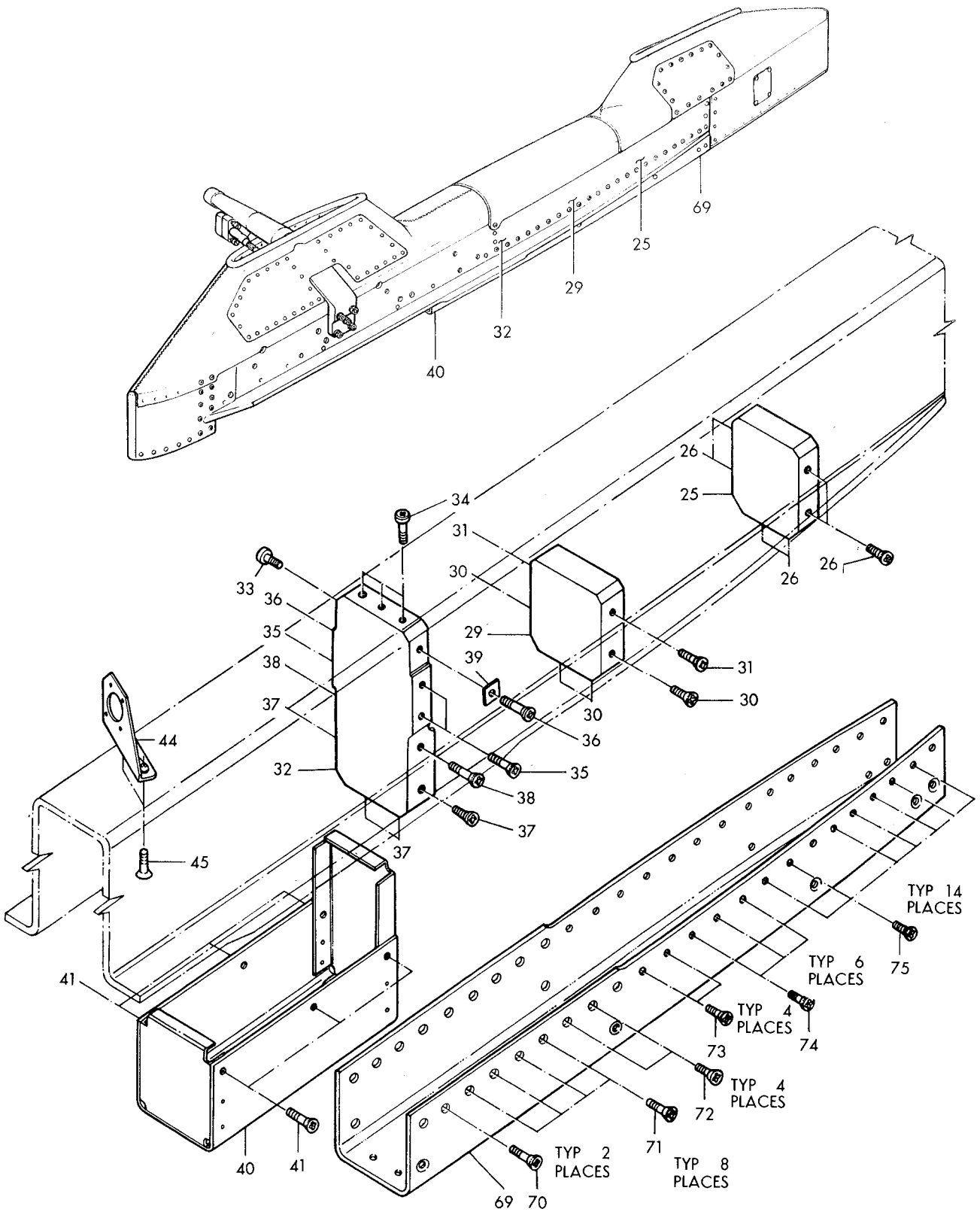

Figure 265-BL.22 Fuselage Pylon Conversion Kit (Sheet 2 of 3)

Loose Equipment

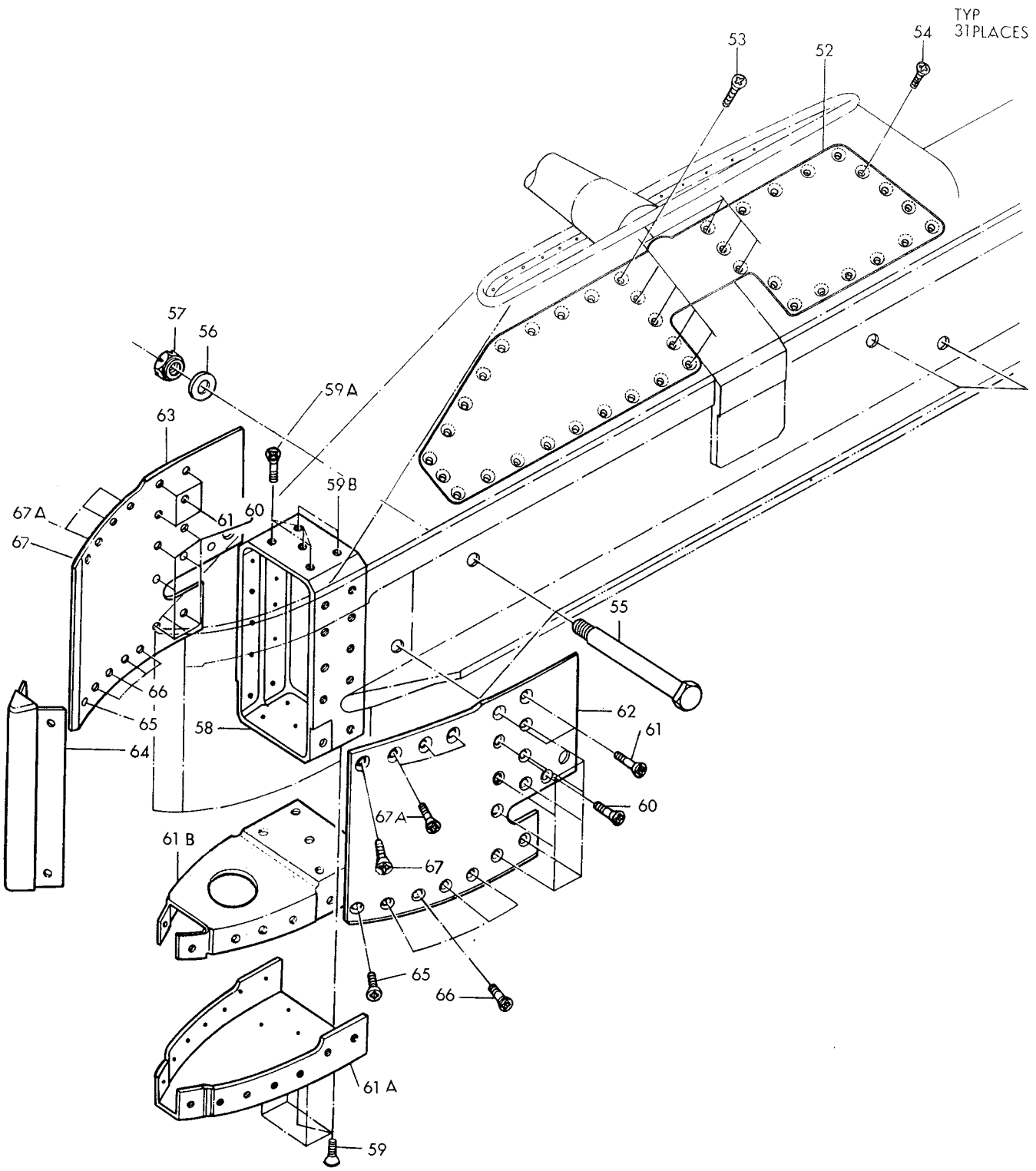

Figure 265–BL.22 Fuselage Pylon Conversion Kit (Sheet 3 of 3)

Figura e particolare	NDR	1 2 3 4 5 6 7 DENOMINAZIONE	Quant.	Codice applicab.
265-44	849313-101	ANGLE ASSY, BL22 rack connector pylon	1	
		Attaching Parts		
-45	NAS1203-5	SCREW (80205)	2	
		*		
-46	849312-101	FITTING ASSY, BL22 pylon support (LH)	1	
	849312-102	FITTING ASSY, BL22 pylon support (RH)	1	
		Attaching Parts		
-47	NAS1204-5	SCREW (80205)	2	
-47A	851938-115	SHIM	AR	
-48	NAS1155-7	BOLT (80205)	6	
-49	NAS1155-8	BOLT (80205)	4	
-50	MS21043-5	NUT (96906)	10	
-51	MS21042L4	NUT (96906)	2	
		*		
-51A	851933-101	FAIRING, fuselage pylon nose (LH)	1	
	851933-102	FAIRING, fuselage pylon nose (RH)	1	
-52	851934-101	DOOR, fuselage pylon nose fairing (LH)	1	
	851934-102	DOOR, fuselage pylon nose fairing (RH)	1	
		Attaching Parts		
-53	NAS1203-3	SCREW (80205)	8	
-54	NAS1203-2	SCREW (80205)	31	
		*		
-55	728707-101	BOLT, BL22 pylon retainer rack	4	
-56	AN960-816	WASHER (88044)	4	
-57	AN320-8	NUT (88044)	4	
	MS24665-285	COTTER PIN (96906)	4	
-58	849317-101	BULKHEAD ASSY, fuselage pylon nose	1	
		Attaching parts		
-59	NAS1204-3	SCREW (80205)	5	
-59A	NAS1670-4K8	FASTENER, Jo-Bolt (80205)	3	
-59B	NAS1670-4K9	FASTENER, Jo-Bolt (80205)	2	
-60	NAS1204-5	SCREW (80205)	14	
-61	NAS1670-4K7	FASTENER, Jo-Bolt (80205)	6	
		*		
-61A	849323-101	RIB ASSY, fuselage pylon	1	
-61B	852165-101	RIB ASSY, fuselage pylon	1	
-62	849325-105	SKIN, BL22 Fuselage pylon nose (LH)	1	
	849325-106	SKIN, BL22 fuselage pylon nose (RH)	1	
-63	849325-107	SKIN, BL22 fuselage pylon nose (LH)	1	
	849325-108	SKIN, BL22 fuselage pylon nose (RH)	1	
-64	849330-103	LEADING EDGE, BL22 fuselage pylon	1	
		Attaching Parts		
-65	NAS1203-3	SCREW (80205)	2	
-66	NAS1203-4	SCREW (80205)	8	
-67	NAS1670-3K6	FASTENER, Jo-Bolt (80205)	2	
-67A	NAS1670-3K3	FASTENER, Jo-Bolt (80205)	6	
		*		
	850479-101	ELECTRICAL INSTL, BL22 pylon (LH) *(see fig. 266)*	1	
	850479-103	ELECTRICAL INSTL, BL22 pylon (RH) *(see fig. 266)*	1	
-68	MS27253-2	PLATE (96906)	1	
-69	849328-101	RIB, BL22 fuselage pylon	1	
		Attaching Parts		
-70	NAS1204-6	SCREW (80205)	2	
-71	NAS1204-5	SCREW (80205)	8	
-72	NAS1204-4	SCREW (80205)	4	
-73	NAS1203-4	SCREW (80205)	4	
-74	NAS1203-3	SCREW (80205)	6	
-75	NAS1203-2	SCREW (80205)	14	
		*		

Figura e particolare	NDR	DENOMINAZIONE 1 2 3 4 5 6 7	Quant.	Codice applicab.
		BL22 PYLON ELECTRICAL		
266	850479-101	ELECTRICAL INSTL, BL22 pylon (LH) *(see fig. 265 for reqd)*	REF	
	850479-103	ELECTRICAL INSTL, BL22 pylon (RH) *(see fig. 265 for reqd)*	REF	
- 1	849770-101	HARNESS ASSY, BL22 pylon P-150 disc. (LH)	1	6701-6765
	851911-101	HARNESS ASSY, BL22 pylon P-150 disc. (LH)	1	6766-
- 2	EMRA20PM1A106	CONNECTOR, (P160) plug (P-150 disc.) (81312)	1	
- 3	849773-103	HARNESS ASSY, BL22 pylon P-151 disc. (RH)	1	6701-6765
	851913-101	HARNESS ASSY, BL22 pylon P-151 disc. (RH)	1	6766-
- 4	EMRA20PM1A106	CONNECTOR, (P160) plug (P-151 disc.) (81312)	1	
- 5	849771-101	HARNESS ASSY, BL22 pylon rectifier assy (LH)	1	6701-6765
	851912-101	HARNESS ASSY, BL22 pylon rectifier assy (LH)	1	6766-
- 6	849774-101	HARNESS ASSY, BL22 pylon rectifier assy (RH)	1	6701-6765
	851914-101	HARNESS ASSY, BL22 pylon rectifier assy (RH)	1	6766-
- 7	774305-1	RECTIFIER ASSY, (CR7) tip tank jettison	1	
		Attaching Parts		
- 8	NAS514P1032-8	SCREW (80205)	2	
		*		
- 9	849772-101	HARNESS ASSY, BL22 pylon bottom connector (LH)	1	
-10	849775-101	HARNESS ASSY, BL22 pylon bottom connector (RH)	1	
-11	EMRA20SF2A116	CONNECTOR, (J34) recp (AIM-9B adapter) (81312)	1	
-12	MS3110P20-16S	CONNECTOR, (J250) recp (MAU-50A rack) (96906)	1	
		Attaching Parts		
-13	NAS600-6	SCREW (80205)	6	
-14	MS21042L04	NUT (96906)	4	
		*		
-15	NAS1096-3-12	SCREW (grd stud) (80205)	2	
	AN936A10	WASHER (grd stud) (88044)	2	
	MS35337-43	WASHER (grd stud) (96906)	2	
	AN345-10	NUT (grd stud) (88044)	2	
	AN960-10	WASHER (grd stud) (88044)	2	
	MS21042L3	NUT (grd stud) (96906)	2	

Loose Equipment

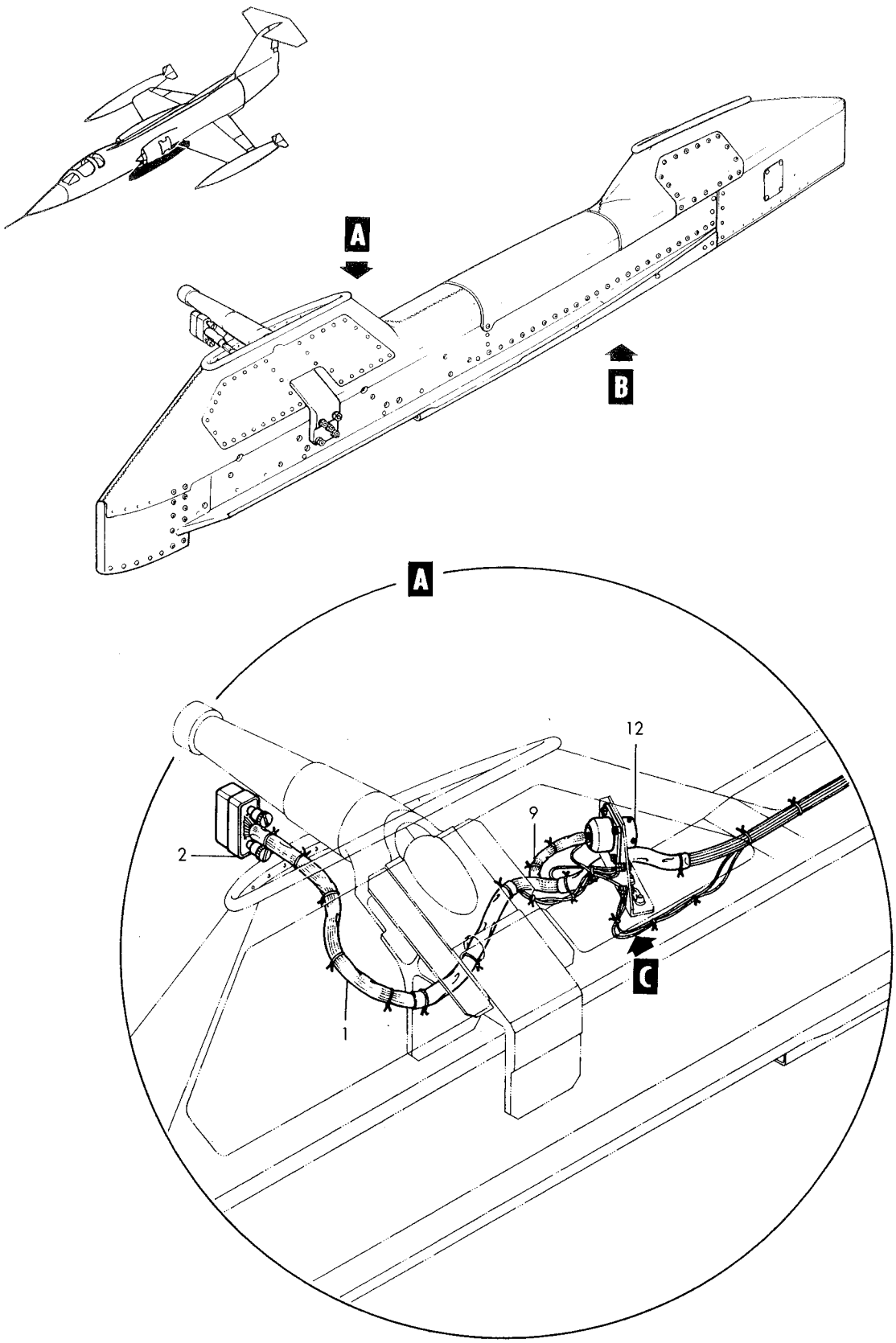

Figure 266–BL.22 Pylon Electrical (Sheet 1 of 3)

Loose Equipment

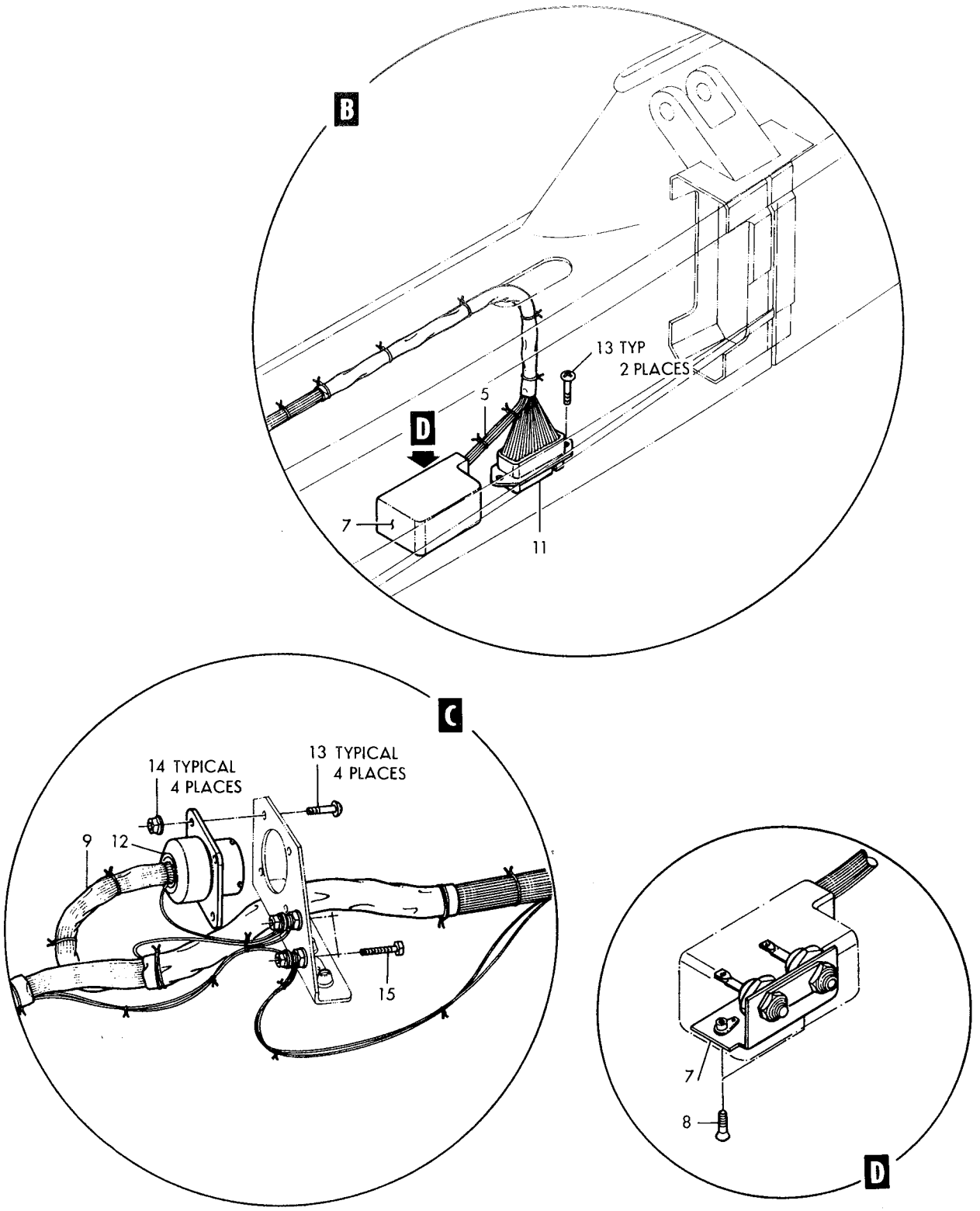

Figure 266–BL.22 Pylon Electrical (Sheet 2 of 3)

Loose Equipment

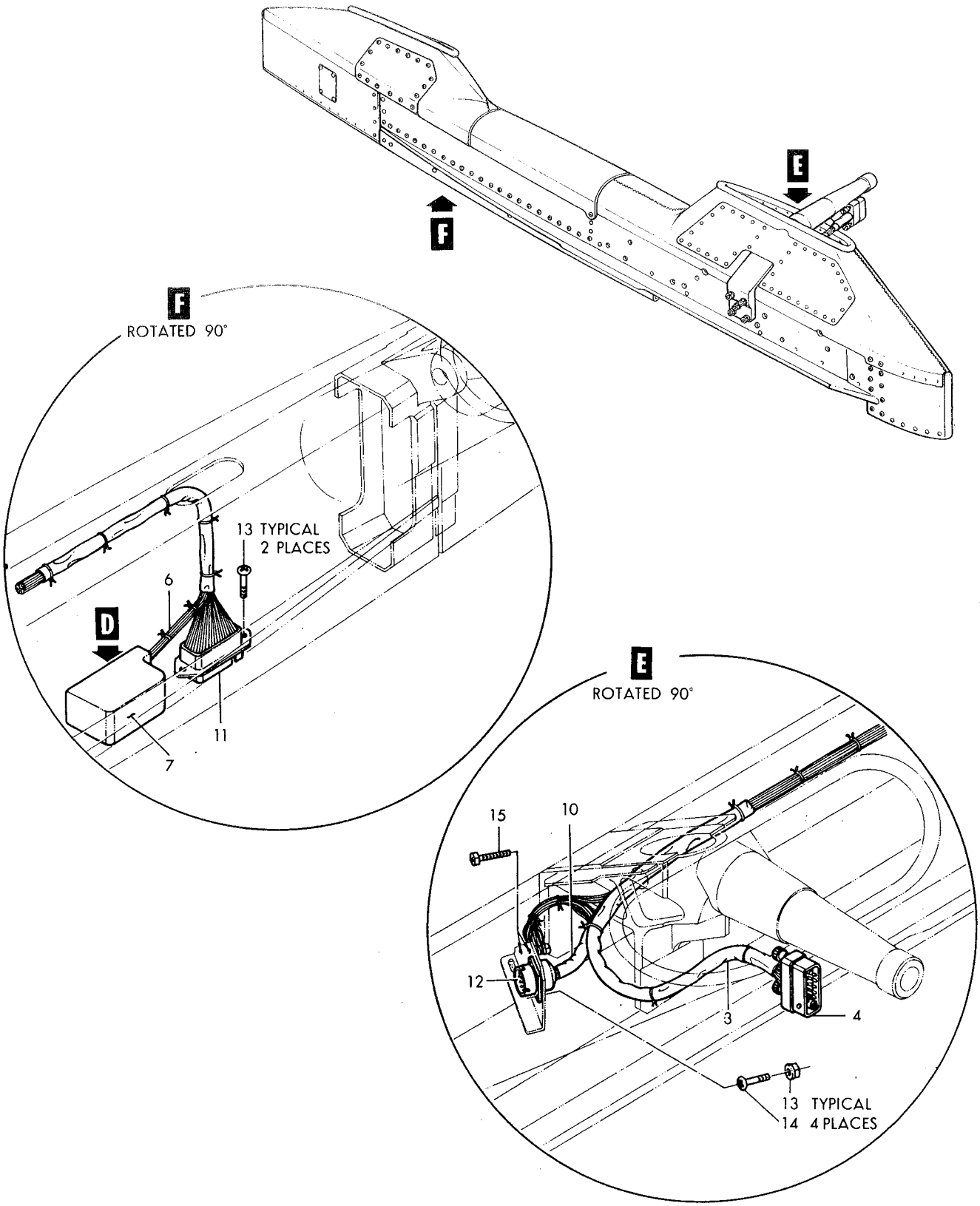

Figure 266–BL.22 Pylon Electrical (Sheet 3 of 3)

Figura e particolare	NDR	1 2 3 4 5 6 7 DENOMINAZIONE	Quant.	Codice applicab.
		BL104 PYLON AIM-9/B CONVERSION KIT		
267	850909-101	A. CONVERSION KIT, BL104 pylon AIM9/B instl *(see fig. 260 for reqd)*	REF	
- 1	850480-101	B. . ADAPTER ASSY, AIM-9/B pylon (LH)	1	
	850480-102	B. . ADAPTER ASSY, AIM-9/B pylon (RH)	1	
- 2	850494-101	A. . . TAIL ASSY, AIM-9/B pylon adapter (LH)	1	
	850494-102	A. . . TAIL ASSY, AIM-9/B pylon adapter (RH)	1	
- 3	850498-101	A. . . . CHANNEL, tail AIM-9/B adapter	1	
- 4	NAS1203-1	A. . . . SCREW (80205)	4	
- 5	850495-101	A. . . . HOUSING, tail AIM-9/B adapter	1	
		Attaching Parts		
- 6	NAS1203-3	A. . . SCREW (80205) (LH only)	4	
		———— * ————		
- 7	850480-103	A. . . COVER, AIM-9/B pylon adapter	1	
		Attaching Parts		
- 8	NAS1203-1	A. . . SCREW (80205)	1	
- 9	NAS1203-3	A. . . SCREW (80205)	1	
		———— * ————		
	767262-101	A. . . COVER INSTL, wing tip electrical plug	1	
-10	767262-103	A. . . . COVER, wing tip electrical plug	1	
-11	NAS583-2	A. . . . SCREW (80205)	2	
-12	850493-101	A. . . CHANNEL, pylon AIM-9/B adapter	1	
		Attaching Parts		
-13	NAS1203-2	A. . . SCREW (80205)	16	
-14	NAS1203-3	A. . . SCREW (80205)	5	
		———— * ————		
	850488-101	A. . . MIDDLE BEAM ASSY, pylon AIM-9/B adapter	1	
-15	850488-103	A. . . . MIDDLE BEAM, pylon AIM-9/B adapter	1	
		Attaching Parts		
-16	NAS1203-4	A. . . . SCREW (80205)	24	
-17	NAS1203-3	A. . . . SCREW (80205)	22	
-18	NAS1203-2	A. . . . SCREW (80205)	30	
-19	NAS623-4-3	A. . . . SCREW (80205)	2	
-20	AN960-416L	A. . . . WASHER (88044)	2	
		———— * ————		
	785635-1	A. . . . EJECTOR ASSY, fus sidewinder pylon mid beam	1	
-21	785633-1	A. . . . . HOUSING, fus sidewinder pylon mid beam ejector	1	
-22	S20006-36	A. . . . . BOLT (96906)	1	
-23	M28472-1	A. . . . . WASHER	1	
-24	7AN960-616	A. . . . . WASHER (88044)	2	
-25	D21	A. . . . . SPRING (71447)	1	
-26	D89	A. . . . . SPRING (71447)	1	
-27	AN960-616L	A. . . . . WASHER (88044)	1	
-28	MS21042L6	A. . . . . NUT (96906)	1	
-29	850492-101	A. . . . FITTING, mid beam AIM-9/B adapter	1	
-30	850489-101	A. . . . CHANNEL, upper mid beam AIM-9/B adapter	1	
-31	785619-1	A. . . . FITTING ASSY, fus sidewinder pylon mid beam shear pin	1	
-32	785658-1	A. . . . . BUSHING, fus sidewinder pylon mid beam shear pin	1	
-33	850482-101	A. . . YOKE, aft pylon AIM-9/B adapter (LH)	1	
	850482-102	A. . . YOKE, aft pylon AIM-9/B adapter (RH)	1	
		Attaching Parts		
-34	NAS1203-3	A. . . SCREW (80205)	22	
-35	NAS1203-4	A. . . SCREW (80205)	4	
-36	NAS1203-2	A. . . SCREW (80205)	2	
		———— * ————		
-37	850998-101	A. . . PLATE, pylon AIM-9/B adapter	1	
		Attaching Parts		
-38	NAS1203-4	A. . . SCREW (80205)	4	
-39	NAS623-3-6	A. . . SCREW (80205)	2	
		———— * ————		
-40	850501-101	A. . . BRACKET, pylon safety switch AIM-9/B adapter	1	
-41	MS25011-1	A. . . SWITCH, (S59) (safety switch) (96906)	1	

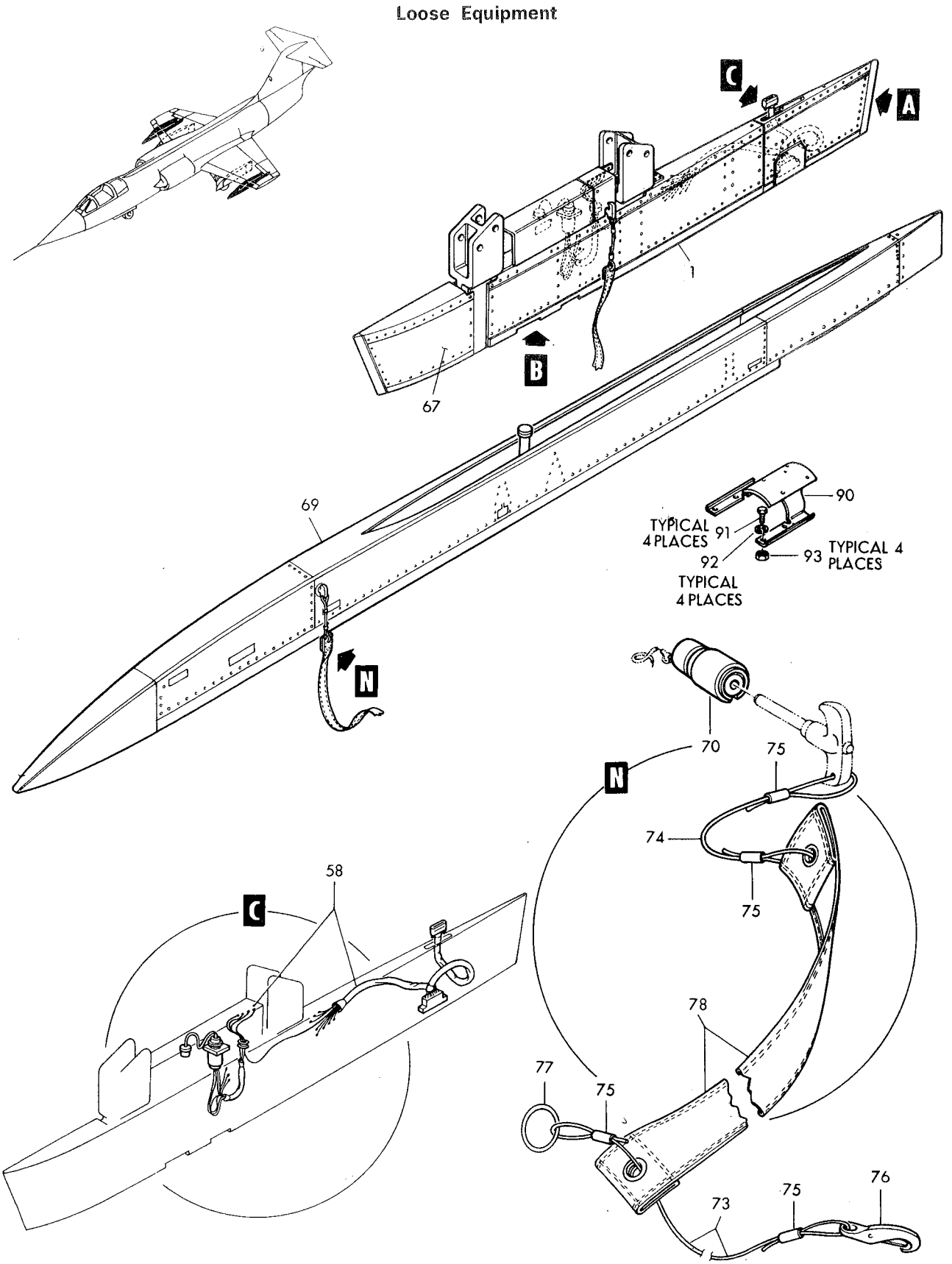

Figure 267–BL.104 AIM–9/B Conversion Kit (Sheet 1 of 3)

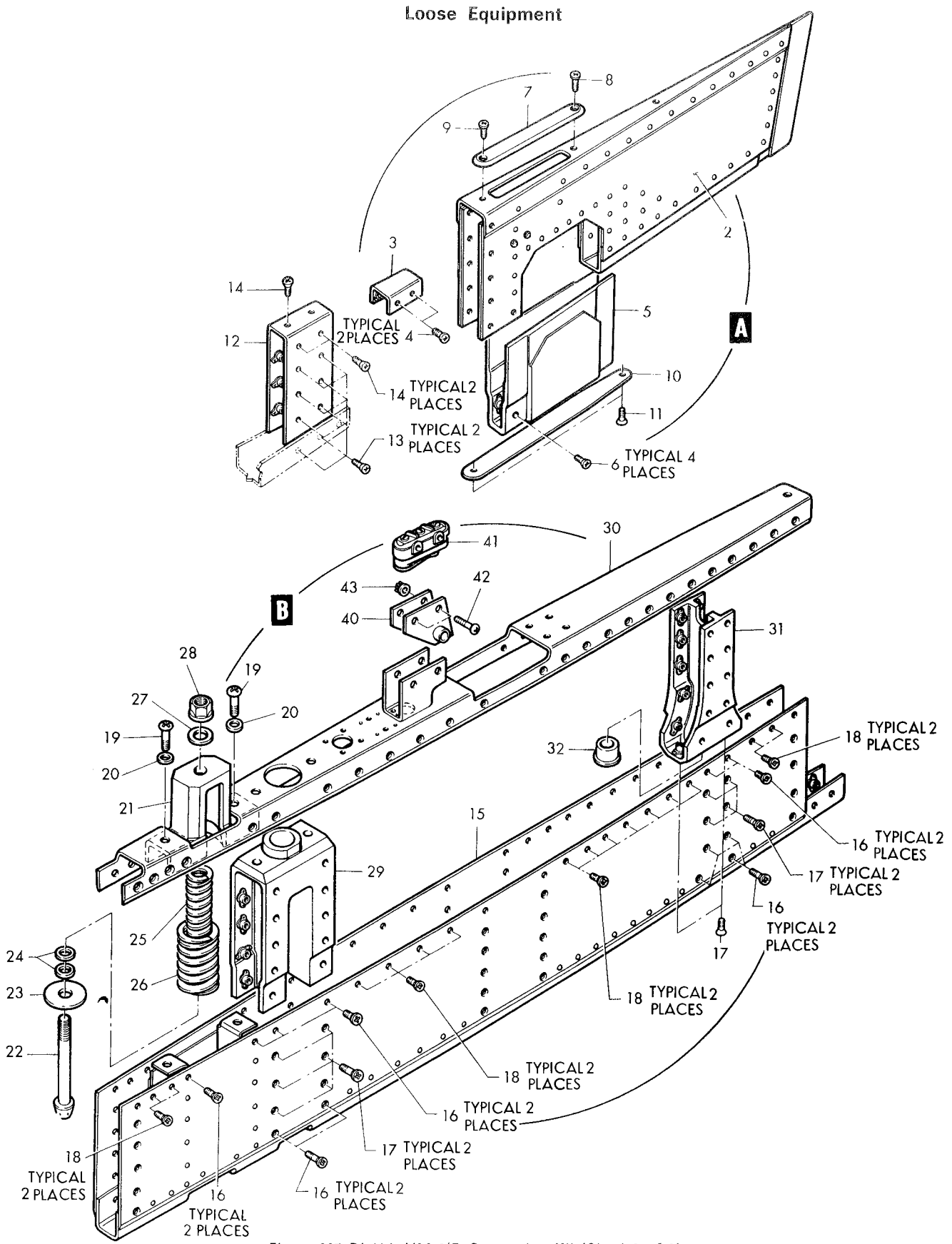

Figure 267-BL.104 AIM-9/B Conversion Kit (Sheet 2 of 3)

Loose Equipment

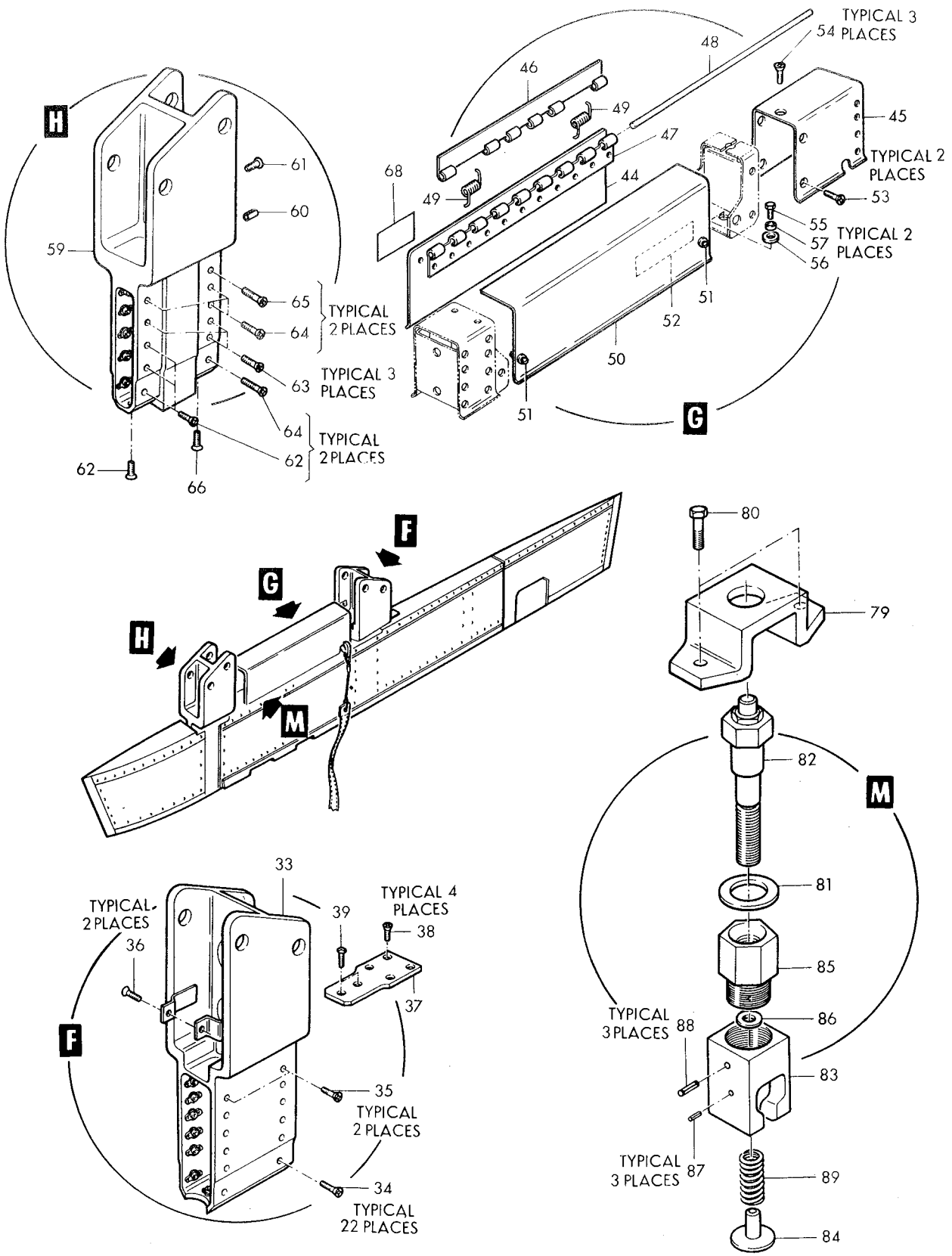

Figure 267–BL.104 AIM–9/B Conversion Kit (Sheet 3 of 3)

Figura e particolare	NDR	1	2	3	4	5	6	7	DENOMINAZIONE	Quant.	Codice applicab.
									Attaching Parts		
267-42	AN515B6R16	A.	.	.					SCREW (80205)	2	
-43	MS21042L06	A.	.	.					NUT (96906)	2	
									*		
	850483-101	A.	.	.					COVER ASSY, pylon AIM-9/B adapter (LH)	1	
	850483-102	A.	.	.					COVER ASSY, pylon AIM-9/B adapter (RH)	1	
-44	850483-115	A.	.	.	.				COVER, pylon AIM-9/B adapter	1	
	850484-101	A.	.	.	.				SKIN ASSY, cover AIM-9/B adapter	1	
-45	850484-103	A.	.	.	.	.			SKIM, cover AIM-9/B adapter	1	
-46	850484-105	A.	.	.	.	.			HALFHINGE, cover AIM-9/B adapter skin	1	
-47	850484-107	A.	.	.	.	.			HALFHINGE, cover AIM-9/B adapter skin	1	
-48	850484-109	A.	.	.	.	.			PIN, cover AIM-9/B adapter skin	1	
-49	768061-1	A.	.	.	.	.			SPRING, cover AIM-9/B adapter skin	2	
	850485-101	A.	.	.	.				DOOR ASSY, cover AIM-9/B adapter	1	
-50	850485-103	A.	.	.	.	.			DOOR, cover AIM-9/B adapter	1	
-51	2700-3	A.	.	.	.	.			STUD, camloc fastener (71286)	2	
-52	785645-1	A.	.	.	.				DECAL, cover fus sidewinder pylon	1	
	212-12	A.	.	.	.				RECEPTACLE, camloc fastener (71286)	2	
	26R8-2	C.	.	.	.				SHIM (71286)	2	
-53	NAS514P1032-6	A.	.	.	.				SCREW (80205)	2	
-54	NAS514P1032-8	A.	.	.	.				SCREW (80205)	3	
-55	AN17345A	A.	.	.					BOLT (88044)	2	
-56	AN960-10L	A.	.	.					WASHER (88044)	2	
-57	NAS43DD3-8	A.	.	.					SPACER (80205)	2	
-58	850305-101	A.	.	.					ELECTRICAL INSTL, AIM-9/B adapter (LH) *(see fig. 268)*	1	
	850305-102	A.	.	.					ELECTRICAL INSTL, AIM-9/B adapter (RH) *(see fig. 268)*	1	
-59	850481-101	A.	.	.					YOKE, fwd pylon AIM-9/B adapter (LH)	1	
	850481-102	A.	.	.					YOKE, fwd pylon AIM-9/B adapter (RH)	1	
-60	MS16562-46	A.	.	.	.				PIN (96906)	1	
									Attaching Parts		
-61	AN520B10R6	A.	.	.					SCREW (88044)	1	
-62	NAS1203-2	A.	.	.					SCREW (80205)	7	
-63	NAS1203-3	A.	.	.					SCREW (80205)	6	
-64	NAS1203-4	A.	.	.					SCREW (80205)	8	
-65	NAS1203-5	A.	.	.					SCREW (80205)	2	
-66	NAS1204-3	A.	.	.					SCREW (80205)	1	
									*		
-67	850486-101	A.	.	.					NOSE, pylon AIM-9/B adapter (LH)	1	
	850486-102	A.	.	.					NOSE, pylon AIM-9/B adapter (RH)	1	
-68	MS27253-2	A.	.	.					PLATE (96906)	1	
-69	785315-105	D.	.						LAUNCHER ASSY (sidewinder) (LH) (see LR11-14404-115-4)	1	
	785315-106	D.	.						LAUNCHER ASSY (sidewinder) (RH) (see LR11-14404-115-4) (see fig. 260)	1	
	DP38395	D.	.	.					CONNECTOR, (P125) plug (71468)	1	
	795798-1	A.	.						HARNESS ASSY, HVAR firing (RH) (only for HVAR)	1	
-70	MS25183-22-14S	A.	.	.					CONNECTOR, plug (96906)	1	
	785654-1	A.	.						SAFETY PIN ASSY, fus sidewinder pylon elec switch	4	
-73	785654-3	A.	.	.					CABLE, fus sidewinder pylon elec switch	1	
-74	785654-5	A.	.	.					CABLE, fus sidewinder pylon elec switch	1	
-75	18-1C	A.	.	.					SLEEVE, cable oval (76691)	4	
-76	341-3-8	A.	.	.					SNAP, round eye (76786)	1	
-77	18 3-4	A.	.	.					RING, hollow brass curtain (75005)	1	
-78	NAS1089-24	A.	.	.					STREAMER (80205)	1	
	MS20230GB10	A.	.	.					GROMMET (96906)	1	
	MS20230WB10	A.	.	.					WASHER (96906)	1	
-79	850908-101	A.	.						RETAINER, pylon AIM-9/B instl bolt	2	
-80	AN175H10	A.	.						BOLT (88044)	4	
-81	MS20002C14	A.	.						WASHER (96906)	2	
-82	3220-1	A.	.						EXPLOSIVE BOLT (06331)	2	
	850906-101	A.	.						LATCH ASSY, pylon AIM-9/B instl.	2	
-83	785639-1	A.	.	.					LATCH BLOCK, fus pylon	1	

Figura e particolare	NDR	1	2	3	4	5	6	7	DENOMINAZIONE	Quant.	Codice applicab.
267-84	785640-1	A.	.	.	WASHER, fus pylon					1	
-85	850907-101	A.	.	.	BUSHING ASSY					1	
-86	LS881-6	A.	.	.	WASHER (36659)					1	
-87	MS16562-2	A.	.	.	PIN (96906)					3	
-88	MS16562-31	A.	.	.	PIN (96906)					3	
-89	29	A.	.	.	SPRING (71447)					1	
-90	795790-1	A.	.		BRACKET ASSY, weapons away actuator (RH) (only for HVAR)					1	
-91	NAS428-5-10	A.	.		BOLT (80205) (RH) (only for HVAR)					4	
-92	MS35337-45	A.	.		LOCK WASHER (96906) (RH) (only for HVAR)					4	
-93	AN316-5R	A.	.		NUT (88044) (RH) (only for HVAR)					4	

A - Only for AWX
B - Only for AWX - Modified per AA.1F-104S-OT-126A
C - Only for AWX - Reqd per AA.1F-104S-OT-126A
D - Only for AWX - Modified per AA.21-AIM9B-OT-103A

Figura e particolare	NDR	1 2 3 4 5 6 7	DENOMINAZIONE	Quant.	Codice applicab.
			AIM-9B ADAPTER ELECTRICAL		
268	850305-101	A.	ELECTRICAL INSTL, AIM-9/B adapter (LH) *(see fig. 267 for reqd)*	REF	
	850305-102	A.	ELECTRICAL INSTL, AIM-9/B adapter (RH) *(see fig. 267 for reqd)*	REF	
- 1	849522-101	A.	. HARNESS ASSY, jettison bolt jumper	1	
- 2	PC06P8-4SW	A.	. . CONNECTOR, (P460) plug (jettison bolt) (77820)	1	
- 3	PC06P8-4P	A.	. . CONNECTOR, (P450) plug (safety sw) (77820)	1	
- 4	849546-101	A.	. HARNESS ASSY, AIM-9/B adapter	1	6701-6815
	852421-101	A.	. HARNESS ASSY, AIM-9/B adapter	1	6816-
- 5	EMRA20PM1A106	A.	. . CONNECTOR, (P160) plug (AIM-9/B top) (81312)	1	6701-6815
	852420-101	A.	. . CONNECTOR ASSY, (P160) plug (AIM-9/B top)	1	6816-
- 6	792422-1	A.	. . CONNECTOR, (J62) recp (AIM-9/B bottom)	1	
- 7	PC00P8-4S	A.	. . CONNECTOR, (J300) recp (jettison bolt jumper) (77820)	1	
			Attaching Parts		
- 8	NAS514P440-6	A.	. SCREW (80205)	4	
- 9	MS21042L04	A.	. NUT (96906)	4	
-10	NAS557-8C	A.	. GROMMET (80205)	1	
-11	850311-101	A.	. CHART, AIM-9/B adapter safety switch	1	
-12	LS7357WDT10	A.	. CLAMP (36659)	1	
-13	NAS514P1032-12	A.	. SCREW (grd stud) (80205)	2	
	MS35337-43	A.	. WASHER (grd stud) (96906)	2	
	AN345-10	A.	. NUT (grd stud) (88044)	2	
	AN960-10	A.	. WASHER (grd stud) (88044)	2	
	LS2816-4	A.	. WASHER (grd stud) (36659)	2	
	MS21042L3	A.	. NUT (grd stud) (96906)	2	

A - Only for AWX

Loose Equipment

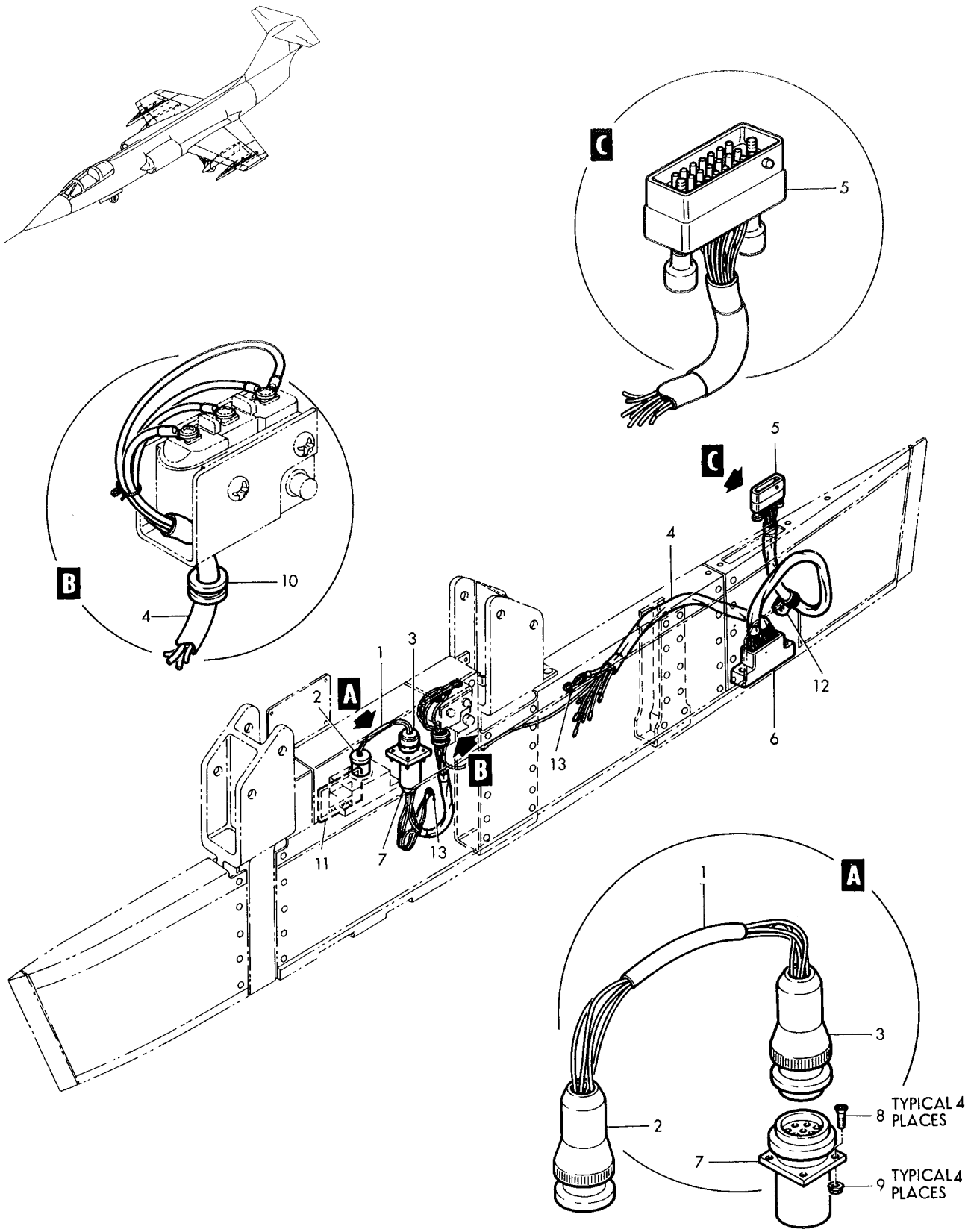

Figure 268–AIM-9/B Adapter Electrical

PAGINA IN BIANCO

SYSTEMS

Systems

INDEX	DESCRIPTION	FIGURE
1	LANDING GEAR EMERGENCY RELEASE HANDLE	85, 222
2	NOSE LANDING GEAR MANUAL RELEASE MECHANISM	86, 87
3	MAIN LANDING GEAR DOOR MANUAL RELEASES	88, 242
4	MAIN LANDING GEAR HYDRAULIC DUMP VALVES	121
5	RAM AIR TURBINE DOOR MANUAL RELEASE HANDLE	89, 222
6	RAM AIR TURBINE DOOR MANUAL RELEASE MECHANISM	50
7	DRAG CHUTE RELEASE HANDLE	90,91,92, 222
8	FS 335 PULLEY BRACKET ASSEMBLY	87, 91
9	FS 422 PULLEY BRACKET ASSEMBLY	87, 92
10	DRAG CHUTE RELEASE MECHANISM	256, 257
11	ENGINE EXHAUST NOZZLE RELEASE MECHANISM	95, 222

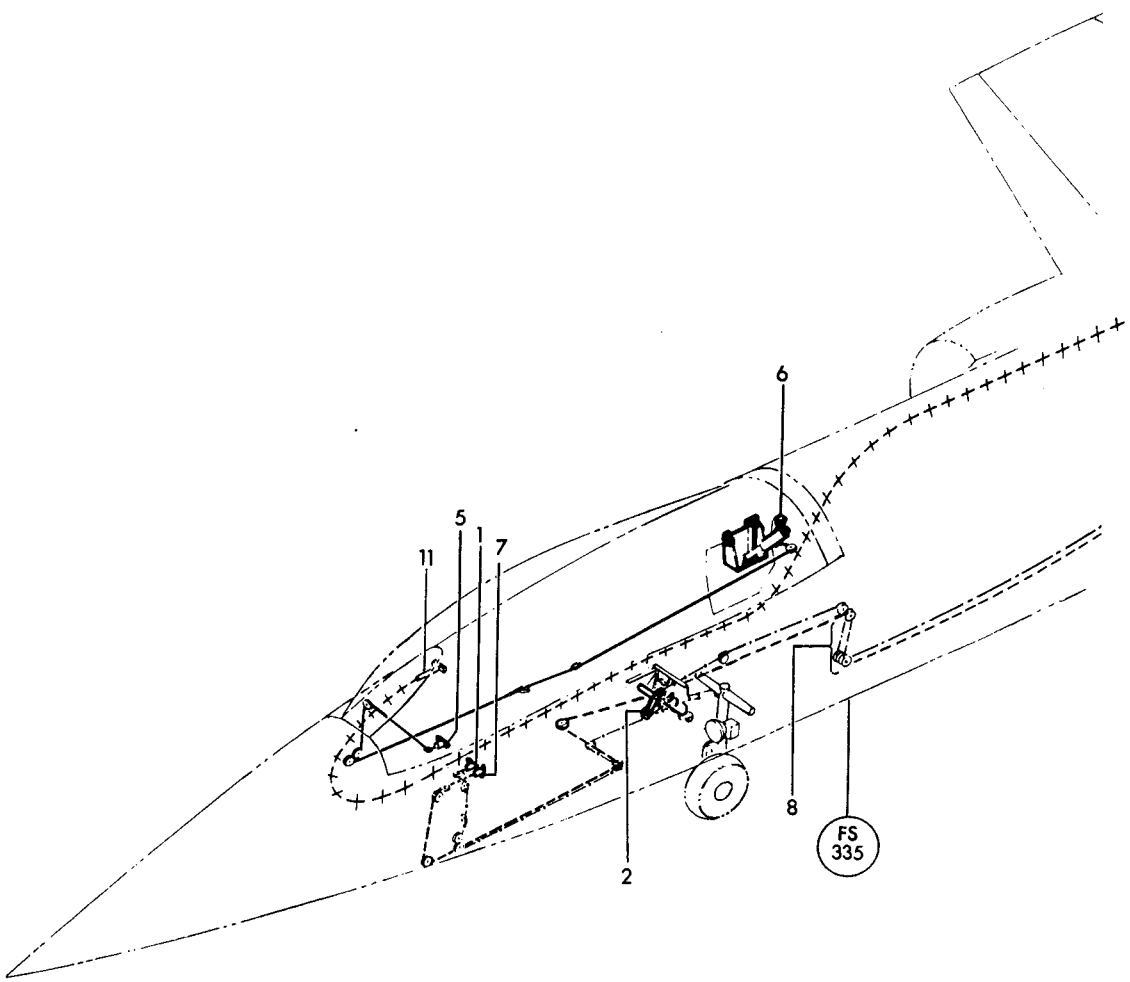

Figure 269—Manual Release Controls System (Sheet 1 of 2)

Systems

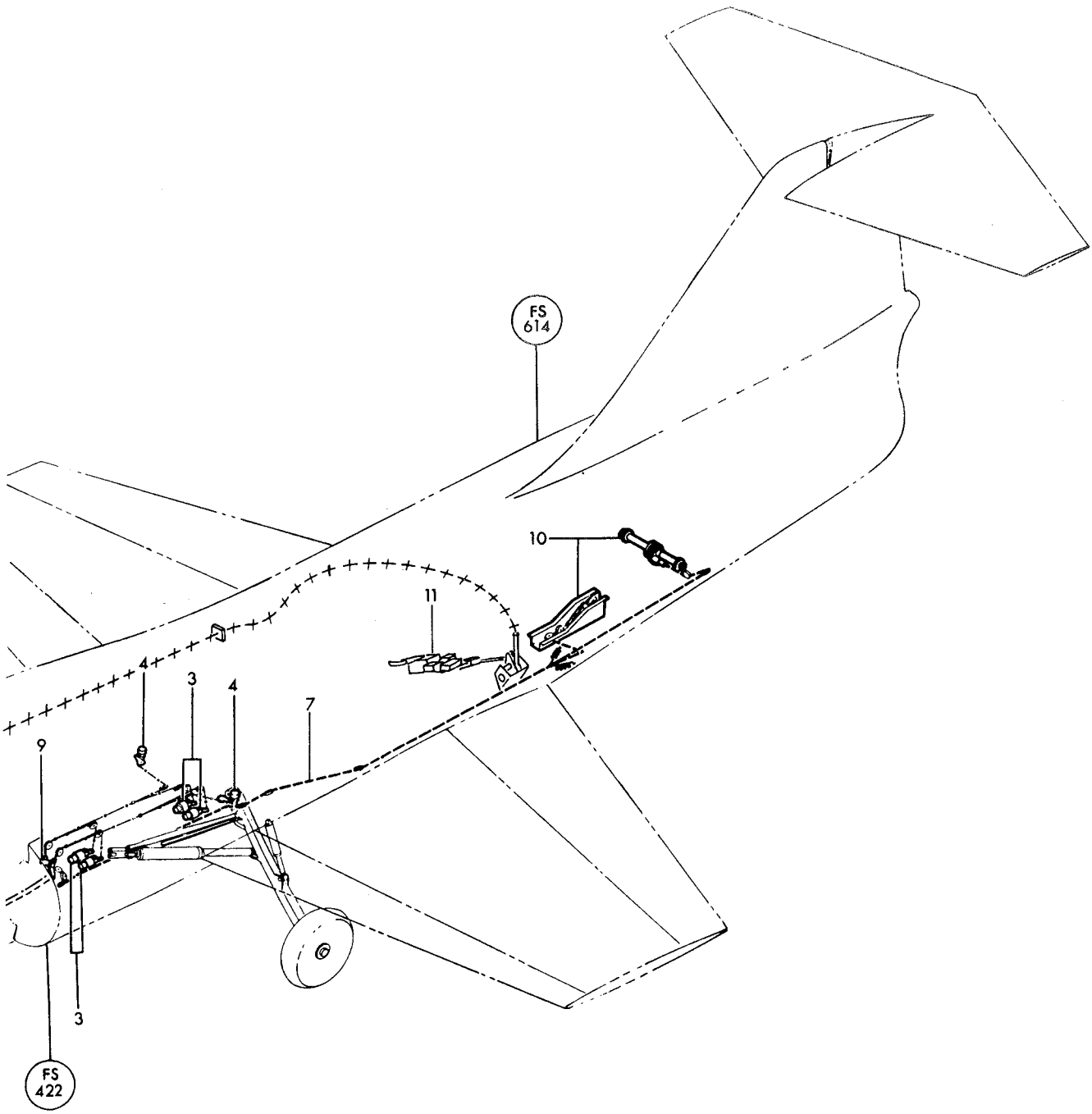

CABLE CODE

——— RAM AIR TURBINE MANUAL RELEASE
—·—·—·— MAIN, NOSE LANDING GEAR MANUAL RELEASE
- - - - - - - - DRAG CHUTE RELEASE
+ + + + + ENGINE EXHAUST NOZZLE MANUAL RELEASE

Figure 269—Manual Release Controls System (Sheet 2 of 2)

Systems

INDEX	DESCRIPTION	FIGURE
1	FUEL TANK CAP	96
2	PRESSURE FUEL SERVICING CAP & ADAPTER	96
3	FUELING PRESSURE FLOW LIMITER	96
4	FLANGE MOUNTED LIQUID QUANTITY FUEL TRANSMITTER	97
5	AMMO COMPT FUEL TANK	97
6	AMMO COMPT FUEL TANK MANHOLE COVER	97
7	CASE STOWAGE COMPT FUEL TANK	98
8	FLANGE MOUNTED LIQUID QUANTITY FUEL TRANSMITTER	98
9	GUN BAY FUEL TANK INTERCONNECTOR	98
10	AFT GUN BAY FUEL TANK INTERCONNECTOR	98
11	GUN BAY FUEL TANK	99
12	GUN BAY & AFT AUX FUEL TANK ACCESS HOLE COVERS	99
13	LIQUID QUANTITY FUEL GUN BAY TANK FWD & AFT TRANSMITTERS	99
14	FUEL CHECK VALVE	100
15	AUX FUEL TANK COVER	100
16	FUEL TRANSFER CENTRIFUGAL PUMP	100
17	LIQUID LEVEL FLOAT ACTUATED SWITCH	100
18	FUS AUX FUEL TANK	100
19	FUEL FLOAT VALVE	100
20	FUEL LEVEL CONTROL VALVE	100
21	AUX FUEL TANK LIQUID QUANTITY TRANSMITTER	100
22	FUEL PRESSURE SWITCH	102
23	LIQUID LEVEL FLOAT ACTUATED SWITCH	102
24	AFT MAIN FUEL PUMP	102
25	FWD MAIN FUEL TANK	102
26	FUEL FLOAT VALVE	102
27	FUEL LEVEL CONTROL FLOAT VALVE	103
28	FWD MAIN FUEL PUMP	102
29	FUEL CHECK PLATE VALVE	102
30	FWD MAIN FUEL TRANSMITTER	102, 103
31	FWD MAIN FUEL TANK MANHOLE COVER	102, 103
32	FUEL LEVEL CONTROL FLOAT VALVE	103
33	FUEL TANK CAP	105
34	PRESSURE FUELING LEVEL CONTROL VALVE	106
35	FUEL TANK VENT FLOAT VALVE	105

INDEX	DESCRIPTION	FIGURE
36	FUEL QTY TRANSMITTER	106
37	AFT TANK MANHOLE COVER	106
38	MAIN AFT LEFT AND RIGHT HAND TANK ASSY	105
39	DROP TANK AIR PRESSURE REGULATOR	113
40	SAFETY RELIEF VALVE ASSEMBLY	109
41	FUEL SHUTOFF SOLENOID VALVE	110
42	PRESSURE REGULATOR SNIFFLE VALVE	111
43	ALT CLOSING RELIEF VALVE	111
44	FUEL CHECK VALVE	111
45	FUEL CHECK VALVE	111
46	FUEL CHECK VALVE	111
47	FUEL SHUTOFF VALVE	112
48	AIRCRAFT FUEL SYSTEM STRAINER	112
49	DRAIN VALVE ASSY	112
50	DUAL AIR PRESSURE REGULATOR	113
51	ELEC OPERATED AIR SHUTOFF VALVE	113
52	SOLENOID AIR SHUTOFF VALVE	113
53	CAP AND CHAIN	113
54	HOT AIR CHECK VALVE	113
55	LIQUID QUANTITY FUEL INDICATOR	222
56	LIQUID QUANTITY FUEL DUAL INDICATOR	222
57	RATE OF FLOW INDICATOR	220
58	PYLON FUEL TRANSFER MANIFOLD ASSY	10
59	TIP TANK ASSY	260

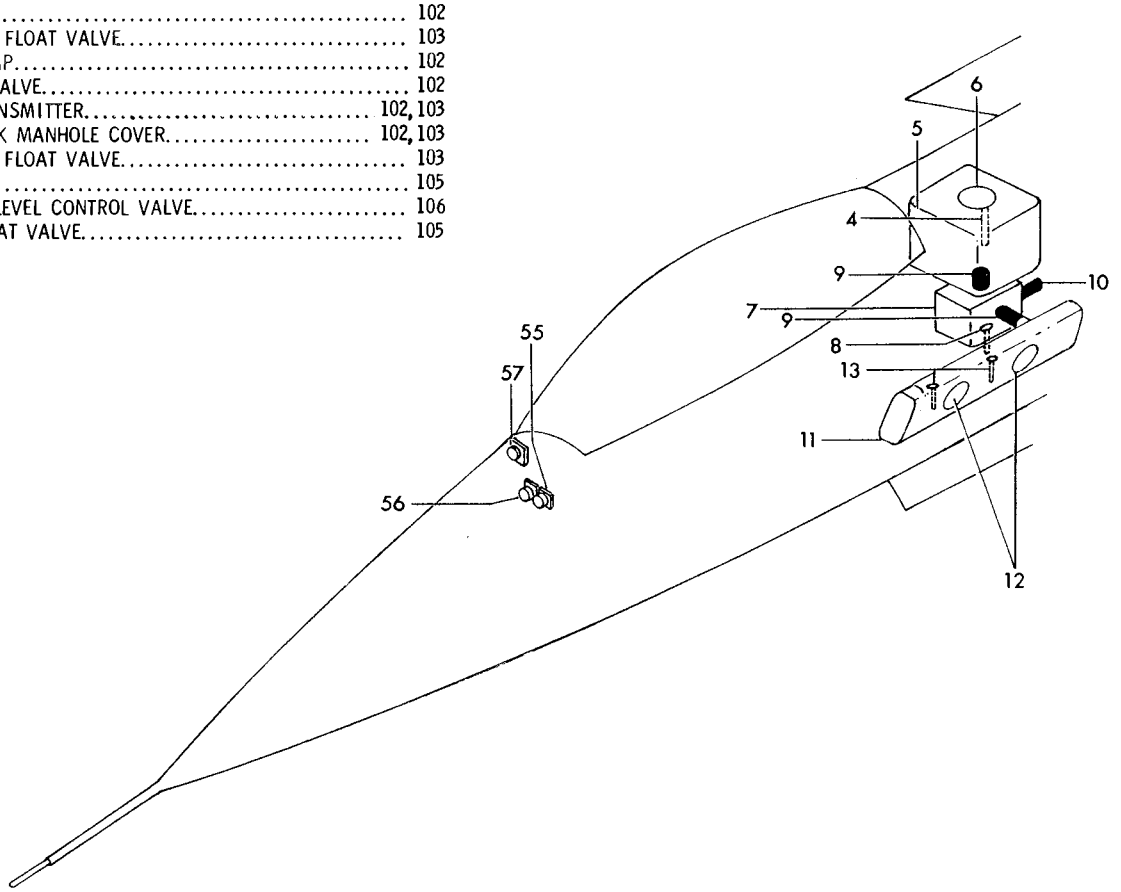

Figure 270—Fuel System (Sheet 1 of 2)

Systems

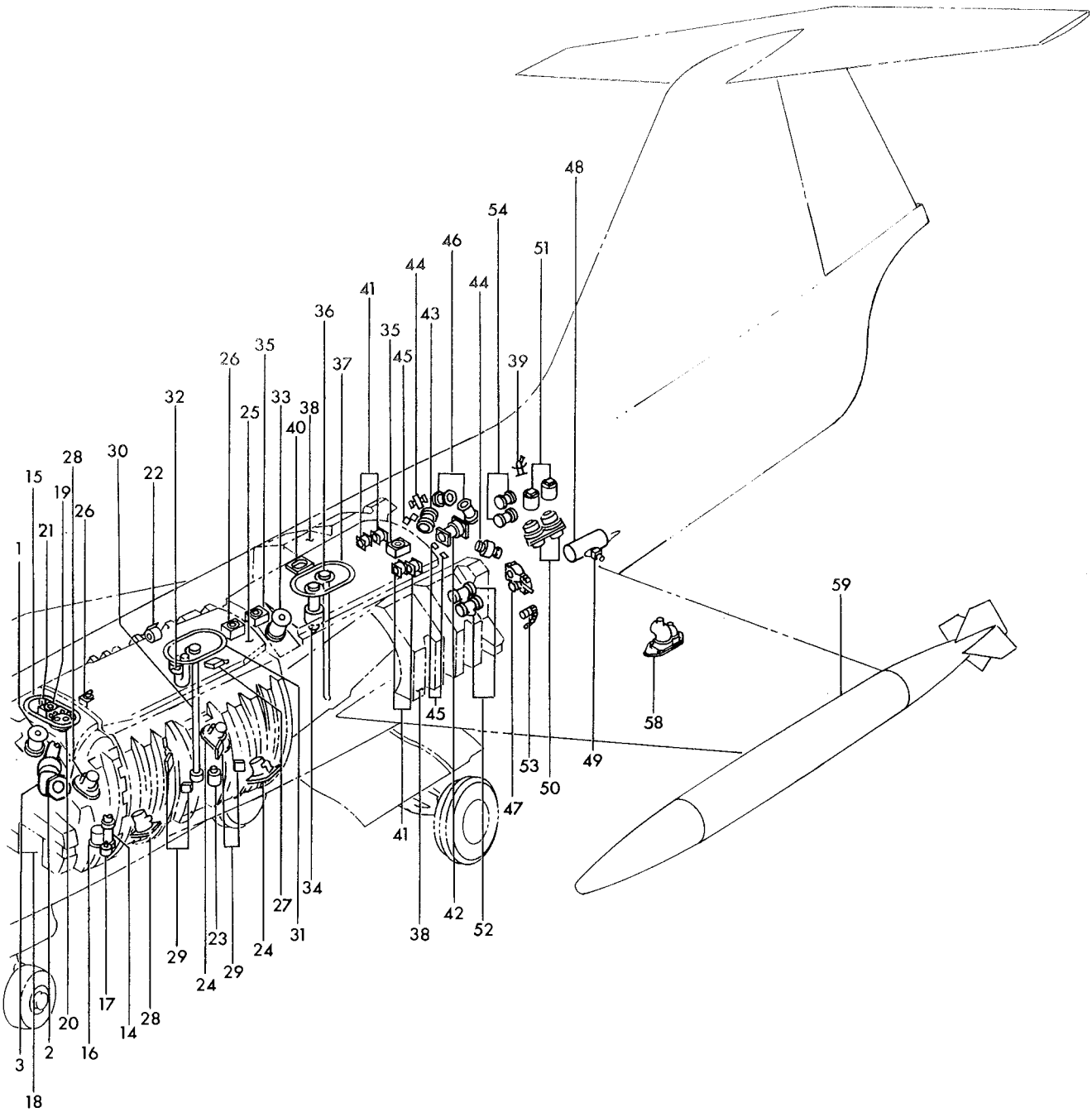

Figure 270—Fuel System (Sheet 2 of 2)

Systems

INDEX	DESCRIPTION	FIGURE
1	HYD BRAKE MANUAL SYS RESERVOIR	115
2	POWER OR MANUAL OPERATING BRAKE VALVE	64, 115
3	HYD PRESS. INDICATORS	222
4	ANTI-SKID BRAKE HYD SHUTOFF SOLENOID VALVE	116
5	HYD LIQUID PRESS. 3GPM FILTER	116
6	HYD PRESS. REDUCER VALVE	116
7	HYD SHUTOFF VALVE	116
8	NLG UPLOCK CYLINDER ASSY	116, 232
9	NLG STEERING DAMPER ASSY	116, 232, 236
10	NLG ACTUATING CYLINDER ASSY	116, 232
11	RAM AIR TURBINE AUXILIARY SET	50, 127
12	ANTI-SKID BRAKE CONTROL VALVES	118, 120
13	MLG FWD DOOR CYLINDER ASSY	118, 120, 241
14	MLG DOOR LH & RH LATCH ASSY	118, 119, 120, 242
15	MLG DRAG STRUT CYLINDER ASSY	118, 120, 238
16	MLG HYD SELECTOR SOLENOID VALVE	119, 121
17	MLG HYD DUMP VALVE	121
20	OIL TO FUEL HYD SYS HEAT EXCHANGER	112, 122
21	HYD MOTOR DRIVEN ALTERNATOR	122
22	HYD SYSTEM NO. 1 RESERVOIR	122, 127
23	HYD SYSTEM NO. 2 RESERVOIR	123
24	C/W ELEMENT FILTER ASSY	123, 124
25	AUTOPILOT SERVO AILERON ACTUATOR ASSY	73, 123
26	HYD SHUT-OFF SOLENOID OPERATED VALVE	124
27	ENGINE AIR BY-PASS VALVE ACTUATORS	125
28	HYD SOLENOID VALVE	125
29	HYD SPEED BRAKE FLOW EQUALIZER VALVE	126
30	AIRCRAFT DIVE FLAP SYS ACTUATING CYLINDER	58, 126
31	AIR BLEED GLOBE VALVE	128
32	ENGINE DRIVEN HYD PUMP	243
33	HYD PRESS. TRANSMITTER	132
34	HYD PRESS. SWITCH	132
35	HYD ACCUMULATOR	132
36	HYD PRESS. REGULATING VALVE	132
37	HYD LIQUID PRESS. FILTER	132
38	HYD SELECTOR VALVE (GROUND TEST)	132
39	PRESS. GAGE	132
40	HYD SPEED BRAKE SELECTOR VALVE	132
41	MECHANICAL JACKSCREW	5, 11
42	AILERON MECHANICAL HYD SERVO ASSY	11
43	AILERON SERVO CYLINDER ASSY	3, 11
44	AUTOMATIC PITCH ACTUATOR ASSY	26
45	STABILIZER POWER CONTROL SERVO ASSY	26
46	RUDDER SERVO CYLINDER ASSY	28
47	RUDDER MECHANICAL HYD SERVO ASSY	28

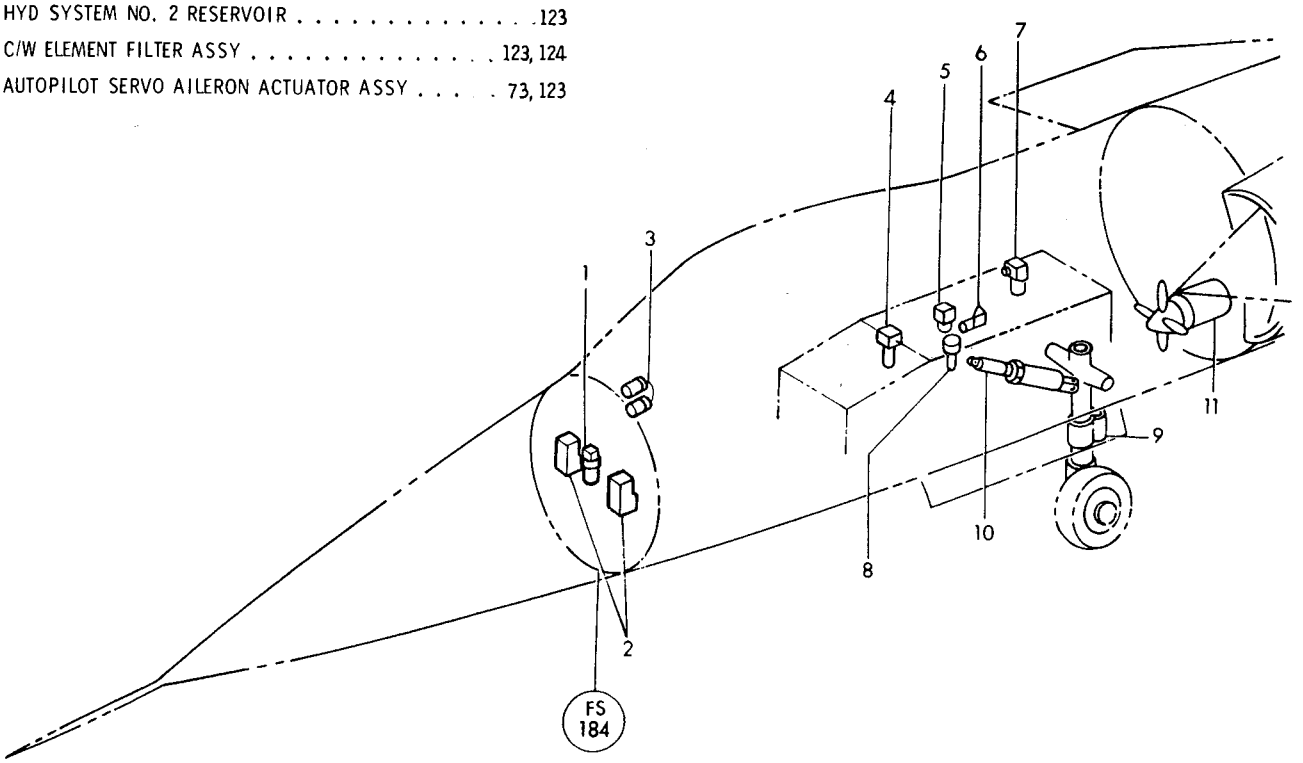

Figure 271 — Hydraulic System (Sheet 1 of 2)

Systems

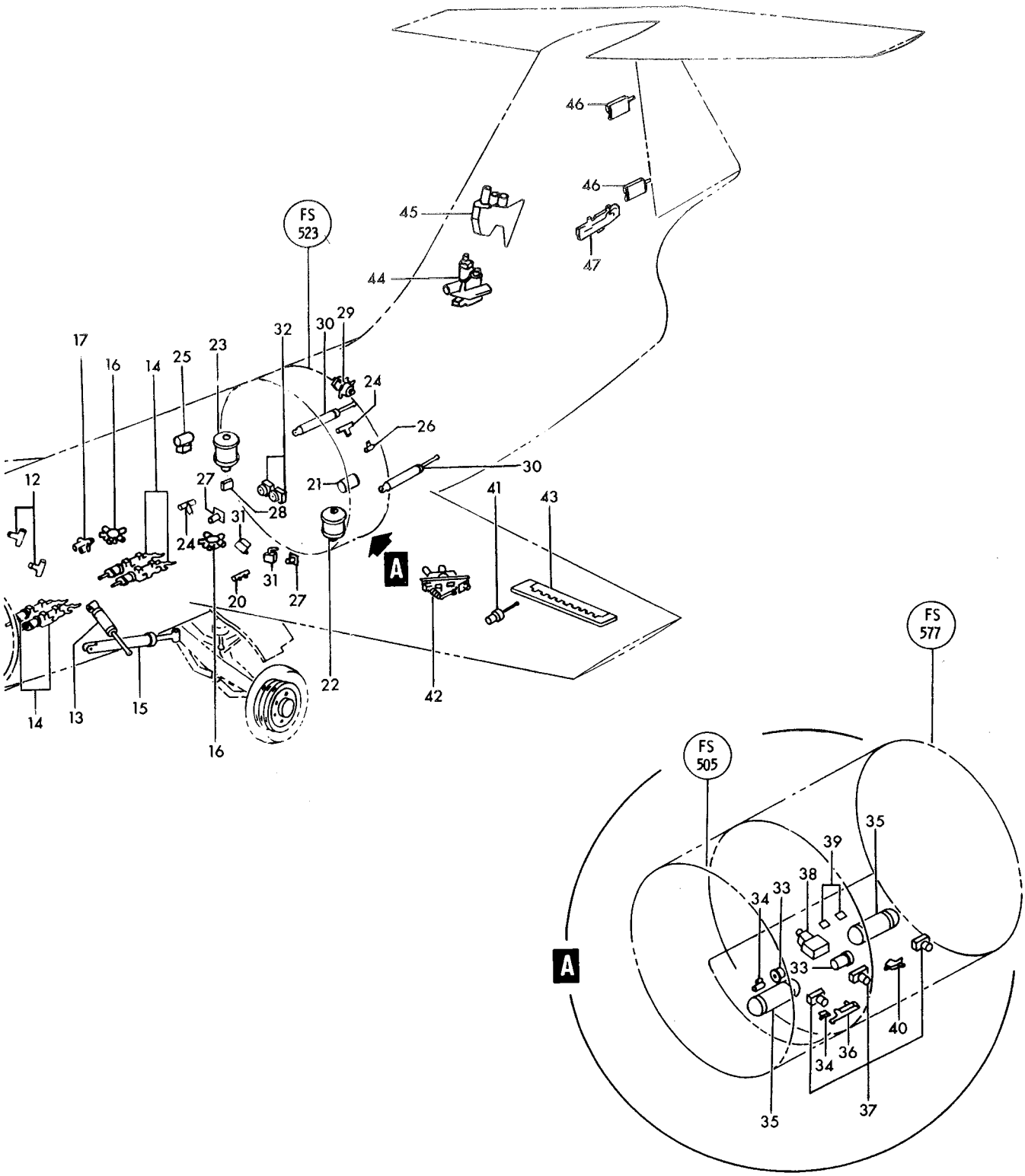

Figure 271 —Hydraulic System (Sheet 2 of 2)

Systems

INDEX	DESCRIPTION	FIGURE
1	RIGHT HAND SUB INSTRUMENT PANEL	224
2	MAIN INSTRUMENT PANEL	161, 220
3	LOWER INSTRUMENT PANEL	162, 222
4	LEFT HAND SUB INSTRUMENT PANEL	218
5	LEFT HAND CONSOLE	163
6	ELECTRICAL LOAD CENTER	173, 174, 175
7	RIGHT HAND CONSOLE	163
8	GUN CONTROL BOX	185
9	ELECTRICAL LOAD CENTER CONTROL EQUIPMENT	174
10	FATIGUE METER	188
11	NOSE LANDING GEAR TAXIING LIGHT	199
12	GUN FIRING MECHANISM	228
13	WING TIP LIGHTS	198
14	TOP AND BOTTOM FUSELAGE EXTERNAL LIGHTS	198
15	MAIN FUEL BOOST PUMPS	102
16	CENTRIFUGAL FUEL BOOST PUMP	100
17	LEFT HAND AND RIGHT HAND FUSELAGE NAVIGATION LIGHTS	198
18	FUEL PRESSURE SWITCH	102
19	AILERON MECHANICAL HYDRAULIC SERVOS	2, 11
20	LEADING EDGE FLAP ACTUATORS AND LIMIT SWITCHES	2, 16

INDEX	DESCRIPTION	FIGURE
21	MAIN LANDING GEAR DOOR SWITCH ACTUATOR	242
22	MAIN TAXIING AND LANDING LIGHTS	188, 199
23	TRAILING EDGE FLAP ACTUATORS AND LIMIT SWITCHES	2, 16
24	EXTERNAL POWER RECEPTACLE	195
25	FUEL FLOW TRANSMITTER	244
26	STABILIZER TRIM ACTUATOR MOTOR	26
27	STABILIZER MECHANICAL HYDRAULIC SERVO	26
28	TURBINE DRIVEN AC GENERATOR	244
29	OIL PRESSURE TRANSMITTER	249
30	AILERON TRIM ACTUATOR MOTOR	73
31	UPPER AND LOWER NAVIGATION LIGHTS	198
32	GUN PURGE PRESSURE SWITCH	148
33	GUN PURGE VALVE	148
34	ACTUATOR ELECTRO MECH	28
35	ANTI-SKID BRAKE GENERATOR	237
36	MAIN LANDING GEAR DOOR SWITCHES	188
37	ARRESTING HOOK LATCH	259
38	ARRESTING HOOK RELEASE	163
39	DUAL BOMB TIMER RELAYS	159

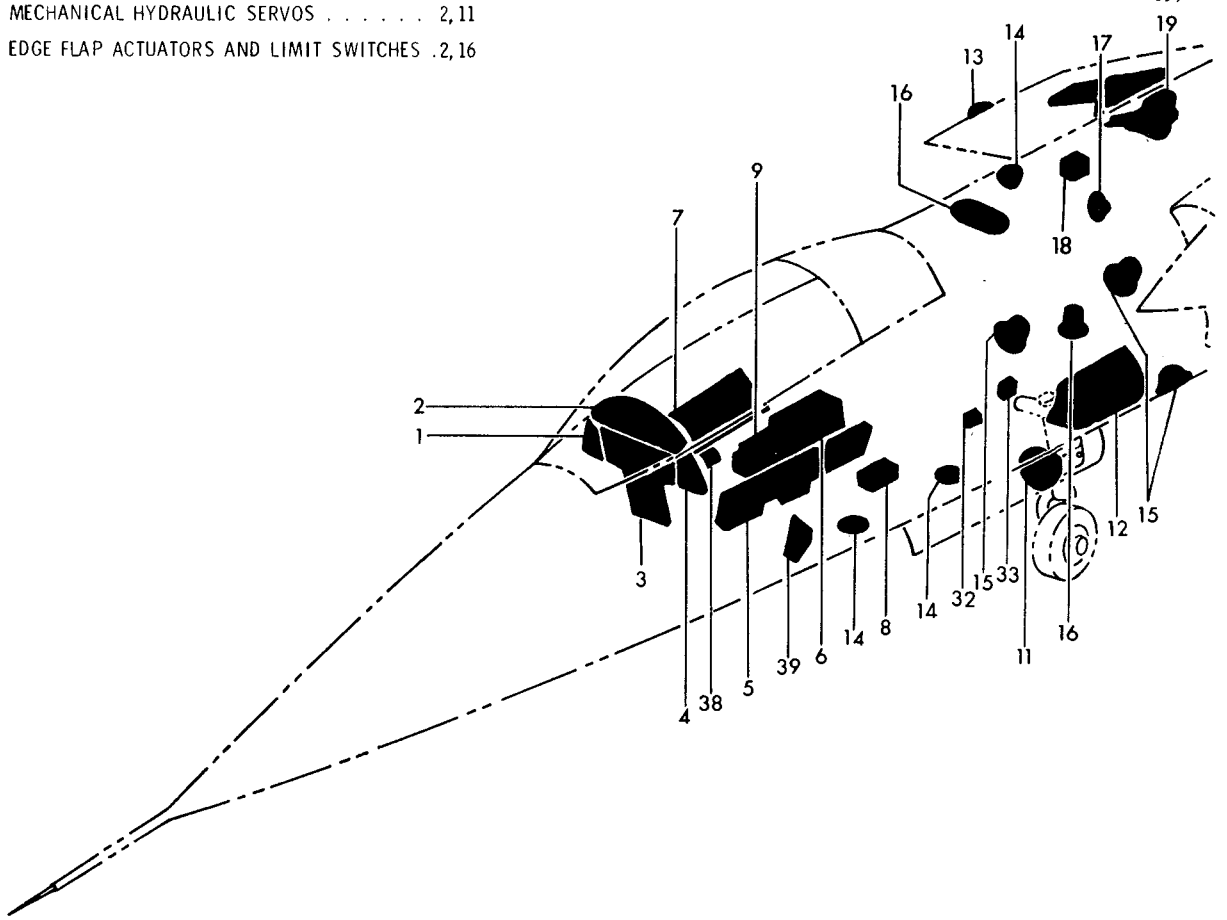

Figure 272—Electrical System (Sheet 1 of 2)

Systems

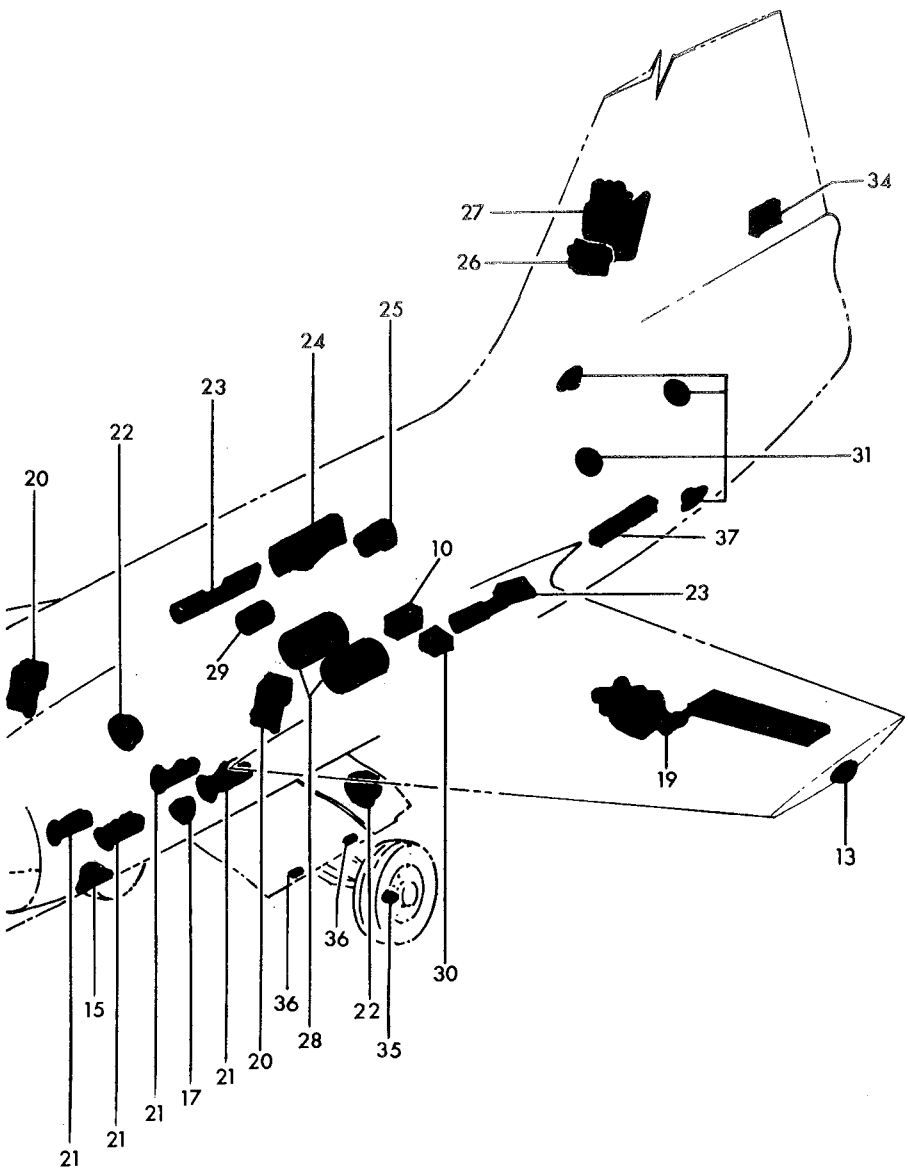

Figure 272—Electrical System (Sheet 2 of 2)

Systems

INDEX	DESCRIPTION	FIGURE
1	RELATIVE WIND TRANSDUCER	33
2	AUTOMATIC PITCH CONTROL INDICATOR	220
3	STICK SHAKER MOTOR	71
4	ELECTRONIC COMPARTMENT JUNCTION BOX	156,182
5	ELECTRONIC COMPARTMENT RACK	156, 183
6	ELECTRONIC AND CALIBRATION CONTROL AMPLIFIER	179
7	LOW VOLTAGE POWER SUPPLY	179
8	IFF RECEIVER - TRANSMITTER	179
9	TACAN RECEIVER - TRANSMITTER	179
10	AUTOMATIC FLIGHT CONTROL COMPUTER	179
11	INERTIAL NAVIGATION COMPUTER	179
12	AIR DATA COMPUTER	179
13	ARMAMENT CONTROL COMPUTER	179
15	UHF RECEIVER - TRANSMITTER	179
16	TRANSFORMER RECTIFIER	156
17	RELAY PANEL INSTL	176
18	ATTITUDE INDICATOR AMPLIFIER	178
19	ANTENNA SWITCHING UNIT	178
20	POWER SUPPLY TRANSFORMER RECTIFIER	178
21	ACCELEROMETER	178
22	AUTOMATIC PITCH CONTROL COMPUTER	178
23	INERTIAL NAVIGATION PLATFORM	178
24	INERTIAL NAVIGATION ADAPTER	178
25	IN RANGE COMPUTER	227
27	LOW PASS FILTER	181
28	RADIO FREQUENCY TRANSMISSION LINE SWITCH	181
29	ANTENNA MOUNT	181
30	ANTENNA SELECTOR	181
31	MISSILE COMPUTER ACCELEROMETER	181

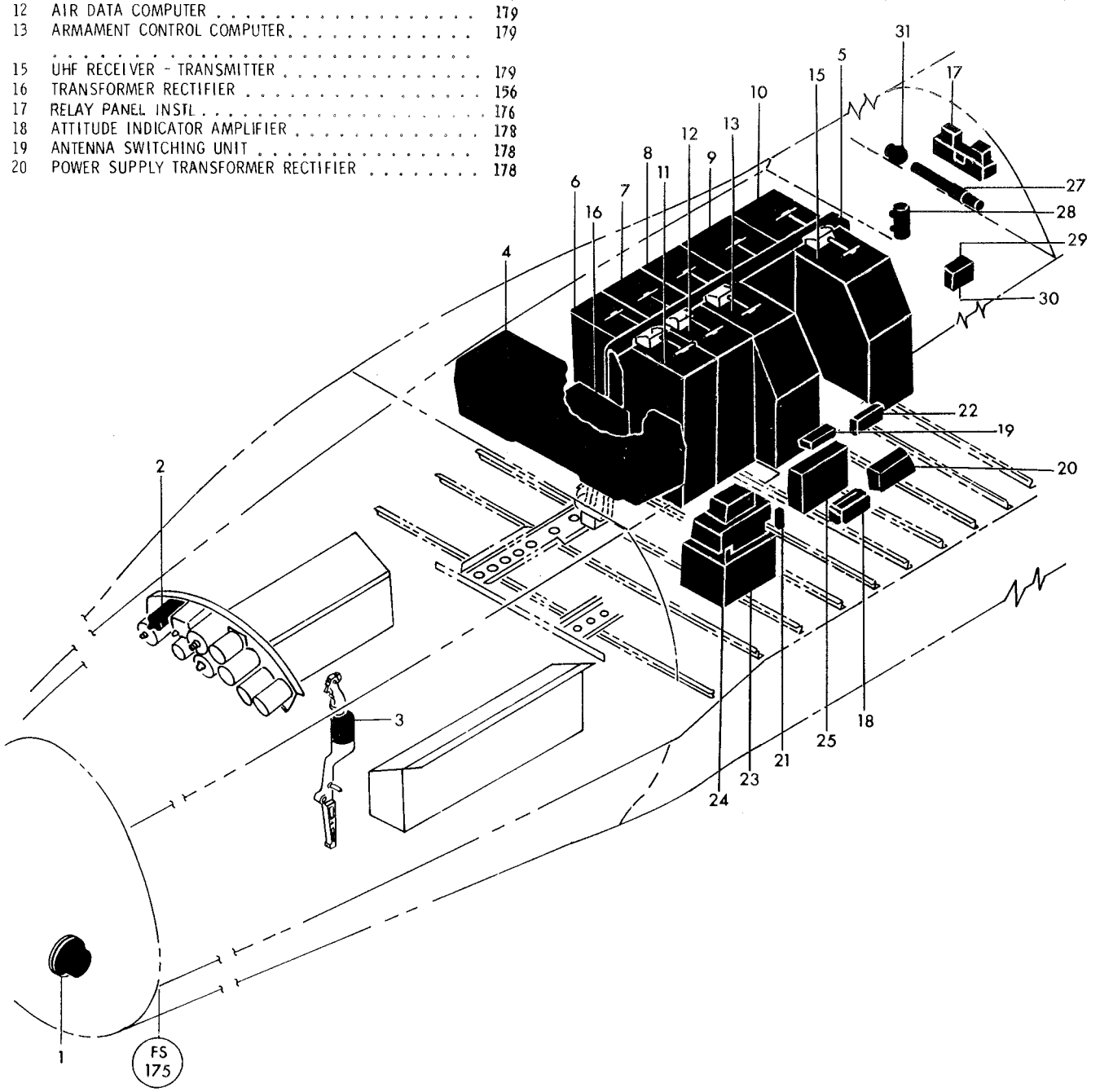

Figure 273— Electronic System

Systems

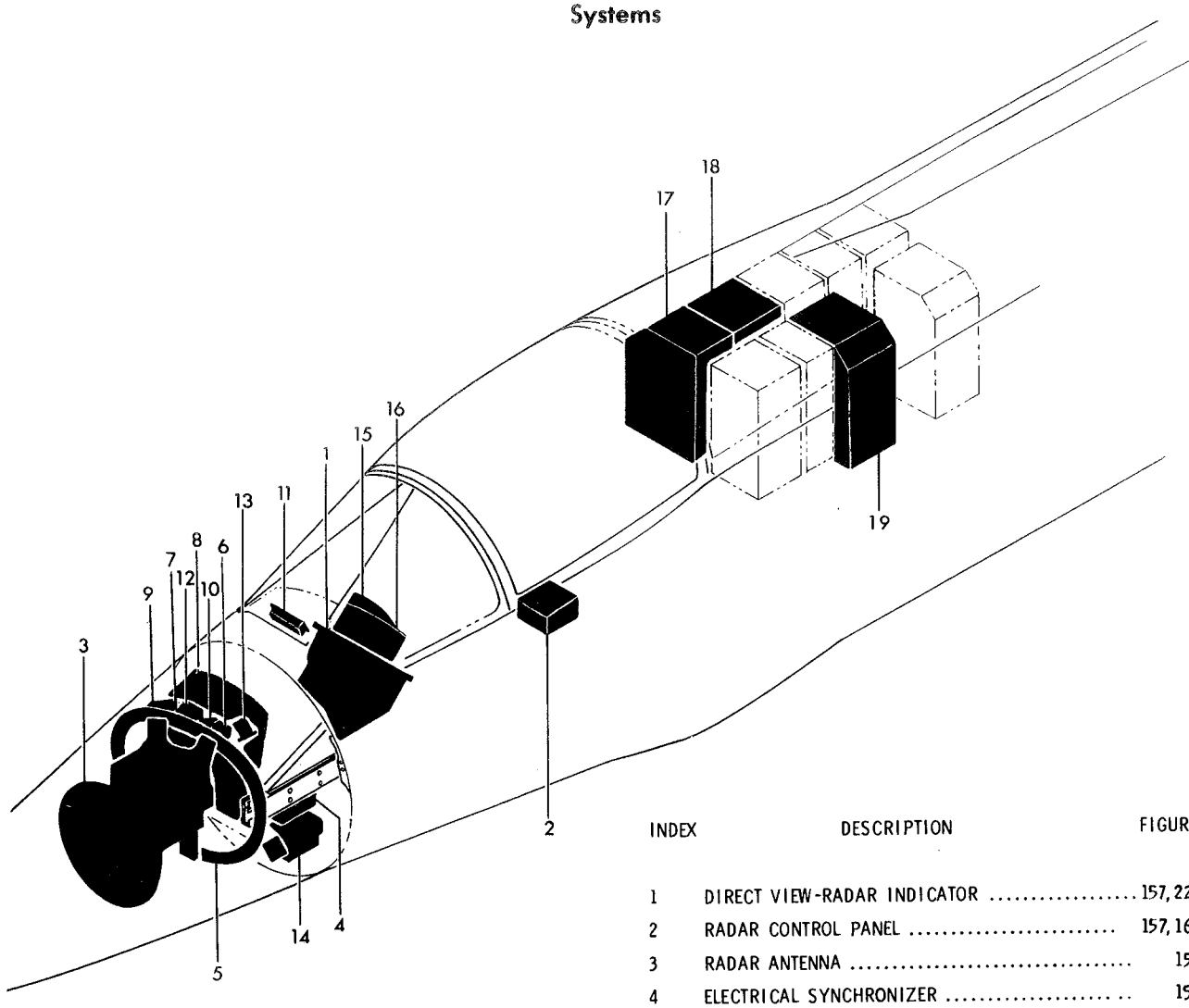

INDEX	DESCRIPTION	FIGURE
1	DIRECT VIEW-RADAR INDICATOR	157, 222
2	RADAR CONTROL PANEL	157, 163
3	RADAR ANTENNA	157
4	ELECTRICAL SYNCHRONIZER	157
5	ANTENNA & EQUIPMENT MOUNT	157
6	LOAD FERRITE ISOLATOR	157
7	AUTOMATIC FREQUENCY CONTROL	157
8	RADAR TRANSMITTER	157
9	WAVEGUIDE COUPLER	157
10	FLEXIBLE WAVEGUIDE	157
11	CLEARANCE PLANE AND ANTENNA TILT INDICATOR	157, 222
12	WAVEGUIDE SWITCH	157
13	DUMMY LOAD	157
14	INTERMEDIATE FREQUENCY POST AMPLIFIER	157
15	RADAR VISOR-INDICATOR	260
16	RADAR FILTER-INDICATOR	260
17	ELECTRONIC AND CALIBRATION CONTROL AMPLIFIER	179
18	LOW VOLTAGE POWER SUPPLY	179
19	ARMAMENT CONTROL COMPUTER	179

Figure 274—R21G NASARR System

Systems

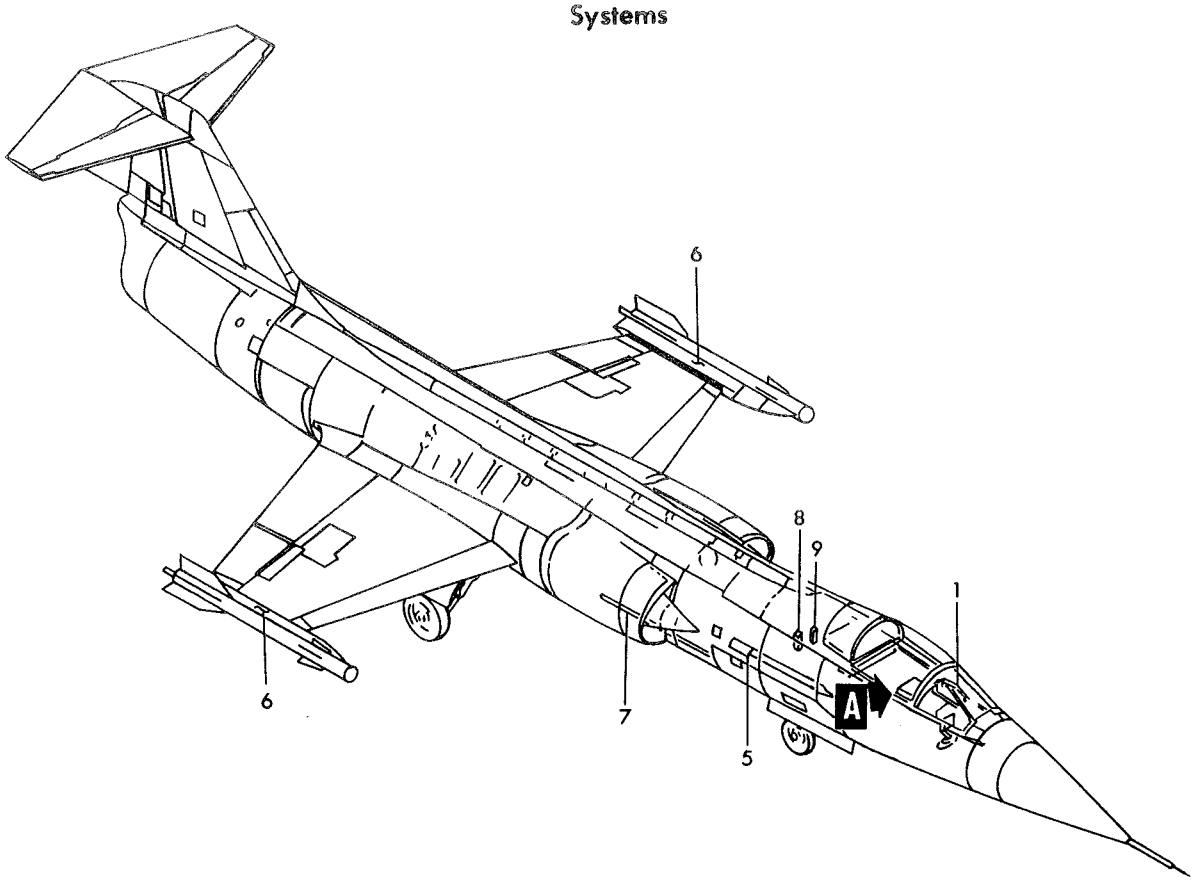

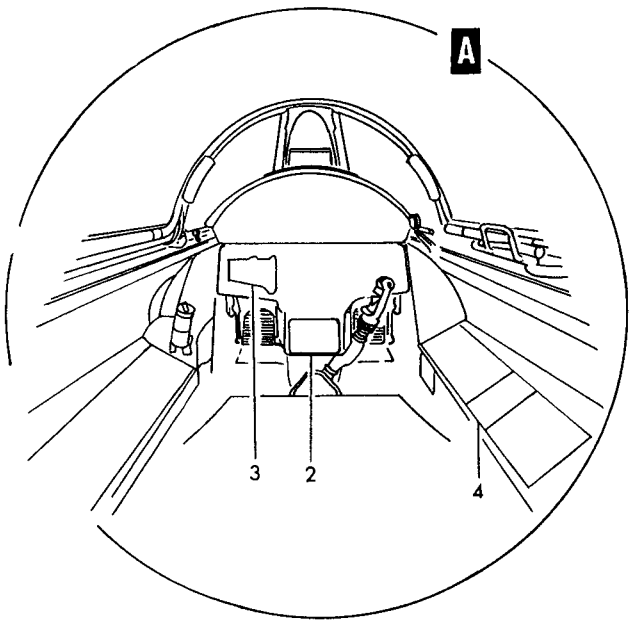

INDEX	DESCRIPTION	FIGURE
1	OPTICAL GUNSIGHT	227
2	SPECIAL WEAPON CONTROL PANEL	163,222,223
3	ARMAMENT CONTROL PANEL	222
4	M2 BOMB CONTROL PANEL	163
5	AUTOMATIC 20MM GUN	228
6	LAUNCHER	260
7	EJECTOR RACK	260
8	M2 BOMB RELEASE COMPUTER	179
9	ARMAMENT CONTROL COMPUTER	179

Figure 275 — Armament System

Systems

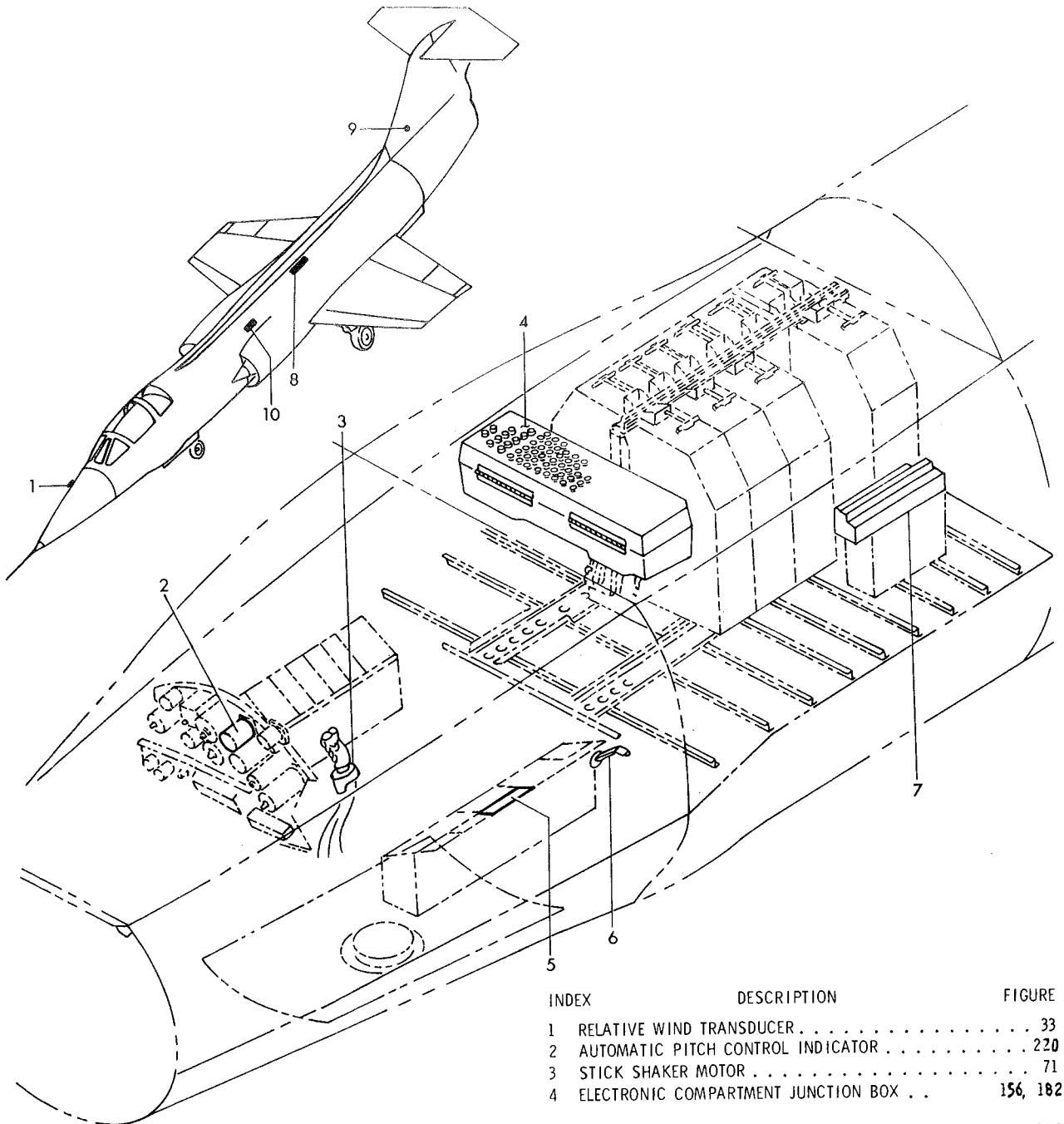

INDEX	DESCRIPTION	FIGURE
1	RELATIVE WIND TRANSDUCER	33
2	AUTOMATIC PITCH CONTROL INDICATOR	220
3	STICK SHAKER MOTOR	71
4	ELECTRONIC COMPARTMENT JUNCTION BOX	156, 182
5	TRIM CONTROL PANEL	163, 167
6	RELATIVE WIND TRANSDUCER	214
7	AUTOMATIC PITCH CONTROL COMPUTER	178
8	AUTOMATIC PITCH CONTROL JUNCTION BOX	193
9	AUTOMATIC PITCH CONTROL ACTUATOR	26
10	AUTOMATIC PITCH CONTROL RATE GYRO	193

Figure 276— Automatic Pitch Control System

Systems

INDEX	DESCRIPTION	FIGURE
1	INERTIAL NAVIGATION ALIGNMENT CONTROL	163
2	INERTIAL NAVIGATION CONTROL	163
3	INERTIAL NAVIGATOR ADAPTER	178
4	INSULATING BLANKET	178
5	INERTIAL NAVIGATOR PLATFORM	178
6	INERTIAL NAVIGATOR COMPUTER	179

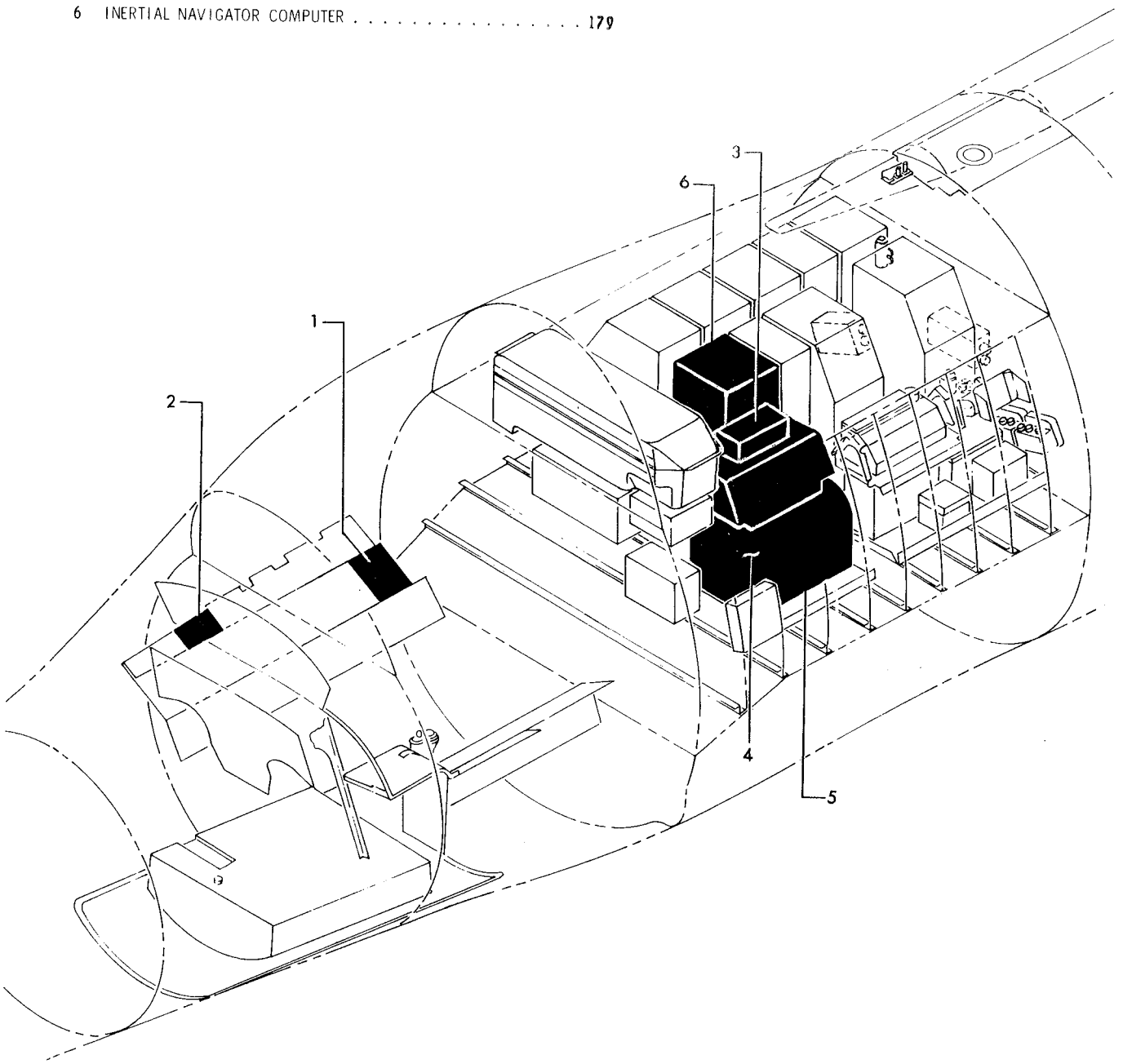

Figure 277— Inertial Navigation System

Systems

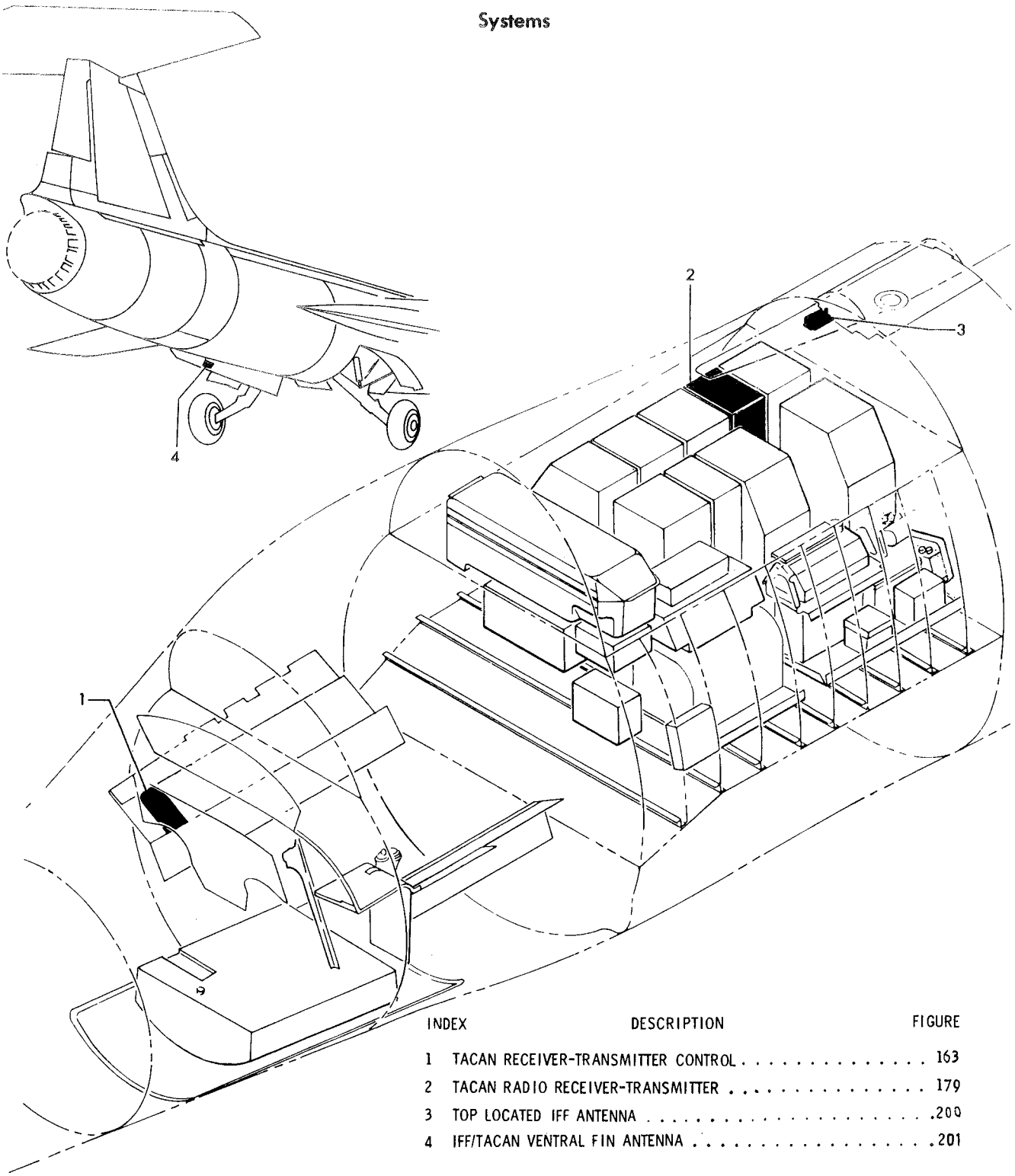

INDEX	DESCRIPTION	FIGURE
1	TACAN RECEIVER-TRANSMITTER CONTROL	163
2	TACAN RADIO RECEIVER-TRANSMITTER	179
3	TOP LOCATED IFF ANTENNA	200
4	IFF/TACAN VENTRAL FIN ANTENNA	201

Figure 278—TACAN System

Systems

INDEX	DESCRIPTION	FIGURE
1	POSITION HOMING INDICATOR	220
2	PHI NAVIGATION CONTROL	163
3	PHI SYSTEM STATION SELECTOR	163
4	PHI NAVIGATION COMPUTER	176
5	C2G COMPASS CONTROL	163
6	INERTIAL NAVIGATOR ADAPTER	178
7	C2G DIRECTIONAL GYRO COMPASS AMPLIFIER	178
8	C2G POWER CONVERTER TRANSFORMER	178
9	MAGNETIC AZIMUTH DETECTOR	197

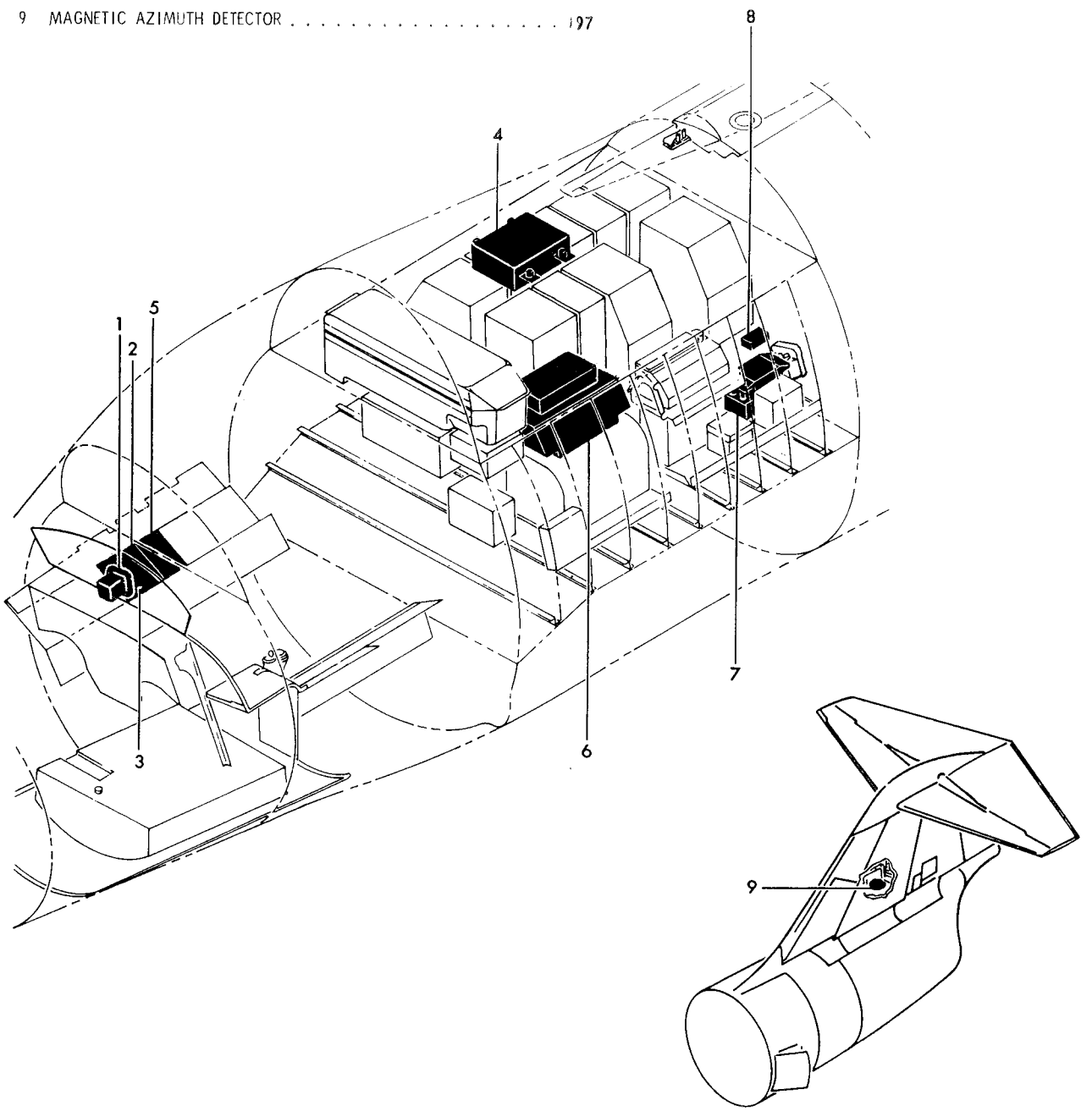

Figure 279— PHI Navigation and C2G Standby Gyrosyn Compass System

Systems

INDEX	DESCRIPTION	FIGURE
1	CHANNEL SELECTOR SWITCH	220
2	UHF RADIO RECEIVER-TRANSMITTER	179
4	LOW PASS FILTER	181
5	TOP UHF ANTENNA	200
6	RADIO FREQUENCY LINE SWITCH	181
7	ANTENNA SELECTOR	181
8	UHF RECEIVER-TRANSMITTER CONTROL PANEL	163
9	UHF EMERGENCY RECEIVER-TRANSMITTER	163
10	UHF ANTENNA (BOTTOM)	201

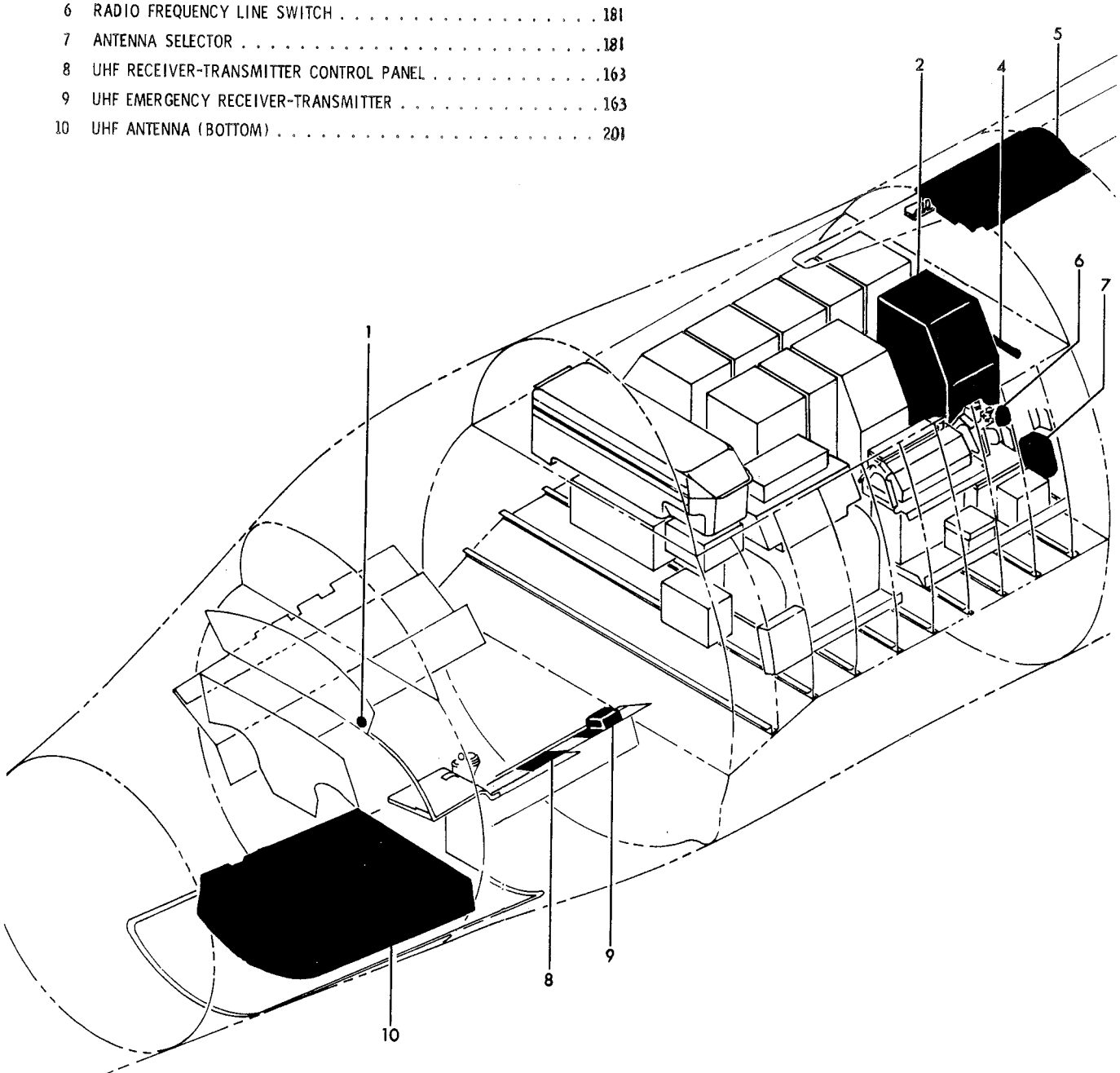

Figure 280— UHF Communication System

Systems

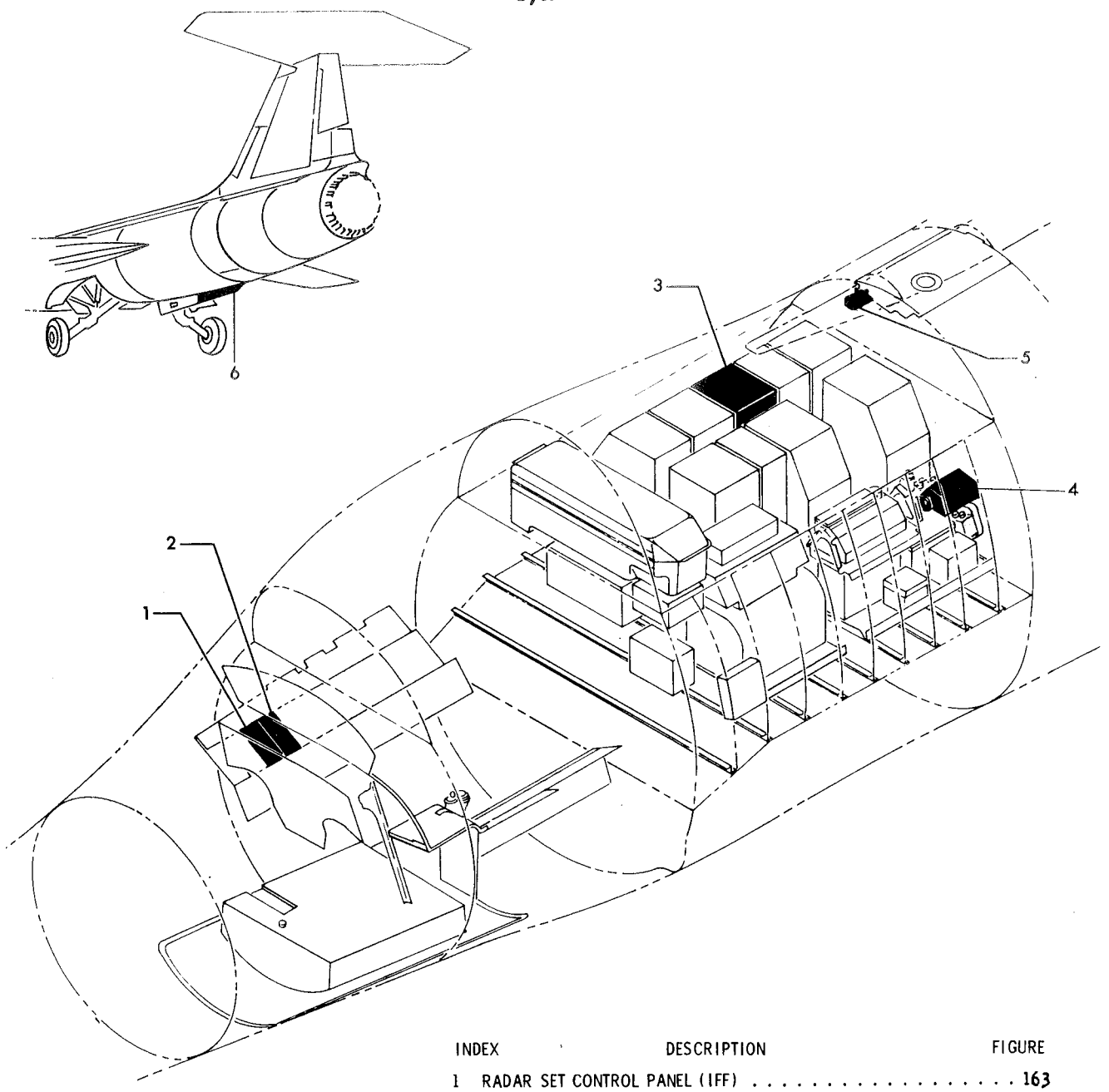

INDEX	DESCRIPTION	FIGURE
1	RADAR SET CONTROL PANEL (IFF)	163
2	CODER GROUP CONTROL (SIF)	163
3	IFF RADIO RECEIVER-TRANSMITTER	179
4	ANTENNA SWITCH UNIT	178
5	TOP LOCATED IFF ANTENNA	200
6	IFF/TACAN VENTRAL FIN ANTENNA	201

Figure 281 — IFF Radar System

Systems

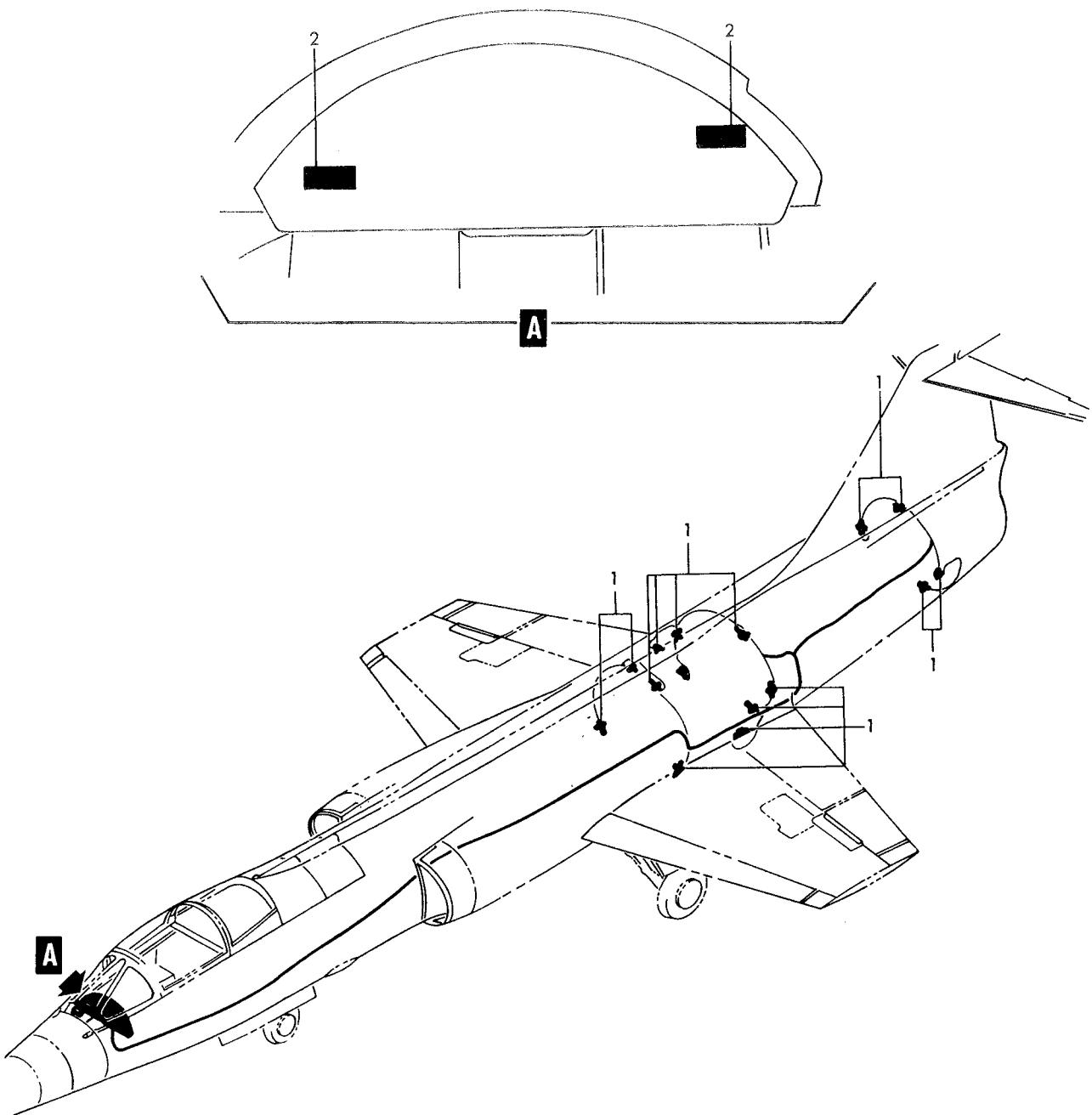

INDEX	DESCRIPTION	FIGURE
1	FIRE DETECTOR	196
2	FIRE WARNING LIGHT	220

Figure 282 — Fire Detector System

Systems

INDEX	DESCRIPTION	FIG. NO.
1	AIR CHECK VALVE	139
2	SELF REGENERATING DESICCANT DEHYDRATOR	138
3	AIR CHECK VALVE	138
4	NASARR COOLING AIR BYPASS VALVE	137
5	ABSOLUTE PRESSURE REGULATOR	138
6	AIR PRESSURE RELIEF VALVE	138
7	AIR PRESSURE REGULATOR	137
8	PILOTS DEFOGGING CONTROLLER	141
9	SOLENOID HOT AIR SHUTOFF VALVE	149
10	CABIN AIR SAFETY VALVE	145
11	MANUALLY OPERATED SHUTOFF PLUG VALVE	145
12	GUN GAS PURGE RESTRICTOR VALVE	147
13	MAXIMUM TEMPERATURE SWITCH	144
14	TEMPERATURE SENSOR	144
15	COMPLETE WITH BYPASS VALVE SEPARATOR	144
16	ELECTRONIC COMPT COOLING AIR CONTROL VALVE	144
17	GUN PURGE ACTUATING CYLINDER	147
18	AIR PRESSURE REGULATING SOLENOID VALVE	139
19	AIR CONDITIONING PACKAGE	154

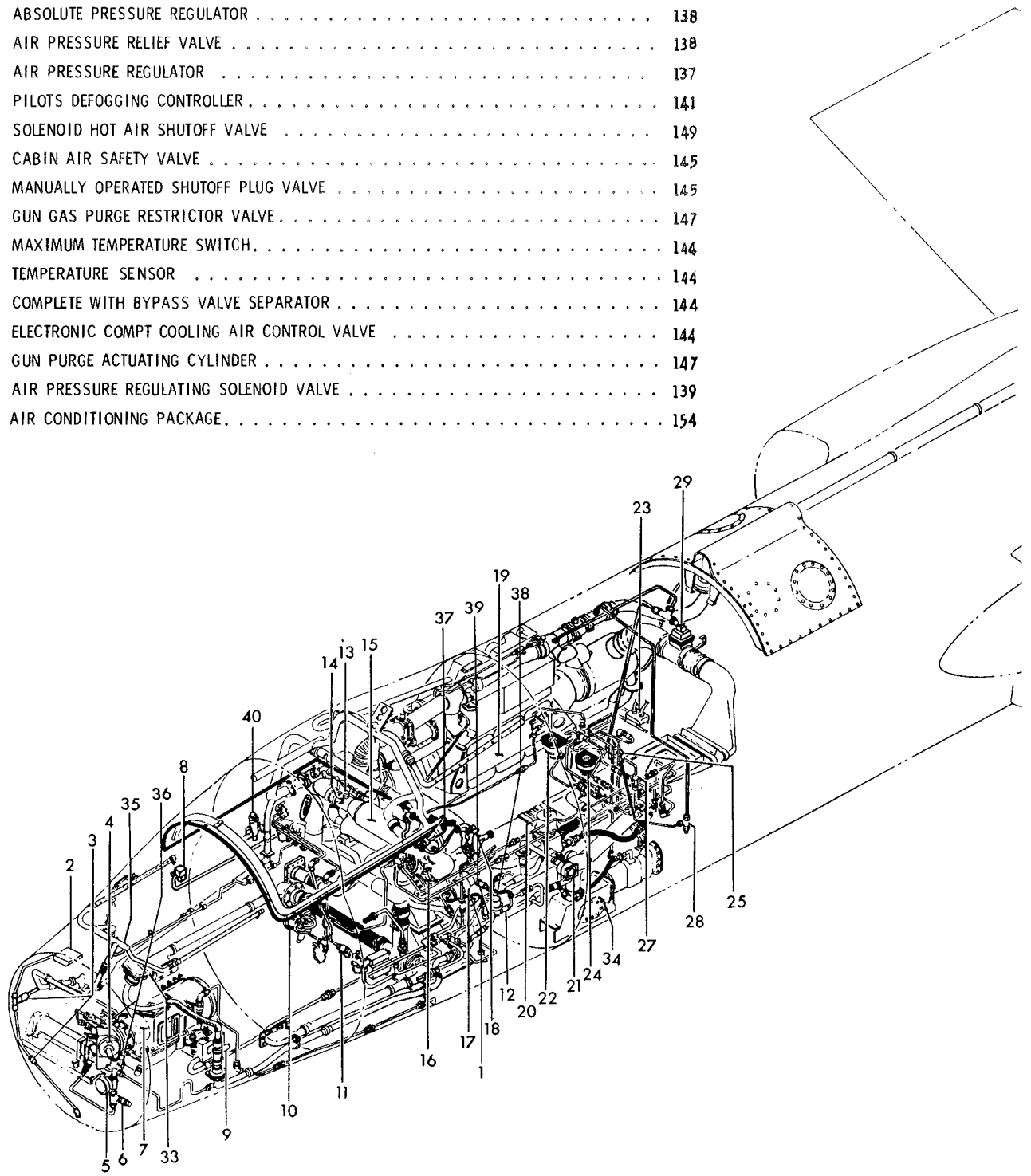

Figure 283—Air Conditioning System (Sheet 1 of 2)

Systems

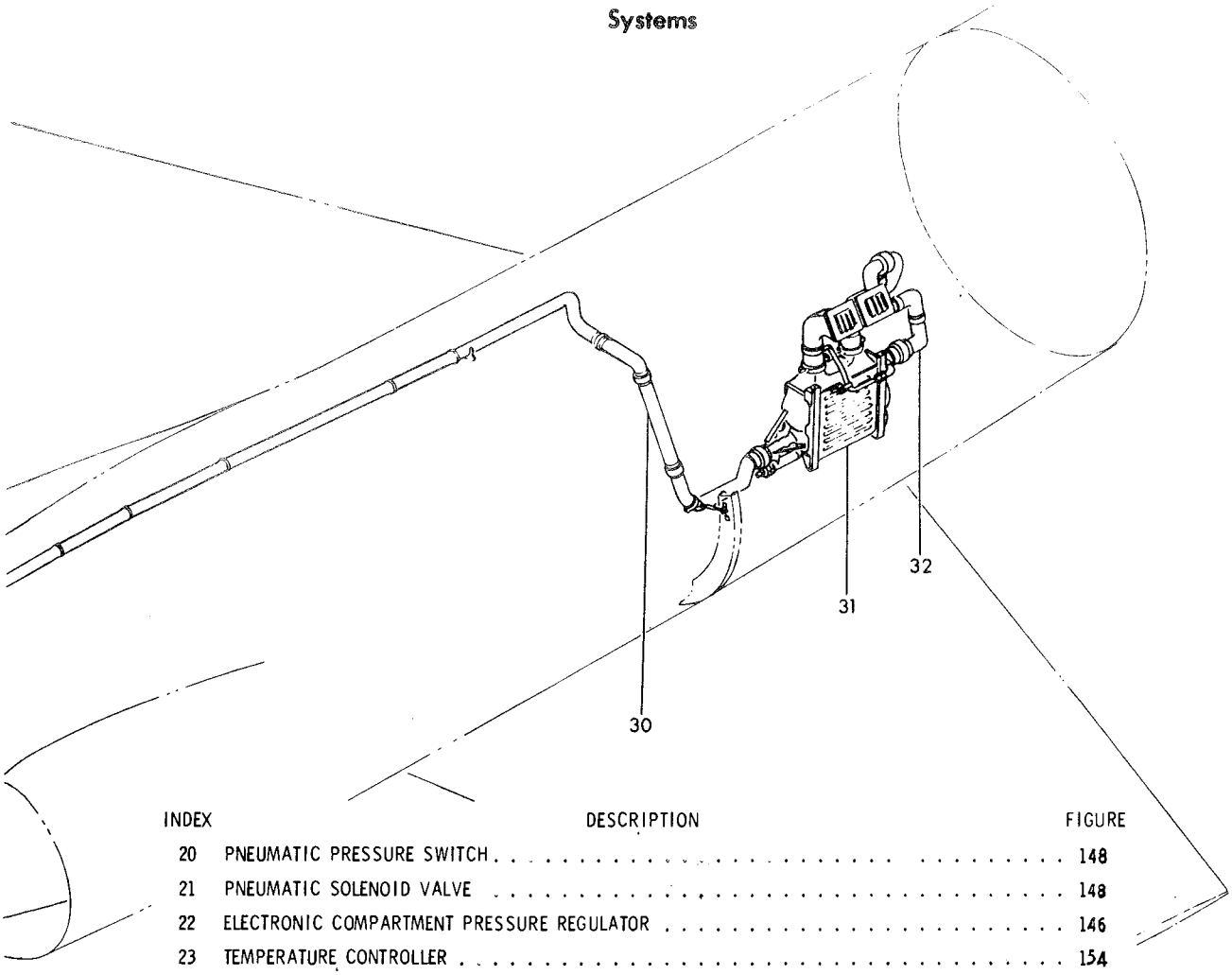

INDEX	DESCRIPTION	FIGURE
20	PNEUMATIC PRESSURE SWITCH	148
21	PNEUMATIC SOLENOID VALVE	148
22	ELECTRONIC COMPARTMENT PRESSURE REGULATOR	146
23	TEMPERATURE CONTROLLER	154
24	ELECTRONIC COMPARTMENT SAFETY VALVE	146
25	PNEUMATIC PRESSURE SWITCH	151
27	MANUALLY OPERATED SHUTOFF PLUG VALVE	146
28	ELECTRONIC COMPARTMENT REGULATING VALVE PUMP ASSEMBLY	146
29	AIR SHUTOFF PNEUMATIC VALVE	151
30	TENSION TIE ROD BELLOWS ASSEMBLY	153
31	PRIMARY HEAT EXCHANGER	153
32	TENSION TIE ROD BELLOWS ASSEMBLY	153
33	RAIN REMOVER HOUSING ASSEMBLY	149
34	GUN GAS PURGE BOX ASSEMBLY	148
35	WINDSHIELD DEFOGGING DUCT ASSEMBLY	141
36	CABIN TEMPERATURE PICKUP	137
37	PNEUMATIC SOLENOID NORMALLY CLOSED VALVE	139
38	GUN GAS PURGE DEHYDRATOR	147
39	GUN GAS PURGE RELIEF VALVE	147
40	ANTI-G VALVE	140

Figure 283— Air Conditioning System (Sheet 2 of 2)

Systems

INDEX	DESCRIPTION	FIGURE
1	CONTROL STICK AND GRIP ASSEMBLY	71
2	RUDDER AND BRAKE PEDALS	64, 65
3	AILERON CONTROL QUADRANT	68
4	THROTTLE CONTROL LEVER	78
5	ENGINE CONTROL	82
6	NOSE LANDING GEAR STEERING CONTROLS	235, 236
7	NOSE LANDING GEAR STEERING DAMPER ASSEMBLY	236
8	FS 209 PULLEY BRACKET ASSEMBLIES	83
9	FS 249 PULLEY BRACKET ASSEMBLIES	83
10	FS 258 PULLEY BRACKET ASSEMBLIES	83
11	FS 335 TUNNEL AND BELLCRANK ASSEMBLIES	84
12	AILERON TORQUE TUBES	73
13	AILERON SERVO ACTUATING PUSH ROD	11
14	AILERON MECHANICAL HYDRAULIC SERVOS	11
15	AILERON SERVO CYLINDERS	11
16	AILERON TRIM ACTUATOR	74

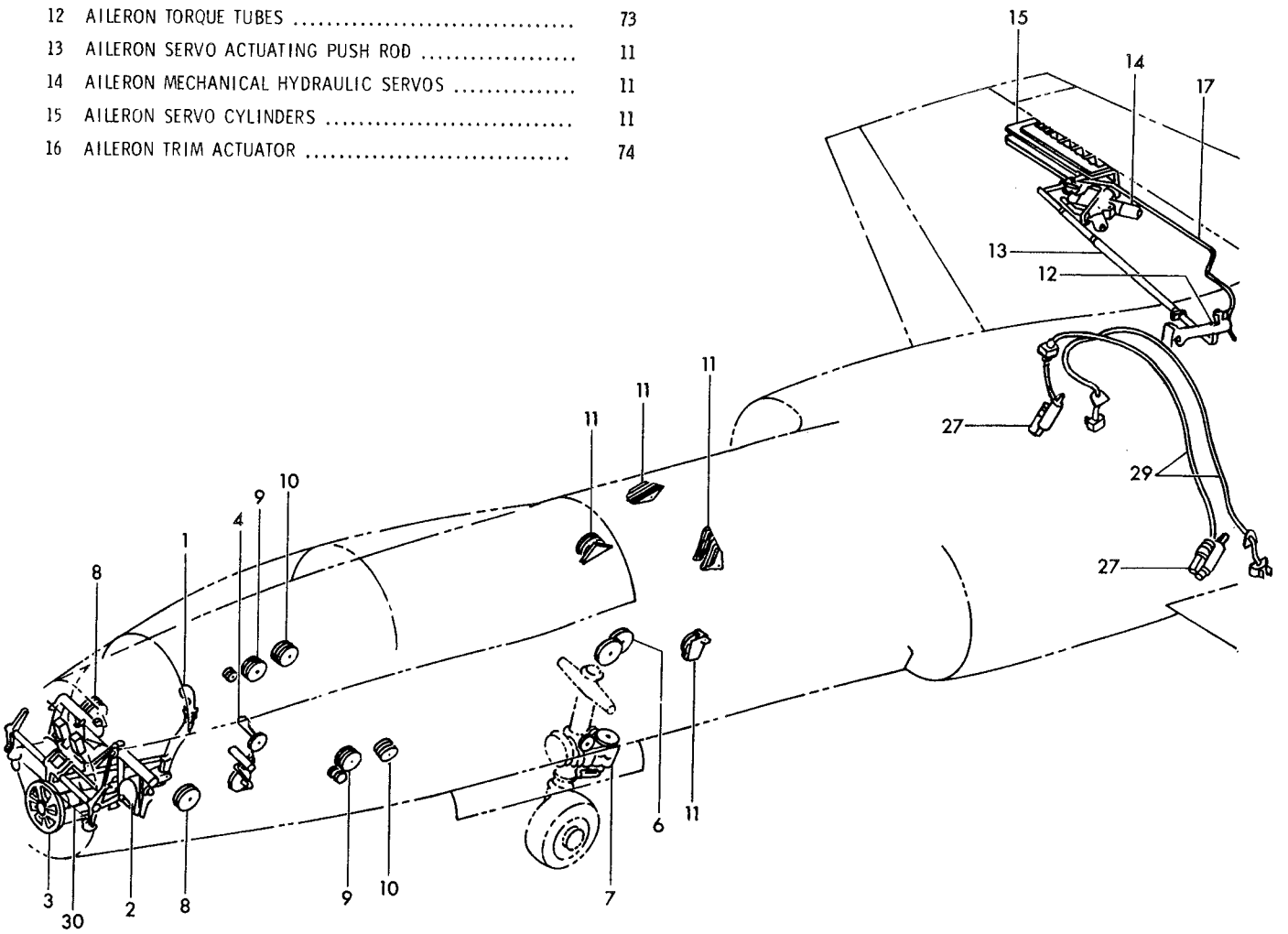

Figure 284— Flight Controls System (Sheet 1 of 2)

Systems

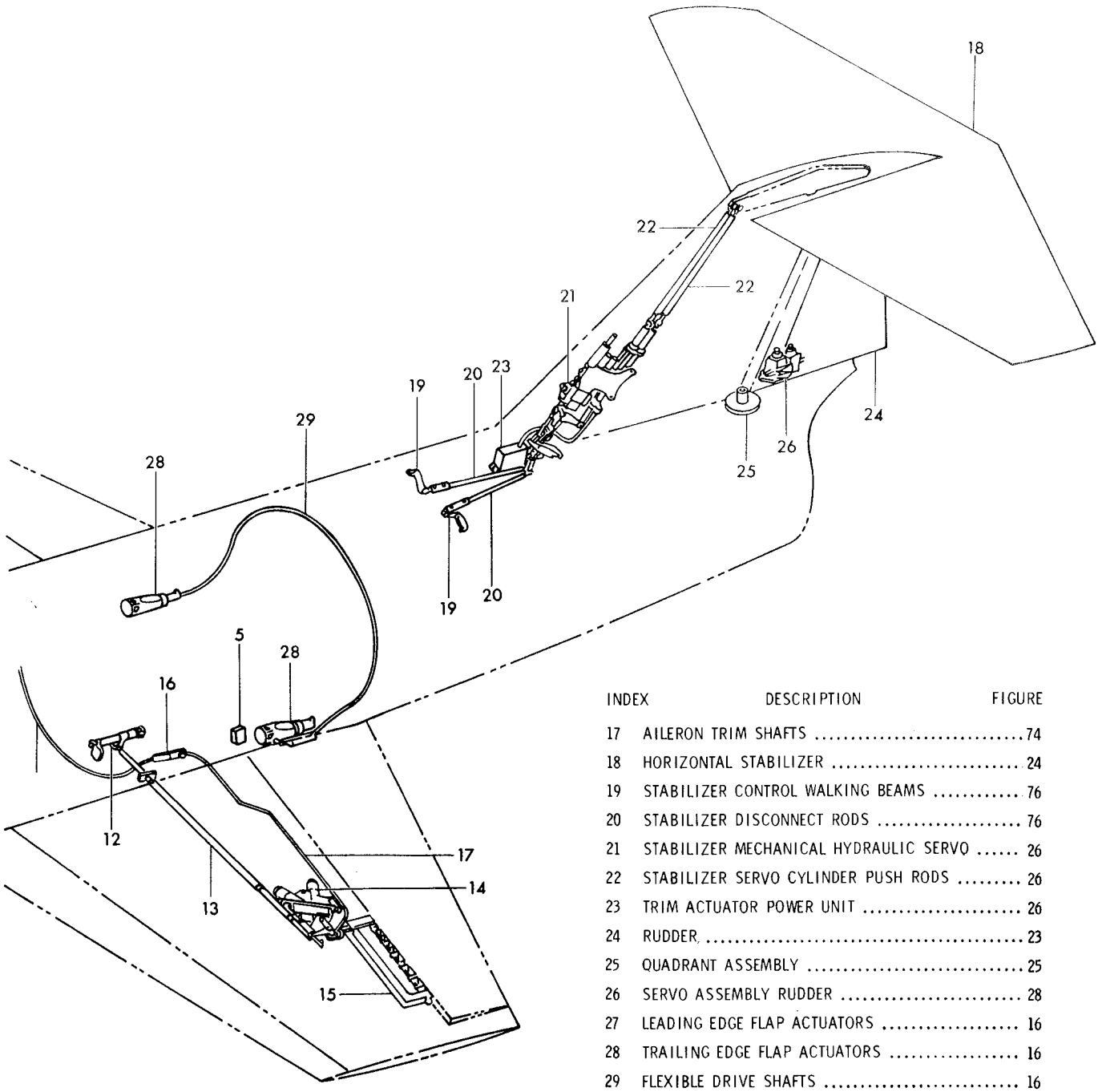

INDEX	DESCRIPTION	FIGURE
17	AILERON TRIM SHAFTS	74
18	HORIZONTAL STABILIZER	24
19	STABILIZER CONTROL WALKING BEAMS	76
20	STABILIZER DISCONNECT RODS	76
21	STABILIZER MECHANICAL HYDRAULIC SERVO	26
22	STABILIZER SERVO CYLINDER PUSH RODS	26
23	TRIM ACTUATOR POWER UNIT	26
24	RUDDER	23
25	QUADRANT ASSEMBLY	25
26	SERVO ASSEMBLY RUDDER	28
27	LEADING EDGE FLAP ACTUATORS	16
28	TRAILING EDGE FLAP ACTUATORS	16
29	FLEXIBLE DRIVE SHAFTS	16
30	AILERON TRAVEL LIMITER	70

Figure 284 — Flight Controls System (Sheet 2 of 2)

Systems

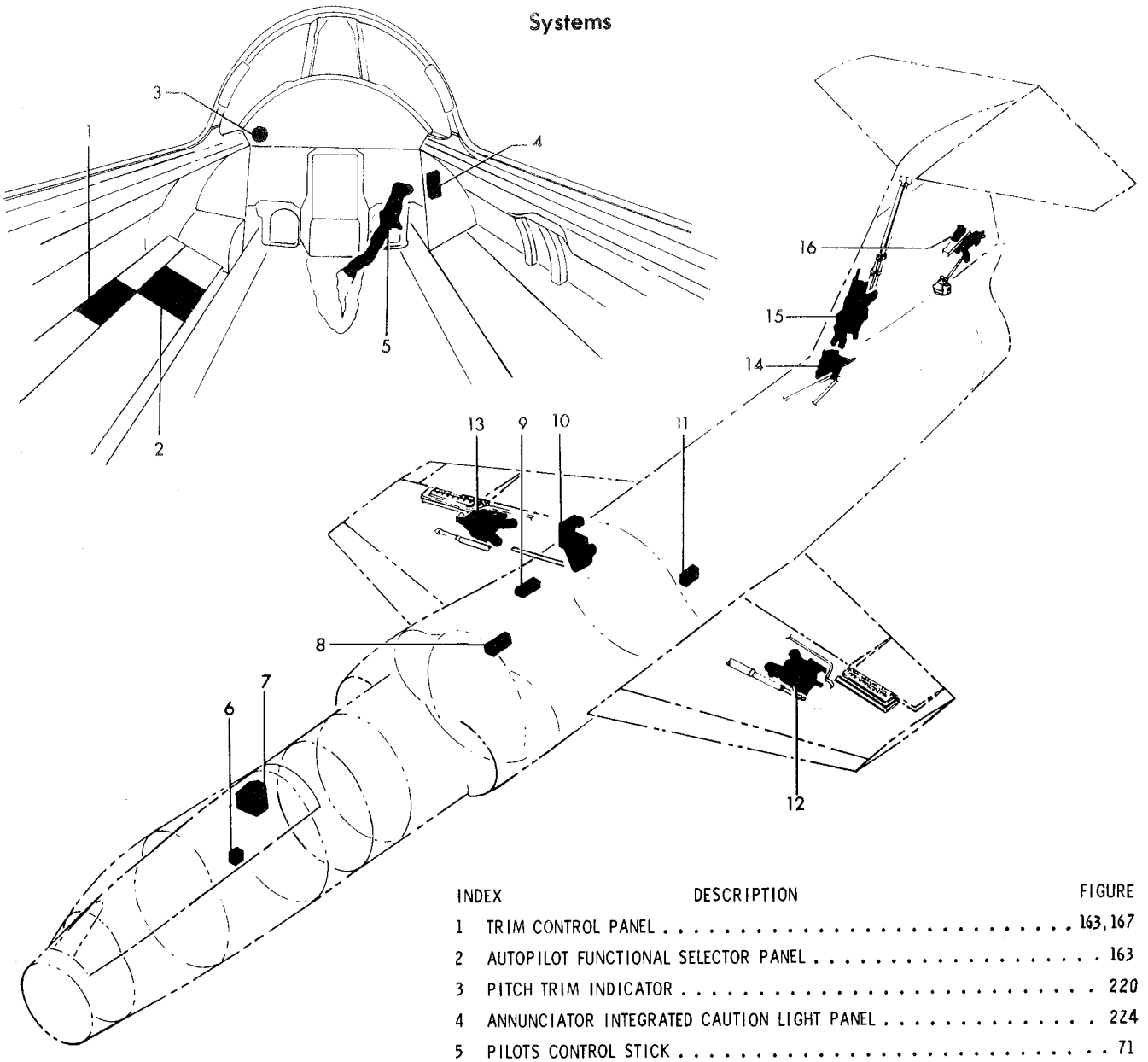

INDEX	DESCRIPTION	FIGURE
1	TRIM CONTROL PANEL	163, 167
2	AUTOPILOT FUNCTIONAL SELECTOR PANEL	163
3	PITCH TRIM INDICATOR	220
4	ANNUNCIATOR INTEGRATED CAUTION LIGHT PANEL	224
5	PILOTS CONTROL STICK	71
6	NORMAL ACCELEROMETER	178
7	AFC SYSTEM COMPUTER	179
8	TWO AXIS RATE GYRO GROUP	193
9	ROLL RATE GYRO GROUP	186
10	AUTOPILOT AILERON ACTUATOR	123
11	HYDRAULIC PRESSURE AUTOPILOT SWITCH	132
12	LEFT AILERON MECHANICAL HYDRAULIC SERVO	11
13	RIGHT AILERON MECHANICAL HYDRAULIC SERVO	11
14	AUTOPILOT STABILIZER SERVO ACTUATOR	26
15	STABILIZER POWER CONTROL SERVO	26
16	RUDDER SERVO MECHANICAL HYDRAULIC ASSEMBLY	28

Figure 285 — Stability Augmentation and Autopilot System